Installation and operating instructions

MTS

Model D screw pumps

GRUNDFOS

MTS

English (US)

Installation and operating instructions 4
Appendix A. 30
China RoHS 31
EU declaration of conformity 32
UK declaration of conformity 34
Operation manual EAC 35

Original installation and operating instructions

Table of contents

1. General information 4
1.1 Hazard statements 4
1.2 Notes 4
1.3 Safety 5

2. Product introduction 6
2.1 Intended use 6
2.2 Identification. 6
2.3 Applications 7
2.4 Pumped liquids 7

3. Receiving the product. 8
3.1 Inspecting the product 8
3.2 Handling and lifting the product 8

4. Installing the product 8
4.1 General precautions 8
4.2 Electrical connection 14

5. Starting up the product 15
5.1 First start-up. 15

6. Storing the product 16
6.1 Preparation for storage 16
6.2 Storage 16
6.3 Removing corrosion inhibitor 16

7. Technical data 17
7.1 Operating conditions 17

8. Taking the product out of operation 19

9. Starting up after standstill 20
9.1 Test run of the standby pump (if installed) . . 20

10. Servicing the product 20
10.1 Maintaining the product. 20
10.2 Repairing the product. 21
10.3 Ordering spare parts 21
10.4 Position numbers 21
10.5 Constructional drawings 23
10.6 Returning the pump to the manufacturer . . 25
10.7 Service documentation 25

11. Fault finding 25
11.1 The pump is not pumping. 25
11.2 The pump performance is insufficient. 26
11.3 The pump performance is excessive. 26
11.4 There is no inlet pressure. 27
11.5 The pump operation is unstable, there are jerks and noise. 27
11.6 The pump is jammed. 28
11.7 The pump is leaking. 28
11.8 The motor power input is excessive. 28

12. Disposing of the product 29

13. Document quality feedback 29

1. General information

Read this document before you install the product. Installation and operation must comply with local regulations and accepted codes of good practice.

1.1 Hazard statements

The symbols and hazard statements below may appear in Grundfos installation and operating instructions, safety instructions and service instructions.

DANGER
Indicates a hazardous situation which, if not avoided, will result in death or serious personal injury.

WARNING
Indicates a hazardous situation which, if not avoided, could result in death or serious personal injury.

CAUTION
Indicates a hazardous situation which, if not avoided, could result in minor or moderate personal injury.

The hazard statements are structured in the following way:

SIGNAL WORD
Description of the hazard
Consequence of ignoring the warning
- Action to avoid the hazard.

1.2 Notes

The symbols and notes below may appear in Grundfos installation and operating instructions, safety instructions and service instructions.

Observe these instructions for explosion-proof products.

A blue or gray circle with a white graphical symbol indicates that an action must be taken.

A red or gray circle with a diagonal bar, possibly with a black graphical symbol, indicates that an action must not be taken or must be stopped.

If these instructions are not observed, it may result in malfunction or damage to the equipment.

Tips and advice that make the work easier.

1.3 Safety

The manufacturer does not accept any liability for damage caused by disregarding the documentation.

1.3.1 General safety instructions

Observe the following regulations before carrying out any work.

Product safety

The pump has been designed according to the latest technology and recognised technical safety regulations. Nevertheless, the operation of the pump can still put the life and health of the user or third party at risk or cause damage to the pump or other property.

- Only operate the pump if it is in perfect technical condition, and only use it as intended, continuously paying attention to safety and risks and complying with the instructions in these installation and operating instructions.
- Keep these installation and operating instructions and all other applicable documents complete, legible and accessible to persons at all times.
- Keep the information on the pump in a complete and legible condition.
- In the event of any safety-related malfunctions, switch off the pump immediately and have the malfunction corrected by qualified persons.
- In addition to the safety instructions given in these installation and operating instructions, comply with statutory or other safety and accident-prevention regulations as well as standards and guidelines applying in the country where the pump is operated.

Obligations of the operating company

Safety-conscious operation:

- Only operate the pump if it is in perfect technical condition, and only use it as intended. See the section on operating conditions.
- Make sure that the following safety regulations are observed:
  - statutory or other safety and accident-prevention regulations
  - safety regulations governing the handling of hazardous substances
  - relevant standards and guidelines applying in the country where the pump is operated.
- Make personal protective equipment available.
- Make sure that all persons working on the pump have read and understood these installation and operating instructions and all other applicable documents, especially the safety, maintenance and repair information, before they start any work.
- Organise responsibilities, areas of competence and the supervision of persons.
- Make sure that the following activities are carried out by specialist technicians only:
  - fitting, repair and maintenance
  - work on the electrical system.
- Make sure that trainee persons only work on the pump under supervision of specialist technicians.

Safety equipment:

- Provide the following safety equipment, and make sure it is in working condition:
  - guards protecting against hot, cold or moving parts
  - appropriate earthing protecting against possible building-up of electrostatic charge
  - appropriate safety valve on the outlet side between the pump and the first isolating valve if there is no pressure-relief valve.

Warranty:

Obtain the manufacturer's approval before carrying out any modifications, repairs or alterations during the warranty period.

Use only original spare parts approved by the manufacturer.

Obligations of users

- Observe all instructions provided on the pump, such as the arrow indicating the direction of rotation and the markings for pipe connections.
- Use personal protective equipment when carrying out any work on the pump.
- Avoid inappropriate use of the pump and components:
  - Do not step on or use them as a climbing aid.
  - Do not use them to support boards, ramps or beams.
  - Do not use them as a fixing point for winches or supports.
  - Do not use them for storing paper or similar materials.
  - Do not use the hot pump or motor components as a heating point.
  - Do not de-ice using gas burners or similar tools.

- Do not remove the safety guards protecting against hot, cold or moving parts during operation.
- Reinstall the safety equipment on the pump as required by regulations after any work on the pump.

Related information

7.1.1 Ambient temperature and altitude

1.3.2 Specific hazard

Observe the relevant safety regulations when handling hazardous pumped liquids (hot, flammable, poisonous or potentially harmful liquids).

2. Product introduction

2.1 Intended use

- Only use the pump for the permissible pumped liquids. See the section on pumped liquids.
- Make sure that the pump is always filled with pumped liquid during operation.
- Avoid cavitation:
  - Open the inlet-side valve completely, and do not use it to adjust the flow rate.
  - Open the outlet-side valve fully.
- Avoid damage to the motor:
  - Note the maximum permissible number of starts per hour.
- Consult the manufacturer about any other use of the pump.
- When a pump is supplied without a motor, the pump unit must fulfil the stipulations of the Machinery Directive, 2006/42/EC.

Observe these instructions in order to avoid misuse

- Do not operate the pump outside the operating limits for temperature, pressure, viscosity, flow rate, or motor speed.
- Do not operate the pump against a closed outlet-side valve.
- Do not use the pump for foodstuffs if the pump has not been adapted accordingly.
- Only select the installation types described in the installation and operating instructions:
  - Do not install the pump while it is hanging or unsupported.
  - Do not install the pump too close to sources of extreme heat or cold.
  - Do not install the pump too close to a wall.

Related information

2.4 Pumped liquids

2.2 Identification

2.2.1 Nameplate

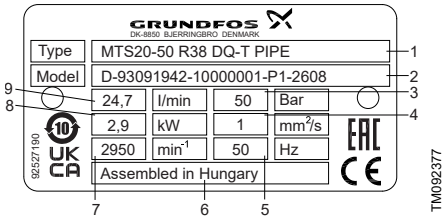

Pos.	Description
1	Type designation (see the Type key)
2	Model (see the Model code)
3	Pressure [bar]
4	Kinematic viscosity [mm^2/s]
5	Frequency [Hz]
6	Country of production
7	Speed [rpm]
8	Power consumption [kW]
9	Rated flow rate [l/min]

2.2.2 Type key

Example: MTS (E) 20-50 R 38 DQ-T

Code	Explanation
MTS	Type range
E	Code for frequency converter
20	Frame size
50	Max. pressure [bar]
R	Code for screw thread direction
38	Screw pitch angle (in degrees)
D	Code for construction
Q	Code for shaft seal/pipe connection
T	Code for installation

Key to Codes

Code	Description
Frequency converter	
E	With integrated frequency converter
Blank	Without frequency converter
Screw sense of gradient	
R	right
Construction	
D	External ball bearing, shaft seal unheated, uncooled
Shaft seal/pipe connection	
Q	Shaft seal ring/axial inlet, pipe thread as standard
8.6	Mechanical shaft seal/radial inlet, SAE as standard
Installation	
T	Pump for tank-top installation
D	Pump for dry installation
H	Pump for horizontal installation

Model code

Example: D-93091942-10000001-P1-2608

Code	Explanation
D	Model
93091942	Product number
10000001	Serial number
P1	Place of production
2608	Production year and week

2.3 Applications

MTS pumps are screw pumps designed for pumping cooling lubricants and cutting oils for machine tool applications such as:

- modern metal machining centres
- grinding and deep-hole drilling machines.

Pumps can transfer cooling lubricants with high lubricating effect or high cooling performance based on the customer's requirements.

2.4 Pumped liquids

The pumped liquids must not attack the pump materials. The composition, oil content, that is, the ability to provide lubrication, and the cooling effect of the liquid determine the pump maintenance intervals and maximum permissible loading.

Based on DIN 51385 terminology, the pumped liquids are divided into three groups according to their water and oil content:

Solutions (L)

- Inorganic materials in water
- dispersions of organic and synthetic materials in water.

Emulsions (E)

Oil-in-water, with an oil content of E 2 % to E 20 %.

Cutting and grinding oils (S)

- without additives
- with polar, physically effective additives
- with mild-effect, lubricating film forming EP additives
- with polar and mild-effect EP additives
- with active, chemical additives
- with polar and active EP additives.

Main group	Effect at the processing spot
L	High cooling effect, low lubricating effect
E	Cooling and lubricating effect
S	High lubricating effect, low cooling effect
	High surface adhesion providing protection against corrosion
	High temperature and pressure resistance

3. Receiving the product

3.1 Inspecting the product

Before installing the product, do the following:

1. Check if the product is as ordered.
2. Check if no visible parts are damaged.
3. If parts are damaged or missing, contact your local Grundfos sales company.

3.2 Handling and lifting the product

WARNING
Personal injury
Death or serious personal injury
- Use lifting gear designed for carrying the total weight to be transported.

WARNING
Personal injury
Death or serious personal injury
- Fasten the lifting gear as shown in the figures.

WARNING
Personal injury
Death or serious personal injury
- For vertical lifting, provide a safety rope between the hook and the motor eyebolt.

WARNING
Personal injury
Death or serious personal injury
- Never fasten the lifting equipment to the motor eyebolt, unless used as a safety precaution against tipping over. This is especially relevant for units with a high centre of gravity.

WARNING
Personal injury
Death or serious personal injury
- Do not stand under suspended loads.

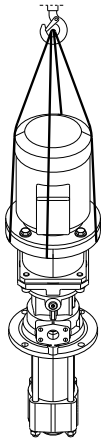

Vertical lifting

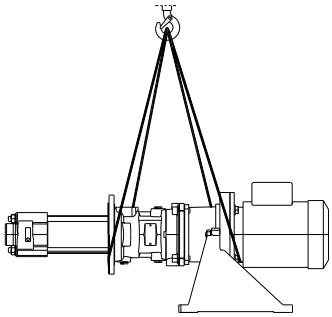

Horizontal lifting

4. Installing the product

4.1 General precautions

Do not expose the bearing to mechanical loads or electrical currents, as both can lead to material damage.

Do not make any structural modification to the pump unit or pump housing.

Do not perform any welding on the pump unit or pump housing.

Do not remove any plastic covers or screw plugs until immediately before connecting the pipes to the pump.

CAUTION
Hot surface
Minor or moderate personal injury

- The pump must be installed in such a way that persons cannot accidentally come into contact with the hot surface of the motor.

4.1.1 Preparations

Make sure the required ambient conditions are fulfilled.

See the section on ambient temperature and altitude.

Pump location

Make sure the installation site meets the following requirements:

- The pump must be freely accessible from all sides.
- There must be sufficient space for the installation or removal of the pipes, and for maintenance and repair work, especially for the installation or removal of the pump and the motor.
- The pump must not be exposed to external vibrations as those may damage the bearings.
- The pump must be protected against frost.
- The pump must be installed in a stable position so that it cannot tip over.

The mounting surface

Make sure that the mounting surface is level, free from oil, dust or other impurities, and able to support the weight of the pump unit and all operating forces.

Related information

7.1.1 Ambient temperature and altitude

4.1.2 Installation types

MTS pumps can be mounted in four types of installation:

- tank-top installation
- in-tank installation
- dry installation with flange
- dry installation with horizontal mounting foot.

Tank-top installation

The pump is mounted on top of the tank using the holes in the outlet-casing flange, so the outlet casing and the pump bracket are above the tank top.

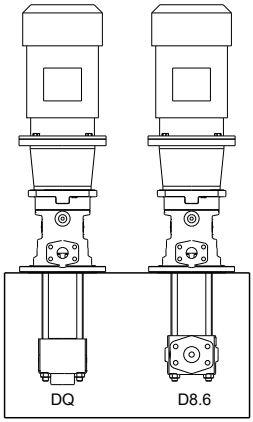

TM044565

Tank-top installation

In-tank installation

The pump can also be mounted with the outlet casing and the pump bracket inside the tank using the holes in the motor flange. This type of installation ensures that any leakage remains in the tank. However, this installation requires dismantling the motor before the pump can be fastened to the tank.

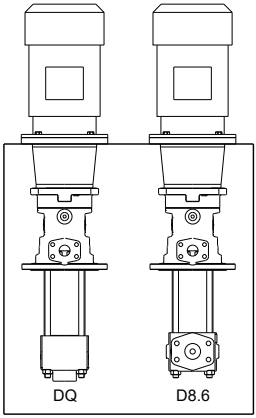

TM044566

In-tank installation

Dry installation

Using the holes in the motor flange, the pump can be fastened to a mounting foot that must be placed on a level surface. The drain must point downwards, so the pump cover must be turned on the drive side, if necessary. A mechanical shaft seal ensures a long service life.

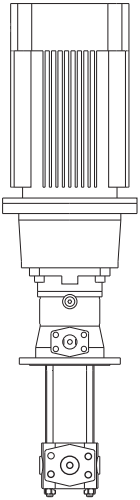

TM063350

Dry installation with flange

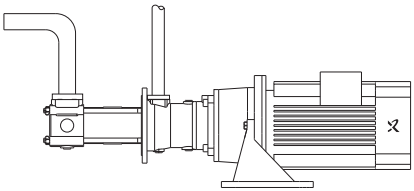

TM063351

Dry installation with horizontal mounting foot

4.1.3 Installing the motor

These instructions are only necessary if the pump unit is to be assembled on site.

! Keep the coupling halves properly aligned when slipping them on.
Do not knock or hit any components of the pump.

1. Apply a very thin coat of molybdenum disulfide, such as Molykote®, to the shaft ends of the pump and themotor.
2. Insert the shaft keys.
3. Slip on the pump-side and motor-side coupling halves. Follow the description in the Appendix, see the section on coupling assembly.
   - If a mounting fixture is not available, remove the rubber bushes and heat the coupling halves up to approximately 100 °C.
4. Tighten the set screws on both coupling halves.
5. Lift the motor and position it on the pump bracket.
6. Screw in the motor bolts.

4.1.4 Planning the pipes

Supports and flange connections

! Keep the coupling halves properly aligned when slipping them on.
Do not knock or hit any components of the pump.

1. Calculate the pipe forces taking every possible operating condition into account, such as the following:
   - flange loads according to EN ISO 14847
   - pipes in cold or warm condition
   - pipes inempty or full condition
   - pipes indepressurized or pressurized condition
   - changed flange position.
2. Make sure the pipe supports do not damage the pipes due to friction and do not lose flexibility due to corrosion.

Pipe diameters

Keep the flow resistance in the pipes as low as possible.

Inlet side:

- Make sure the nominal inlet pipe diameter is not smaller than the nominal inlet port diameter.
- Make sure the flow velocity is below 1 m/s.

Outlet side:

- Make sure the nominal outlet pipe diameter is not smaller than the nominal outlet port diameter.
- Make sure the flow velocity is below 3.28 m/s.

4.1.5 Pipe lengths

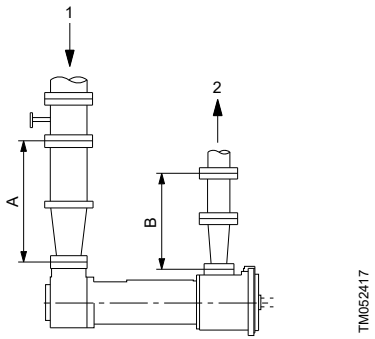

Recommended lengths of a straight pipe to and from the pump inlet and outlet sides

Pos.	Description
1	Inlet
2	Outlet

A > 5 × nominal inlet pipe diameter

B > 5 × nominal outlet pipe diameter

Observe the recommended minimum lengths of a straight pipe when installing the pump.

Inlet side: Shorter lengths of a straight pipe are possible but may limit the hydraulic performance.

Outlet side: Shorter lengths of a straight pipe are possible but can result in increased operating noise.

4.1.6 Optimizing flow conditions

1. Avoid bending radii smaller than 1.5 times the nominal pipe diameter.
2. Avoid abrupt changes of cross-section and direction along the pipes.

4.1.7 Handling leaks

1. Provide equipment for collecting and discharging leaking liquids.
2. Make sure that leaking liquids can be freely discharged.

4.1.8 Avoiding excessive pressure

1. Observe the operating instructions of the manufacturer.
2. Make sure the settings of the pressure-relief valve meet the requirements of the system.
3. Do not feed the return flow from the safety valve directly back into the inlet pipe.

4.1.9 Further safety and control equipment (recommended)

- Install a dirt trap in the inlet pipe with a mesh size of 0.6 mm.
- Provide a fine filter, if necessary. See the section on operating conditions.
- Install a non-return valve between the outlet flange and the isolating valve to prevent backflow when the pump is stopped.
- Install isolating valves in the inlet and outlet pipes to facilitate maintenance and repair work.
- Provide pressure gauges for pressure measurements in the inlet and outlet pipes.
- Provide inlet-side temperature measurements.

Only necessary for hot or hazardous pumped liquids:

- Provide leak monitoring equipment.

Collect any leaking pumped liquid and dispose of it in accordance with local environmental rules and requirements.

Related information

7.1.1 Ambient temperature and altitude

4.1.10 Connecting the pipes

Remove any impurities in the pump before connecting the pipes to avoid material damage.

Keeping the pipes clean

1. Flush all pipe parts and fittings before connection.
2. Make sure that no flange seals protrude inwards.
3. Remove any blank flanges, plugs, protective foils and protective paint from the flanges.
4. Remove any welding beads from welded pipes.

Connecting the inlet pipe, if any

1. Remove the transport screw plugs from the pump.
   - Run the pipes with a continuous downward slope towards the pump to avoid air pockets.
2. Make sure that no seals protrude inwards.
3. For tank-top and in-tank installations, observe the minimum immersion depth. See the section on liquid level.

Connecting the outlet pipe

1. Remove the transport screw plugs from the pump.
2. Connect the outlet pipe.
3. Make sure that no seals protrude inwards.

Checking pipe connections for stress

1. Before checking, make sure that the pipes are connected and cooled down.
2. Disconnect the pipe flanges from the pump.
3. Ensure that the pipes can be moved freely in all directions within the expected range of expansion:
   - nominal diameter < 150 mm: by hand
   - nominal diameter > 150 mm: with a small lever.
4. Make sure that flange surfaces are parallel.
5. Reconnect the pipe flanges to the pump.

Related information

4.1.11 Liquid level

4.1.11 Liquid level

To protect the pumps and ensure correct performance, observe the requirements in the tables below.

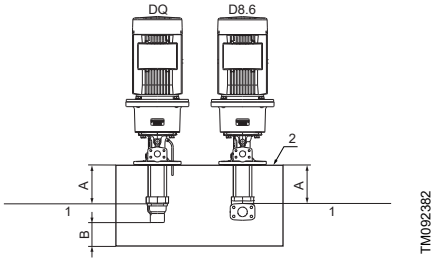

Tank-top installation

Pos.	Description
1	Min. liquid level
2	Top of tank

Pump	A [mm]	B [mm]
MTS 20	157	25
MTS 40	205	25

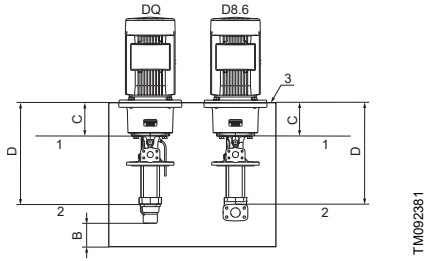

In-tank installation

Pos.	Description
1	Max. liquid level
2	Min. liquid level
3	Top of tank

Motor frame size	MTS 20		MTS 40	
	C [mm]	D [mm]	C [mm]	D [mm]
90	152	425	-	-
100	132	405	-	-
112	132	405	132	450
132	156	429	156	475
160	200	473	200	520

4.1.12 Tightening torques

The values in the table apply to oiled screws when using torque wrenches.

Thread size	Tightening torque [Nm] at strength class		
	5.6	**8.8**	**10.9**
M6	3.9	8.8	13.2
M8	9.8	21.6	31.8
M10	18.6	43.1	63.0
M12	32.3	73.5	108
M16	78.4	181	264
M20	157	353	517
M24	289	662	890
M27	426	975	1304
M30	578	1323	1775

4.2 Electrical connection

WARNING
Electric shock
Death or serious personal injury

- Switch off the power supply before you start any work on the product. Make sure that the power supply cannot be switched on accidentally.
- Connect the pump to an external main switch close to the pump and to a motor-protective circuit breaker or a CUE frequency converter. Make sure that you can lock the main switch in OFF position, that is, isolated. Type and requirements are as specified in EN 60204-1, 5.3.2.

The user is responsible for determining whether an emergency stop switch is required.

The operating voltage and frequency are marked on the motor nameplate. Ensure that the motor is suitable for the available power supply and that the terminal connection is correct. A wiring diagram is provided in the terminal box.

4.2.1 Frequency converter operation

All three-phase motors supplied by Grundfos can be connected to a frequency converter. The frequency converter must be set to operation with a constant torque.

Depending on the frequency converter type, this may cause increased acoustic noise from the motor. Furthermore, it may also cause the motor to be exposed to detrimental voltage peaks.

Grundfos motor type MG 90 (1.5 kW, 2-pole) for supply voltages up to and including 440 V (see the motor nameplate) must be protected against voltage peaks higher than 650 V (peak value) between the supply terminals.

We recommend protecting all other motors against voltage peaks higher than 850 V.

The above disturbances, that is, both increased acoustic noise and detrimental voltage peaks, can be eliminated by fitting an LC filter between the frequency converter and the motor.

For further details, contact your frequency converter or motor supplier.

5. Starting up the product

WARNING
Too high pressure and leakage
Death or serious personal injury
- Do not run the pump against a closed outlet valve for more than approximately 5 minutes.

Before starting up the pump for the first time, make sure that the following requirements are fulfilled:

- The pump is installed properly.
- The motor is installed properly.
- The operational data correspond to the values stated on the pump nameplate and in the technical data.
- All plastic covers are removed.
- All pipe connections are stress-free and sealed.
- All safety equipment is installed and tested for functionality.
- The liquid level in the tank is sufficient, that is, at least the minimum liquid level.

5.1 First start-up

5.1.1 Removing the corrosion inhibitor

Only necessary for pumps treated with corrosion inhibitor.

See the section on removing corrosion inhibitor.

Related information

6.3 Removing corrosion inhibitor

5.1.2 Priming

Priming pumps with a DQ shaft seal, without inlet pipe

1. For tank-top and in-tank installations, observe the minimum liquid level. See the section on liquid level.
2. Open the inlet-side valve, if installed.
3. Open the outlet-side valve.
4. Make sure that the outlet pipes are not blocked or leaky.
5. Start the pump.

Priming pumps with a DQ shaft seal, with inlet pipe

1. For tank-top and in-tank installations, observe the minimum liquid level. See the section on liquid level.
2. Fill the outlet area with liquid via the screw plug (pos. 214) then wait a few minutes. See the section on position numbers.
3. Open the inlet-side valve, if installed.
4. Open the outlet-side valve.
5. Make sure that the outlet pipes are not blocked or leaky.
6. Start the pump.

Priming pumps with a D8.6 shaft seal

1. Fill the shaft seal area via the screw plugs (pos. 215 and 216). See the section on position numbers.
2. For tank-top and in-tank installations, observe the minimum immersion depth. See the section on liquid level.
3. For dry installations, see the section on installation types, fill the outlet area with liquid via the screw plug (pos. 214) then wait a few minutes. See the section on position numbers.
4. Open the inlet-side valve, if installed.
5. Open the outlet-side valve.
6. Make sure that the outlet pipes are not blocked or leaky.
7. Start the pump.

Related information

4.1.11 Liquid level

4.1.2 Installation types

10.4 Position numbers

5.1.3 Checking the direction of rotation

Do not start the pump to check the direction of rotation until it is filled with liquid.

1. Switch on the motor for some seconds.
2. Make sure the motor turns clockwise as viewed from the motor fan.
3. If the direction of rotation is wrong, exchange two phases in the power supply.

5.1.4 Start-up

1. Make sure that the pump is filled properly.
2. Open the threaded connection in the pump bracket.
3. Open the outlet-side valve.
4. Open the inlet-side valve.
5. Switch on the motor and confirm that it is running smoothly.
6. Make sure the temperature rises at a rate of no more than 2 °C/min.
7. Make sure the minimum outlet pressure is higher than 2 bar.
8. After running at operating pressure and temperature for a while, check if the pump is leaking.

9. Verify that the filter system works properly and the pump is protected against entrained air, solid particles and mud.

6. Storing the product

The pump is not factory-treated for storage.

Prepare the pump for storage as described below to avoid material damage.

Related information

3.2 Handling and lifting the product

6.1 Preparation for storage

Prepare the pump properly for storage under both indoor and outdoor conditions.

Use RUST-BAN 335, for example, as corrosion inhibitor.

Applying corrosion inhibitor to the inside of the pump

1. Close the inlet-side flange with a blind flange.
2. Fill the pump with corrosion inhibitor.
3. Slowly turn the shaft by hand in the opposite direction of rotation.
4. Continue filling and turning until corrosion inhibitor comes out of the outlet-side flange without bubbles.
5. Close the outlet-side flange with a blind flange.

Applying corrosion inhibitor to the outside of the pump

Apply corrosion inhibitor to all bare metal parts using a brush or spray can.

6.2 Storage

1. Seal all openings with blind flanges, blind plugs or plastic covers.
2. Make sure the storage room meets the following conditions:
   - dry
   - frost-free
   - vibration-free
   - dust-free.
3. Turn the shaft once a month and make sure the shaft and bearing change position in the process.

6.3 Removing corrosion inhibitor

This section applies to pumps treated with corrosion inhibitor.

High water pressure or spray water can damage bearings.

Do not clean bearing areas with a water or steam jet.

Using wrong cleaning agent may cause damage to the seals.

Make sure the cleaning agent does not corrode the seals.

1. Select a cleaning agent from the following options:
   - benzene
   - wax solvents
   - diesel
   - paraffin
   - alkaline cleaner.
2. Remove the corrosion inhibitor from all bare internal parts of the pump.
3. Dispose of the cleaning agent in accordance with local environmental rules and requirements.
4. If storage time exceeds six months, check all elastomer parts (O-rings, shaft seals) for proper elasticity and replace them if necessary.

7. Technical data

7.1 Operating conditions

7.1.1 Ambient temperature and altitude

Motor power [kW]	Motor make	Motor efficiency class	Max. ambient temperature [°C]	Max. altitude above sea level [m]
2.2 - 18.5	MG	IE3	+60	3500

If the ambient temperature exceeds the above maximum values or the pump is installed at an altitude exceeding the above values, the motor must not be fully loaded due to the risk of overheating. Overheating may result from excessive ambient temperatures or the low density and, consequently, low cooling effect of the air.

If this is the case, it may be necessary to use a motor with a higher rated output.

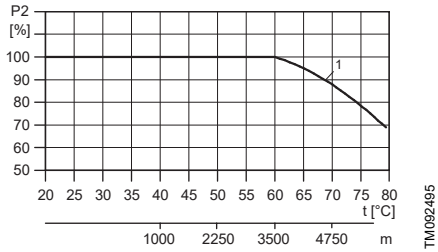

The maximum motor output (P2) depends on the ambient temperature and altitude

Pos.	Description
1	2.2 - 18.5 kW IE3 MG motors

Example

Pump with a 2.2 kW IE3 MG motor

If this pump is installed 4750 m above sea level, the motor must not be loaded more than 88 % of the rated output. At an ambient temperature of 75 °C, the motor must not be loaded more than 78 % of the rated output. If the pump is installed 4750 m above sea level at an ambient temperature of 75 °C, the motor must not be loaded more than 68.6 % of the rated output (88 % × 78 %).

7.1.2 Humidity

Relative humidity: Max. 85 %.

7.1.3 Sound pressure level

Measuring conditions:

- Distance to the pump: 1 m
- operation: cavitation-free
- motor: IEC standard motor
- tolerance: ± 3 dB(A).

The MTS design allows gentle, even, virtually pulsation-free and low-noise pumping. The noise emission ranges between 56 and 74 dB(A) depending on speed, pump size and installation. MTS pumps operate significantly more quietly than rotary-lobe and centrifugal pumps of comparable performance.

7.1.4 Filtration

To achieve an acceptable pump service life, we recommend filtering the pumped liquids to a cleanliness class in accordance with ISO 4406:2021. The recommended cleanliness class depends on the pumping pressure and the abrasive class (1 to 7). Examples of processes corresponding to the abrasive classes are shown in the table below.

The additional specifications for filter mesh and flow rate are guiding values for orientation. The decisive factor is the cleanliness of the liquids as indicated by the cleanliness class.

To avoid damage by solid particles, we recommend using a nominal, two-dimensional filter mesh of 65 µm or finer.

	Abrasive class						
	1	**2**	**3**	**4**	**5**	**6**	**7**
Material	Steel, cast iron, Al	Steel, cast iron, Al	Al (Si > 5 %)	Steel	Steel, hard	Tungsten carbide	Titanium
Process	Drilling	Turning/ milling	Turning/ milling	Grinding	Grinding	Grinding	Grinding
Tool	High-speed steel (HSS)	Tungsten carbide	Tungsten carbide	Corundum	Corundum	CBN	Diamond
Pressure level							
≤ 120 bar	21/19/16	21/19/16	21/19/16	20/18/15	20/18/15	19/17/14	18/16/13
	≤ 30 µm	≤ 25 µm	≤ 20 µm	≤ 17 µm	≤ 15 µm	≤ 10 µm	≤ 6 µm
	≤ 30 mg/l	≤ 25 mg/l	≤ 20 mg/l	≤ 15 mg/l	≤ 10 mg/l	≤ 5 mg/l	≤ 3 mg/l
≤ 90 bar	22/20/17	22/20/17	22/20/17	21/19/16	21/19/16	20/18/15	19/17/14
	≤ 50 µm	≤ 45 µm	≤ 40 µm	≤ 30 µm	≤ 20 µm	≤ 15 µm	≤ 10 µm
	≤ 60 mg/l	≤ 50 mg/l	≤ 40 mg/l	≤ 30 mg/l	≤ 20 mg/l	≤ 10 mg/l	≤ 5 mg/l
≤ 60 bar	23/21/18	23/21/18	23/21/18	22/20/17	22/20/17	21/19/16	20/18/15
	≤ 80 µm	≤ 75 µm	≤ 60 µm	≤ 50 µm	≤ 40 µm	≤ 20 µm	≤ 15 µm
	≤ 120 mg/l	≤ 100 mg/l	≤ 80 mg/l	≤ 60 mg/l	≤ 40 mg/l	≤ 20 mg/l	≤ 10 mg/l
≤ 30 bar	24/22/19	24/22/19	24/22/19	23/21/18	23/21/18	22/20/17	21/19/16
	≤ 150 µm	≤ 120 µm	≤ 100 µm	≤ 80 µm	≤ 60 µm	≤ 40 µm	≤ 20 µm
	≤ 250 mg/l	≤ 200 mg/l	≤ 160 mg/l	≤ 120 mg/l	≤ 80 mg/l	≤ 40 mg/l	≤ 20 mg/l

The data in the below table are reference values. The actual airborne sound pressure level depends especially on the installation conditions.

Pump	**L_{pA} [dB(A)] for pump at speed**	
	2900 [rpm]	**3500 [rpm]**
MTS 20	56	58
MTS 40	59	61

8. Taking the product out of operation

CAUTION
Corrosive liquids
Minor or moderate personal injury
- Wear personal protective equipment.

CAUTION
Toxic liquids
Minor or moderate personal injury
- Wear personal protective equipment.

CAUTION
Hot or cold liquid
Minor or moderate personal injury
- Wear personal protective equipment.

CAUTION
Hot or cold surface
Minor or moderate personal injury
- Make sure that no one can accidentally come into contact with hot or cold surfaces.

Take the following measures whenever the pump is shut down.

Relevant steps	Required actions
Shutting the pump down for a prolonged period	Apply the approriate measures for the pumped liquids in the table below.
Emptying the pump	**D8.6:** Close the inlet-side and outlet-side valves, and drain the pump by removing the drain plug and turning the pump manually until the pump is empty. **DQ:** Close the outlet-side valve, and empty the pump through the inlet-side by turning the pump manually.
Dismounting the pump	Switch off the power supply, and make sure that it cannot be switched on accidentally.
Storing the pump	Follow the storage instructions described in the section on storage.

Pumped-liquid properties	Duration of shutdown (depending on process)	
	Short	**Long**
Solids sedimenting	Flush the pump.	Flush the pump.
Solidifying/freezing, non-corrosive	Heat up or empty the pump and tanks.	Empty the pump and tanks.
Solidifying/freezing, corrosive	Heat up or empty the pump and tanks.	• Empty the pump and tanks. • Apply corrosion inhibitor to the pump and tanks.
Remaining liquid, non-corrosive	-	-
Remaining liquid, corrosive	-	• Empty the pump and tanks. • Apply corrosion inhibitor to the pump and tanks.

Related information

6.2 Storage

9. Starting up after standstill

1. If the pump has been shut down for over six months, take the following measures before starting it up again:
   - Replace elastomer seals (O-rings, shaft seal rings).
   - Replace antifriction bearings in the pump.
   - Replace the motor bearing, if necessary.
2. Perform all steps as required for the first start-up. See the section on first start-up.

9.1 Test run of the standby pump (if installed)

A standby pump must be primed and vented.

Perform a test run on the standby pump at least once a week.

10. Servicing the product

WARNING
Electric shock
Death or serious personal injury
- Switch off the power supply before you start any work on the product. Make sure that the power supply cannot be switched on accidentally.

WARNING
Moving parts
Death or serious personal injury
- Tighten the coupling screws to the correct torque.
- Install the coupling guards securely to the pump with the screws intended for this purpose.

CAUTION
Corrosive liquids
Death or serious personal injury
- Wear personal protective equipment.

CAUTION
Toxic liquids
Minor or moderate personal injury
- Wear personal protective equipment.

CAUTION
Hot or cold liquid
Minor or moderate personal injury
- Wear personal protective equipment.

10.1 Maintaining the product

CAUTION
Hot or cold surface
Minor or moderate personal injury
- Make sure that no one can accidentally come into contact with hot or cold surfaces.

10.1.1 Periodic checks

Perform the following checks at regular intervals, depending on the operational load on the pump:
- Confirm that the temperature of antifriction bearings is lower than 70 °C.
- Confirm that normal operating conditions prevail.
- Check if the pressure-relief valve is working.

For trouble-free operation, always ensure the following:
- There is no dry running.
- There are no leaks.
- There is no cavitation.
- The inlet-side isolating valves are open.
- The filters are unclogged and clean.
- There is sufficient pump inlet pressure.
- There are no unusual running noises or vibrations.
- There is no excessive leakage at the shaft seal.

10.1.2 Bearings

Intermittent operation, high temperatures, and aggressive ambient and process conditions reduce the service life of bearings.

The deep-groove ball bearings comply with DIN 625.

The bearings are greased for life, cannot be relubricated, and have sealing washers on both sides.

We recommend replacing the greased-for-life bearings every two years as a preventive measure.

10.1.3 Shaft seal

MTS pumps are available with two types of shaft seal:
- mechanical shaft seal
- shaft seal ring.

Mechanical shaft seals are subject to natural wear that strongly depends on the operating conditions. Therefore, no general statements can be made regarding their service life.

Both mechanical shaft seals and shaft seal rings have functional leaks. In the event of major leaks, replace the shaft seal and its auxiliary seals.

10.2 Repairing the product

10.2.1 Disassembling

Before disassembling the pump, make sure the following requirements are fulfilled:

- The pump is depressurized.
- The outlet-side isolating valve is closed.
- The pump is completely empty, flushed and decontaminated.
- All electrical connections are disconnected and the motor cannot be switched on accidentally.
- The pump has cooled down.
- The coupling guard is dismounted.
- The spacer is removed if the coupling is a spacer coupling.
- Auxiliary systems are shut down, depressurized and emptied.
- The pressure gauge lines are dismounted.

Observe the following during disassembling:

- Mark the precise orientation and position of all components before dismounting them.
- Disassemble components concentrically without tilting them.
- For disassembling the pump, see the appendix for constructional drawings.

10.2.2 Re-installing

Install the components concentrically and without tilting, in accordance with the markings made during disassembly.

Observe the following during re-installation:

- Always replace lost or damaged screws with screws of the same strength class.
- Replace worn parts with genuine spare parts.
- Replace seals with new seals of the same material, inserting them in a way that prevents rotation.
- Tighten screws and nuts to the prescribed tightening torques. See the section on tightening torques.
- Clean all parts without removing any markings.
- For assembling the pump, see the appendix for constructional drawings.
- Install the pump in the system according to the section on installing the product.

Related information

4.1.12 Tightening torques
4.1 General precautions

10.3 Ordering spare parts

Replaceable parts are listed in the section on position numbers.

Have the following information ready when ordering spare parts:

- pump type
- model and serial number
- production year and week
- part number
- designation
- quantity.

For trouble-free replacement in the event of faults, we recommend keeping a spare pump available on site.

Related information

10.4 Position numbers

10.4 Position numbers

Pos.	Description
1	Outlet casing
2	Rotor housing
4	Inlet casing
12	Drive screw
13	Idler screw
121	O-ring [1)]
132	O-ring [1)]
140	Seal ring [1)]
141	Seal ring [1)]
142	Seal ring [1)]
145	Non-return valve
146	Bypass pipe
170	Secondary seal [2)]
183	Shaft seal ring [2)]
186	Mechanical shaft seal [3)]
187	Mechanical seal adapter [3)]
188	Supporting washer
200	Socket head cap screw
214	Screw plug
215	Screw plug
216	Screw plug
230	Thrust disc
231	Disc [1)]
251	Circlip [1)]

Pos.	Description
252	Circlip [1]
264	Supporting washer [1]
290	Shaft key [1]
292	Deep groove ball bearing [1]
400	Adapter [4]
420	Hose (160 mm) [4]
970	Nameplate

1) Included in a repair kit.

2) Can be ordered within a seal ring kit.

3) Can be ordered within a mechanical shaft seal kit.

4) Can be ordered within a hose kit.

For service kit numbers, please see Grundfos Product Center at *http://product-selection.grundfos.com*.

10.5 Constructional drawings

10.5.1 Sectional drawings

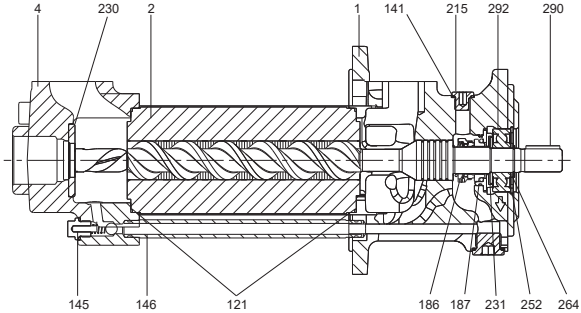

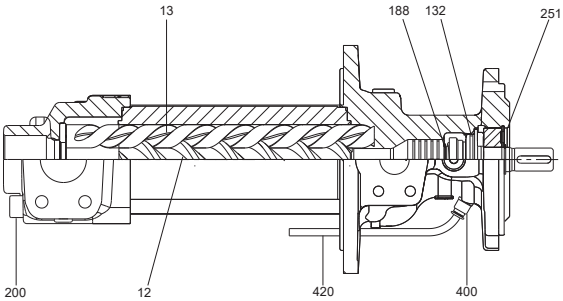

TM092057

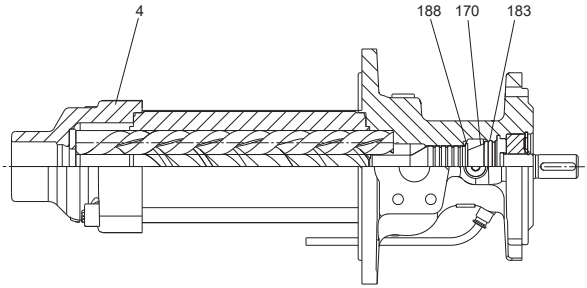

TM092058

10.5.2 Exploded view

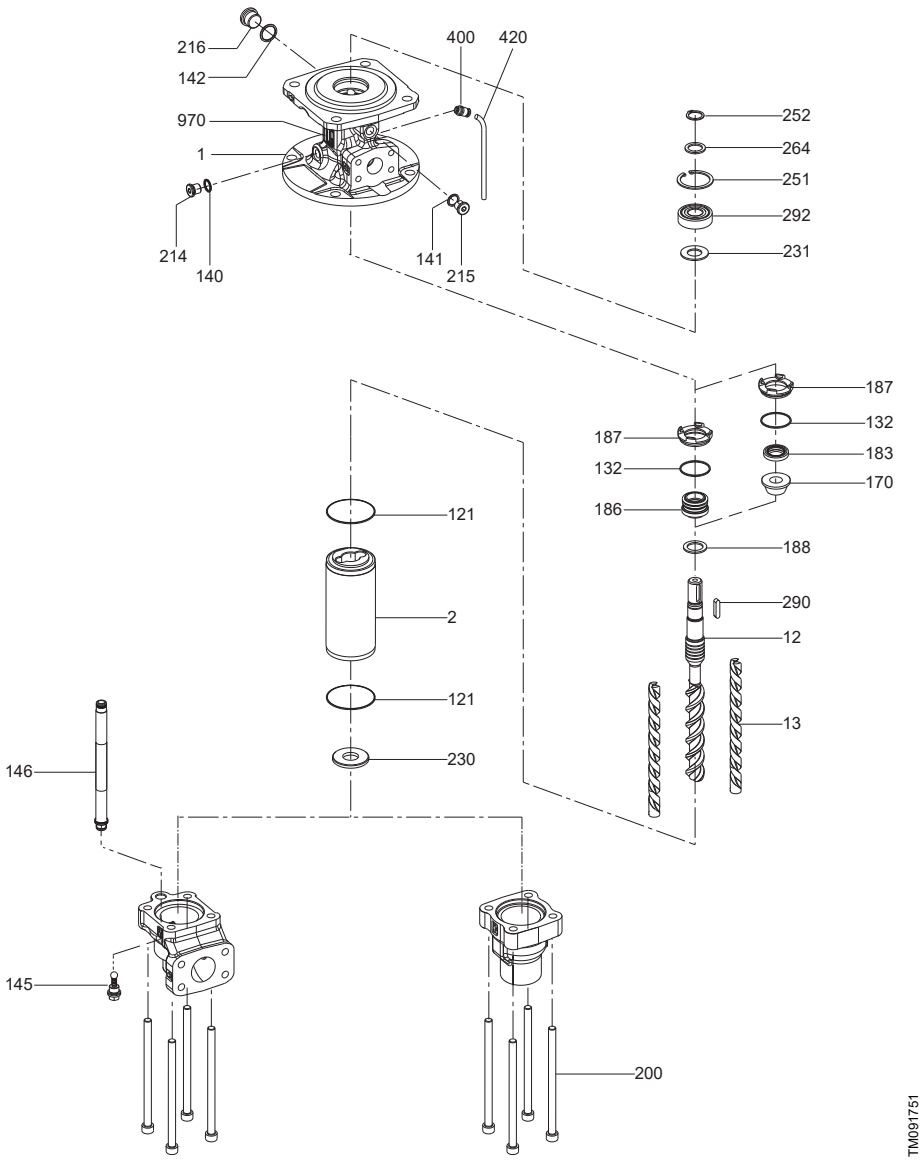

10.6 Returning the pump to the manufacturer

Before returning the pump, make sure the following requirements are fulfilled:

- The pump is depressurized.
- The pump is completely empty.
- All electrical connections are disconnected and the motor cannot be switched on accidentally.
- The pump has cooled down.
- The coupling guard is dismounted.
- The spacer is removed if the coupling is a spacer coupling.
- Auxiliary systems are shut down, depressurized and emptied.
- The pressure gauge lines are dismounted.

Before returning the pump to the manufacturer, take the necessary measures for the required repair work as listed in the table below.

Location of repair	Action before return
Customer's premises	• Dismount the defective component and return it to the manufacturer.
Manufacturer's premises	• Flush the pump and decontaminate it if it has been used for hazardous liquids.
Manufacturer's premises for warranty repairs	• Return the pump to the manufacturer in complete condition without dismantling it.

10.6.1 Contaminated products

CAUTION
Biological hazard
Minor or moderate personal injury
- Flush the product thoroughly with clean water, and rinse the parts in water.

The product is classified as contaminated if it is used for a liquid that is injurious to health or toxic.

If you request Grundfos to service the product, provide details about the liquid before returning it. Otherwise, Grundfos can refuse to accept the product for service.

Clean the product in the best possible way before you return it.

The customer must pay the costs of returning the product.

10.7 Service documentation

Service documents are available in Grundfos Product Center at *http://product-selection.grundfos.com*.

11. Fault finding

WARNING
Electric shock
Death or serious personal injury
- Switch off the power supply before you start any work on the product. Make sure that the power supply cannot be switched on accidentally.

WARNING
Moving parts
Death or serious personal injury
- Tighten the coupling screws to the correct torque.
- Install the coupling guards securely to the pump with the screws intended for this purpose.

CAUTION
Corrosive liquids
Minor or moderate personal injury
- Wear personal protective equipment.

CAUTION
Toxic liquids
Minor or moderate personal injury
- Wear personal protective equipment.

CAUTION
Hot or cold liquid
Minor or moderate personal injury
- Wear personal protective equipment.

CAUTION
Hot or cold surface
Minor or moderate personal injury
- Make sure that no one can accidentally come into contact with hot or cold surfaces.

11.1 The pump is not pumping.

Cause	Remedy
The transport screw plugs are still in place.	• Remove the transport screw plugs. Disassemble the pump and inspect it for dry-running damage.
The inlet pipe is closed by the valve.	• Open the valve.
The inlet pipe is not vented properly or not filled up completely.	• Fill up the pump and pipes completely, and vent them.
Air pockets are forming in the inlet pipe.	• Install a venting device. Correct the pipe layout.

Cause	Remedy
The outlet pipe is blocked.	• Clean the outlet pipe.
The pump direction of rotation is incorrect.	• Exchange any two phases of the motor power supply. See the section on checking the direction of rotation.
The pump is dirty.	• Disassemble and clean the pump.
The inlet pipe, rotor housing or inlet casing is blocked or encrusted.	• Clean the inlet pipe, rotor housing or inlet casing.
Air is being drawn into the system.	• Seal the source of air leakage or repair the malfunctioning component if necessary.
The pump is cavitating due to an excessive amount of gas.	• Check the pipes. Clean or enlarge the filter. Install an inlet pipe with a bigger cross-section.
There is excess play between the spindles or the spidles and the housing.	• Repair or replace any worn parts.
The shaft seal is leaking excessively.	• Replace the shaft seal.

Related information

5.1.3 Checking the direction of rotation

11.2 The pump performance is insufficient.

Cause	Remedy
The inlet pipe, rotor housing or inlet casing is blocked or encrusted.	• Clean the inlet pipe, rotor housing or inlet casing.
Air is being drawn into the system.	• Seal the source of air leakage or repair the malfunctioning component if necessary.
The pump is cavitating due to an excessive amount of gas.	• Check the pipes. Clean or enlarge the filter. Install an inlet pipe with a bigger cross-section.
There is excess play between the spindles or the spindles and the housing.	• Repair or replace any worn parts.
The shaft seal is leaking excessively.	• Replace the shaft seal.
The motor is running on two phases.	• Check the fuse and replace it if necessary. Check the cable connections and insulation. Replace the cable if necessary.
The motor speed is too low.	• Compare the required motor speed with the specifications on the pump nameplate. Replace the motor if necessary. Increase the motor speed if speed control is available.
An isolating valve in the inlet pipe is not fully opened.	• Open the valve fully.
The inlet pipe cross-section is too small.	• Install an inlet pipe with a larger cross-section. Remove any encrustations from the inlet pipe. Open the valve fully.
The inlet height is too high, the $NPSH_{pump}$ is larger than the $NPSH_{system}$.	• Increase the inlet pressure. Consult the manufacturer.
The pump is cavitating because the temperature of the pumped liquid is too high.	• Increase the inlet pressure. Lower the temperature of the pumped liquid. Consult the manufacturer.
The hydraulic parts of the pump are dirty, clotted or encrusted.	• Disassemble the pump and clean the parts.
The viscosity or specific gravity of the pumped liquid is outside the range specified for the pump.	• Consult the manufacturer.
The pump parts are worn.	• Replace the worn pump parts.

11.3 The pump performance is excessive.

Cause	Remedy
The motor speed is too high.	• Compare the required motor speed with the specifications on the pump nameplate. Replace the motor if

Cause	Remedy
	necessary. Reduce the motor speed if speed control is available.

11.4 There is no inlet pressure.

Cause	Remedy
The pump direction of rotation is incorrect.	• Exchange any two phases of the motor power supply. See the section on checking the direction of rotation.
The pump is dirty.	• Disassemble and clean the pump.
The inlet pipe, rotor housing or inlet casing is blocked or encrusted.	• Clean the inlet pipe, rotor housing or inlet casing.
Air is being drawn into the system.	• Seal the source of air leakage or repair the malfunctioning component if necessary.
The pump is cavitating due to an excessive amount of gas.	• Check the pipes. Clean or enlarge the filter. Install an inlet pipe with a bigger cross-section.
There is excess play between the spindles or the spindles and the housing.	• Repair or replace any worn parts.
The shaft seal is leaking excessively.	• Replace the shaft seal.
The motor is running on two phases.	• Check the fuse and replace it if necessary. Check the cable connections and insulation. Replace the cable if necessary.
The motor speed is too low.	• Compare the required motor speed with the specifications on the pump nameplate. Replace the motor if necessary. Increase the motor speed if speed control is available.
An isolating valve in the inlet pipe is not fully opened.	• Open the valve fully.
The inlet pipe cross-section is too small.	• Install an inlet pipe with a larger cross-section. Remove any encrustations from the inlet pipe. Open the valve fully.
The inlet height is too high, the $NPSH_{pump}$ is larger than the $NPSH_{system}$.	• Increase the inlet pressure. Consult the manufacturer.
The pump is cavitating because the temperature of the pumped liquid is too high.	• Increase the inlet pressure. Lower the temperature of the pumped liquid. Consult the manufacturer.
The hydraulic parts of the pump are dirty, clotted or encrusted.	• Disassemble the pump and clean the parts.
The viscosity or specific gravity of the pumped liquid is outside the range specified for the pump.	• Consult the manufacturer.
The pump parts are worn.	• Replace the worn pump parts.

Related information

5.1.3 Checking the direction of rotation

11.5 The pump operation is unstable, there are jerks and noise.

Cause	Remedy
The inlet pipe is not vented properly or not filled up completely.	• Fill up the pump and pipes completely, and vent them.
Air pockets are forming in the inlet pipe.	• Install a venting device. Correct the pipe layout.
The outlet pipe is blocked.	• Clean the outlet pipe.
The pump direction of rotation is incorrect.	• Exchange any two phases of the motor power supply. See the section on checking the direction of rotation.
The inlet pipe, rotor housing or inlet casing is blocked or encrusted.	• Clean the inlet pipe, rotor housing or inlet casing.
Air is being drawn into the system.	• Seal the source of air leakage or repair the malfunctioning component if necessary.

Cause	Remedy
The pump is cavitating due to an excessive amount of gas.	• Check the pipes. Clean or enlarge the filter. Install an inlet pipe with a bigger cross-section.
There is excess play between the spindles or the spindles and the housing.	• Repair or replace any worn parts.
The motor is running on two phases.	• Check the fuse and replace it if necessary. Check the cable connections and insulation. Replace the cable if necessary.
The motor speed is too high.	• Compare the required motor speed with the specifications on the pump nameplate. Replace the motor if necessary. Reduce the motor speed if speed control is available.
The inlet pipe cross-section is too small.	• Install an inlet pipe with a larger cross-section. Remove any encrustations from the inlet pipe. Open the valve fully.
The inlet height is too high, the $NPSH_{pump}$ is larger than the $NPSH_{system}$.	• Increase the inlet pressure. Consult the manufacturer.
The pump is cavitating because the temperature of the pumped liquid is too high.	• Increase the inlet pressure. Lower the temperature of the pumped liquid. Consult the manufacturer.
The hydraulic parts of the pump are dirty, clotted or encrusted.	• Disassemble the pump, and clean the parts.
The pump parts are worn.	• Replace the worn pump parts.
The pump is distorted.	• Check the pipe connections at the pump.
The antifriction bearing in the pump is defective.	• Replace the antifriction bearing.
The outlet-side valve is not opened wide enough.	• Open the outlet-side valve fully.
The coupling parts are worn.	• Replace the coupling.

Related information

5.1.3 Checking the direction of rotation

11.6 The pump is jammed.

Cause	Remedy
The pump is dirty.	• Disassemble and clean the pump.
The pump parts are worn.	• Replace the worn pump parts.
The pump is distorted.	• Check the pipe connections at the pump.
The antifriction bearing in the pump is defective.	• Replace the antifriction bearing.
The antifriction bearing in the motor is defective.	• Replace the antifriction bearing.

11.7 The pump is leaking.

Cause	Remedy
The shaft seal is leaking excessively.	• Replace the shaft seal.
The pump is distorted.	• Check the pipe connections at the pump.
The flange bolts are not tightened properly.	• Tighten the flange bolts. See the section on tightening torques.
The mechanical shaft seal is worn.	• Replace the mechanical shaft seal.
The pump housing seal is defective.	• Replace the pump housing seal.

Related information

4.1.12 Tightening torques

11.8 The motor power input is excessive.

Cause	Remedy
The motor is running on two phases.	• Check the fuse and replace it if necessary. Check the cable connections and insulation. Replace the cable if necessary.
The motor speed is too high.	• Compare the required motor speed with the specifications on the pump nameplate. Replace the motor if necessary. Reduce the motor speed if speed control is available.

Cause	Remedy
The viscosity or specific gravity of the pumped liquid is outside the range specified for the pump.	• Consult the manufacturer.
The pump is distorted.	• Check the pipe connections at the pump.
The antifriction bearing in the pump is defective.	• Replace the antifriction bearing.
The antifriction bearing in the motor is defective.	• Replace the antifriction bearing.

12. Disposing of the product

This product or parts of it must be disposed of in an environmentally sound way.

1. Use the public or private waste collection service.
2. If this is not possible, contact the nearest Grundfos company or service workshop.

	The crossed-out wheelie bin symbol on a product means that it must be disposed of separately from household waste. When a product marked with this symbol reaches its end of life, take it to a collection point designated by the local waste disposal authorities. The separate collection and recycling of such products will help protect the environment and human health.

See also end-of-life information at *www.grundfos.com/product-recycling*.

13. Document quality feedback

To provide feedback about this document, scan the QR-code using your phone's camera or a QR code app.

Click here to submit your feedback

A.1. Coupling assembly

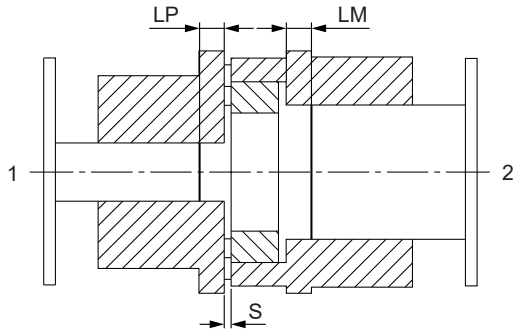

Coupling assembly

Pos.	Description
1	Pump side
2	Motor side

Coupling assembly for pump sizes MTS 20, 40

Pump size	Motor frame size	LM [mm]	LP [mm]	S [mm]	Coupling
MTS 20	90	20	7	2	R24.24 - 19
MTS 20	100	0	-3	2	R24.28 - 19
MTS 20, 40	112	0	-3	2	R24.28 - 19
MTS 20, 40	132	-2	1	2,5	R28.38 - 19
MTS 20, 40	160	-2	11	3	R38.42 - 19

1. 中国 RoHS

产品中有害物质的名称及含有信息表

部件名称	有害物质									
	铅 (Pb)	汞 (Hg)	镉 (Cd)	六价铬 (Cr6+)	多溴联苯 (PBBs)	多溴二苯醚 (PBDEs)	邻苯二甲酸二正丁酯（DBP）	邻苯二甲酸二异丁酯 (DIBP)	邻苯二甲酸丁基苄酯（BBP）	邻苯二甲酸二（2-乙基）己酯（DEHP）
泵壳	X	O	O	O	O	O	O	O	O	O
紧固件	X	O	O	O	O	O	O	O	O	O
管件	X	O	O	O	O	O	O	O	O	O
定子	X	O	O	O	O	O	O	O	O	O
转子	X	O	O	O	O	O	O	O	O	O

注 1： O：表示该有害物质在该部件所有均质材料中的含量均不超出电器电子产品有害物质限制使用国家标准要求。
X：表示该有害物质至少在该部件的某一均质材料中含量超出电器电子产品有害物质限制使用国家标准要求。
注 2：以上未列出的部件，表明其有害物质含量均不超出电器电子产品有害物质限制使用国家标准要求。

TM090584

EU declaration of conformity

GB: EU declaration of conformity

For products with CE marking on the nameplate.

We, Grundfos, declare under our sole responsibility that products (1) declared below are in conformity with the relevant union harmonisation legislation (2), harmonised standards or other technical specifications (3).

This declaration of conformity refers to the Grundfos document: 96496966, 96440790, 96496967, 98189180, 93225743, 93544337

CZ: EU prohlášení o shodě

Pro výrobky s označením CE na typovém štítku.

My společnost Grundfos prohlašujeme na svou plnou odpovědnost, že níže uvedené výrobky (1) jsou v souladu s příslušnými harmonizačními právními předpisy (2), harmonizačními normami nebo jinými technickými specifikacemi (3) Evropské unie.

Toto prohlášení o shodě odkazuje na dokument společnosti Grundfos: 96496966, 96440790, 96496967, 98189180, 93225743, 93544337

DE: EU-Konformitätserklärung

Für Produkte mit CE-Kennzeichnung auf dem Typenschild.

Wir, Grundfos, erklären in alleiniger Verantwortung, dass die Produkte (1), auf die sich die folgende Erklärung bezieht, den nachstehend genannten Harmonisierungsrechtsvorschriften (2), Normen und Spezifikationen (3) der EU entspricht.

Diese Konformitätserklärung bezieht sich auf das Grundfos-Dokument: 96496966, 96440790, 96496967, 98189180, 93225743, 93544337

ES: Declaración de conformidad UE

Para productos con marcado CE en la placa de características

Grundfos declara, bajo su exclusiva responsabilidad, que los productos (1) que a continuación se detallan son conformes con la legislación (2), las normas u otras especificaciones técnicas (3) armonizadas de la Unión que correspondan.

La presente declaración de conformidad concierne al siguiente documento de Grundfos: 96496966, 96440790, 96496967, 98189180, 93225743, 93544337

FR : Déclaration de conformité UE

Pour les produits avec marquage CE sur la plaque signalétique.

Nous, Grundfos, déclarons sous notre seule responsabilité que les produits (1) déclarés ci-dessous sont conformes à la législation d'harmonisation (2), aux normes harmonisées ou à d'autres spécifications techniques (3).

Cette déclaration de conformité fait référence au document Grundfos : 96496966, 96440790, 96496967, 98189180, 93225743, 93544337

HU: EU megfelelőségi nyilatkozat

Az adattáblán CE-jelöléssel ellátott termékek esetében.

Mi, a Grundfos, saját kizárólagos felelősségünkre kijelentjük, hogy az alább feltüntetett termékek (1) megfelelnek a vonatkozó uniós harmonizációs jogszabályoknak (2), a harmonizált szabványoknak vagy egyéb műszaki előírásoknak (3).

Ez a megfelelőségi nyilatkozat a Grundfos dokumentumra vonatkozik: 96496966, 96440790, 96496967, 98189180, 93225743, 93544337

IT: Dichiarazione di conformità UE

Per prodotti con marcatura CE sulla targhetta.

Grundfos dichiara sotto la propria esclusiva responsabilità che i prodotti (1) dichiarati di seguito sono conformi alla pertinente normativa di armonizzazione dell'Unione (2), alle norme armonizzate o ad altre specifiche tecniche (3).

La presente dichiarazione di conformità fa riferimento al documento Grundfos: 96496966, 96440790, 96496967, 98189180, 93225743, 93544337

PL: Deklaracja zgodności WE

Dla produktów z oznaczeniem CE na tabliczce znamionowej.

Firma Grundfos oświadcza z pełną odpowiedzialnością, że produkty (1), których dotyczy niniejsza deklaracja, są zgodne z odpowiednimi unijnymi przepisami harmonizacyjnymi (2), normami zharmonizowanymi lub innymi specyfikacjami technicznymi (3).

Niniejsza deklaracja zgodności odnosi się do dokumentu Grundfos: 96496966, 96440790, 96496967, 98189180, 93225743, 93544337

PT: Declaração de conformidade UE

Para produtos com marcação CE na chapa de características.

A Grundfos declaramos sob sua única responsabilidade que os produtos (1) declarados abaixo estão em conformidade com a legislação de harmonização (2), as normas de harmonização ou outras especificações técnicas (3) relevantes da União.

Esta declaração de conformidade refere-se ao documento Grundfos: 96496966, 96440790, 96496967, 98189180, 93225743, 93544337

TR: AB uygunluk beyanı

Etiketinde CE işareti bulunan ürünler için.

Grundfos olarak, aşağıdaki beyan edilen ürünlerin (1) ilgili birlik uyum mevzuatı (2), uyumlaştırılmış standartlar veya diğer teknik özellikler (3) ile uyumlu olduğunu tüm sorumluluk bize ait olmak üzere beyan ederiz.

Bu uygunluk beyanı, Grundfos dokümanıyla ilgilidir: 96496966, 96440790, 96496967, 98189180, 93225743, 93544337

Grundfos Holding A/S
Poul Due Jensens Vej 7
8850 Bjerringbro, Denmark
www.grundfos.com

MTR, SPK, MTH, MTC, MTS (1)

Union harmonisation legislation (2)
Harmonised standards or other technical specifications (3)

- **Machinery Directive (2006/42/EC)**
  Standards used: EN 809:1998+A1:2009/AC:2010
- **EcoDesign Directive 2009/125/EC**
  (EU) No 547/2012
  Standard used: EN 16480:2021
- **RoHS Directives: (2011/65/EU and 2015/863/EU)**
  Standard used: EN IEC 63000:2018

Bjerringbro, 1 May 2026

Mikkel Boel Nørgaard Essenbæk
Head of PD Multistage

Grundfos Holding A/S
Poul Due Jensens Vej 7
8850 Bjerringbro, Denmark
www.grundfos.com

10000418656

UK declaration of conformity

UK declaration of conformity

We, Grundfos, declare under our sole responsibility that the products to which the declaration below relates, are in conformity with UK regulations, standards and specifications to which conformity is declared, as listed below:

Valid for Grundfos products:

MTR, SPK, MTH, MTC, MTS

- Supply of Machinery (Safety) Regulations 2008

  Standards used: EN 809:1998, A1:2009.
- The Ecodesign for Energy-Related Products and Energy Information Regulations 2021 and 2019
- The Restriction of the Use of Certain Hazardous Substances in Electrical and Electronic Equipment Regulations 2019

  Standards used: EN IEC 63000:2018

This UK declaration of conformity is only valid when accompanying Grundfos instructions.

UK Importer: Grundfos Pumps ltd. Grovebury Road, Leighton Buzzard, LU7 4TL.

Bjerringbro, 1 April 2026

Mikkel Boel Nørgaard Essenbæk
Head of PD Multistage
Grundfos Holding A/S
Poul Due Jensens Vej 7
8850 Bjerringbro, Denmark
www.grundfos.com

Manufacturer and person empowered to sign the UK declaration of conformity.

10000418662

RUS

MTS

Руководство по эксплуатации

Руководство по эксплуатации на данное изделие является составным и включает в себя несколько частей:
Часть 1: настоящее «Руководство по эксплуатации».
Часть 2: электронная часть «Паспорт. Руководство по монтажу и эксплуатации» размещенная на сайте компании Грундфос. Перейдите по ссылке, указанной в конце документа.
Часть 3: информация о сроке изготовления, размещенная на фирменной табличке изделия.
Сведения о подтверждении соответствия:
Насосы типа MTS декларированы на соответствие требованиям Технических регламентов Таможенного союза: ТР ТС 010/2011 «О безопасности машин и оборудования»; ТР ТС 020/2011 «Электромагнитная совместимость технических средств».

KAZ

MTS

Пайдалану бойынша нұсқаулық

Атаулы өнімге арналған пайдалану бойынша нұсқаулық құрамалы болып келеді және келесі бөлімдерден тұрады:
1 бөлім: атаулы «Пайдалану бойынша нұсқаулық»
2 бөлім: Грундфос компаниясының сайтында орналасқан электронды бөлім «Төлқұжат, Құрастыру және пайдалану бойынша нұсқаулық». Құжат соңында көрсетілген сілтеме арқылы өтіңіз.
3 бөлім: өнімнің фирмалық тақташасында орналасқан шығарылған уақыты жөніндегі мәлімет
Сәйкестікті растау туралы мәліметтер:
MTS типті сорғылар Кеден одағының Техникалық регламенттерінің талаптарына сәйкестікке декларацияланған: КО ТР 010/2011 «Машиналар мен жабдықтардың қауіпсіздігі туралы»; КО ТР 020/2011 «Техникалық құралдардың электромагниттік үйлесімділігі туралы».

KG

MTS

Пайдалануу боюнча колдонмо

Аталган жабдууну пайдалануу боюнча колдонмо курамдык жана өзүнө бир нече бөлүкчөнү камтыйт:
1-Бөлүк: «Пайдалануу боюнча колдонмо»
2-Бөлүк: «Паспорт. Пайдалануу жана монтаж боюнча колдонмо» электрондук бөлүгү Грундфос компаниянын сайтында жайгашкан. Документтин аягында көрсөтүлгөн шилтемеге кайрылыңыз.
3-Бөлүк: жабдуунун фирмалык тактасында жайгашкан даярдоо мөөнөтү тууралуу маалымат.
Шайкештикти ырастоо тууралуу маалымат:
MTS түрүндөгү соргучтар Бажы Биримдиктин Техникалык регламенттин талаптарына ылайыктуу декларацияланган: ТР ТБ 010/2011 «Жабдуу жана машиналардын коопсуздугу жөнүндө»; ТР ТБ 020/2011 «Техникалык каражаттардын электрмагниттик шайкештиги».

ARM

MTS

Շահագործման ձեռնարկ

Տվյալ սարքավորման շահագործման ձեռնարկը բաղկացած է մի քանի մասերից.
Մաս 1. սույն «Շահագործման ձեռնարկ»:
Մաս 2. Էլեկտրոնային մաս. այն է՝ «Անձնագիր: Մոնտաժման և շահագործման ձեռնարկ» տեղադրված «Գրունդֆոս». Անցեք փաստաթղթի վերջում նշված հղումով.
Մաս 3. տեղեկություն արտադրման ամսաթվի վերաբերյալ՝ նշված սարքավորման պիտակի վրա:

Համապատասխանության հավաստման մասին տեղեկություններ.
MTS տիպի պոմպերը հայտարարագրված են համաձայն Մաքսային Միության տեխնիկական կանոնակարգի պահանջների՝ TP TC 010/2011«Մեքենաների և սարքավորումների անվտանգության վերաբերյալ» ; TP TC 020/2011 «Տեխնիկական միջոցների էլեկտրամագնիսական համատեղելիության վերաբերյալ»:

http://net.grundfos.com/qr/i/99612567

10000270913	12.2025
ECM: 1439685	

Argentina
Bombas GRUNDFOS de Argentina S.A.
Ruta Panamericana km. 37.500industin
1619 - Garín Pcia. de B.A.
Tel.: +54-3327 414 444
Fax: +54-3327 45 3190

Australia
GRUNDFOS Pumps Pty. Ltd.
P.O. Box 2040
Regency Park
South Australia 5942
Tel.: +61-8-8461-4611
Fax: +61-8-8340-0155

Austria
GRUNDFOS Pumpen Vertrieb
Ges.m.b.H.
Grundfosstraße 2
A-5082 Grödig/Salzburg
Tel.: +43-6246-883-0
Fax: +43-6246-883-30

Belgium
N.V. GRUNDFOS Bellux S.A.
Boomsesteenweg 81-83
B-2630 Aartselaar
Tel.: +32-3-870 7300
Fax: +32-3-870 7301

Bosnia and Herzegovina
GRUNDFOS Sarajevo
Zmaja od Bosne 7-7A
BiH-71000 Sarajevo
Tel.: +387 33 592 480
Fax: +387 33 590 465
www.ba.grundfos.com
E-mail: grundfos@bih.net.ba

Brazil
BOMBAS GRUNDFOS DO BRASIL
Av. Humberto de Alencar Castelo
Branco, 630
CEP 09850 - 300
São Bernardo do Campo - SP
Tel.: +55-11 4393 5533
Fax: +55-11 4343 5015

Bulgaria
Grundfos Bulgaria EOOD
Slatina District
Iztochna Tangenta street no. 100
BG - 1592 Sofia
Tel.: +359 2 49 22 200
Fax: +359 2 49 22 201
E-mail: bulgaria@grundfos.bg

Canada
GRUNDFOS Canada inc.
2941 Brighton Road
Oakville, Ontario
L6H 6C9
Tel.: +1-905 829 9533
Fax: +1-905 829 9512

China
GRUNDFOS Pumps (Shanghai) Co. Ltd.
10F The Hub, No. 33 Suhong Road
Minhang District
Shanghai 201106 PRC
Tel.: +86 21 612 252 22
Fax: +86 21 612 253 33

Colombia
GRUNDFOS Colombia S.A.S.
Km 1.5 vía Siberia-Cota Conj. Potrero
Chico,
Parque Empresarial Arcos de Cota Bod.
1A.
Cota, Cundinamarca
Tel.: +57(1)-2913444
Fax: +57(1)-8764586

Croatia
GRUNDFOS CROATIA d.o.o.
Buzinski prilaz 38, Buzin
HR-10010 Zagreb
Tel.: +385 1 6595 400
Fax: +385 1 6595 499
www.hr.grundfos.com

Czech Republic
GRUNDFOS Sales Czechia and Slovakia
s.r.o.
Čajkovského 21
779 00 Olomouc
Tel.: +420-585-716 111

Denmark
GRUNDFOS DK A/S
Martin Bachs Vej 3
DK-8850 Bjerringbro
Tel.: +45-87 50 50 50
www.grundfos.com/DK

Estonia
SIA Grundfos Pumps Baltic Eesti filiaal
Priisle tee 10
13914 Tallinn
Tel.: + 372 606 1690
E-mail: estonia@sales.grundfos.com

Finland
OY GRUNDFOS Pumput AB
Trukkikuja 1
FI-01360 Vantaa
Tel.: +358-(0) 207 889 500

France
Pompes GRUNDFOS Distribution S.A.
Parc d'Activités de Chesnes
57, rue de Malacombe
F-38290 St. Quentin Fallavier (Lyon)
Tel.: +33-4 74 82 15 15
Fax: +33-4 74 94 10 51

Germany
GRUNDFOS GMBH
Schlüterstr. 33
40699 Erkrath
Tel.: +49-(0) 211 929 69-0
Fax: +49-(0) 211 929 69-3799
E-mail: infoservice@grundfos.de
Service in Deutschland:
kundendienst@grundfos.de

Greece
GRUNDFOS Hellas A.E.B.E.
20th km. Athinon-Markopoulou Av.
P.O. Box 71
GR-19002 Peania
Tel.: +0030-210-66 83 400
Fax: +0030-210-66 46 273

Hong Kong
GRUNDFOS Pumps (Hong Kong) Ltd.
Unit 1, Ground floor, Siu Wai industrial
Centre
29-33 Wing Hong Street & 68 King Lam
Street, Cheung Sha Wan
Kowloon
Tel.: +852-27861706 / 27861741
Fax: +852-27858664

Hungary
GRUNDFOS South East Europe Kft.
Tópark u. 8
H-2045 Törökbálint
Tel.: +36-23 511 110
Fax: +36-23 511 111

India
GRUNDFOS Pumps India Private
Limited
118 Old Mahabalipuram Road
Thoraipakkam
Chennai 600 097
Tel.: +91-44 2496 6800

Indonesia
PT GRUNDFOS Pompa
Graha intirub Lt. 2 & 3
Jln. Cililitan Besar No.454. Makasar,
Jakarta Timur
ID-Jakarta 13650
Tel.: +62 21-469-51900
Fax: +62 21-460 6910 / 460 6901

Ireland
GRUNDFOS (Ireland) Ltd.
Unit A, Merrywell Business Park
Ballymount Road Lower
Dublin 12
Tel.: +353-1-4089 800
Fax: +353-1-4089 830

Italy
GRUNDFOS Pompe Italia S.r.l.
Via Gran Sasso 4
I-20060 Truccazzano (Milano)
Tel.: +39-02-95838112
Fax: +39-02-95309290 / 95838461

Japan
GRUNDFOS Pumps K.K.
1-2-3, Shin-Miyakoda, Kita-ku
Hamamatsu
431-2103 Japan
Tel.: +81 53 428 4760
Fax: +81 53 428 5005

Kazakhstan
Grundfos Kazakhstan LLP
7' Kyz-Zhibek Str., Kok-Tobe micr.
KZ-050020 Almaty Kazakhstan
Tel.: +7 (727) 227-98-55/56

Korea
GRUNDFOS Pumps Korea Ltd.
6th Floor, Aju Building 679-5
Yeoksam-dong, Kangnam-ku, 135-916
Seoul, Korea
Tel.: +82-2-5317 600
Fax: +82-2-5633 725

Latvia
GRUNDFOS Pumps Baltic SIA
Gunāra Astras iela 8B
LV-1082, Rīga,
Tel.: + 371 671 49640
E-mail: latvia@sales.grundfos.com

Lithuania
SIA „GRUNDFOS PUMPS BALTIC“ Lietuvos filialas
Smolensko g. 6
LT-03201 Vilnius
Tel.: + 370 5 239 5430
E-mail: lithuania@sales.grundfos.com

Malaysia
GRUNDFOS Pumps Sdn. Bhd.
7 Jalan Peguam U1/25
Glenmarie industrial Park
40150 Shah Alam, Selangor
Tel.: +60-3-5569 2922
Fax: +60-3-5569 2866

Mexico
Bombas GRUNDFOS de México S.A. de C.V.
Boulevard TLC No. 15
Parque industrial Stiva Aeropuerto
Apodaca, N.L. 66600
Tel.: +52-81-8144 4000
Fax: +52-81-8144 4010

Netherlands
GRUNDFOS Netherlands
Veluwezoom 35
1326 AE Almere
Postbus 22015
1302 CA ALMERE
Tel.: +31-88-478 6336
Fax: +31-88-478 6332
E-mail: info_gnl@grundfos.com

New Zealand
GRUNDFOS Pumps NZ Ltd.
17 Beatrice Tinsley Crescent
North Harbour Industrial Estate
Albany, Auckland
Tel.: +64-9-415 3240
Fax: +64-9-415 3250

Norway
GRUNDFOS Pumper A/S
Strømsveien 344
Postboks 235, Leirdal
N-1011 Oslo
Tel.: +47-22 90 47 00
Fax: +47-22 32 21 50

Poland
GRUNDFOS Pompy Sp. z o.o.
ul. Klonowa 23
Baranowo k. Poznania
PL-62-081 Przeźmierowo
Tel.: (+48-61) 650 13 00
Fax: (+48-61) 650 13 50

Portugal
Bombas GRUNDFOS Portugal, S.A.
Rua Calvet de Magalhães, 241
Apartado 1079
P-2770-153 Paço de Arcos
Tel.: +351-21-440 76 00
Fax: +351-21-440 76 90

Romania
GRUNDFOS Pompe România SRL
S-PARK BUSINESS CENTER, Clădirea A2, etaj 2
Str. Tipografilor, Nr. 11-15, Sector 1, Cod 013714
Bucuresti, Romania
Tel.: 004 021 2004 100
E-mail: romania@grundfos.ro

Serbia
Grundfos Srbija d.o.o.
Omladinskih brigada 90b
11070 Novi Beograd
Tel.: +381 11 2258 740
Fax: +381 11 2281 769
www.rs.grundfos.com

Singapore
GRUNDFOS (Singapore) Pte. Ltd.
25 Jalan Tukang
Singapore 619264
Tel.: +65-6681 9688
Faxax: +65-6681 9689

Slovakia
GRUNDFOS s.r.o.
Prievozská 4D 821 09 BRATISLAVA
Tel.: +421 2 5020 1426
sk.grundfos.com

Slovenia
GRUNDFOS LJUBLJANA, d.o.o.
Leskoškova 9e, 1122 Ljubljana
Tel.: +386 (0) 1 568 06 10
Fax: +386 (0)1 568 06 19
E-mail: tehnika-si@grundfos.com

South Africa
GRUNDFOS (PTY) LTD
16 Lascelles Drive, Meadowbrook Estate
1609 Germiston, Johannesburg
Tel.: (+27) 10 248 6000
Fax: (+27) 10 248 6002
E-mail: lgradidge@grundfos.com

Spain
Bombas GRUNDFOS España S.A.
Camino de la Fuentecilla, s/n
E-28110 Algete (Madrid)
Tel.: +34-91-848 8800
Fax: +34-91-628 0465

Sweden
GRUNDFOS AB
Box 333 (Lunnagårdsgatan 6)
431 24 Mölndal
Tel.: +46 31 332 23 000
Fax: +46 31 331 94 60

Switzerland
GRUNDFOS Pumpen AG
Bruggacherstrasse 10
CH-8117 Fällanden/ZH
Tel.: +41-44-806 8111
Fax: +41-44-806 8115

Taiwan
GRUNDFOS Pumps (Taiwan) Ltd.
7 Floor, 219 Min-Chuan Road
Taichung, Taiwan, R.O.C.
Tel.: +886-4-2305 0868
Fax: +886-4-2305 0878

Thailand
GRUNDFOS (Thailand) Ltd.
92 Chaloem Phrakiat Rama 9 Road
Dokmai, Pravej, Bangkok 10250
Tel.: +66-2-725 8999
Fax: +66-2-725 8998

Turkey
GRUNDFOS POMPA San. ve Tic. Ltd. Sti.
Gebze Organize Sanayi Bölgesi
Ihsan dede Caddesi
2. yol 200. Sokak No. 204
41490 Gebze/ Kocaeli
Tel.: +90 - 262-679 7979
Fax: +90 - 262-679 7905
E-mail: satis@grundfos.com

Ukraine
ТОВ "ГРУНДФОС УКРАЇНА"
Бізнес Центр Європа
Столичне шосе, 103
м. Київ, 03131, Україна
Tel.: (+38 044) 237 04 00
Fax: (+38 044) 237 04 01
E-mail: ukraine@grundfos.com

United Arab Emirates
GRUNDFOS Gulf Distribution
P.O. Box 16768
Jebel Ali Free Zone, Dubai
Tel.: +971 4 8815 166
Fax: +971 4 8815 136

United Kingdom
GRUNDFOS Pumps Ltd.
Grovebury Road
Leighton Buzzard/Beds. LU7 4TL
Tel.: +44-1525-850000
Fax: +44-1525-850011

U.S.A.
Global Headquarters for WU
856 Koomey Road
Brookshire, Texas 77423 USA
Phone: +1-630-236-5500

Uzbekistan
Grundfos Tashkent, Uzbekistan
The Representative Office of Grundfos Kazakhstan in Uzbekistan
38a, Oybek street, Tashkent
Tel.: (+998) 71 150 3290 / 71 150 3291
Fax: (+998) 71 150 3292

© Grundfos Holding A/S 05.2026

93544337

ECM: 1445009	05.2026

Grundfos Holding A/S
Poul Due Jensens Vej 7
DK-8850 Bjerringbro
Tel: +45 87 50 14 00
www.grundfos.com