Data booklet

Hydro MPC

Supplement data booklet for Turkish range, systems with 2 to 6 pumps and GENIECON PANEL

GRUNDFOS

Table of contents

1. System introduction 3
System description 3

2. System data 4
Performance range 4
Product range. 6
Type key 7

3. Construction. 8

4. Performance curves and technical data. . . . 9
Hydro MPC-E with CRE, CRIE, CRNE 3 9
Hydro MPC-E with CRE, CRIE, CRNE 5 12
Hydro MPC-E with CRE, CIRE, CRNE 10 15
Hydro MPC-E with CRE, CRIE, CRNE 15 19
Hydro MPC-E with CRE, CRIE, CRNE 20 23
Hydro MPC-E with CRE, CRNE 32 27
Hydro MPC-E with CRE, CRNE 45 30
Hydro MPC-E with CRE, CRNE 64 33
Hydro MPC-EC with CR, CRN 64 36
Hydro MPC-E with CRE, CRNE 95 38
Hydro MPC-EC with CR, CRN 95 41
Hydro MPC-E with CRE, CRNE 125 43
Hydro MPC-EC with CR, CRN 125 46
Hydro MPC-E with CRE, CRNE 155 48
Hydro MPC-EC with CR, CRN 155 50

5. Document quality feedback. 52

1. System introduction

This data booklet includes information such as system description, performance curves, type key, curves, technical data, and related details. For information not specifically mentioned in this document, see the data booklet in the table below.

Title	Document type	QR code	Link	Publication number
Hydro MPC	Data booklet		*http://net.grundfos.com/qr/i/93242159*	93242159

System description

As standard, the system consists of two to six CR, CRE, CRIE, CRN or CRNE pumps.

The pumps are connected in parallel, and are mounted on a common base frame with a control panel and the necessary fittings, such as manifolds, non-return valves, isolating valves, pressure transmitters, pressure gauge, and so on.

A pilot pump can be added to the system with high variation in flow demand to maintain high efficiency at low flow. The pumps of the system can be removed without disturbing the pipework on either side of the manifolds.

The system is preconfigured and factory-tested.

Hydro MPC-E

- The system consists of two to six identical electronically speed-controlled CRE, CRIE or CRNE pumps.
- Each pump has an integrated frequency converter.
- The motor power ranges from 0.37 to 22 kW.
- The pipe connection ranges from R 2 to DN 400.

Hydro MPC-EC

- The system consists of two to six identical CR or CRN pumps.
- Each pump is connected to a Grundfos CUE frequency converter in the control panel.
- The motor power starts from 30 kW.
- The pipe connection ranges from DN 200 to DN 400.

2. System data

Performance range

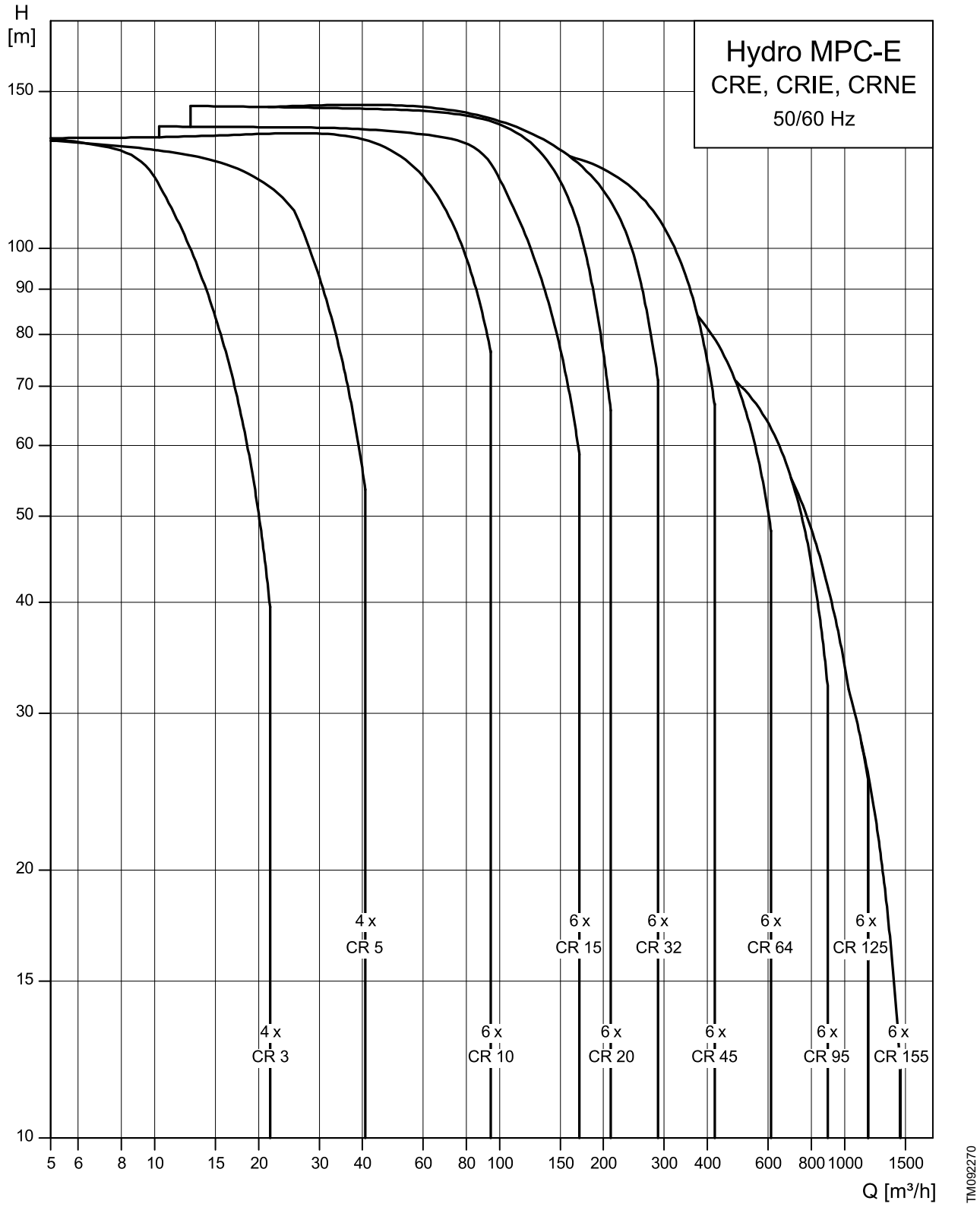

Hydro MPC-E

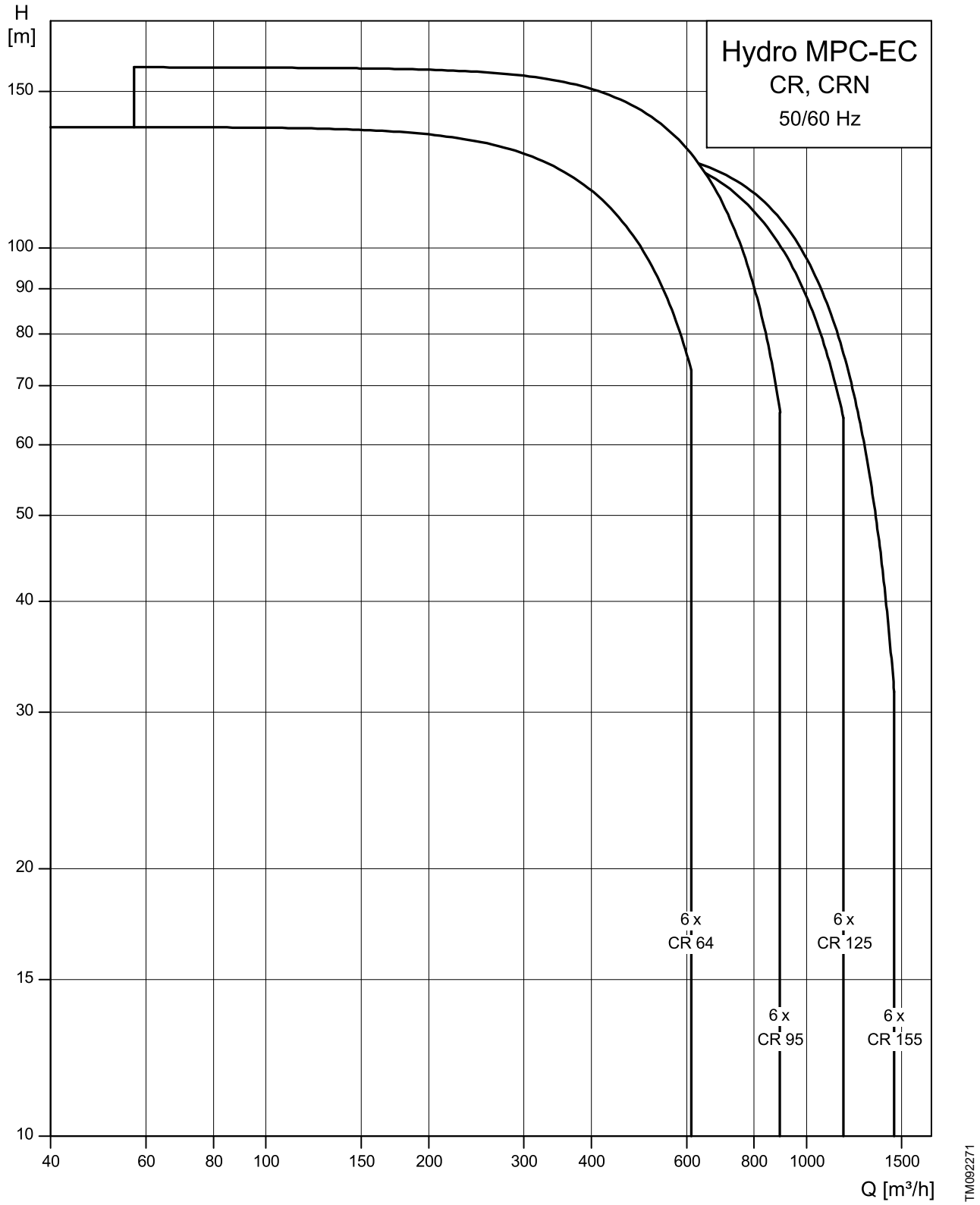
Hydro MPC-EC
CR, CRN
50/60 Hz
H
[m]
150
100
90
80
70
60
50
40
30
20
15
10
40
60
80
100
150
200
300
400
600
800
1000
1500
Q [m³/h]
6 x
CR 64
6 x
CR 95
6 x
CR 125
6 x
CR 155
TM092271

Hydro MPC-EC

Product range

System type	Hydro MPC-E	Hydro MPC-EC
Frequency	50/60 Hz	50/60 Hz
Number of pumps	2-6	2-6
Hydraulic data		
Maximum head [m]	50 Hz: 146 60 Hz: 155	50 Hz: 146 60 Hz: 155
Rated flow rate [m^3/h]	0-1836	0-1836
Liquid temperature [°C]	5-60	5-60
Ambient temperature [°C]	0-40	0-40
Relative humidity	90 %	90 %
Max. operating pressure [bar]	16	16
Motor data		
Motor power [kW]	0.37 - 22	30-55
Shaft seal	HQQE (SiC/SiC/EPDM)	HQQE (SiC/SiC/EPDM)
Pipe connection		
Union connection	R 2 - R 2 1/2	-
DIN flange	DN 80 - DN 400	DN 200 - DN 400

1) Systems for lower and higher temperature are available on request.

2) Systems with maximum operating pressure higher than 16 bar are available on request.

Legend

- Not applicable

Type key

Example: Hydro MPC-E 6 CRE155-1-1 V1 GD-A-D-ABC

Code	Explanation		Designation
Hydro MPC			System name
E	E: All pumps with E motors [3] X: Customized system type	EC: Fixed-speed main pumps with CUEs [4]	System type
6			Number of main pumps
CRE155-1-1			Pump type
V1	V1: 3 × 400 V, 50 Hz, N, PE V2: 3 × 400 V, 50 Hz, PE V3: 3 × 380 V, 50 Hz, N, PE V4: 3 × 380 V, 50 Hz, PE V5: 3 × 400 V, 60 Hz, N, PE V6: 3 × 400 V, 60 Hz, PE V7: 3 × 380 V, 60 Hz, N, PE V8: 3 × 380 V, 60 Hz, PE V9: 3 × 440 V, 60 Hz, N, PE VA: 3 × 440 V, 60 Hz, PE VB: 3 × 220 V, 60 Hz, N, PE VC: 3 × 220 V, 60 Hz, PE VD: 1 × 208 V, 60 Hz, PE	VE: 3 × 208 V, 60 Hz, PE VF: 3 × 230 V, 60 Hz, PE VG: 3 × 460 V, 60 Hz, N, PE VH: 3 × 460 V, 60 Hz, PE VJ: 3 × 575 V, 60 Hz, PE VK: 3 × 415 V, 50 Hz, N, PE VL: 3 × 415 V, 50 Hz, PE VM: 1 × 240 V, 50 Hz, N, PE VN: 1 × 230 V, 50 Hz, N, PE VQ: 1 × 230 V, 60 Hz, PE VR: 3 × 200 V, 50 Hz, PE VS: 3 × 200 V, 60 Hz, PE VX: Customized variant (special voltage rating)	Voltage code
GD	GA: Systems with GENIECON PANEL mounted on the same base frame as the pumps GC: Systems with GENIECON PANEL mounted on its own base for floor mounting [5] GD: Systems with GENIECON PANEL mounted on its own base frame [5] GE: APAC design, systems with GENIECON PANEL mounted on the same base frame as the pumps GG: APAC design, systems with GENIECON PANEL mounted on its own base for floor mounting [5] GH: APAC design, systems with GENIECON PANEL mounted on its own base frame [5] GW: Systems with GENIECON PANEL prepared for wall mounting [5] GX: Systems with GENIECON PANEL, customized mounting		Design
A	A: E B: DOL	C: SD	Starting method
D	A: Stainless steel manifold and base frame(s) with standard valves B: Stainless steel manifold and base frame(s) with valves C: Galvanized steel manifold and base frame(s) with standard valves D: Stainless steel manifold and galvanized steel base frame(s) with standard valves G: Galvanized steel manifold and galvanized steel base frame with local valves H: Galvanized steel manifold and black painted base frame(s) with standard valves I: Stainless steel manifold and black painted base frame(s) with standard valves J: Black coated mild steel manifold and base frame(s) with standard valves P: Stainless steel manifold and galvanized steel base frame with local valves X: Customized material combination		Material combination
ABC	A: Standard hydraulic B: Pilot pump C: Bypass D: Non-return valve on inlet E: Elbow manifold F: No inlet manifold G: Diaphragm tank H: Redundant inlet-pressure sensor I: Repair switch J: Redundant outlet-pressure sensor K: 1 free pump position L: 2 free pump positions M: 3 free pump positions	N: PN 10 pressure rating O: PN 25 pressure rating P: Low prepressure (NPSH) Q: PN 40 pressure rating R: Non-standard RPM S: Customized variant T: Certificate U: Undersized motor V: Standard controls with options W: Customized controls X: More than three options Y: Control panel with double door	Option

[3] Integrated frequency converter, one per pump

[4] Grundfos CUE frequency converter, one per pump

[5] Maximum 3 m between GENIECON PANEL and pumps

3. Construction

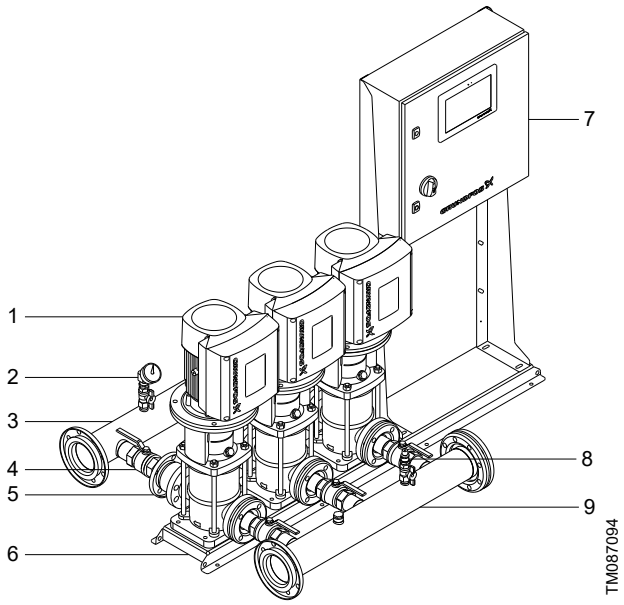

System structure

Pos.	Description	Quantity
1	Pump	2-6
2	Outlet-pressure sensor and pressure gauge	1
3	Outlet manifold	1
4	Isolating valve	2 per pump
5	Non-return valve	1 per pump
6	Base frame	1-2
7	Control panel	1
8	Inlet-pressure sensor	1 (optional)
9	Inlet manifold	1

System components

The system has a base frame fitted with the components listed below.

Components fitted on the inlet side are the following:

- inlet manifold
- one isolating valve per pump.

Components fitted on the outlet side are the following:

- outlet manifold
- one non-return valve per pump
- one isolating valve per pump
- outlet-pressure sensor and pressure gauge.

The system is fitted with a control panel to control and monitor the system.

Optionally, the system can be fitted with a diaphragm tank on the outlet side and an inlet-pressure sensor on the inlet side.

4. Performance curves and technical data

Hydro MPC-E with CRE, CRIE, CRNE 3

Curve charts

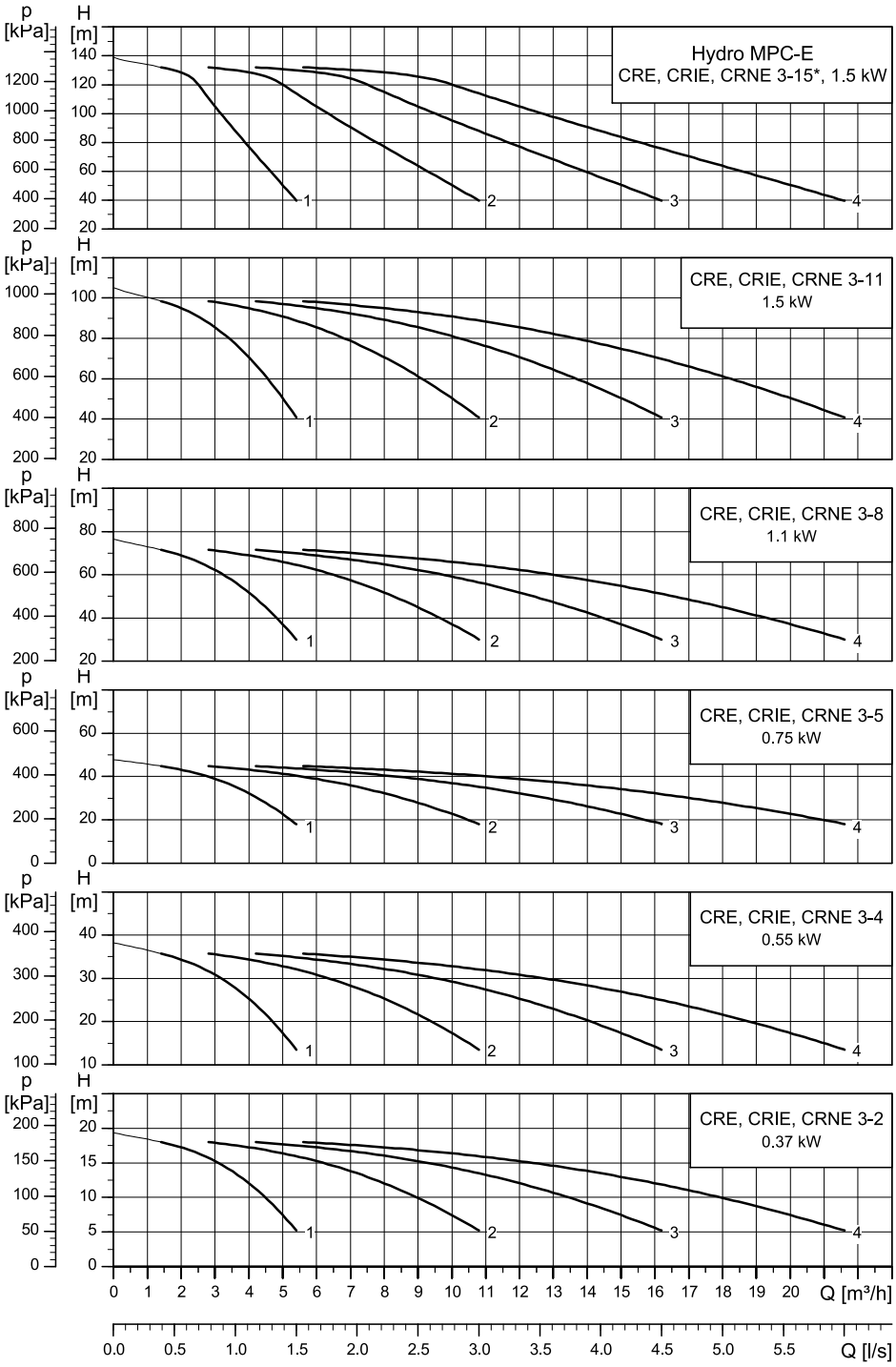

* For undersized motors, the maximum speed depends on the power usage.
Losses in fittings and valves are not included.

Dimensional sketch

Below is the dimensional sketch of the presented system in different designs. The system is shown as an example. The pumps and panel supplied may differ from the sketch.

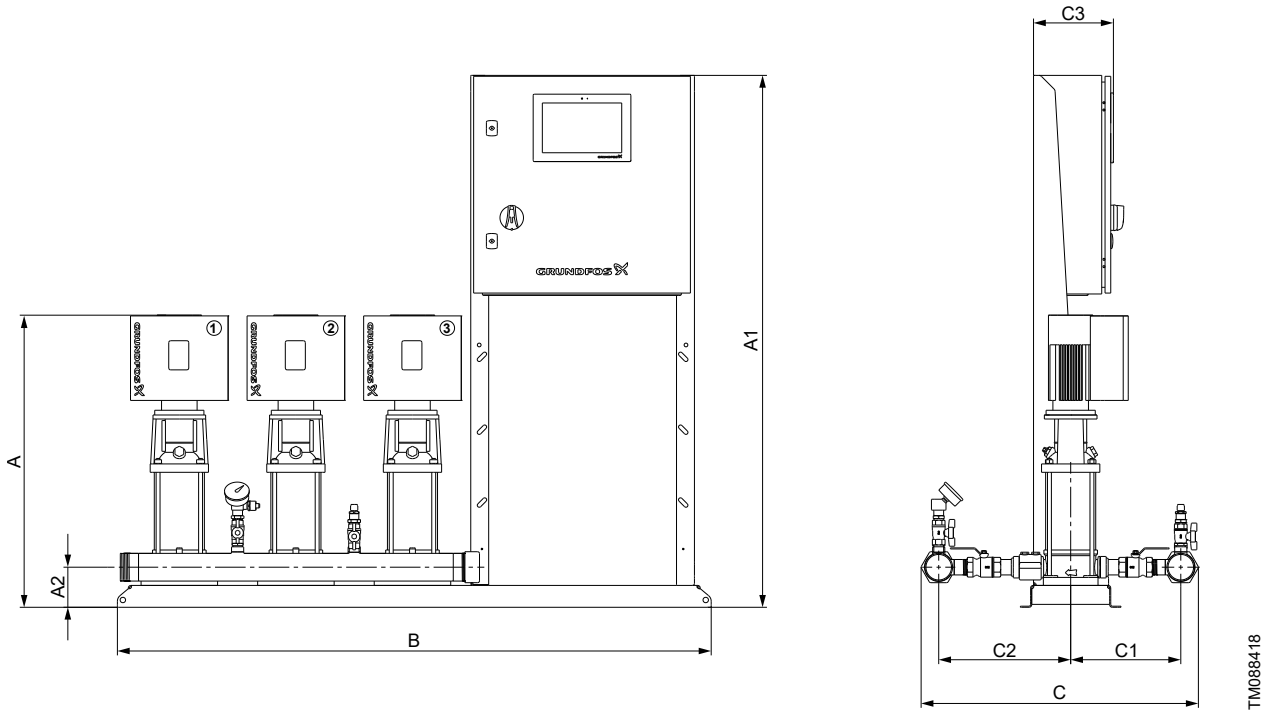

Design GA

Electrical data, dimensions and weights

Number of pumps	Pump type	Motor power [kW]	Motor type	Voltage code	Rated current [A]	Connections	A [mm]	A1 [mm]	A2 [mm]	B [mm]	B1 [mm]	C [mm]	C1 [mm]	C2 [mm]	C3 [mm]	Net weight [kg]	Design
2	CRE, CRIE, CRNE 3-2	0.37	❍	V1	2.4	R 2	533	1460	112	1050	-	726	295	355	200	89	GA
	CRE, CRIE, CRNE 3-4	0.55	❍	V1	3.45	R 2	551	1460	112	1050	-	726	295	355	200	90	GA
	CRE, CRIE, CRNE 3-5	0.75	❍	V1	4.7	R 2	575	1460	112	1050	-	726	295	355	200	94	GA
	CRE, CRIE, CRNE 3-8	1.1	❍	V1	6.7	R 2	629	1460	112	1050	-	726	295	355	200	98	GA
	CRE, CRIE, CRNE 3-11	1.5	●	V1	6.4	R 2	759	1460	112	1050	-	726	295	355	200	108	GA
	CRE, CRIE, CRNE 3-15 [6)]	1.5	●	V1	6.4	R 2	831	1460	112	1050	-	726	295	355	200	112	GA
3	CRE, CRIE, CRNE 3-2	0.37	❍	V1	2.4	R 2	533	1460	112	1350	-	726	295	355	200	117	GA
	CRE, CRIE, CRNE 3-4	0.55	❍	V1	3.45	R 2	551	1460	112	1350	-	726	295	355	200	119	GA
	CRE, CRIE, CRNE 3-5	0.75	❍	V1	4.7	R 2	575	1460	112	1350	-	726	295	355	200	124	GA
	CRE, CRIE, CRNE 3-8	1.1	❍	V1	6.7	R 2	629	1460	112	1350	-	726	295	355	200	130	GA
	CRE, CRIE, CRNE 3-11	1.5	●	V1	9.3	R 2	759	1460	112	1350	-	726	295	355	200	147	GA
	CRE, CRIE, CRNE 3-15 [6)]	1.5	●	V1	9.3	R 2	831	1460	112	1350	-	726	295	355	200	152	GA
4	CRE, CRIE, CRNE 3-2	0.37	❍	V1	4.8	R 2 1/2	533	1460	112	1890	-	741	295	355	200	159	GA
	CRE, CRIE, CRNE 3-4	0.55	❍	V1	6.9	R 2 1/2	551	1460	112	1890	-	741	295	355	200	161	GA
	CRE, CRIE, CRNE 3-5	0.75	❍	V1	9.4	R 2 1/2	575	1460	112	1890	-	741	295	355	200	169	GA
	CRE, CRIE, CRNE 3-8	1.1	❍	V1	12.6	R 2 1/2	629	1460	112	1890	-	741	295	355	200	177	GA
	CRE, CRIE, CRNE 3-11	1.5	●	V1	12.1	R 2 1/2	759	1460	112	1670	-	741	295	355	200	188	GA
	CRE, CRIE, CRNE 3-15 [6)]	1.5	●	V1	12.1	R 2 1/2	831	1460	112	1670	-	741	295	355	200	195	GA

6) Pump with undersized motor

Legend

● Three-phase motors

❍ Single-phase motors

- Not applicable

Additional notes

- Motor power is the power per pump.
- Depending on the design, the control circuit may require additional current beyond the rated value.
- Voltage code V1 refers to the following: 3 × 400 V ± 5 %, 50 Hz, N, PE.
- Design GA indicates that the pumps and the control panel are mounted on the same base frame.
- Dimensions may vary by ±20 mm.

Hydro MPC-E with CRE, CRIE, CRNE 5

Curve charts

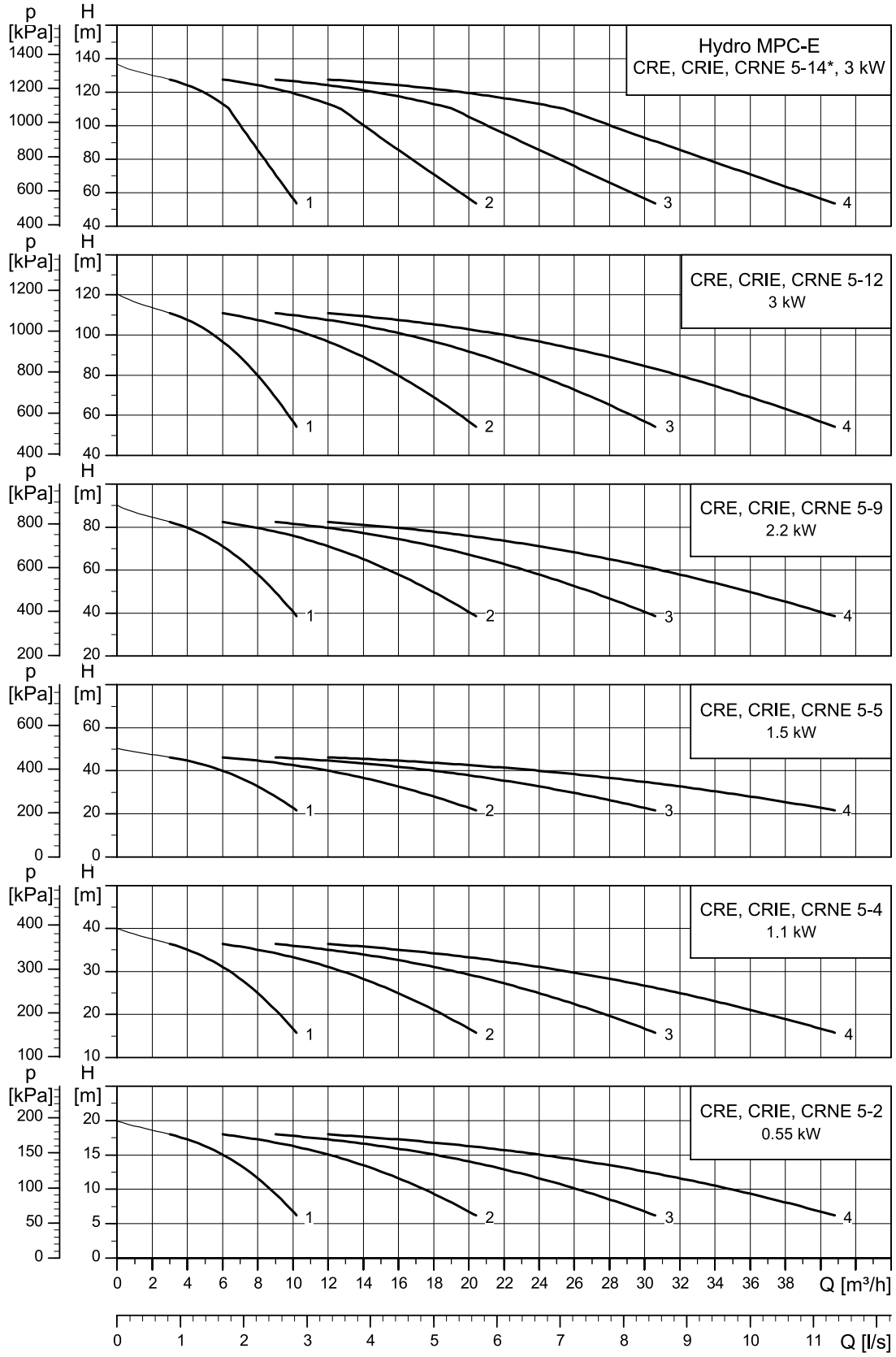

* For undersized motors, the maximum speed depends on the power usage.
Losses in fittings and valves are not included.

Dimensional sketch

Below is the dimensional sketch of the presented system in different designs. The system is shown as an example. The pumps and panel supplied may differ from the sketch.

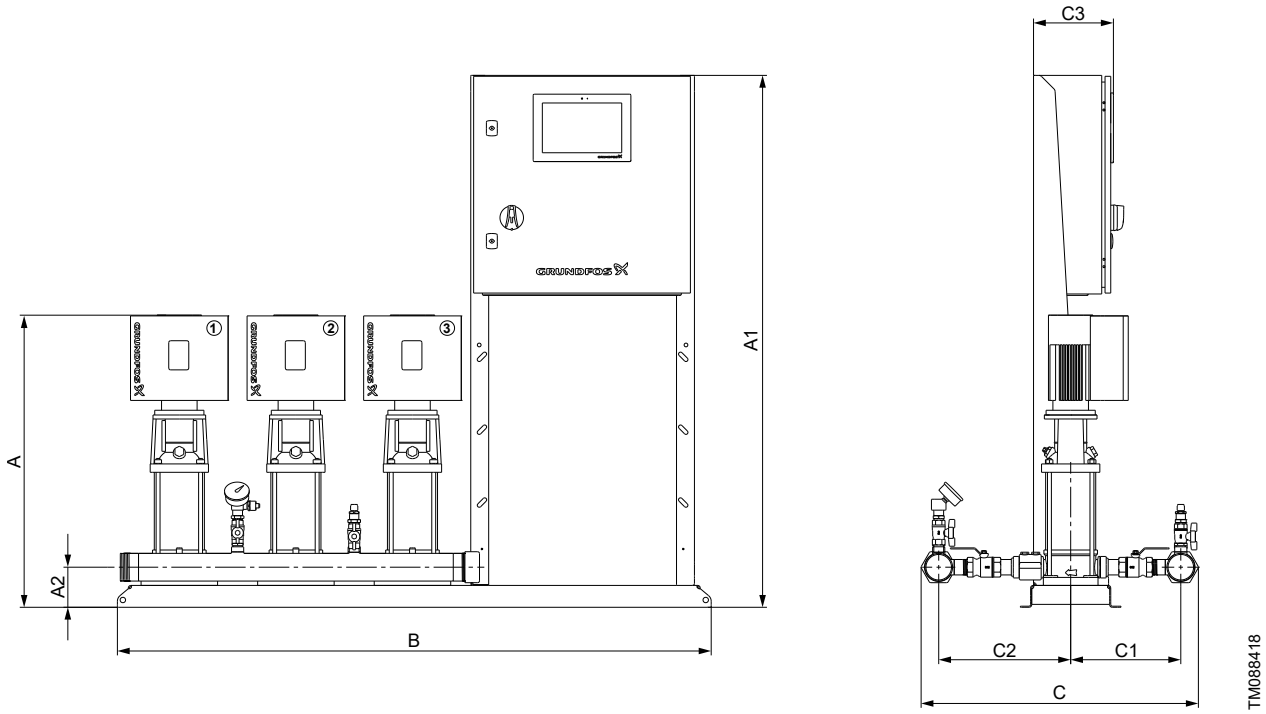

Design GA

Electrical data, dimensions and weights

Number of pumps	Pump type	Motor power [kW]	Motor type	Voltage code	Rated current [A]	Connections	A [mm]	A1 [mm]	A2 [mm]	B [mm]	B1 [mm]	C [mm]	C1 [mm]	C2 [mm]	C3 [mm]	Net weight [kg]	Design
2	CRE, CRIE, CRNE 5-2	0.55	❍	V1	3.45	R 2	533	1460	112	1050	-	726	295	355	200	89	GA
	CRE, CRIE, CRNE5-4	1.1	❍	V1	6.7	R 2	593	1460	112	1050	-	726	295	355	200	96	GA
	CRE, CRIE, CRNE 5-5	1.5	❍	V1	6.4	R 2	696	1460	112	1050	-	726	295	355	200	105	GA
	CRE, CRIE, CRNE 5-9	2.2	●	V1	8.9	R 2	804	1460	112	1050	-	726	295	355	200	113	GA
	CRE, CRIE, CRNE 5-12	3	●	V1	12.1	R 2	950	1460	112	1050	-	726	295	355	200	130	GA
	CRE, CRIE, CRNE 5-14 [7]	3	●	V1	12.1	R 2	1004	1460	112	1050	-	726	295	355	200	133	GA
3	CRE, CRIE, CRNE 5-2	0.55	❍	V1	3.45	R 2	533	1460	112	1350	-	726	295	355	200	117	GA
	CRE, CRIE, CRNE5-4	1.1	❍	V1	6.7	R 2	593	1460	112	1350	-	726	295	355	200	127	GA
	CRE, CRIE, CRNE 5-5	1.5	❍	V1	9.3	R 2	696	1460	112	1350	-	726	295	355	200	142	GA
	CRE, CRIE, CRNE 5-9	2.2	●	V1	12.9	R 2	804	1460	112	1570	-	726	295	355	200	164	GA
	CRE, CRIE, CRNE 5-12	3	●	V1	17.7	R 2	950	1460	112	1350	-	726	295	355	200	179	GA
	CRE, CRIE, CRNE 5-14*	3	●	V1	17.7	R 2	1004	1460	112	1350	-	726	295	355	200	183	GA
4	CRE, CRIE, CRNE 5-2	0.55	❍	V1	6.9	R 2 1/2	533	1460	112	1890	-	741	295	355	200	160	GA
	CRE, CRIE, CRNE5-4	1.1	❍	V1	12.6	R 2 1/2	593	1460	112	1890	-	741	295	355	200	173	GA
	CRE, CRIE, CRNE 5-5	1.5	❍	V1	12.1	R 2 1/2	696	1460	112	1670	-	741	295	355	200	182	GA
	CRE, CRIE, CRNE 5-9	2.2	●	V1	16.9	R 2 1/2	804	1460	112	1890	-	741	295	355	200	208	GA
	CRE, CRIE, CRNE 5-12	3	●	V1	23.3	R 2 1/2	950	1460	112	1670	-	741	295	355	200	231	GA
	CRE, CRIE, CRNE 5-14*	3	●	V1	23.3	R 2 1/2	1004	1460	112	1670	-	741	295	355	200	236	GA

[7] Pump with undersized motor

Legend

● Three-phase motors

❍ Single-phase motors

- Not applicable

Additional notes

- Motor power is the power per pump.
- Depending on the design, the control circuit may require additional current beyond the rated value.
- Voltage code V1 refers to the following: 3 × 400 V ± 5 %, 50 Hz, N, PE.
- Design GA indicates that the pumps and the control panel are mounted on the same base frame.
- Dimensions may vary by ±20 mm.

Hydro MPC-E with CRE, CIRE, CRNE 10

Curve charts

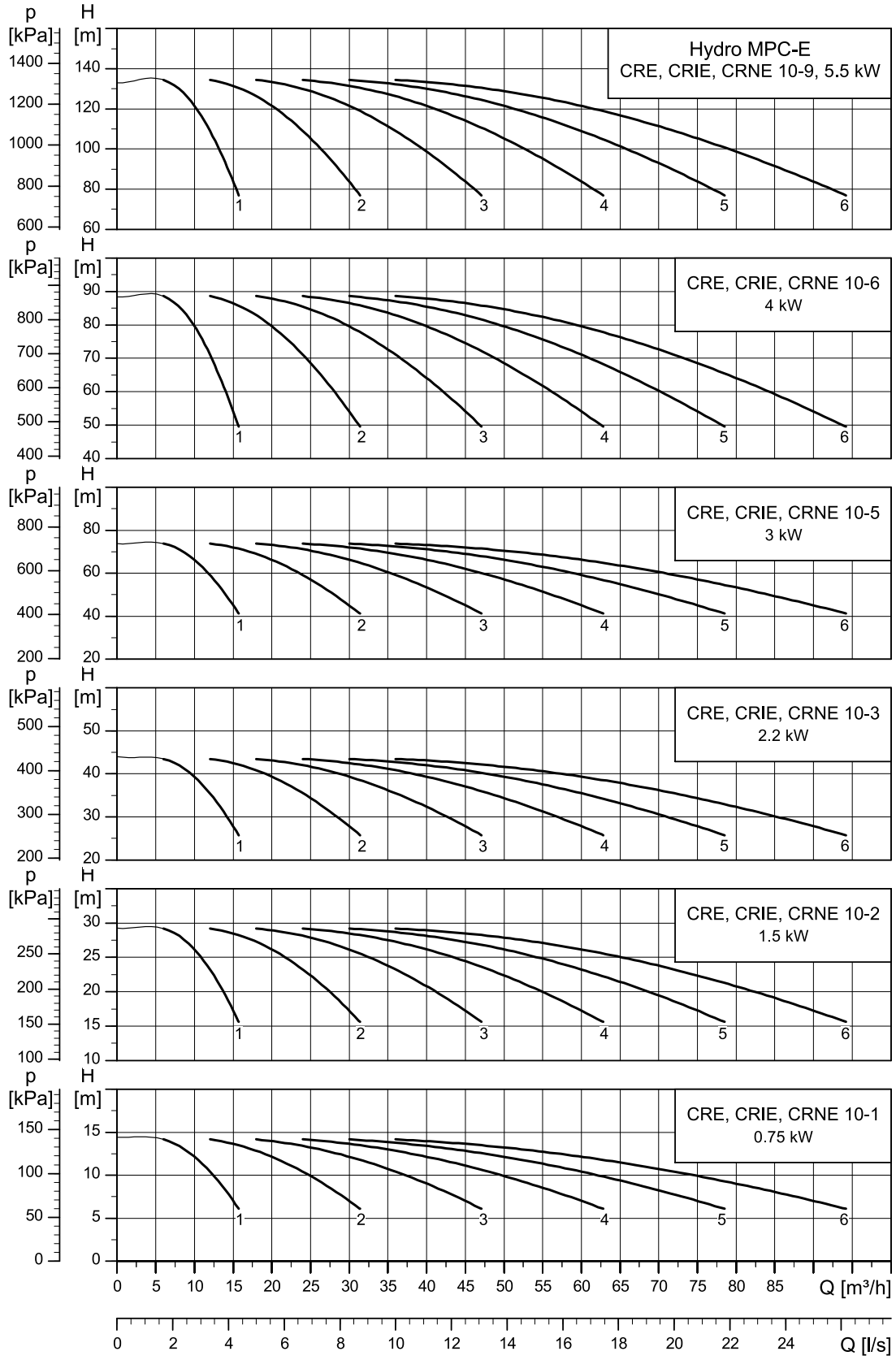

Losses in fittings and valves are not included.

Dimensional sketch

Below is the dimensional sketch of the presented system in different designs. The system is shown as an example. The pumps and panel supplied may differ from the sketch.

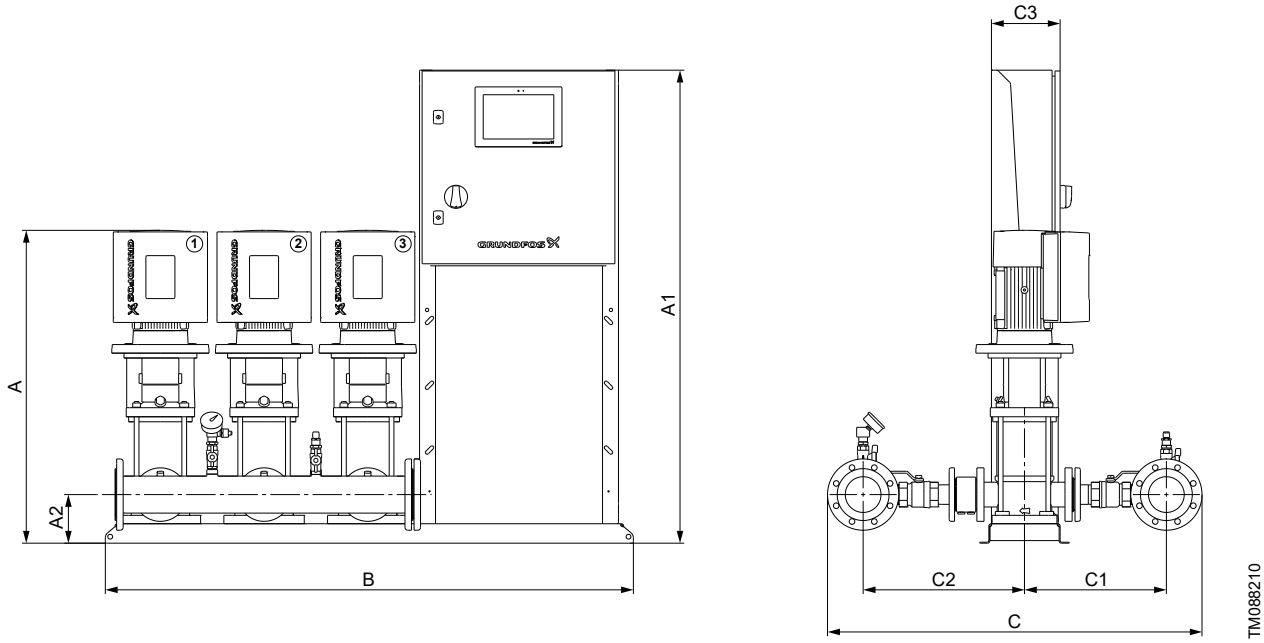

Design GA

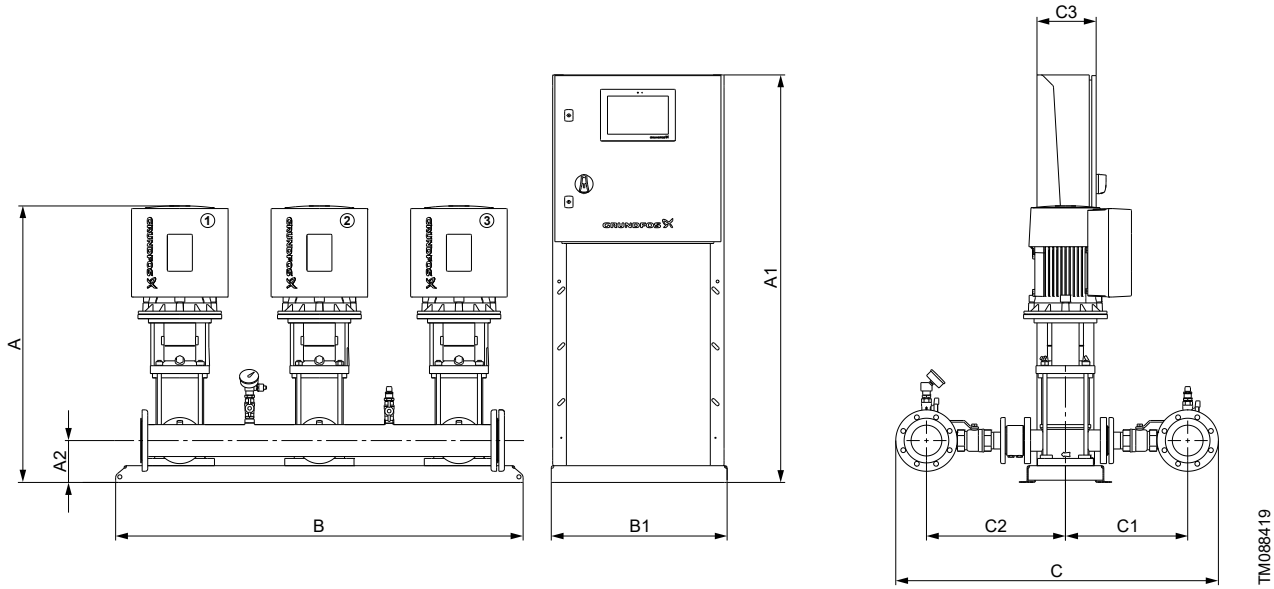

Design GD

Electrical data, dimensions and weights

Number of pumps	Pump type	Motor power [kW]	Motor type	Voltage code	Rated current [A]	Connections	A [mm]	A1 [mm]	A2 [mm]	B [mm]	B1 [mm]	C [mm]	C1 [mm]	C2 [mm]	C3 [mm]	Net weight [kg]	Design
2	CRE, CRIE, CRNE 10-1	0.75	❍	V1	4.7	R 2 1/2	633	1460	142	1080	-	891	371	431	200	125	GA
	CRE, CRIE, CRNE 10-2	1.5	●	V1	6.4	R 2 1/2	709	1460	142	1080	-	891	371	431	200	137	GA
	CRE, CRIE, CRNE 10-3	2.2	●	V1	8.9	R 2 1/2	739	1460	142	1080	-	891	371	431	200	143	GA
	CRE, CRIE, CRNE 10-5	3	●	V1	12.1	R 2 1/2	864	1460	142	1080	-	891	371	431	200	159	GA
	CRE, CRIE, CRNE 10-6	4	●	V1	15.5	R 2 1/2	894	1460	142	1080	-	891	371	431	200	167	GA
	CRE, CRIE, CRNE 10-9	5.5	●	V1	20.7	R 2 1/2	1047	1460	142	1080	-	891	371	431	200	216	GA
3	CRE, CRIE, CRNE 10-1	0.75	❍	V1	4.7	DN 80	633	1460	142	1380	-	1000	371	431	200	186	GA
	CRE, CRIE, CRNE 10-2	1.5	●	V1	9.3	DN 80	709	1460	142	1380	-	1000	371	431	200	205	GA
	CRE, CRIE, CRNE 10-3	2.2	●	V1	12.9	DN 80	739	1460	142	1600	-	1000	371	431	200	225	GA
	CRE, CRIE, CRNE 10-5	3	●	V1	17.7	DN 80	864	1460	142	1380	-	1000	371	431	200	238	GA
	CRE, CRIE, CRNE 10-6	4	●	V1	22.9	DN 80	894	1460	142	1600	-	1000	371	431	200	262	GA
	CRE, CRIE, CRNE 10-9	5.5	●	V1	30.7	DN 80	1047	1460	142	1600	-	1000	371	431	200	334	GA
4	CRE, CRIE, CRNE 10-1	0.75	❍	V1	9.4	DN 80	633	1460	142	1920	-	1000	371	431	200	244	GA
	CRE, CRIE, CRNE 10-2	1.5	●	V1	12.1	DN 80	709	1460	142	1700	-	1000	371	431	200	257	GA
	CRE, CRIE, CRNE 10-3	2.2	●	V1	16.9	DN 80	739	1460	142	1920	-	1000	371	431	200	281	GA
	CRE, CRIE, CRNE 10-5	3	●	V1	23.3	DN 80	864	1460	142	1700	-	1000	371	431	200	301	GA
	CRE, CRIE, CRNE 10-6	4	●	V1	30.3	DN 80	894	1460	142	1920	-	1000	371	431	200	329	GA
	CRE, CRIE, CRNE 10-9	5.5	●	V1	40.6	DN 80	1047	1460	142	1920	-	1000	371	431	200	426	GA
5	CRE, CRIE, CRNE 10-1	0.75	❍	V1	9.4	DN 100	633	1460	142	1642	410	1020	371	431	200	301	GD
	CRE, CRIE, CRNE 10-2	1.5	●	V1	14.9	DN 100	709	1460	142	1642	630	1020	371	431	300	333	GD
	CRE, CRIE, CRNE 10-3	2.2	●	V1	21	DN 100	739	1460	142	1642	630	1020	371	431	300	348	GD
	CRE, CRIE, CRNE 10-5	3	●	V1	29	DN 100	864	1460	142	1642	630	1020	371	431	300	388	GD
	CRE, CRIE, CRNE 10-6	4	●	V1	37.7	DN 100	894	1460	142	1642	630	1020	371	431	300	410	GD
	CRE, CRIE, CRNE 10-9	5.5	●	V1	50.6	DN 100	1047	1460	142	1642	630	1020	371	431	300	531	GD
6	CRE, CRIE, CRNE 10-1	0.75	❍	V1	9.4	DN 100	633	1460	142	1962	630	1020	371	431	300	354	GD
	CRE, CRIE, CRNE 10-2	1.5	●	V1	17.7	DN 100	709	1460	142	1962	630	1020	371	431	300	392	GD
	CRE, CRIE, CRNE 10-3	2.2	●	V1	25	DN 100	739	1460	142	1962	630	1020	371	431	300	410	GD
	CRE, CRIE, CRNE 10-5	3	●	V1	34.6	DN 100	864	1460	142	1962	630	1020	371	431	300	458	GD
	CRE, CRIE, CRNE 10-6	4	●	V1	45	DN 100	894	1460	142	1962	630	1020	371	431	300	484	GD
	CRE, CRIE, CRNE 10-9	5.5	●	V1	60.5	DN 100	1047	1460	142	1962	630	1020	371	431	300	631	GD

Legend

● Three-phase motors

❍ Single-phase motors

- Not applicable

Additional notes

- Motor power is the power per pump.
- Depending on the design, the control circuit may require additional current beyond the rated value.
- Voltage code V1 refers to the following: 3 × 400 V ± 5 %, 50 Hz, N, PE.
- Design GA indicates that the pumps and the control panel are mounted on the same base frame.
- Design GD indicates that the pumps and the control panel are mounted on their own base frames. The base frames are separated. The control panel can be placed up to 3 meters from the pumps.
- Dimensions may vary by ±20 mm.

Hydro MPC-E with CRE, CRIE, CRNE 15

Curve charts

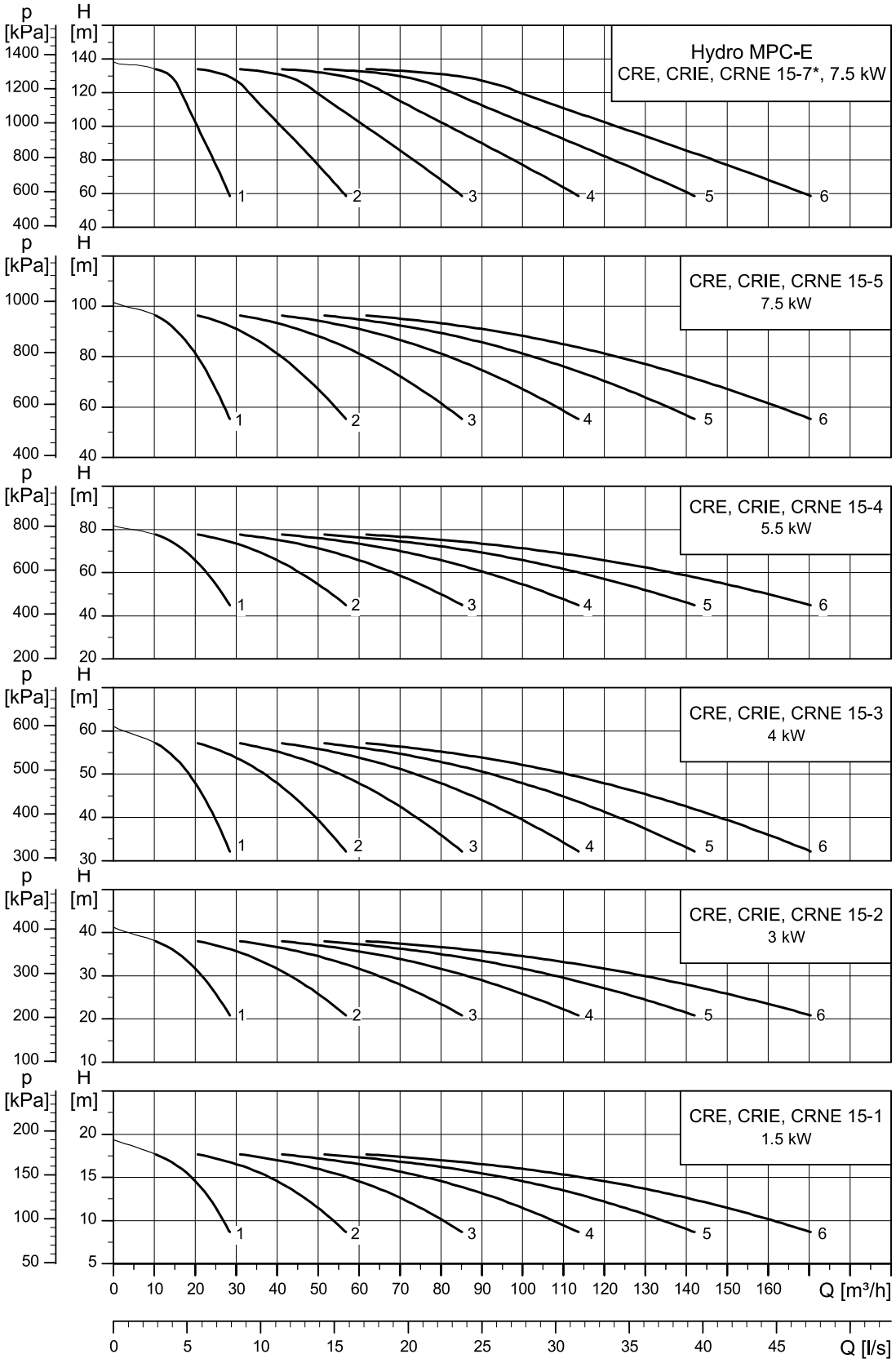

* For undersized motors, the maximum speed depends on the power usage.
Losses in fittings and valves are not included.

Dimensional sketch

Below is the dimensional sketch of the presented system in different designs. The system is shown as an example. The pumps and panel supplied may differ from the sketch.

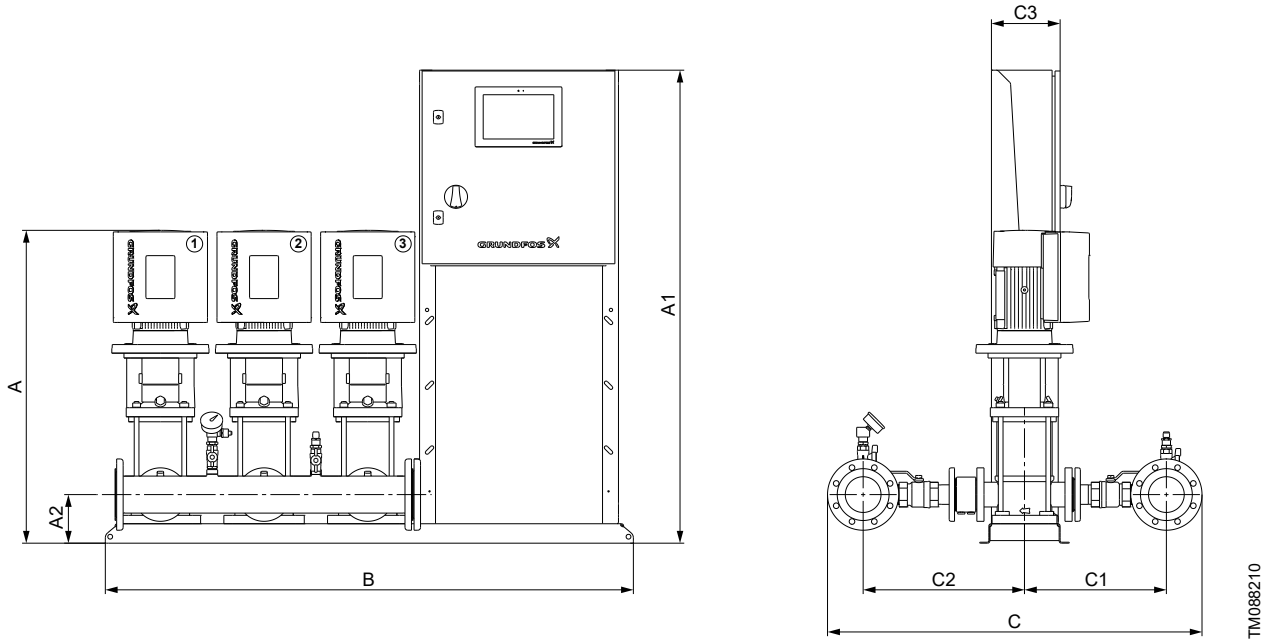

Design GA

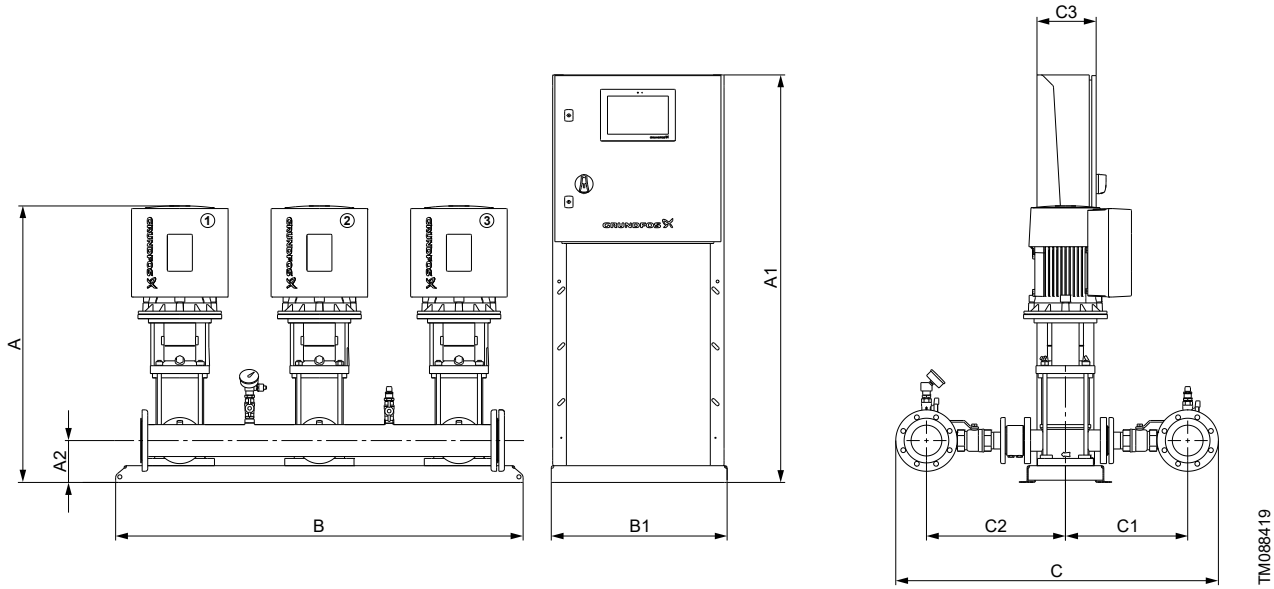

Design GD

Electrical data, dimensions and weights

Number of pumps	Pump type	Motor power [kW]	Motor type	Voltage code	Rated current [A]	Connections	A [mm]	A1 [mm]	A2 [mm]	B [mm]	B1 [mm]	C [mm]	C1 [mm]	C2 [mm]	C3 [mm]	Net weight [kg]	Design
2	CRE, CRIE, CRNE 15-1	1.5	●	V1	6.4	DN 80	749	1460	152	1110	-	1135	438	497	200	164	GA
	CRE, CRIE, CRNE 15-2	3	●	V1	12.1	DN 80	814	1460	152	1110	-	1135	438	497	200	182	GA
	CRE, CRIE, CRNE 15-3	4	●	V1	15.5	DN 80	859	1460	152	1110	-	1135	438	497	200	191	GA
	CRE, CRIE, CRNE 15-4	5.5	●	V1	20.7	DN 80	967	1460	152	1110	-	1135	438	497	200	235	GA
	CRE, CRIE, CRNE 15-5	7.5	●	V1	28	DN 80	1036	1460	152	1022	410	1135	438	497	200	275	GD
	CRE, CRIE, CRNE 15-7 [8)]	7.5	●	V1	28	DN 80	1126	1460	152	1022	410	1135	438	497	200	281	GD
3	CRE, CRIE, CRNE 15-1	1.5	●	V1	9.3	DN 100	749	1460	152	1410	-	1155	438	497	200	227	GA
	CRE, CRIE, CRNE 15-2	3	●	V1	17.7	DN 100	814	1460	152	1410	-	1155	438	497	200	254	GA
	CRE, CRIE, CRNE 15-3	4	●	V1	22.9	DN 100	859	1460	152	1630	-	1155	438	497	200	277	GA
	CRE, CRIE, CRNE 15-4	5.5	●	V1	30.7	DN 100	967	1460	152	1630	-	1155	438	497	200	343	GA
	CRE, CRIE, CRNE 15-5	7.5	●	V1	41.7	DN 100	1036	1460	152	1522	410	1155	438	497	200	388	GD
	CRE, CRIE, CRNE 15-7 [8)]	7.5	●	V1	41.7	DN 100	1126	1460	152	1522	410	1155	438	497	200	397	GD
4	CRE, CRIE, CRNE 15-1	1.5	●	V1	12.1	DN 100	749	1460	152	1730	-	1155	438	497	200	285	GA
	CRE, CRIE, CRNE 15-2	3	●	V1	23.3	DN 100	814	1460	152	1730	-	1155	438	497	200	321	GA
	CRE, CRIE, CRNE 15-3	4	●	V1	30.3	DN 100	859	1460	152	1950	-	1155	438	497	200	349	GA
	CRE, CRIE, CRNE 15-4	5.5	●	V1	40.6	DN 100	967	1460	152	1950	-	1155	438	497	200	438	GA
	CRE, CRIE, CRNE 15-5	7.5	●	V1	55.3	DN 100	1036	1460	152	2022	410	1155	438	497	200	497	GD
	CRE, CRIE, CRNE 15-7 [8)]	7.5	●	V1	55.3	DN 100	1126	1460	152	2022	410	1155	438	497	200	509	GD
5	CRE, CRIE, CRNE 15-1	1.5	●	V1	14.9	DN 150	749	1460	152	1704	630	1220	438	497	300	389	GD
	CRE, CRIE, CRNE 15-2	3	●	V1	29	DN 150	814	1460	152	1704	630	1220	438	497	300	434	GD
	CRE, CRIE, CRNE 15-3	4	●	V1	37.7	DN 150	859	1460	152	1704	630	1220	438	497	300	456	GD
	CRE, CRIE, CRNE 15-4	5.5	●	V1	50.6	DN 150	967	1460	152	1704	630	1220	438	497	300	567	GD
	CRE, CRIE, CRNE 15-5	7.5	●	V1	68.9	DN 150	1036	1460	152	2524	630	1220	438	497	300	648	GD
	CRE, CRIE, CRNE 15-7 [8)]	7.5	●	V1	68.9	DN 150	1126	1460	152	2524	630	1220	438	497	300	663	GD
6	CRE, CRIE, CRNE 15-1	1.5	●	V1	17.7	DN 150	749	1460	152	2024	630	1220	438	497	300	450	GD
	CRE, CRIE, CRNE 15-2	3	●	V1	34.6	DN 150	814	1460	152	2024	630	1220	438	497	300	504	GD
	CRE, CRIE, CRNE 15-3	4	●	V1	45	DN 150	859	1460	152	2024	630	1220	438	497	300	530	GD
	CRE, CRIE, CRNE 15-4	5.5	●	V1	60.5	DN 150	967	1460	152	2024	630	1220	438	497	300	664	GD
	CRE, CRIE, CRNE 15-5	7.5	●	V1	82.5	DN 150	1036	1460	152	3024	830	1220	438	497	300	766	GD
	CRE, CRIE, CRNE 15-7 [8)]	7.5	●	V1	82.5	DN 150	1126	1460	152	3024	830	1220	438	497	300	784	GD

[8)] Pump with undersized motor

Legend

● Three-phase motors

- Not applicable

Additional notes

- Motor power is the power per pump.
- Depending on the design, the control circuit may require additional current beyond the rated value.
- Voltage code V1 refers to the following: 3 × 400 V ± 5 %, 50 Hz, N, PE.
- Design GA indicates that the pumps and the control panel are mounted on the same base frame.
- Design GD indicates that the pumps and the control panel are mounted on their own base frames. The base frames are separated. The control panel can be placed up to 3 meters from the pumps.
- Dimensions may vary by ±20 mm.

Hydro MPC-E with CRE, CRIE, CRNE 20

Curve charts

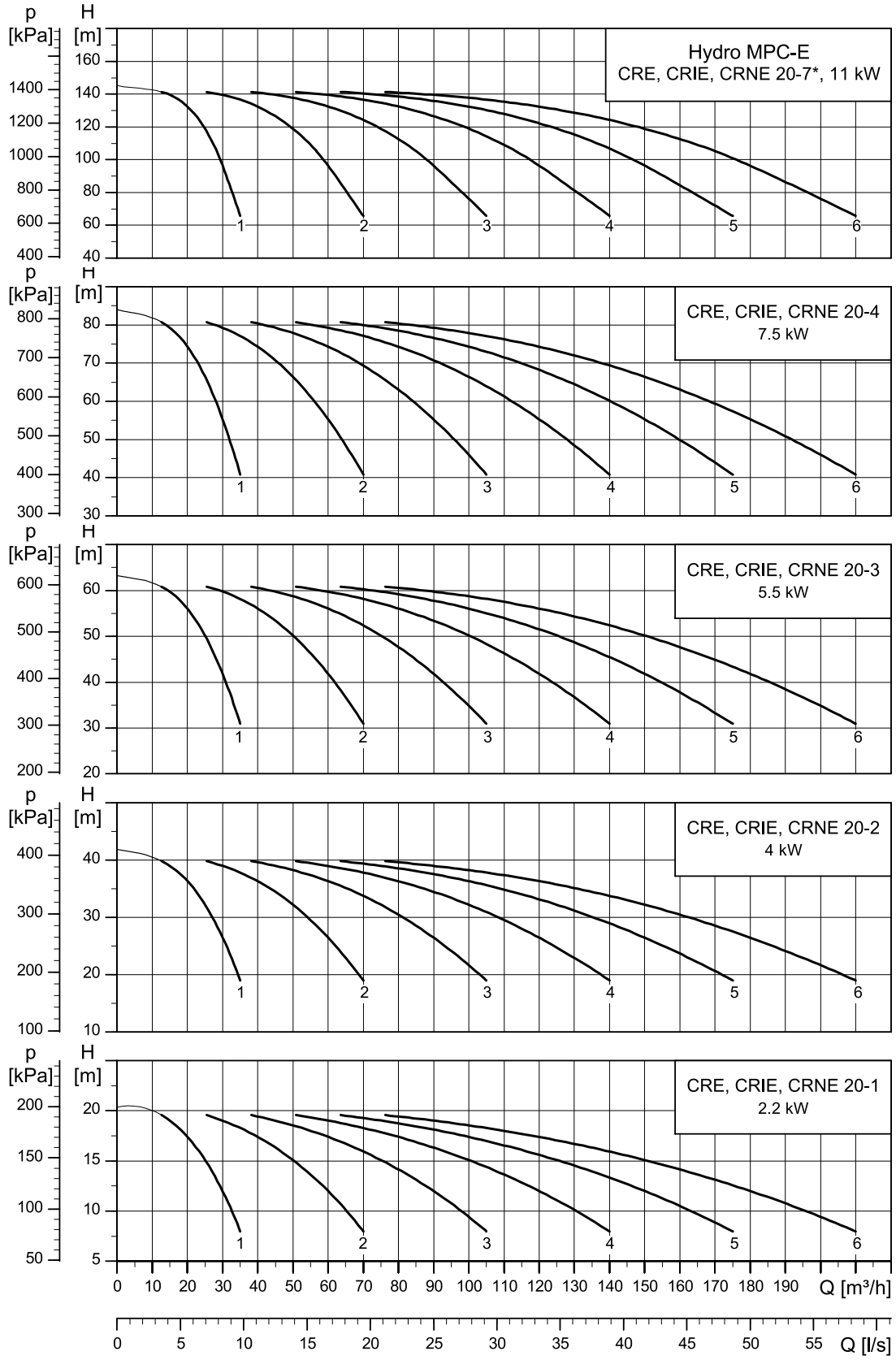

* For undersized motors, the maximum speed depends on the power usage.
Losses in fittings and valves are not included.

Dimensional sketch

Below is the dimensional sketch of the presented system in different designs. The system is shown as an example. The pumps and panel supplied may differ from the sketch.

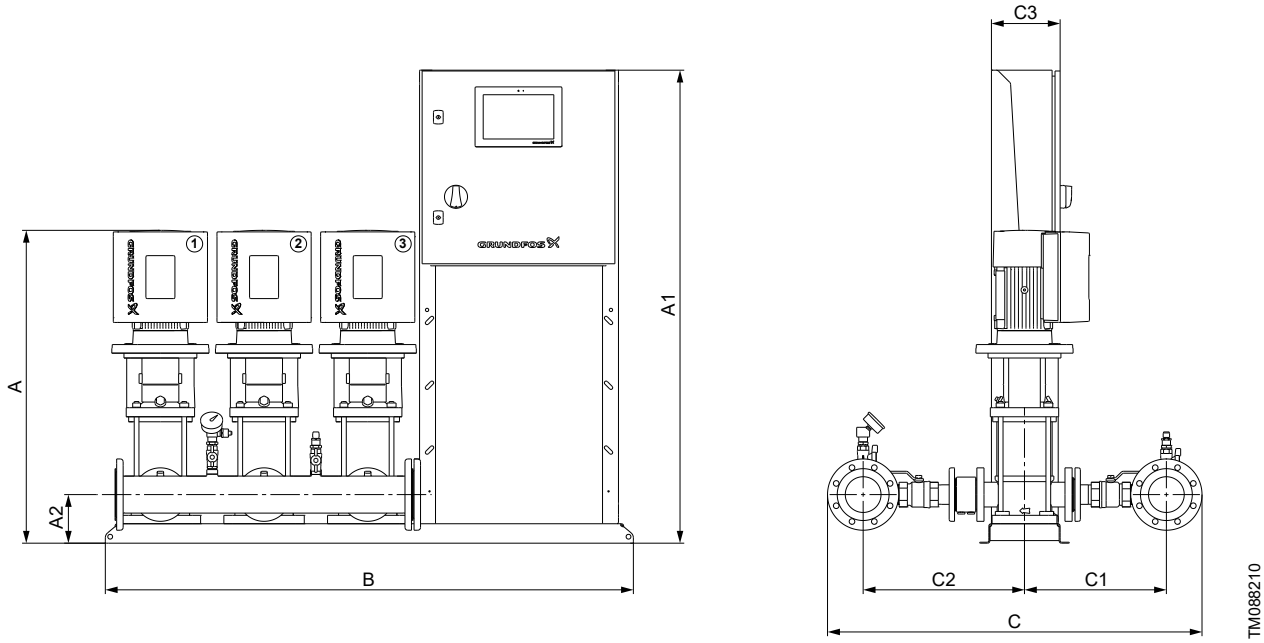

Design GA

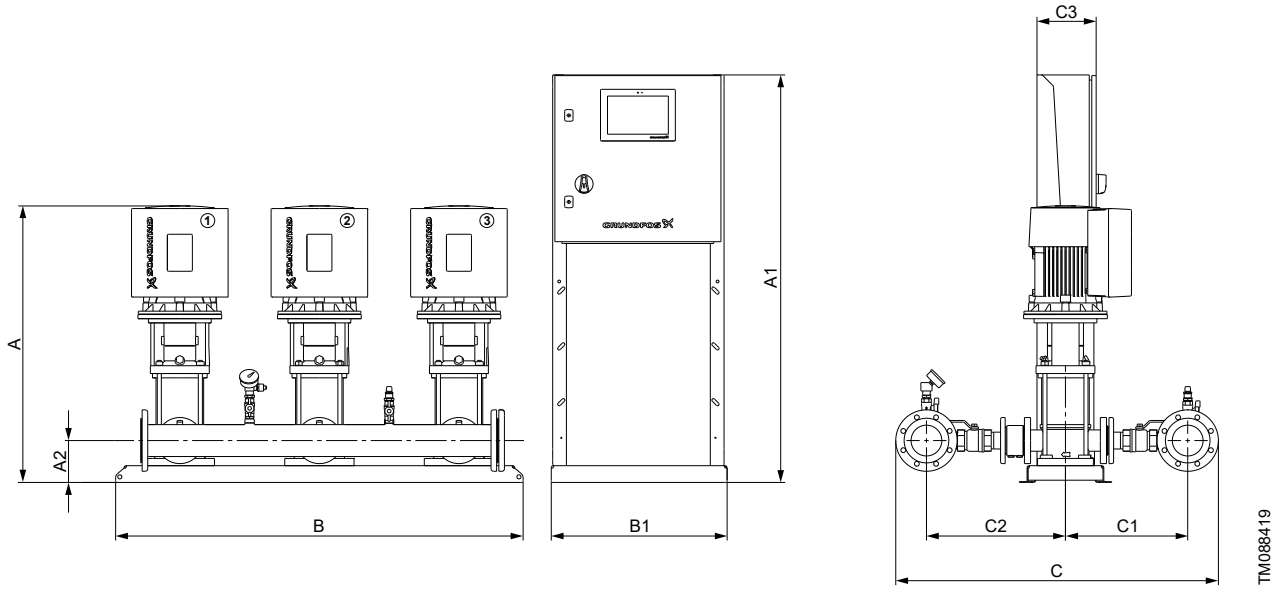

Design GD

Electrical data, dimensions and weights

Number of pumps	Pump type	Motor power [kW]	Motor type	Voltage code	Rated current [A]	Connections	A [mm]	A1 [mm]	A2 [mm]	B [mm]	B1 [mm]	C [mm]	C1 [mm]	C2 [mm]	C3 [mm]	Net weight [kg]	Design
2	CRE, CRIE, CRNE 20-1	2.2	●	V1	8.9	DN 80	749	1460	152	1110	-	1135	438	497	200	168	GA
	CRE, CRIE, CRNE 20-2	4	●	V1	15.5	DN 80	814	1460	152	1110	-	1135	438	497	200	189	GA
	CRE, CRIE, CRNE 20-3	5.5	●	V1	20.7	DN 80	922	1460	152	1110	-	1135	438	497	200	233	GA
	CRE, CRIE, CRNE 20-4	7.5	●	V1	28	DN 80	991	1460	152	1022	410	1135	438	497	200	271	GD
	CRE, CRIE, CRNE 20-7 [9]	11	●	V1	40	DN 80	1260	1460	192	1022	410	1135	438	497	200	331	GD
3	CRE, CRIE, CRNE 20-1	2.2	●	V1	12.9	DN 100	749	1460	152	1630	-	1155	438	497	200	244	GA
	CRE, CRIE, CRNE 20-2	4	●	V1	22.9	DN 100	814	1460	152	1630	-	1155	438	497	200	274	GA
	CRE, CRIE, CRNE 20-3	5.5	●	V1	30.7	DN 100	922	1460	152	1630	-	1155	438	497	200	340	GA
	CRE, CRIE, CRNE 20-4	7.5	●	V1	41.7	DN 100	991	1460	152	1522	410	1155	438	497	200	382	GD
	CRE, CRIE, CRNE 20-7*	11	●	V1	59.5	DN 100	1260	1460	192	1522	410	1155	438	497	200	473	GD
4	CRE, CRIE, CRNE 20-1	2.2	●	V1	16.9	DN 100	749	1460	152	1950	-	1155	438	497	200	305	GA
	CRE, CRIE, CRNE 20-2	4	●	V1	30.3	DN 100	814	1460	152	1950	-	1155	438	497	200	345	GA
	CRE, CRIE, CRNE 20-3	5.5	●	V1	40.6	DN 100	922	1460	152	1950	-	1155	438	497	200	433	GA
	CRE, CRIE, CRNE 20-4	7.5	●	V1	55.3	DN 100	991	1460	152	2022	410	1155	438	497	200	489	GD
	CRE, CRIE, CRNE 20-7*	11	●	V1	79.1	DN 100	1260	1460	192	2022	410	1155	438	497	200	616	GD
5	CRE, CRIE, CRNE 20-1	2.2	●	V1	21	DN 150	749	1460	152	1704	630	1220	438	497	300	399	GD
	CRE, CRIE, CRNE 20-2	4	●	V1	37.7	DN 150	814	1460	152	1704	630	1220	438	497	300	451	GD
	CRE, CRIE, CRNE 20-3	5.5	●	V1	50.6	DN 150	922	1460	152	1704	630	1220	438	497	300	562	GD
	CRE, CRIE, CRNE 20-4	7.5	●	V1	68.9	DN 150	991	1460	152	2524	630	1220	438	497	300	638	GD
	CRE, CRIE, CRNE 20-7*	11	●	V1	98.7	DN 150	1260	1460	192	2524	630	1220	438	497	300	794	GD
6	CRE, CRIE, CRNE 20-1	2.2	●	V1	25	DN 150	749	1460	152	2024	630	1220	438	497	300	462	GD
	CRE, CRIE, CRNE 20-2	4	●	V1	45	DN 150	814	1460	152	2024	630	1220	438	497	300	524	GD
	CRE, CRIE, CRNE 20-3	5.5	●	V1	60.5	DN 150	922	1460	152	2024	630	1220	438	497	300	658	GD
	CRE, CRIE, CRNE 20-4	7.5	●	V1	82.5	DN 150	991	1460	152	3024	830	1220	438	497	300	754	GD
	CRE, CRIE, CRNE 20-7*	11	●	V1	118.3	DN 150	1260	1460	192	3024	830	1220	438	497	300	934	GD

[9] Pump with undersized motor

Legend

● Three-phase motors

- Not applicable

Additional notes

- Motor power is the power per pump.
- Depending on the design, the control circuit may require additional current beyond the rated value.
- Voltage code V1 refers to the following: 3 × 400 V ± 5 %, 50 Hz, N, PE.
- Design GA indicates that the pumps and the control panel are mounted on the same base frame.
- Design GD indicates that the pumps and the control panel are mounted on their own base frames. The base frames are separated. The control panel can be placed up to 3 meters from the pumps.
- Dimensions may vary by ±20 mm.

Hydro MPC-E with CRE, CRNE 32

Curve charts

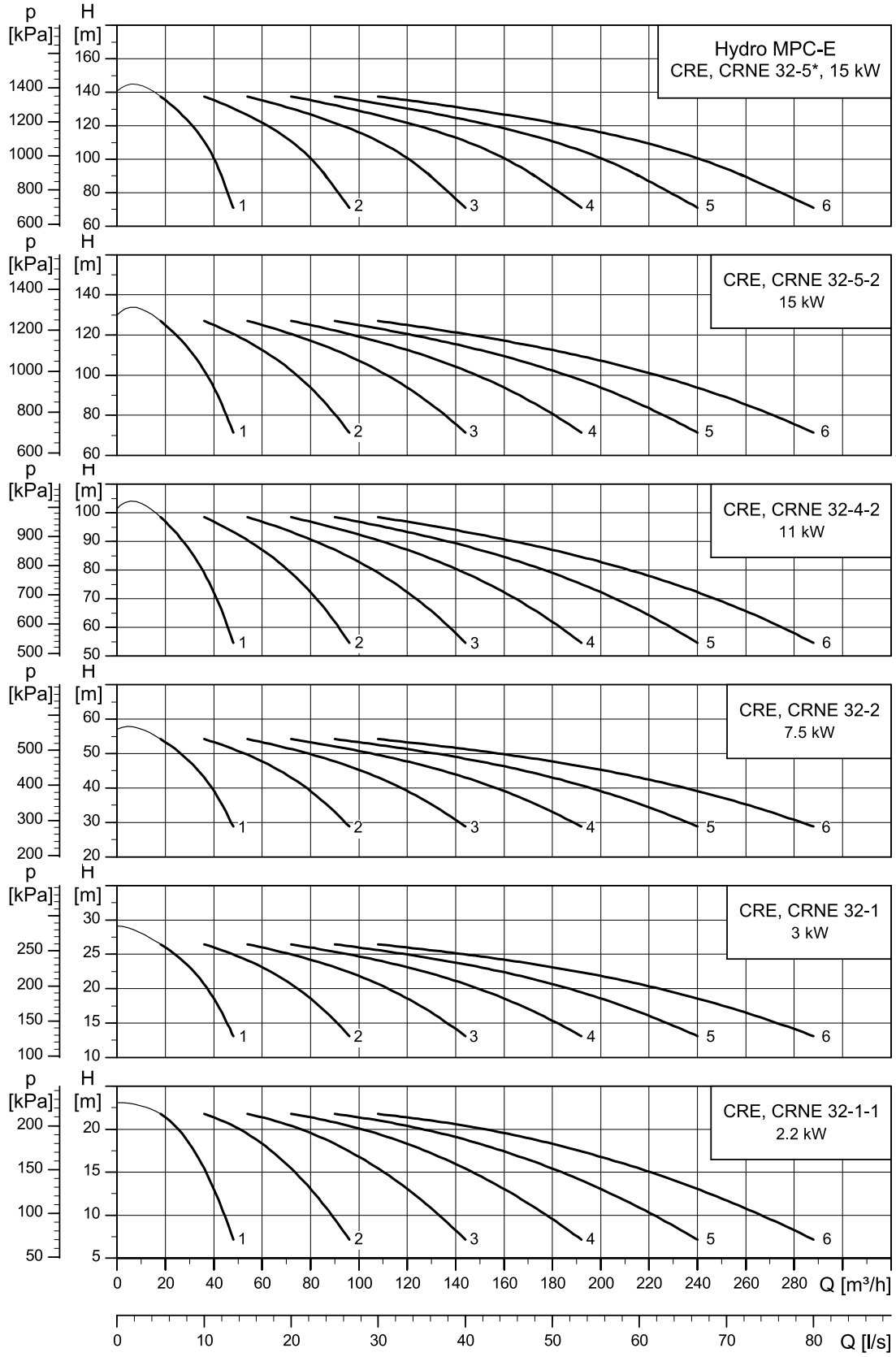

* For undersized motors, the maximum speed depends on the power usage.
Losses in fittings and valves are not included.

Dimensional sketch

Below is the dimensional sketch of the presented system in different designs. The system is shown as an example. The pumps and panel supplied may differ from the sketch.

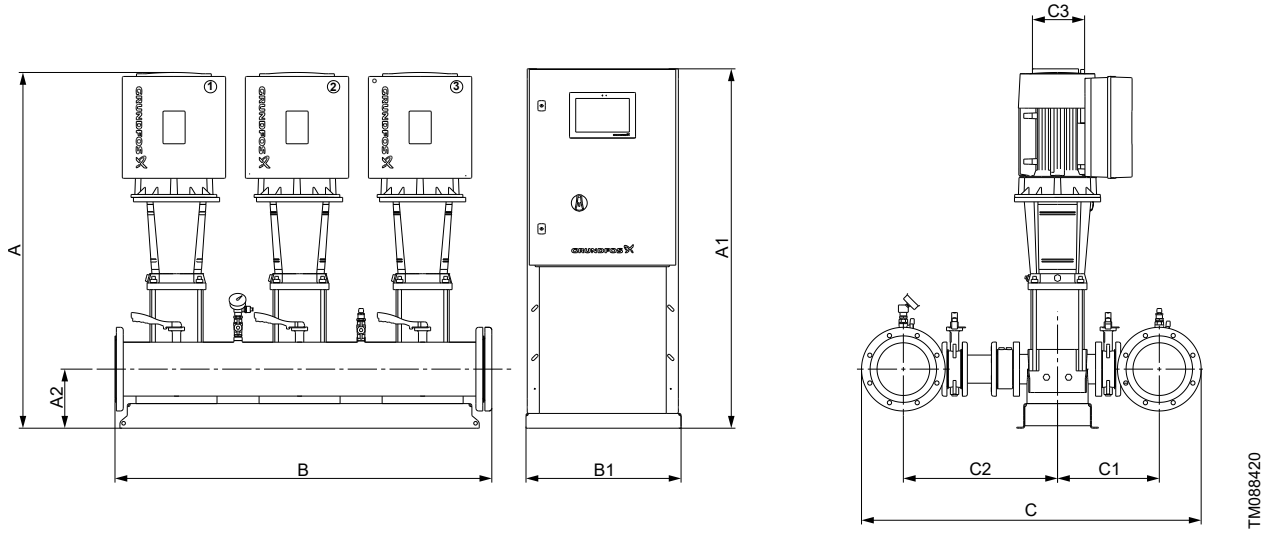

Design GD

Electrical data, dimensions and weights

Number of pumps	Pump type	Motor power [kW]	Motor type	Voltage code	Rated current [A]	Connections	A [mm]	A1 [mm]	A2 [mm]	B [mm]	B1 [mm]	C [mm]	C1 [mm]	C2 [mm]	C3 [mm]	Net weight [kg]	Design
2	CRE, CRNE 32-1-1	2.2	•	V1	8.9	DN 100	841	1460	167	1022	410	1180	379	579	200	234	GD
	CRE, CRNE 32-1	3	•	V1	12.1	DN 100	901	1460	167	1022	410	1180	379	579	200	246	GD
	CRE, CRNE 32-2	7.5	•	V1	28	DN 100	1026	1460	167	1022	410	1180	379	579	200	307	GD
	CRE, CRNE 32-4-2	11	•	V1	40	DN 100	1333	1460	207	1022	410	1180	379	579	200	378	GD
	CRE, CRNE 32-5-2	15	•	V1	52.3	DN 100	1479	1460	207	1022	410	1180	379	579	200	436	GD
	CRE, CRNE 32-5 [10)]	15	•	V1	52.3	DN 100	1479	1460	207	1022	410	1180	379	579	200	436	GD
3	CRE, CRNE 32-1-1	2.2	•	V1	12.9	DN 150	841	1460	167	1524	410	1245	379	579	200	360	GD
	CRE, CRNE 32-1	3	•	V1	17.7	DN 150	901	1460	167	1524	410	1245	379	579	200	366	GD
	CRE, CRNE 32-2	7.5	•	V1	41.7	DN 150	1026	1460	167	1524	410	1245	379	579	200	451	GD
	CRE, CRNE 32-4-2	11	•	V1	59.5	DN 150	1333	1460	207	1524	410	1245	379	579	200	560	GD
	CRE, CRNE 32-5-2	15	•	V1	78.1	DN 150	1479	1460	207	1524	410	1245	379	579	200	653	GD
	CRE, CRNE 32-5 [10)]	15	•	V1	78.1	DN 150	1479	1460	207	1524	410	1245	379	579	200	653	GD
4	CRE, CRNE 32-1-1	2.2	•	V1	16.9	DN 150	841	1460	167	2024	410	1245	379	579	200	453	GD
	CRE, CRNE 32-1	3	•	V1	23.3	DN 150	901	1460	167	2024	410	1245	379	579	200	465	GD
	CRE, CRNE 32-2	7.5	•	V1	55.3	DN 150	1026	1460	167	2024	410	1245	379	579	200	576	GD
	CRE, CRNE 32-4-2	11	•	V1	79.1	DN 150	1333	1460	207	2024	410	1245	379	579	200	726	GD
	CRE, CRNE 32-5-2	15	•	V1	103.8	DN 150	1479	1460	207	2024	630	1245	379	579	300	844	GD
	CRE, CRNE 32-5 [10)]	15	•	V1	103.8	DN 150	1479	1460	207	2024	630	1245	379	579	300	844	GD

Number of pumps	Pump type	Motor power [kW]	Motor type	Voltage code	Rated current [A]	Connections	A [mm]	A1 [mm]	A2 [mm]	B [mm]	B1 [mm]	C [mm]	C1 [mm]	C2 [mm]	C3 [mm]	Net weight [kg]	Design
5	CRE, CRNE 32-1-1	2.2	●	V1	21	DN 150	841	1460	167	2524	630	1245	379	579	300	559	GD
	CRE, CRNE 32-1	3	●	V1	29	DN 150	901	1460	167	2524	630	1245	379	579	300	590	GD
	CRE, CRNE 32-2	7.5	●	V1	68.9	DN 150	1026	1460	167	2524	630	1245	379	579	300	714	GD
	CRE, CRNE 32-4-2	11	●	V1	98.7	DN 150	1333	1460	207	2524	630	1245	379	579	300	898	GD
	CRE, CRNE 32-5-2	15	●	V1	129.6	DN 150	1479	1460	207	2524	630	1245	379	579	300	1060	GD
	CRE, CRNE 32-5 [10)]	15	●	V1	129.6	DN 150	1479	1460	207	2524	630	1245	379	579	300	1060	GD
6	CRE, CRNE 32-1-1	2.2	●	V1	25	DN 150	841	1460	167	3024	630	1245	379	579	300	653	GD
	CRE, CRNE 32-1	3	●	V1	34.6	DN 150	901	1460	167	3024	630	1245	379	579	300	690	GD
	CRE, CRNE 32-2	7.5	●	V1	82.5	DN 150	1026	1460	167	3024	630	1245	379	579	300	845	GD
	CRE, CRNE 32-4-2	11	●	V1	118.3	DN 150	1333	1460	207	3024	630	1245	379	579	300	1059	GD
	CRE, CRNE 32-5-2	15	●	V1	155.4	DN 150	1479	1460	207	3024	630	1245	379	579	300	1250	GD
	CRE, CRNE 32-5 [10)]	15	●	V1	155.4	DN 150	1479	1460	207	3024	630	1245	379	579	300	1250	GD

[10)] Pump with undersized motor

Legend

● Three-phase motors

Additional notes

- Motor power is the power per pump.
- Depending on the design, the control circuit may require additional current beyond the rated value.
- Voltage code V1 refers to the following: 3 × 400 V ± 5 %, 50 Hz, N, PE.
- Design GD indicates that the pumps and the control panel are mounted on their own base frames. The base frames are separated. The control panel can be placed up to 3 meters from the pumps.
- Dimensions may vary by ±20 mm.

Hydro MPC-E with CRE, CRNE 45

Curve charts

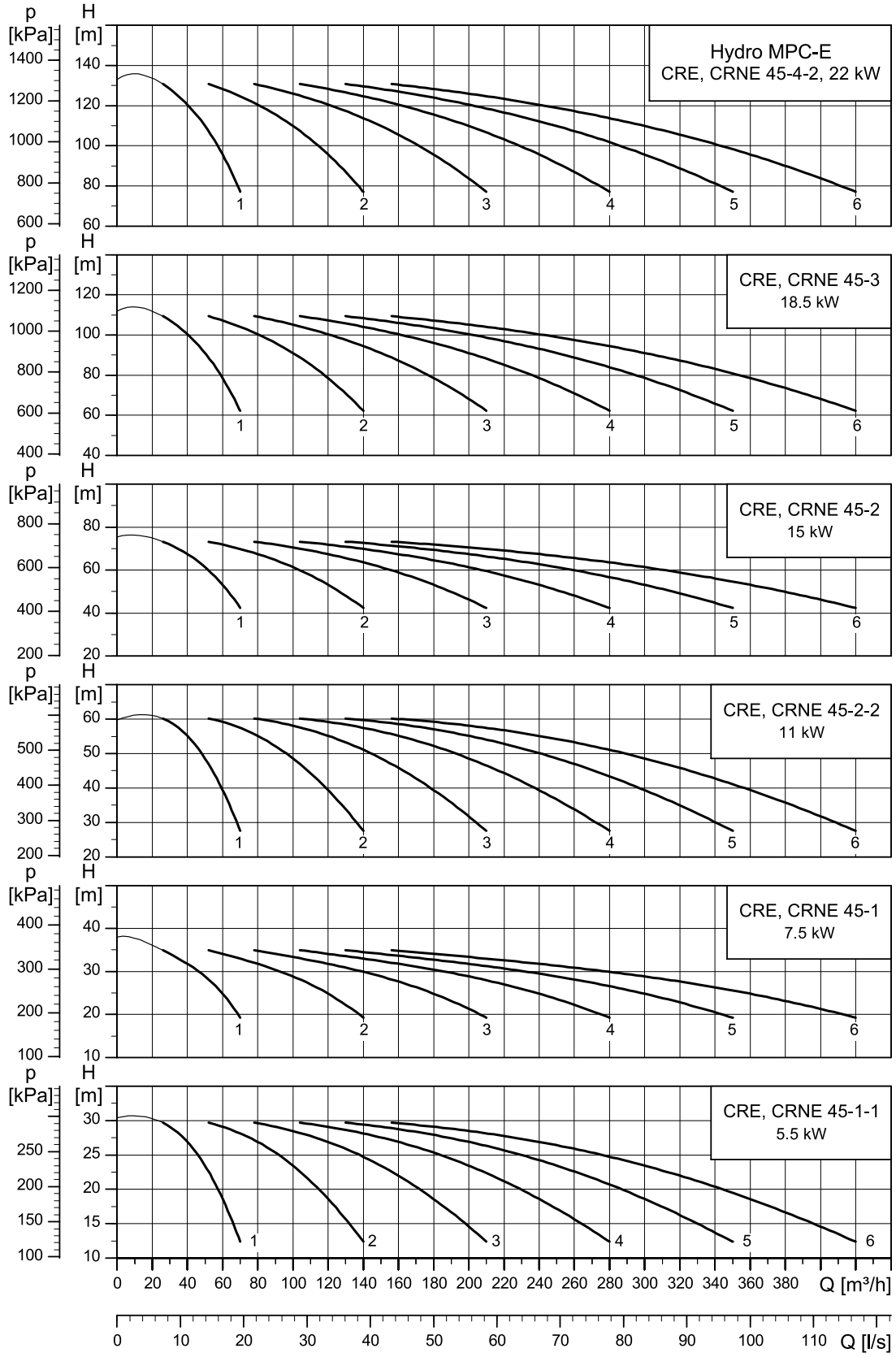

Losses in fittings and valves are not included.

Dimensional sketch

Below is the dimensional sketch of the presented system in different designs. The system is shown as an example. The pumps and panel supplied may differ from the sketch.

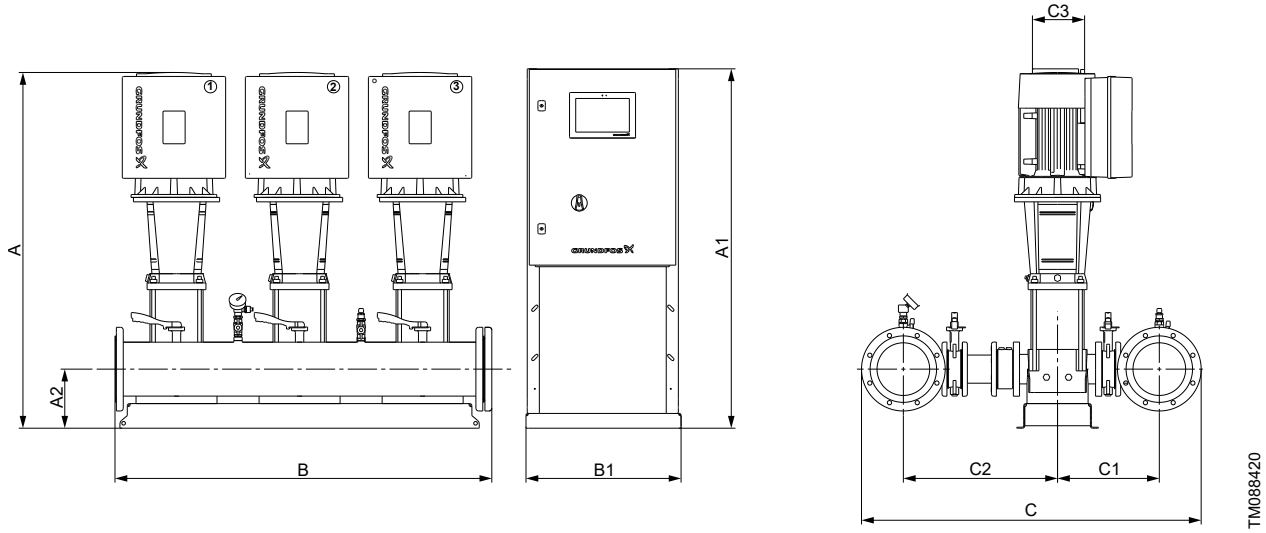

Design GD

Electrical data, dimensions and weights

Number of pumps	Pump type	Motor power [kW]	Motor type	Voltage code	Rated current [A]	Connections	A [mm]	A1 [mm]	A2 [mm]	B [mm]	B1 [mm]	C [mm]	C1 [mm]	C2 [mm]	C3 [mm]	Net weight [kg]	Design
2	CRE, CRNE 45-1-1	5.5	●	V1	20.7	DN 150	986	1460	202	1024	410	1335	419	629	200	328	GD
	CRE, CRNE 45-1	7.5	●	V1	28	DN 150	1010	1460	202	1024	410	1335	419	629	200	354	GD
	CRE, CRNE 45-2-2	11	●	V1	40	DN 150	1257	1460	242	1024	410	1335	419	629	200	420	GD
3	CRE, CRNE 45-1-1	5.5	●	V1	30.7	DN 200	986	1460	202	1526	410	1390	419	629	200	491	GD
	CRE, CRNE 45-1	7.5	●	V1	41.7	DN 200	1010	1460	202	1526	410	1390	419	629	200	510	GD
	CRE, CRNE 45-2-2	11	●	V1	59.5	DN 200	1257	1460	242	1526	410	1390	419	629	200	611	GD
	CRE, CRNE 45-2	15	●	V1	78.1	DN 200	1333	1460	242	1526	410	1390	419	629	200	695	GD
	CRE, CRNE 45-3	18.5	●	V1	96.7	DN 200	1413	1460	242	1526	410	1390	419	629	200	723	GD
	CRE, CRNE 45-4-2	22	●	V1	113.8	DN 200	1519	1460	242	1526	630	1390	419	629	300	782	GD
4	CRE, CRNE 45-1-1	5.5	●	V1	40.6	DN 200	986	1460	202	2026	410	1390	419	629	200	623	GD
	CRE, CRNE 45-1	7.5	●	V1	55.3	DN 200	1010	1460	202	2026	410	1390	419	629	200	651	GD
	CRE, CRNE 45-2-2	11	●	V1	79.1	DN 200	1257	1460	242	2026	410	1390	419	629	200	790	GD
	CRE, CRNE 45-2	15	●	V1	103.8	DN 200	1333	1460	242	2026	630	1390	419	629	300	895	GD
	CRE, CRNE 45-3	18.5	●	V1	128.6	DN 200	1413	1460	242	2026	630	1390	419	629	300	948	GD
	CRE, CRNE 45-4-2	22	●	V1	151.4	DN 200	1519	1460	242	2026	630	1390	419	629	300	1027	GD
5	CRE, CRNE 45-1-1	5.5	●	V1	50.6	DN 200	986	1460	202	2526	630	1390	419	629	300	773	GD
	CRE, CRNE 45-1	7.5	●	V1	68.9	DN 200	1010	1460	202	2526	630	1390	419	629	300	807	GD
	CRE, CRNE 45-2-2	11	●	V1	98.7	DN 200	1257	1460	242	2526	630	1390	419	629	300	978	GD
	CRE, CRNE 45-2	15	●	V1	129.6	DN 200	1333	1460	242	2526	630	1390	419	629	300	1125	GD
	CRE, CRNE 45-3	18.5	●	V1	160.6	DN 200	1413	1460	242	2526	630	1390	419	629	300	1171	GD
	CRE, CRNE 45-4-2	22	●	V1	189.1	DN 200	1519	1460	242	2526	630	1390	419	629	300	1274	GD
6	CRE, CRNE 45-1-1	5.5	●	V1	60.5	DN 200	986	1460	202	3026	630	1390	419	629	300	906	GD
	CRE, CRNE 45-1	7.5	●	V1	82.5	DN 200	1010	1460	202	3026	630	1390	419	629	300	954	GD
	CRE, CRNE 45-2-2	11	●	V1	118.3	DN 200	1257	1460	242	3026	630	1390	419	629	300	1153	GD
	CRE, CRNE 45-2	15	●	V1	155.4	DN 200	1333	1460	242	3026	630	1390	419	629	300	1324	GD
	CRE, CRNE 45-3	18.5	●	V1	192.6	DN 200	1413	1460	242	3026	630	1390	419	629	300	1384	GD
	CRE, CRNE 45-4-2	22	●	V1	226.8	DN 200	1519	1700	242	3026	830	1390	419	629	300	1597	GD

Legend

● Three-phase motors

Additional notes

- Motor power is the power per pump.
- Depending on the design, the control circuit may require additional current beyond the rated value.
- Voltage code V1 refers to the following: 3 × 400 V ± 5 %, 50 Hz, N, PE.
- Design GD indicates that the pumps and the control panel are mounted on their own base frames. The base frames are separated. The control panel can be placed up to 3 meters from the pumps.
- Dimensions may vary by ±20 mm.

Hydro MPC-E with CRE, CRNE 64

Curve charts

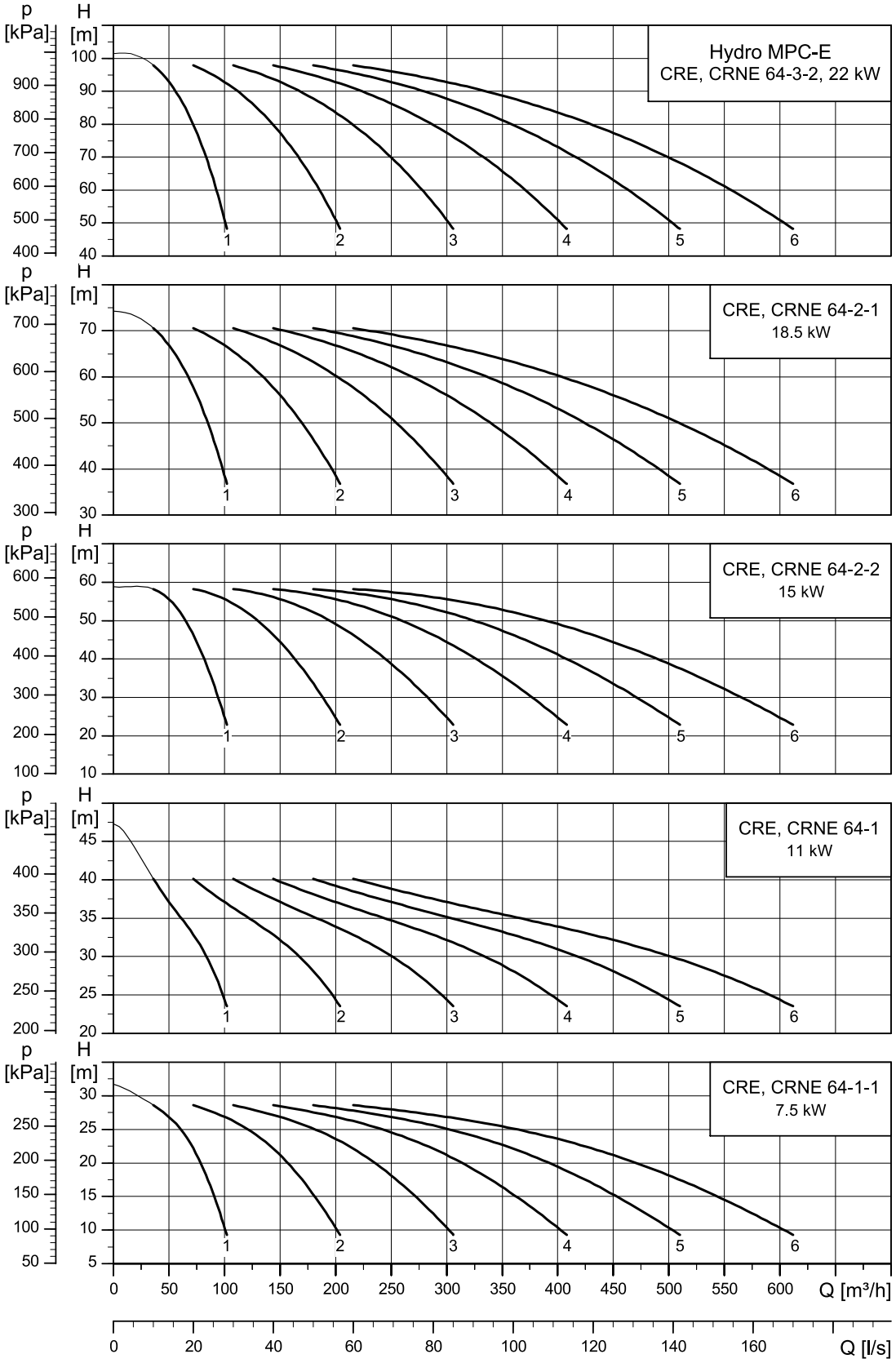

Losses in fittings and valves are not included.

Dimensional sketch

Below is the dimensional sketch of the presented system in different designs. The system is shown as an example. The pumps and panel supplied may differ from the sketch.

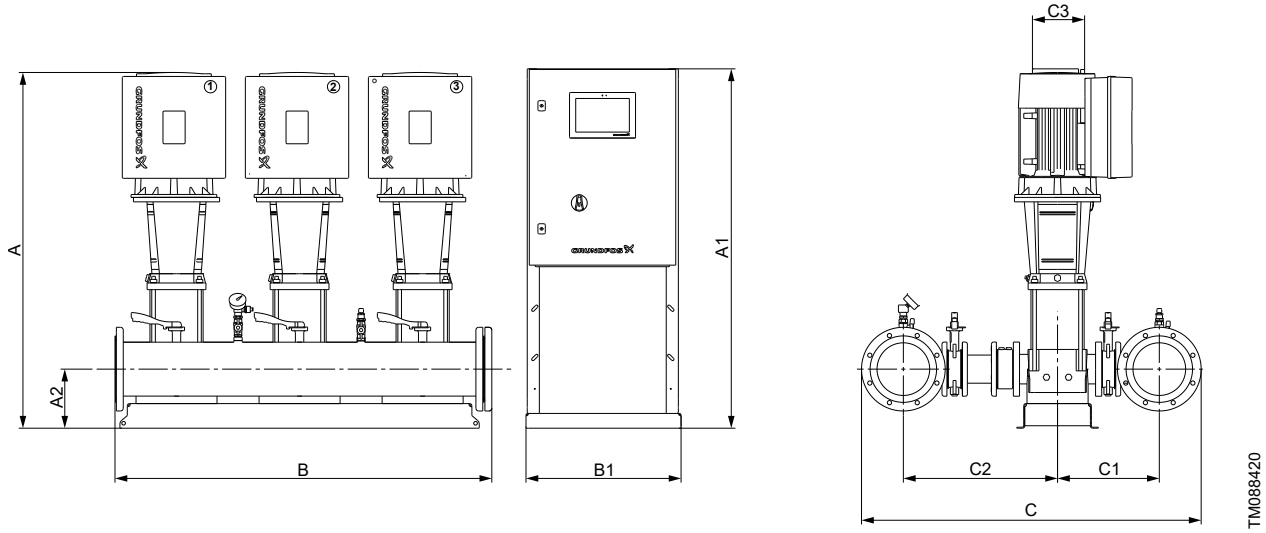

Design GD

Electrical data, dimensions and weights

Number of pumps	Pump type	Motor power [kW]	Motor type	Voltage code	Rated current [A]	Connections	A [mm]	A1 [mm]	A2 [mm]	B [mm]	B1 [mm]	C [mm]	C1 [mm]	C2 [mm]	C3 [mm]	Net weight [kg]	Design
3	CRE, CRNE 64-1-1	7.5	●	V1	41.7	DN 200	1012	1460	202	1526	410	1390	421	631	200	519	GD
	CRE, CRNE 64-1	11	●	V1	59.5	DN 200	1179	1460	242	1526	410	1390	421	631	200	608	GD
	CRE, CRNE 64-2-2	15	●	V1	78.1	DN 200	1338	1460	242	1526	410	1390	421	631	200	705	GD
	CRE, CRNE 64-2-1	18.5	●	V1	96.7	DN 200	1338	1460	242	1526	410	1390	421	631	200	722	GD
	CRE, CRNE 64-3-2	22	●	V1	113.8	DN 200	1446	1460	242	1526	630	1390	421	631	300	783	GD
4	CRE, CRNE 64-1-1	7.5	●	V1	55.3	DN 200	1012	1460	202	2026	410	1390	421	631	200	662	GD
	CRE, CRNE 64-1	11	●	V1	79.1	DN 200	1179	1460	242	2026	410	1390	421	631	200	787	GD
	CRE, CRNE 64-2-2	15	●	V1	103.8	DN 200	1338	1460	242	2026	630	1390	421	631	300	910	GD
	CRE, CRNE 64-2-1	18.5	●	V1	128.6	DN 200	1338	1460	242	2026	630	1390	421	631	300	947	GD
	CRE, CRNE 64-3-2	22	●	V1	151.4	DN 200	1446	1460	242	2026	630	1390	421	631	300	1028	GD
5	CRE, CRNE 64-1-1	7.5	●	V1	68.9	DN 200	1012	1460	202	2526	630	1390	421	631	300	821	GD
	CRE, CRNE 64-1	11	●	V1	98.7	DN 200	1179	1460	242	2526	630	1390	421	631	300	974	GD
	CRE, CRNE 64-2-2	15	●	V1	129.6	DN 200	1338	1460	242	2526	630	1390	421	631	300	1143	GD
	CRE, CRNE 64-2-1	18.5	●	V1	160.6	DN 200	1338	1460	242	2526	630	1390	421	631	300	1169	GD
	CRE, CRNE 64-3-2	22	●	V1	189.1	DN 200	1446	1460	242	2526	630	1390	421	631	300	1276	GD
6	CRE, CRNE 64-1-1	7.5	●	V1	82.5	DN 200	1012	1460	202	3026	630	1390	421	631	300	971	GD
	CRE, CRNE 64-1	11	●	V1	118.3	DN 200	1179	1460	242	3026	630	1390	421	631	300	1147	GD
	CRE, CRNE 64-2-2	15	●	V1	155.4	DN 200	1338	1460	242	3026	630	1390	421	631	300	1346	GD
	CRE, CRNE 64-2-1	18.5	●	V1	192.6	DN 200	1338	1460	242	3026	630	1390	421	631	300	1382	GD
	CRE, CRNE 64-3-2	22	●	V1	226.8	DN 200	1446	1700	242	3026	830	1390	421	631	300	1599	GD

Legend

● Three-phase motors

Additional notes

- Motor power is the power per pump.
- Depending on the design, the control circuit may require additional current beyond the rated value.
- Voltage code V1 refers to the following: 3 × 400 V ± 5 %, 50 Hz, N, PE.
- Design GD indicates that the pumps and the control panel are mounted on their own base frames. The base frames are separated. The control panel can be placed up to 3 meters from the pumps.
- Dimensions may vary by ±20 mm.

Hydro MPC-EC with CR, CRN 64

Curve charts

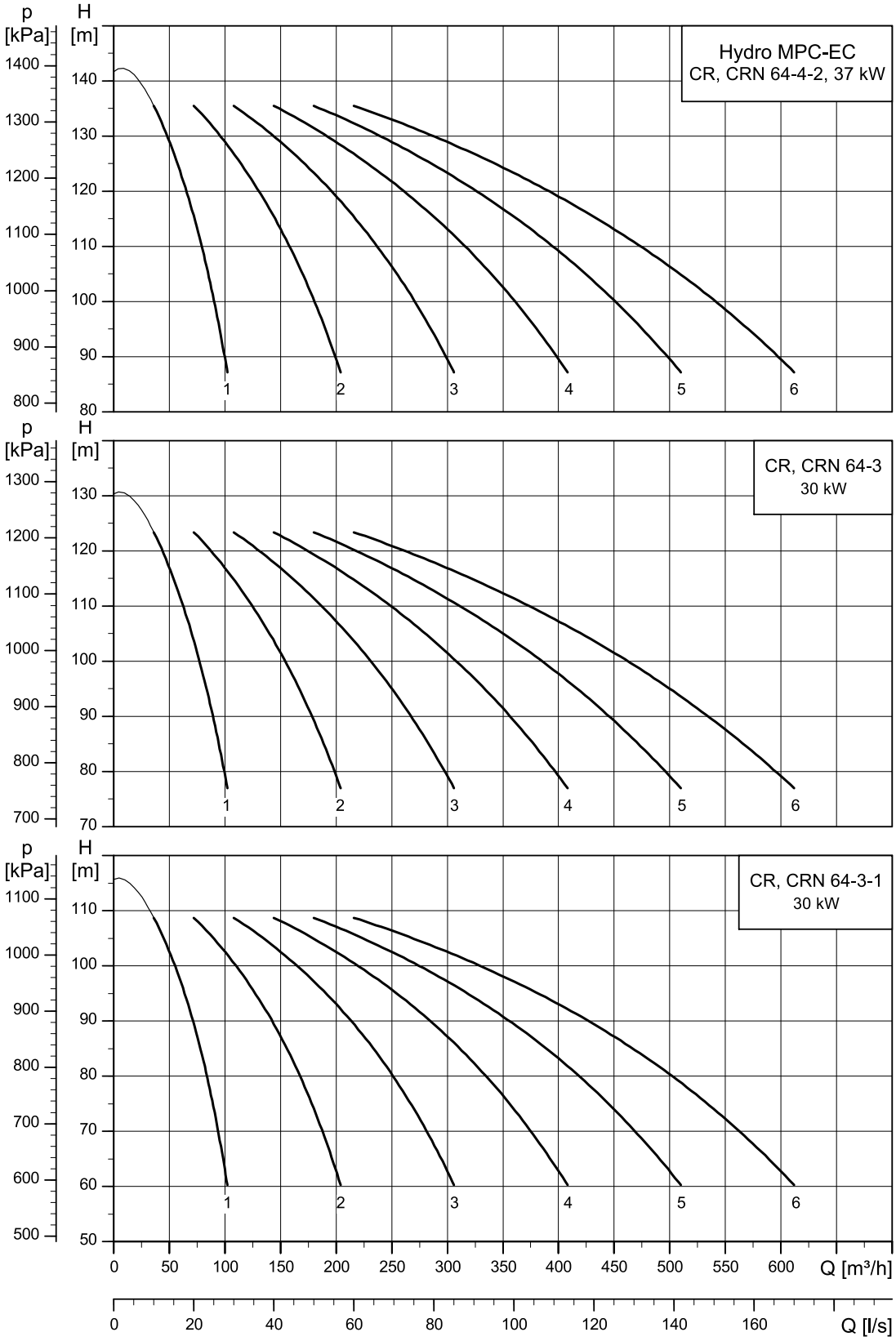

Losses in fittings and valves are not included.

Dimensional sketch

Below is the dimensional sketch of the presented system in different designs. The system is shown as an example. The pumps and panel supplied may differ from the sketch.

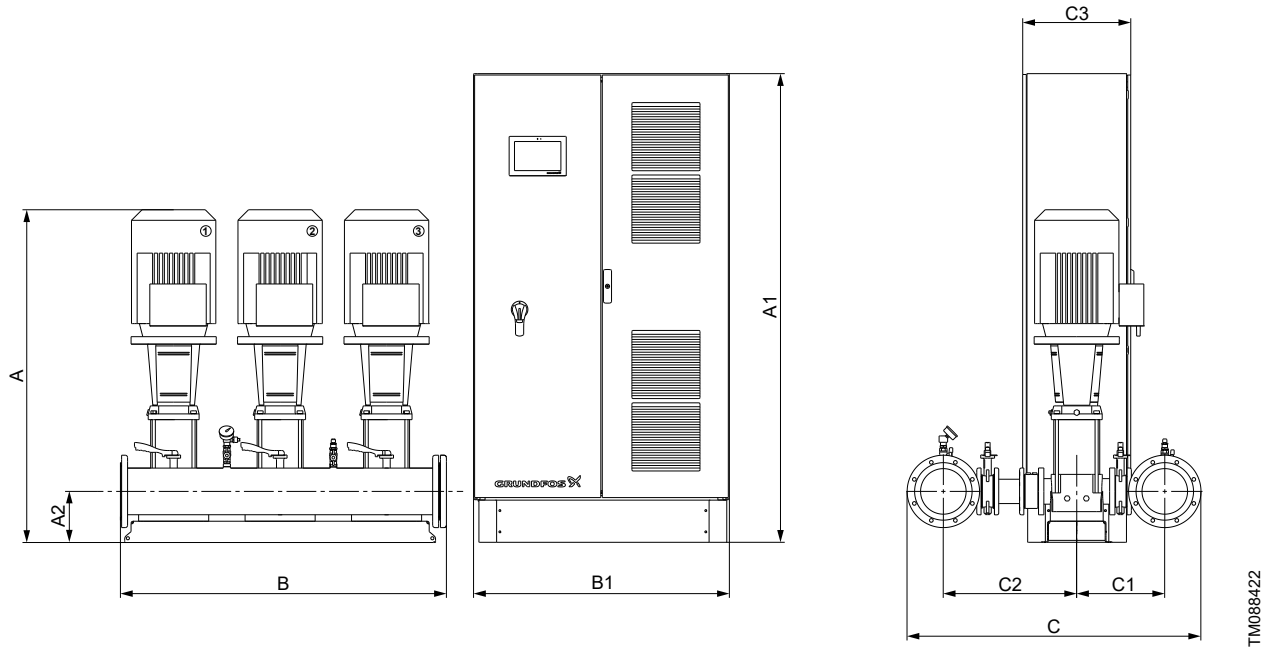

Design GC

Electrical data, dimensions and weights

Number of pumps	Pump type	Motor power [kW]	Motor type	Voltage code	Rated current [A]	Connections	A [mm]	A1 [mm]	A2 [mm]	B [mm]	B1 [mm]	C [mm]	C1 [mm]	C2 [mm]	C3 [mm]	Net weight [kg]	Design
3	CR, CRN 64-3-1	30	●	V1	165.8	DN 200	1549	1900	242	1526	1200	1390	421	631	400	1477	GC
	CR, CRN 64-3	30	●	V1	165.8	DN 200	1549	1900	242	1526	1200	1390	421	631	400	1477	GC
	CR, CRN 64-4-2	37	●	V1	198.8	DN 200	1657	1900	242	1526	1200	1390	421	631	400	1737	GC
4	CR, CRN 64-3-1	30	●	V1	221.2	DN 200	1549	1900	242	2026	1600	1390	421	631	400	2032	GC
	CR, CRN 64-3	30	●	V1	221.2	DN 200	1549	1900	242	2026	1600	1390	421	631	400	2032	GC
	CR, CRN 64-4-2	37	●	V1	265.2	DN 200	1657	1900	242	2026	1600	1390	421	631	500	2162	GC
5	CR, CRN 64-3-1	30	●	V1	276.2	DN 200	1549	1900	242	2526	2000	1390	421	631	400	2444	GC
	CR, CRN 64-3	30	●	V1	276.2	DN 200	1549	1900	242	2526	2000	1390	421	631	400	2444	GC
	CR, CRN 64-4-2	37	●	V1	331.2	DN 200	1657	1900	242	2526	2400	1390	421	631	500	2605	GC
6	CR, CRN 64-3-1	30	●	V1	331.2	DN 200	1549	1900	242	3026	2800	1390	421	631	400	2830	GC
	CR, CRN 64-3	30	●	V1	331.2	DN 200	1549	1900	242	3026	2800	1390	421	631	400	2830	GC
	CR, CRN 64-4-2	37	●	V1	397.7	DN 200	1657	1900	242	3026	2800	1390	421	631	500	3050	GC

Legend

● Three-phase motors

Additional notes

- Motor power is the power per pump.
- Depending on the design, the control circuit may require additional current beyond the rated value.
- Voltage code V1 refers to the following: 3 × 400 V ± 5 %, 50 Hz, N, PE.
- Design GC indicates that the pumps and the control panel are mounted on their own base frames. The base frames are separated. The control panel is for floor mounting and can be placed up to 3 meters from the pumps.
- Dimensions may vary by ±20 mm.

Hydro MPC-E with CRE, CRNE 95

Curve charts

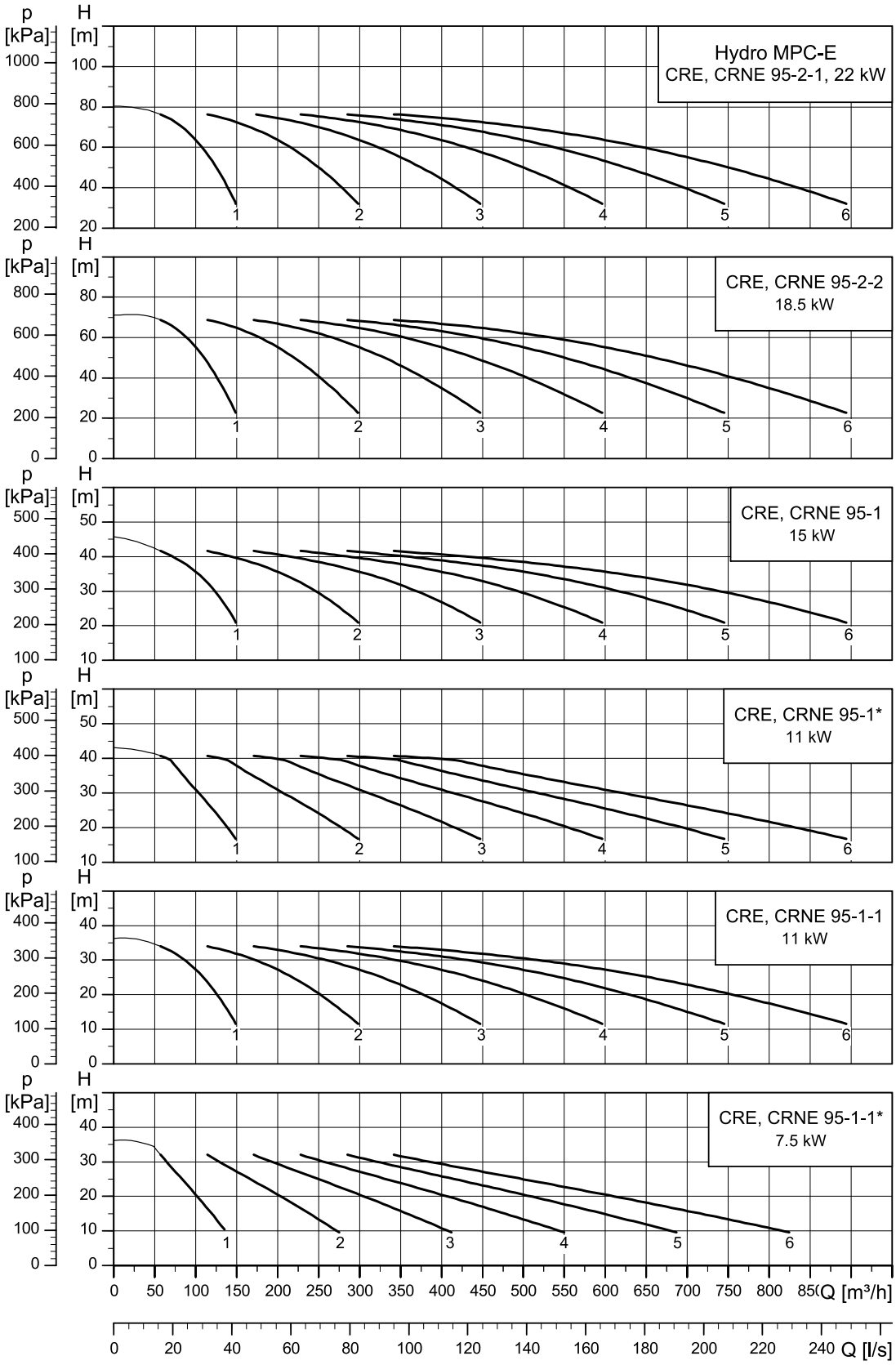

* For undersized motors, the maximum speed depends on the power usage.
Losses in fittings and valves are not included.

Dimensional sketch

Below is the dimensional sketch of the presented system in different designs. The system is shown as an example. The pumps and panel supplied may differ from the sketch.

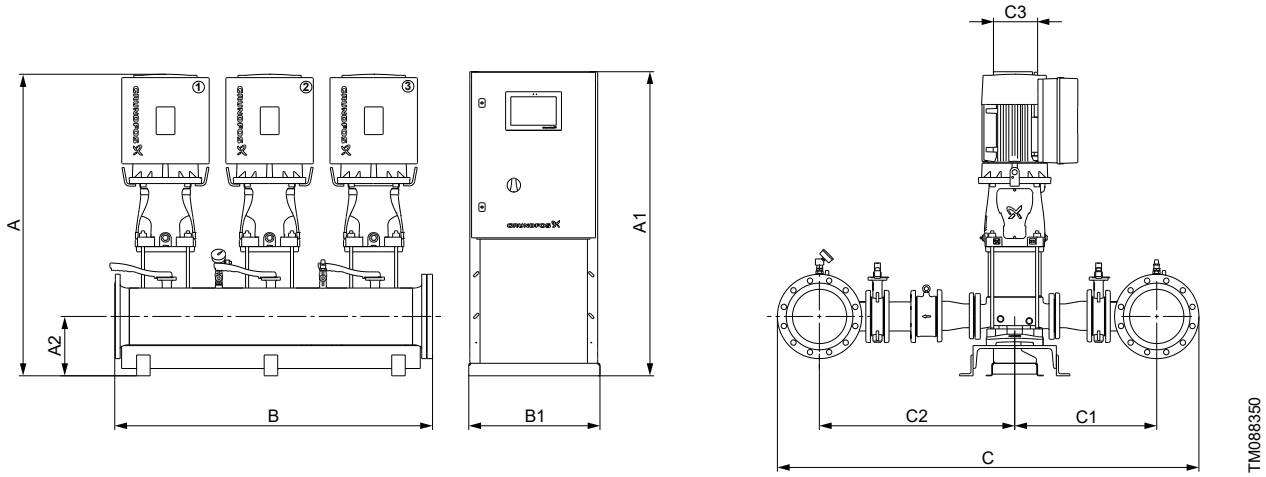

Design GD

Electrical data, dimensions and weights

Number of pumps	Pump type	Motor power [kW]	Motor type	Voltage code	Rated current [A]	Connections	A [mm]	A1 [mm]	A2 [mm]	B [mm]	B1 [mm]	C [mm]	C1 [mm]	C2 [mm]	C3 [mm]	Net weight [kg]	Design
2	CRE, CRNE 95-1-1 11)	7.5	●	V1	28	DN 200	1225	1460	287	1026	410	1970	690	940	200	559	GD
	CRE, CRNE 95-1-1	11	●	V1	40	DN 200	1244	1460	287	1026	410	1970	690	940	200	603	GD
	CRE, CRNE 95-1 11)	11	●	V1	40	DN 200	1244	1460	287	1026	410	1970	690	940	200	603	GD
	CRE, CRNE 95-1	15	●	V1	52.3	DN 200	1320	1460	287	1026	410	1970	690	940	200	654	GD
	CRE, CRNE 95-2-2	18.5	●	V1	64.7	DN 200	1424	1460	287	1026	410	1970	690	940	200	677	GD
	CRE, CRNE 95-2-1	22	●	V1	76.1	DN 200	1450	1460	287	1026	630	1970	690	940	300	716	GD
3	CRE, CRNE 95-1-1 11)	7.5	●	V1	41.7	DN 250	1225	1460	287	1528	410	2035	690	940	200	892	GD
	CRE, CRNE 95-1-1	11	●	V1	59.5	DN 250	1244	1460	287	1528	410	2035	690	940	200	959	GD
	CRE, CRNE 95-1 11)	11	●	V1	59.5	DN 250	1244	1460	287	1528	410	2035	690	940	200	959	GD
	CRE, CRNE 95-1	15	●	V1	78.1	DN 250	1320	1460	287	1528	410	2035	690	940	200	1042	GD
	CRE, CRNE 95-2-2	18.5	●	V1	96.7	DN 250	1424	1460	287	1528	410	2035	690	940	200	1077	GD
	CRE, CRNE 95-2-1	22	●	V1	113.8	DN 250	1450	1460	287	1528	630	2035	690	940	300	1124	GD
4	CRE, CRNE 95-1-1 11)	7.5	●	V1	55.3	DN 250	1225	1460	287	2028	410	2035	690	940	200	1133	GD
	CRE, CRNE 95-1-1	11	●	V1	79.1	DN 250	1244	1460	287	2028	410	2035	690	940	200	1229	GD
	CRE, CRNE 95-1 11)	11	●	V1	79.1	DN 250	1244	1460	287	2028	410	2035	690	940	200	1229	GD
	CRE, CRNE 95-1	15	●	V1	103.8	DN 250	1320	1460	287	2028	630	2035	690	940	300	1334	GD
	CRE, CRNE 95-2-2	18.5	●	V1	128.6	DN 250	1424	1460	287	2028	630	2035	690	940	300	1395	GD
	CRE, CRNE 95-2-1	22	●	V1	151.4	DN 250	1450	1460	287	2028	630	2035	690	940	300	1458	GD

Number of pumps	Pump type	Motor power [kW]	Motor type	Voltage code	Rated current [A]	Connections	A [mm]	A1 [mm]	A2 [mm]	B [mm]	B1 [mm]	C [mm]	C1 [mm]	C2 [mm]	C3 [mm]	Net weight [kg]	Design
5	CRE, CRNE 95-1-1 [11]	7.5	●	V1	68.9	DN 300	1225	1460	287	2530	630	2090	690	940	300	1504	GD
	CRE, CRNE 95-1-1	11	●	V1	98.7	DN 300	1244	1460	287	2530	630	2090	690	940	300	1620	GD
	CRE, CRNE 95-1 [11]	11	●	V1	98.7	DN 300	1244	1460	287	2530	630	2090	690	940	300	1620	GD
	CRE, CRNE 95-1	15	●	V1	129.6	DN 300	1320	1460	287	2530	630	2090	690	940	300	1766	GD
	CRE, CRNE 95-2-2	18.5	●	V1	160.6	DN 300	1424	1460	287	2530	630	2090	690	940	300	1822	GD
	CRE, CRNE 95-2-1	22	●	V1	189.1	DN 300	1450	1460	287	2530	630	2090	690	940	300	1906	GD
6	CRE, CRNE 95-1-1 [11]	7.5	●	V1	82.5	DN 350	1225	1460	287	3032	630	2150	690	940	300	1839	GD
	CRE, CRNE 95-1-1	11	●	V1	118.3	DN 350	1244	1460	287	3032	630	2150	690	940	300	1971	GD
	CRE, CRNE 95-1 [11]	11	●	V1	118.3	DN 350	1244	1460	287	3032	630	2150	690	940	300	1971	GD
	CRE, CRNE 95-1	15	●	V1	155.4	DN 350	1320	1460	287	3032	630	2150	690	940	300	2143	GD
	CRE, CRNE 95-2-2	18.5	●	V1	192.6	DN 350	1424	1460	287	3032	630	2150	690	940	300	2215	GD
	CRE, CRNE 95-2-1	22	●	V1	226.8	DN 350	1450	1700	287	3032	830	2150	690	940	300	2405	GD

[11] Pump with undersized motor

Legend

● Three-phase motors

Additional notes

- Motor power is the power per pump.
- Depending on the design, the control circuit may require additional current beyond the rated value.
- Voltage code V1 refers to the following: 3 × 400 V ± 5 %, 50 Hz, N, PE.
- Design GD indicates that the pumps and the control panel are mounted on their own base frames. The base frames are separated. The control panel can be placed up to 3 meters from the pumps.
- Dimensions may vary by ±20 mm.

Hydro MPC-EC with CR, CRN 95

Curve charts

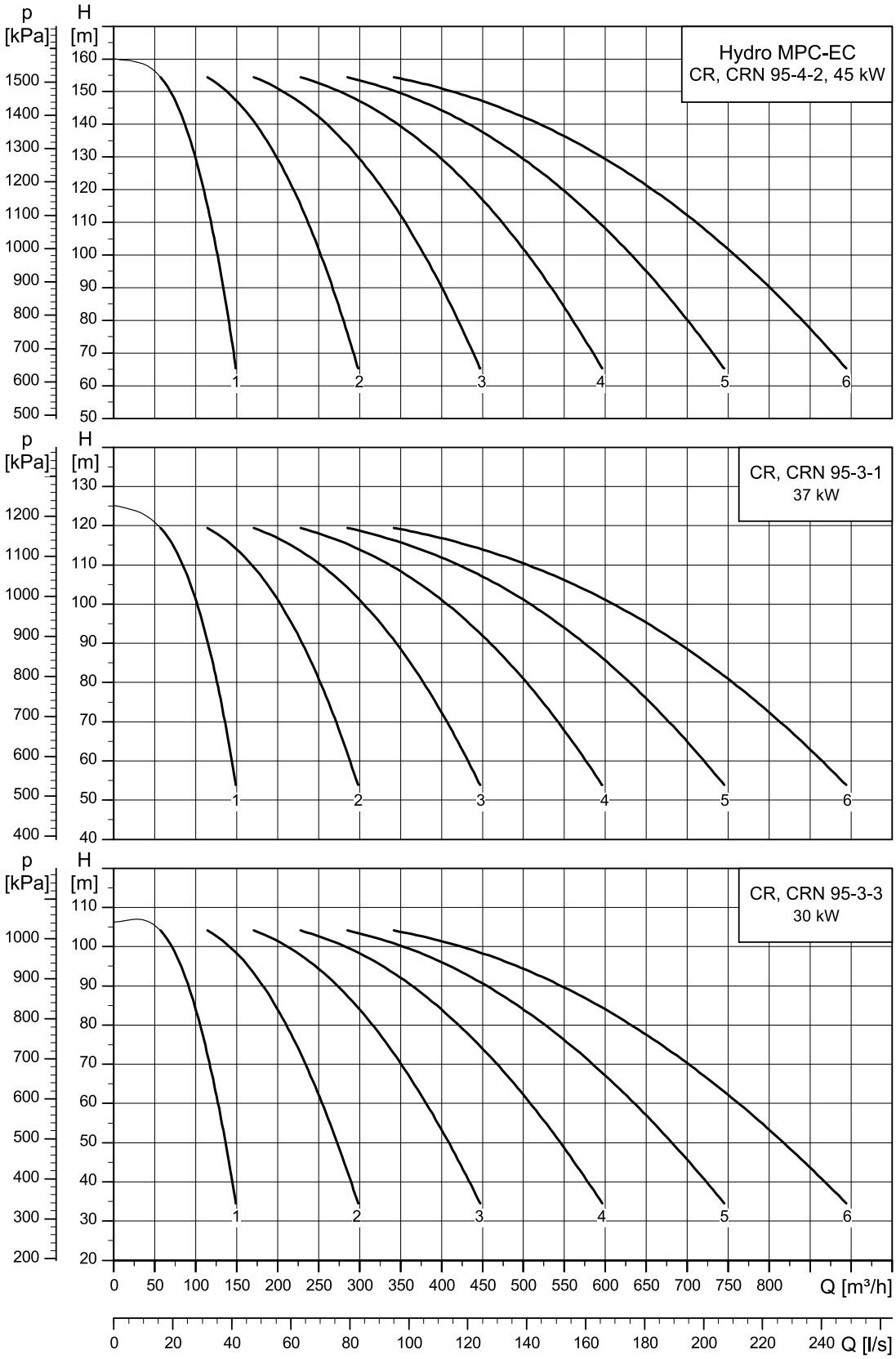

Losses in fittings and valves are not included.

Dimensional sketch

Below is the dimensional sketch of the presented system in different designs. The system is shown as an example. The pumps and panel supplied may differ from the sketch.

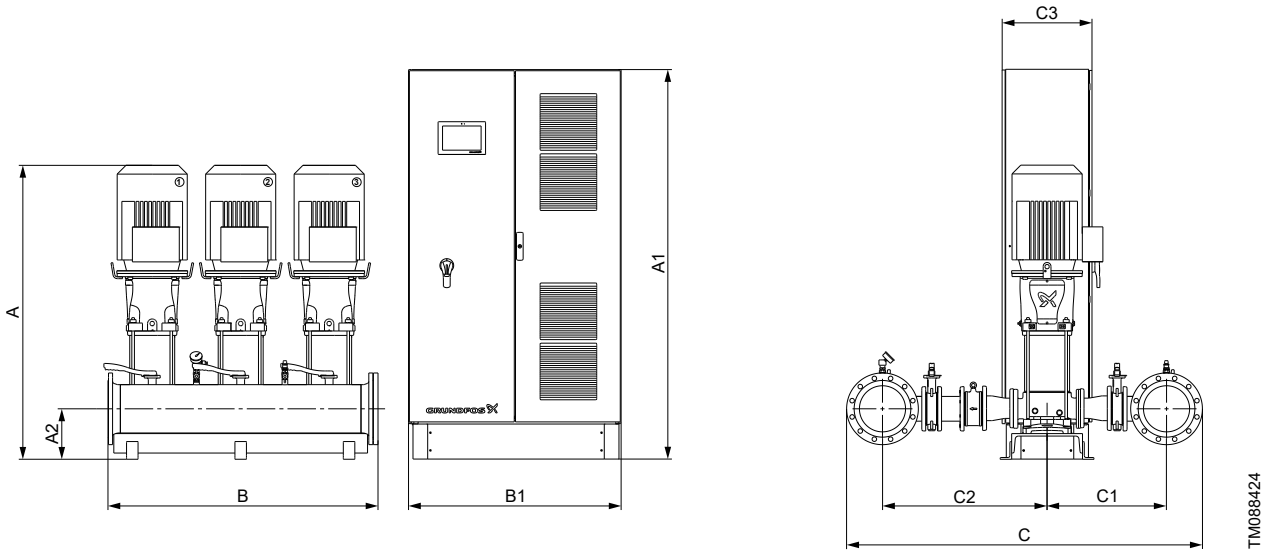

Design GC

Electrical data, dimensions and weights

Number of pumps	Pump type	Motor power [kW]	Motor type	Voltage code	Rated current [A]	Connections	A [mm]	A1 [mm]	A2 [mm]	B [mm]	B1 [mm]	C [mm]	C1 [mm]	C2 [mm]	C3 [mm]	Net weight [kg]	Design
2	CR, CRN 95-3-3	30	●	V1	110.8	DN 200	1663	1900	287	1026	1000	1970	690	940	400	1211	GC
	CR, CRN 95-3-1	37	●	V1	132.8	DN 200	1688	1900	287	1026	1000	1970	690	940	400	1317	GC
	CR, CRN 95-4-2	45	●	V1	164.8	DN 200	1884	1900	287	1026	1200	1970	690	940	500	1544	GC
3	CR, CRN 95-3-3	30	●	V1	165.8	DN 250	1663	1900	287	1528	1200	2035	690	940	400	1841	GC
	CR, CRN 95-3-1	37	●	V1	198.8	DN 250	1688	1900	287	1528	1200	2035	690	940	400	2082	GC
	CR, CRN 95-4-2	45	●	V1	247.2	DN 250	1884	1900	287	1528	1600	2035	690	940	500	2428	GC
4	CR, CRN 95-3-3	30	●	V1	221.2	DN 250	1663	1900	287	2028	1600	2035	690	940	500	2491	GC
	CR, CRN 95-3-1	37	●	V1	265.2	DN 250	1688	1900	287	2028	1600	2035	690	940	500	2596	GC
	CR, CRN 95-4-2	45	●	V1	329.2	DN 250	1884	1900	287	2028	1600	2035	690	940	500	3054	GC
5	CR, CRN 95-3-3	30	●	V1	276.2	DN 300	1663	1900	287	2530	2400	2090	690	940	500	3111	GC
	CR, CRN 95-3-1	37	●	V1	331.2	DN 300	1688	1900	287	2530	2400	2090	690	940	500	3241	GC
	CR, CRN 95-4-2	45	●	V1	412	DN 300	1884	1900	287	2530	3000	2090	690	940	500	4032	GC
6	CR, CRN 95-3-3	30	●	V1	331.2	DN 350	1663	1900	287	3032	2800	2150	690	940	500	3680	GC
	CR, CRN 95-3-1	37	●	V1	397.7	DN 350	1688	1900	287	3032	2800	2150	690	940	500	3862	GC
	CR, CRN 95-4-2	45	●	V1	494	DN 350	1884	1900	287	3032	3400	2150	690	940	500	4772	GC

Legend

● Three-phase motors

Additional notes

- Motor power is the power per pump.
- Depending on the design, the control circuit may require additional current beyond the rated value.
- Voltage code V1 refers to the following: 3 × 400 V ± 5 %, 50 Hz, N, PE.
- Design GC indicates that the pumps and the control panel are mounted on their own base frames. The base frames are separated. The control panel is for floor mounting and can be placed up to 3 meters from the pumps.
- Dimensions may vary by ±20 mm.

Hydro MPC-E with CRE, CRNE 125

Curve charts

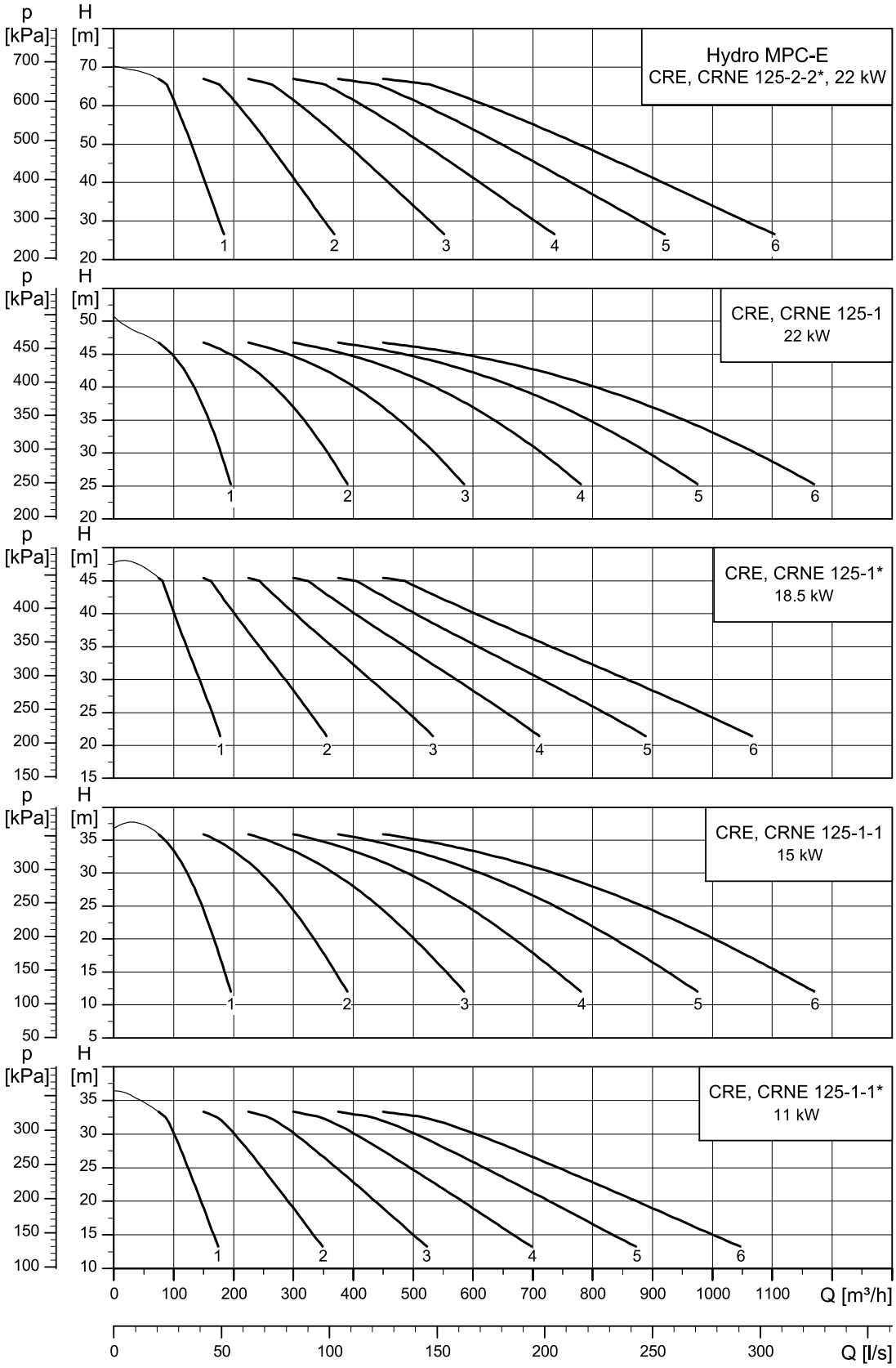

* For undersized motors, the maximum speed depends on the power usage.
Losses in fittings and valves are not included.

Dimensional sketch

Below is the dimensional sketch of the presented system in different designs. The system is shown as an example. The pumps and panel supplied may differ from the sketch.

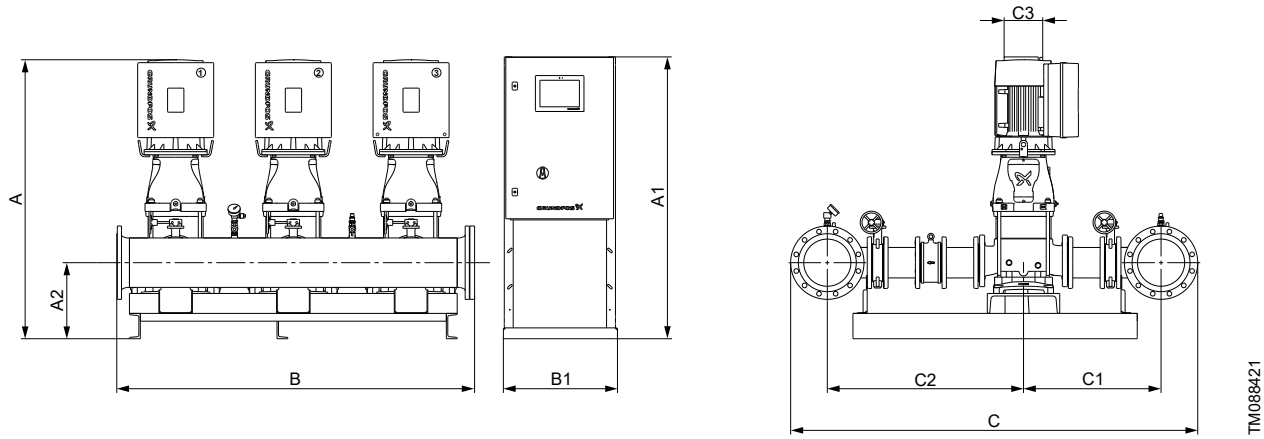

Design GD

Electrical data, dimensions and weights

Number of pumps	Pump type	Motor power [kW]	Motor type	Voltage code	Rated current [A]	Connections	A [mm]	A1 [mm]	A2 [mm]	B [mm]	B1 [mm]	C [mm]	C1 [mm]	C2 [mm]	C3 [mm]	Net weight [kg]	Design
2	CRE, CRNE 125-1-1 12)	11	•	V1	40	DN 250	1441	1460	432	1328	410	2440	860	1176	200	948	GD
	CRE, CRNE 125-1-1	15	•	V1	52.3	DN 250	1517	1460	432	1328	410	2440	860	1176	200	1000	GD
	CRE, CRNE 125-1 12)	18.5	•	V1	64.7	DN 250	1517	1460	432	1328	410	2440	860	1176	200	1010	GD
	CRE, CRNE 125-1	22	•	V1	76.1	DN 250	1543	1460	432	1328	630	2440	860	1176	300	1049	GD
	CRE, CRNE 125-2-2 12)	22	•	V1	76.1	DN 250	1665	1460	432	1328	630	2440	860	1176	300	1071	GD
3	CRE, CRNE 125-1-1 12)	11	•	V1	59.5	DN 250	1441	1460	432	1978	410	2440	860	1176	200	1321	GD
	CRE, CRNE 125-1-1	15	•	V1	78.1	DN 250	1517	1460	432	1978	410	2440	860	1176	200	1404	GD
	CRE, CRNE 125-1 12)	18.5	•	V1	96.7	DN 250	1517	1460	432	1978	410	2440	860	1176	200	1421	GD
	CRE, CRNE 125-1	22	•	V1	113.8	DN 250	1543	1460	432	1978	630	2440	860	1176	300	1469	GD
	CRE, CRNE 125-2-2 12)	22	•	V1	113.8	DN 250	1665	1460	432	1978	630	2440	860	1176	300	1501	GD
4	CRE, CRNE 125-1-1 12)	11	•	V1	79.1	DN 300	1441	1460	432	2630	410	2495	860	1176	200	1877	GD
	CRE, CRNE 125-1-1	15	•	V1	103.8	DN 300	1517	1460	432	2630	630	2495	860	1176	300	1981	GD
	CRE, CRNE 125-1 12)	18.5	•	V1	128.6	DN 300	1517	1460	432	2630	630	2495	860	1176	300	2018	GD
	CRE, CRNE 125-1	22	•	V1	151.4	DN 300	1543	1460	432	2630	630	2495	860	1176	300	2081	GD
	CRE, CRNE 125-2-2 12)	22	•	V1	151.4	DN 300	1665	1460	432	2630	630	2495	860	1176	300	2125	GD
5	CRE, CRNE 125-1-1 12)	11	•	V1	98.7	DN 350	1441	1460	432	3282	630	2555	860	1176	300	2325	GD
	CRE, CRNE 125-1-1	15	•	V1	129.6	DN 350	1517	1460	432	3282	630	2555	860	1176	300	2472	GD
	CRE, CRNE 125-1 12)	18.5	•	V1	160.6	DN 350	1517	1460	432	3282	630	2555	860	1176	300	2498	GD
	CRE, CRNE 125-1	22	•	V1	189.1	DN 350	1543	1460	432	3282	630	2555	860	1176	300	2583	GD
	CRE, CRNE 125-2-2 12)	22	•	V1	189.1	DN 350	1665	1460	432	3282	630	2555	860	1176	300	2637	GD

Number of pumps	Pump type	Motor power [kW]	Motor type	Voltage code	Rated current [A]	Connections	A [mm]	A1 [mm]	A2 [mm]	B [mm]	B1 [mm]	C [mm]	C1 [mm]	C2 [mm]	C3 [mm]	Net weight [kg]	Design
6	CRE, CRNE 125-1-1 [12)]	11	●	V1	118.3	DN 350	1441	1460	432	3932	630	2555	860	1176	300	2707	GD
	CRE, CRNE 125-1-1	15	●	V1	155.4	DN 350	1517	1460	432	3932	630	2555	860	1176	300	2879	GD
	CRE, CRNE 125-1 [12)]	18.5	●	V1	192.6	DN 350	1517	1460	432	3932	630	2555	860	1176	300	2915	GD
	CRE, CRNE 125-1	22	●	V1	226.8	DN 350	1543	1700	432	3932	830	2555	860	1176	300	3106	GD
	CRE, CRNE 125-2-2 [12)]	22	●	V1	226.8	DN 350	1665	1700	432	3932	830	2555	860	1176	300	3171	GD

[12)] Pump with undersized motor

Legend

● Three-phase motors

Additional notes

- Motor power is the power per pump.
- Depending on the design, the control circuit may require additional current beyond the rated value.
- Voltage code V1 refers to the following: 3 × 400 V ± 5 %, 50 Hz, N, PE.
- Design GD indicates that the pumps and the control panel are mounted on their own base frames. The base frames are separated. The control panel can be placed up to 3 meters from the pumps.
- Dimensions may vary by ±20 mm.

Hydro MPC-EC with CR, CRN 125

Curve charts

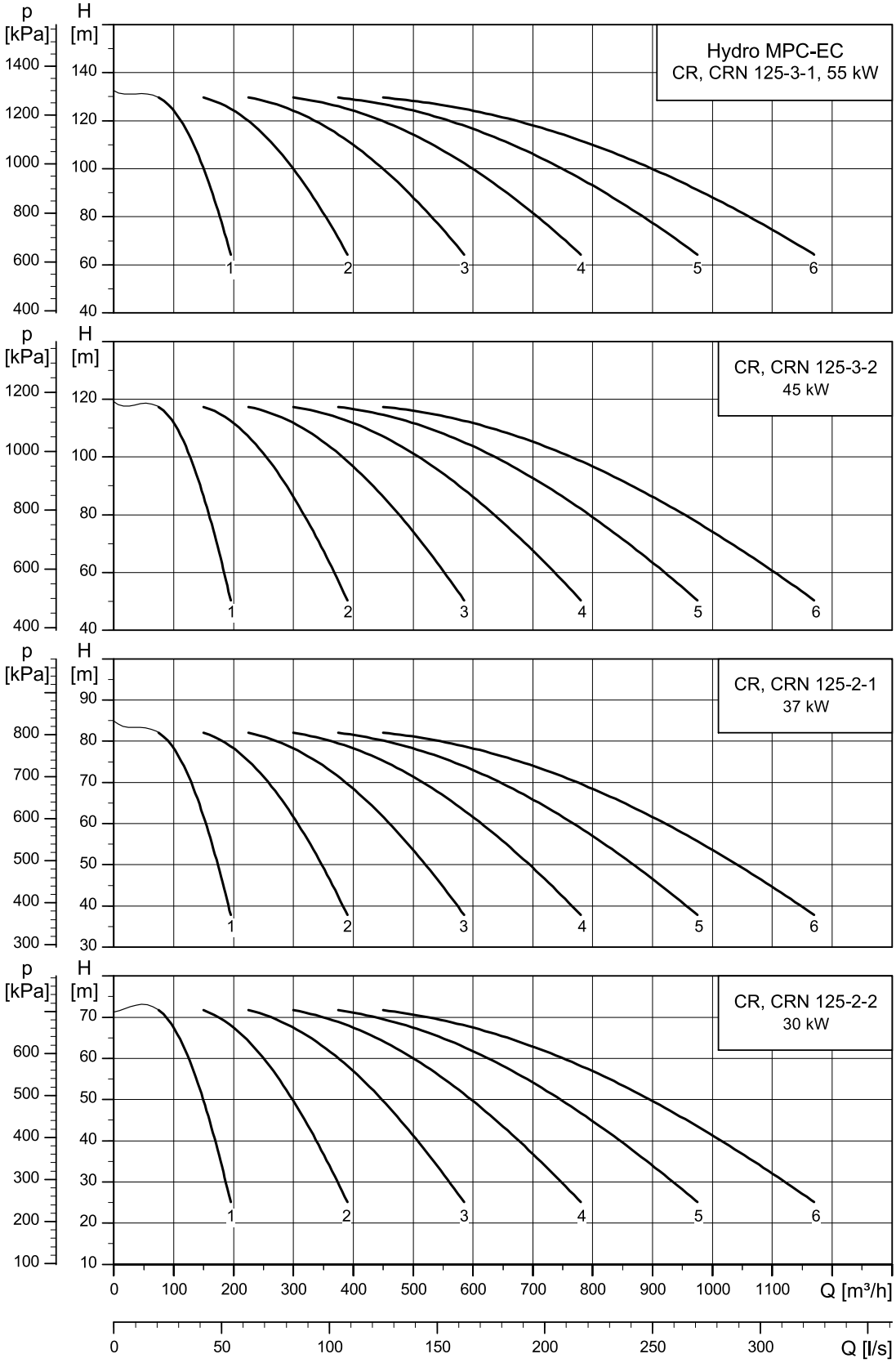

Losses in fittings and valves are not included.

Dimensional sketch

Below is the dimensional sketch of the presented system in different designs. The system is shown as an example. The pumps and panel supplied may differ from the sketch.

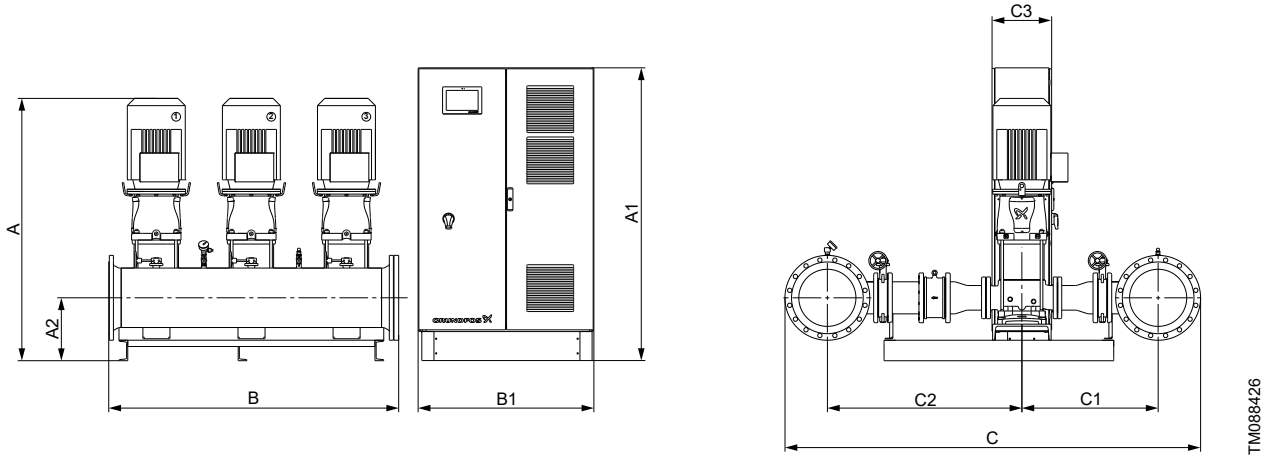

Design GC

Electrical data, dimensions and weights

Number of pumps	Pump type	Motor power [kW]	Motor type	Voltage code	Rated current [A]	Connections	A [mm]	A1 [mm]	A2 [mm]	B [mm]	B1 [mm]	C [mm]	C1 [mm]	C2 [mm]	C3 [mm]	Net weight [kg]	Design
2	CR, CRN 125-2-2	30	●	V1	110.8	DN 250	1770	1900	432	1328	1000	2440	860	1176	400	1553	GC
	CR, CRN 125-2-1	37	●	V1	132.8	DN 250	1795	1900	432	1328	1000	2440	860	1176	400	1660	GC
	CR, CRN 125-3-2	45	●	V1	164.8	DN 250	2012	1900	432	1328	1200	2440	860	1176	500	1899	GC
	CR, CRN 125-3-1	55	●	V1	192.8	DN 250	2050	1900	432	1328	1200	2440	860	1176	500	2165	GC
3	CR, CRN 125-2-2	30	●	V1	165.8	DN 250	1770	1900	432	1978	1200	2440	860	1176	400	2198	GC
	CR, CRN 125-2-1	37	●	V1	198.8	DN 250	1795	1900	432	1978	1200	2440	860	1176	400	2439	GC
	CR, CRN 125-3-2	45	●	V1	247.2	DN 250	2012	1900	432	1978	1600	2440	860	1176	500	2805	GC
	CR, CRN 125-3-1	55	●	V1	289.2	DN 250	2050	1900	432	1978	2000	2440	860	1176	500	3163	GC
4	CR, CRN 125-2-2	30	●	V1	221.2	DN 300	1770	1900	432	2630	1600	2495	860	1176	400	3140	GC
	CR, CRN 125-2-1	37	●	V1	265.2	DN 300	1795	1900	432	2630	1600	2495	860	1176	500	3246	GC
	CR, CRN 125-3-2	45	●	V1	329.2	DN 300	2012	1900	432	2630	2000	2495	860	1176	500	3729	GC
	CR, CRN 125-3-1	55	●	V1	385.7	DN 300	2050	1900	432	2630	2400	2495	860	1176	500	4224	GC
5	CR, CRN 125-2-2	30	●	V1	276.2	DN 350	1770	1900	432	3282	2000	2555	860	1176	400	3810	GC
	CR, CRN 125-2-1	37	●	V1	331.2	DN 350	1795	1900	432	3282	2400	2555	860	1176	500	3940	GC
	CR, CRN 125-3-2	45	●	V1	412	DN 350	2012	1900	432	3282	3000	2555	860	1176	500	4763	GC
	CR, CRN 125-3-1	55	●	V1	482	DN 350	2050	1900	432	3282	3000	2555	860	1176	500	5383	GC
6	CR, CRN 125-2-2	30	●	V1	331.2	DN 350	1770	1900	432	3932	2800	2555	860	1176	400	4408	GC
	CR, CRN 125-2-1	37	●	V1	397.7	DN 350	1795	1900	432	3932	2800	2555	860	1176	500	4590	GC
	CR, CRN 125-3-2	45	●	V1	494	DN 350	2012	1900	432	3932	3400	2555	860	1176	500	5540	GC
	CR, CRN 125-3-1	55	●	V1	578	DN 350	2050	1900	432	3932	3400	2555	860	1176	500	6321	GC

Legend

● Three-phase motors

Additional notes

- Motor power is the power per pump.
- Depending on the design, the control circuit may require additional current beyond the rated value.
- Voltage code V1 refers to the following: 3 × 400 V ± 5 %, 50 Hz, N, PE.
- Design GC indicates that the pumps and the control panel are mounted on their own base frames. The base frames are separated. The control panel is for floor mounting and can be placed up to 3 meters from the pumps.
- Dimensions may vary by ±20 mm.

Hydro MPC-E with CRE, CRNE 155

Curve charts

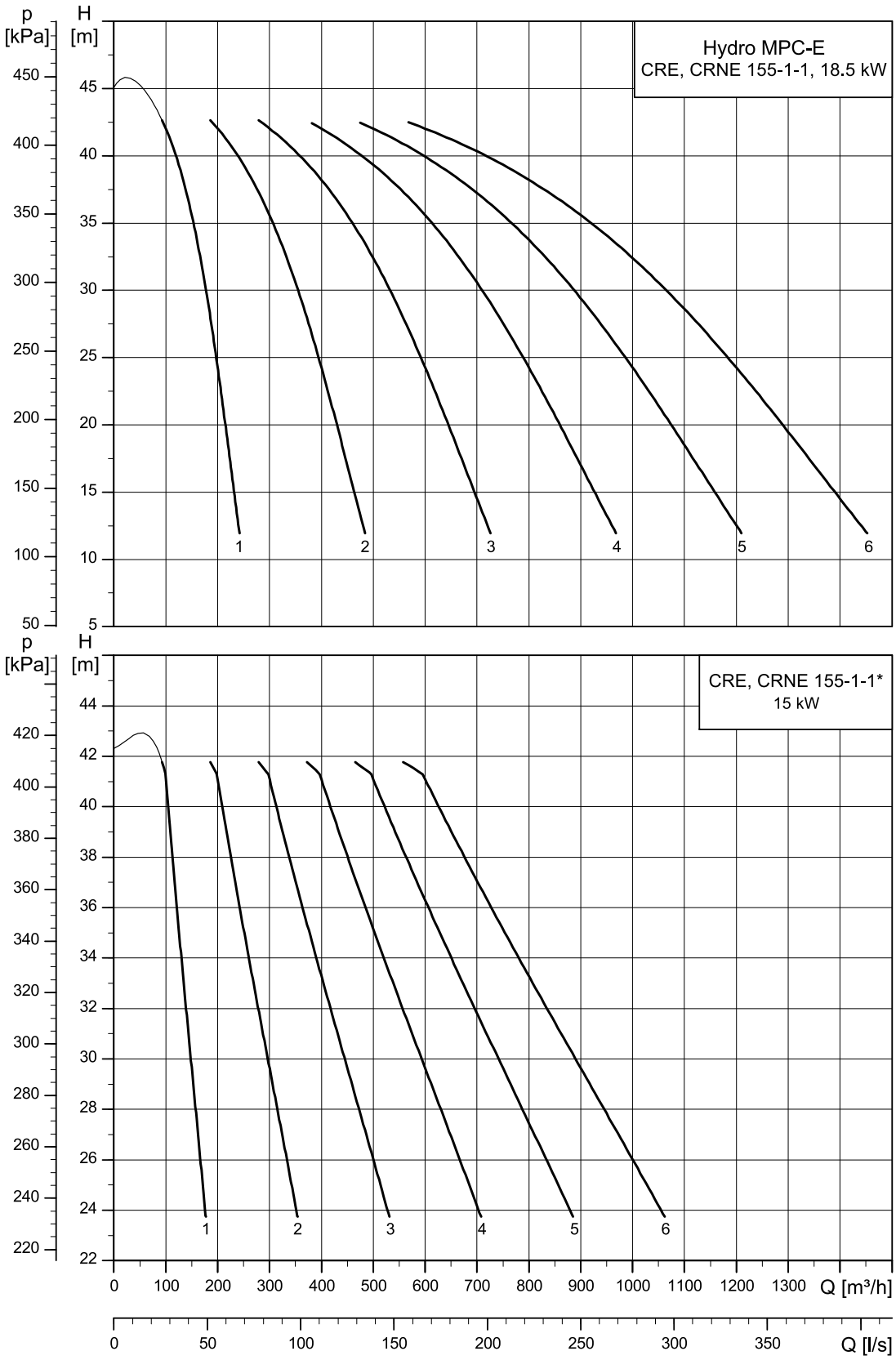

* For undersized motors, the maximum speed depends on the power usage.
Losses in fittings and valves are not included.

Dimensional sketch

Below is the dimensional sketch of the presented system in different designs. The system is shown as an example. The pumps and panel supplied may differ from the sketch.

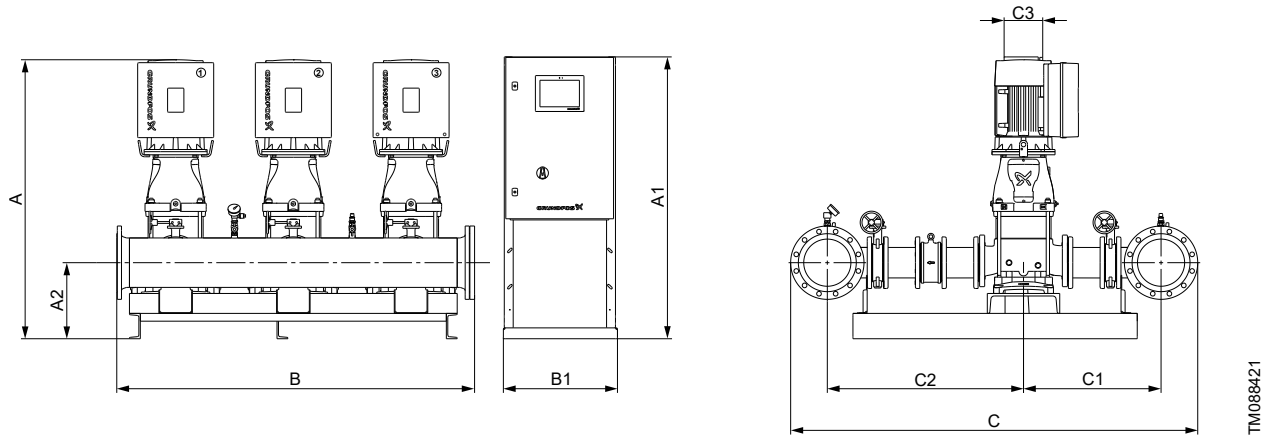

Design GD

Electrical data, dimensions and weights

Number of pumps	Pump type	Motor power [kW]	Motor type	Voltage code	Rated current [A]	Connections	A [mm]	A1 [mm]	A2 [mm]	B [mm]	B1 [mm]	C [mm]	C1 [mm]	C2 [mm]	C3 [mm]	Net weight [kg]	Design
2	CRE, CRNE 155-1-1 13)	15	●	V1	52.3	DN 250	1517	1460	432	1328	410	2688	947	1337	200	1105	GD
	CRE, CRNE 155-1-1	18.5	●	V1	64.7	DN 250	1517	1460	432	1328	410	2688	947	1337	200	1115	GD
3	CRE, CRNE 155-1-1 13)	15	●	V1	78.1	DN 300	1517	1460	432	1980	410	2743	947	1337	200	1602	GD
	CRE, CRNE 155-1-1	18.5	●	V1	96.7	DN 300	1517	1460	432	1980	410	2743	947	1337	200	1618	GD
4	CRE, CRNE 155-1-1 13)	15	●	V1	103.8	DN 350	1517	1460	432	2632	630	2803	947	1337	300	2267	GD
	CRE, CRNE 155-1-1	18.5	●	V1	128.6	DN 350	1517	1460	432	2632	630	2803	947	1337	300	2305	GD
5	CRE, CRNE 155-1-1 13)	15	●	V1	129.6	DN 400	1517	1460	432	3284	630	2863	947	1337	300	2750	GD
	CRE, CRNE 155-1-1	18.5	●	V1	160.6	DN 400	1517	1460	432	3284	630	2863	947	1337	300	2776	GD
6	CRE, CRNE 155-1-1 13)	15	●	V1	155.4	DN 400	1517	1460	432	3934	630	2863	947	1337	300	3234	GD
	CRE, CRNE 155-1-1	18.5	●	V1	192.6	DN 400	1517	1460	432	3934	630	2863	947	1337	300	3270	GD

13) Pump with undersized motor

Legend

● Three-phase motors

Additional notes

- Motor power is the power per pump.
- Depending on the design, the control circuit may require additional current beyond the rated value.
- Voltage code V1 refers to the following: 3 × 400 V ± 5 %, 50 Hz, N, PE.
- Design GD indicates that the pumps and the control panel are mounted on their own base frames. The base frames are separated. The control panel can be placed up to 3 meters from the pumps.
- Dimensions may vary by ±20 mm.

Hydro MPC-EC with CR, CRN 155

Curve charts

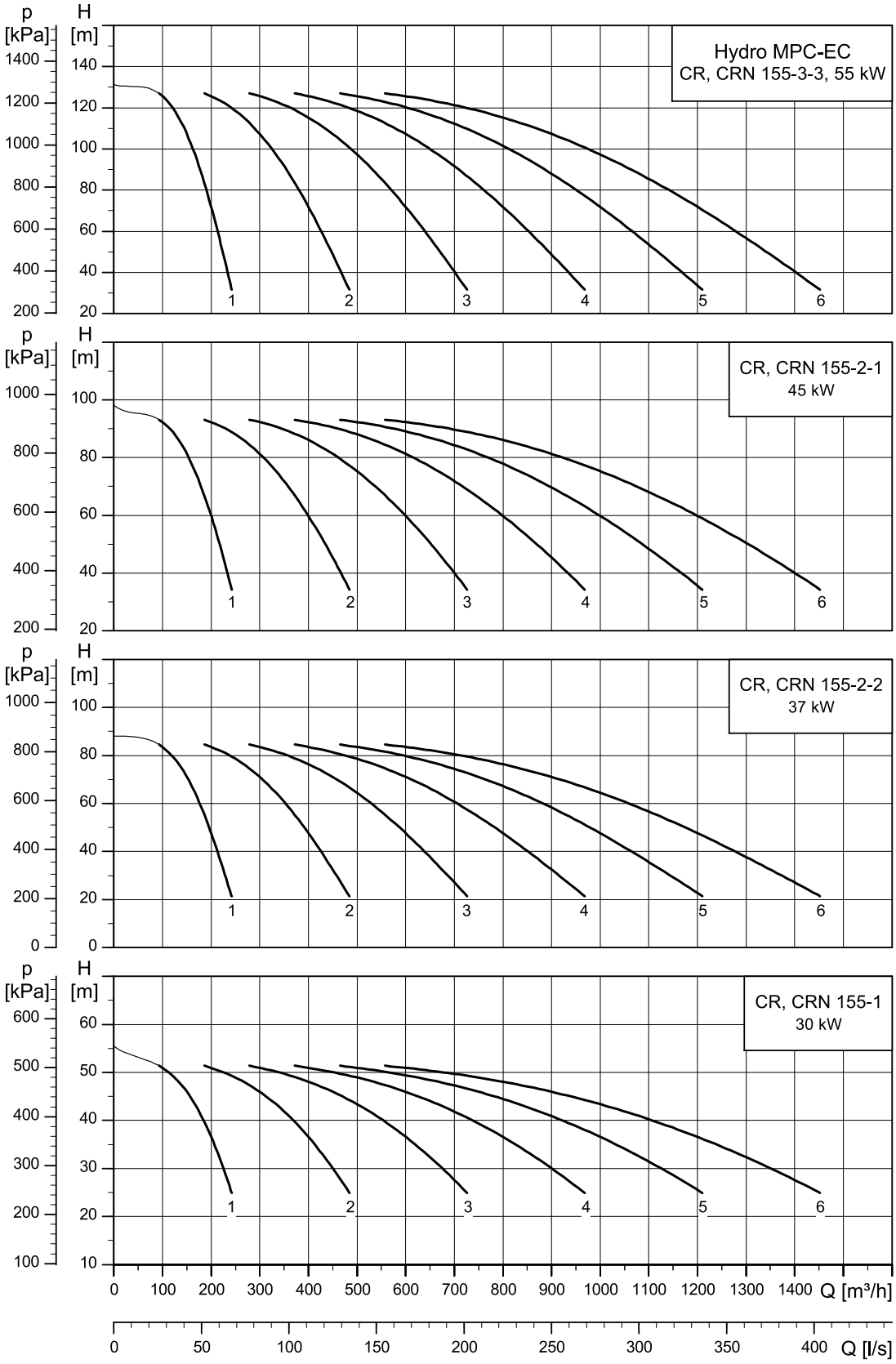

Losses in fittings and valves are not included.

Dimensional sketch

Below is the dimensional sketch of the presented system in different designs. The system is shown as an example. The pumps and panel supplied may differ from the sketch.

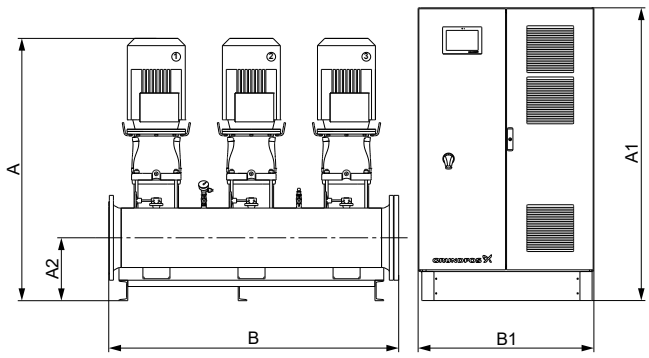

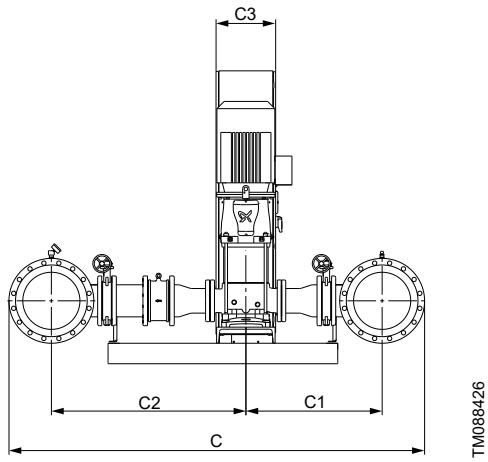

Design GC

Electrical data, dimensions and weights

Number of pumps	Pump type	Motor power [kW]	Motor type	Voltage code	Rated current [A]	Connections	A [mm]	A1 [mm]	A2 [mm]	B [mm]	B1 [mm]	C [mm]	C1 [mm]	C2 [mm]	C3 [mm]	Net weight [kg]	Design
2	CR, CRN 155-1	30	●	V1	110.8	DN 250	1648	1900	432	1328	1000	2688	947	1337	400	1636	GC
	CR, CRN 155-2-2	37	●	V1	132.8	DN 250	1795	1900	432	1328	1000	2688	947	1337	400	1765	GC
	CR, CRN 155-2-1	45	●	V1	164.8	DN 250	1890	1900	432	1328	1200	2688	947	1337	500	1942	GC
	CR, CRN 155-3-3	55	●	V1	192.8	DN 250	2050	1900	432	1328	1200	2688	947	1337	600	2270	GC
3	CR, CRN 155-1	30	●	V1	165.8	DN 300	1648	1900	432	1980	1200	2743	947	1337	400	2363	GC
	CR, CRN 155-2-2	37	●	V1	198.8	DN 300	1795	1900	432	1980	1200	2743	947	1337	400	2637	GC
	CR, CRN 155-2-1	45	●	V1	247.2	DN 300	1890	1900	432	1980	1600	2743	947	1337	500	2909	GC
	CR, CRN 155-3-3	55	●	V1	289.2	DN 300	2050	1900	432	1980	2000	2743	947	1337	500	3361	GC
4	CR, CRN 155-1	30	●	V1	221.2	DN 350	1648	1900	432	2632	1600	2803	947	1337	400	3383	GC
	CR, CRN 155-2-2	37	●	V1	265.2	DN 350	1795	1900	432	2632	1600	2803	947	1337	500	3533	GC
	CR, CRN 155-2-1	45	●	V1	329.2	DN 350	1890	1900	432	2632	2000	2803	947	1337	500	3893	GC
	CR, CRN 155-3-3	55	●	V1	385.7	DN 350	2050	1900	432	2632	2400	2803	947	1337	500	4512	GC
5	CR, CRN 155-1	30	●	V1	276.2	DN 400	1648	1900	432	3284	2000	2863	947	1337	400	4034	GC
	CR, CRN 155-2-2	37	●	V1	331.2	DN 400	1795	1900	432	3284	2400	2863	947	1337	500	4219	GC
	CR, CRN 155-2-1	45	●	V1	412	DN 400	1890	1900	432	3284	3000	2863	947	1337	500	4887	GC
	CR, CRN 155-3-3	55	●	V1	482	DN 400	2050	1900	432	3284	3000	2863	947	1337	500	5663	GC
6	CR, CRN 155-1	30	●	V1	331.2	DN 400	1648	1900	432	3934	2800	2863	947	1337	400	4698	GC
	CR, CRN 155-2-2	37	●	V1	397.7	DN 400	1795	1900	432	3934	2800	2863	947	1337	500	4946	GC
	CR, CRN 155-2-1	45	●	V1	494	DN 400	1890	1900	432	3934	3400	2863	947	1337	500	5710	GC
	CR, CRN 155-3-3	55	●	V1	578	DN 400	2050	1900	432	3934	3400	2863	947	1337	500	6677	GC

Legend

● Three-phase motors

Additional notes

- Motor power is the power per pump.
- Depending on the design, the control circuit may require additional current beyond the rated value.
- Voltage code V1 refers to the following: 3 × 400 V ± 5 %, 50 Hz, N, PE.
- Design GC indicates that the pumps and the control panel are mounted on their own base frames. The base frames are separated. The control panel is for floor mounting and can be placed up to 3 meters from the pumps.
- Dimensions may vary by ±20 mm.

5. Document quality feedback

To provide feedback about this document, scan the QR-code using your phone's camera or a QR code app.

Click here to submit your feedback

© Grundfos Holding A/S 05.2026

93569238

ECM: 1443113	05.2026

Grundfos Holding A/S
Poul Due Jensens Vej 7
DK-8850 Bjerringbro
Tel: +45 87 50 14 00
www.grundfos.com

GRUNDFOS