Service kit catalogue

CM, CME and Boosters

GRUNDFOS

Table of contents

1. CM, CME and Boosters 3
CM, CME. 3
CM Self-priming 14
CME Booster 16
CM Booster PT, PS 18
CMB PM1, CMB PM2 18

1. CM, CME and Boosters

CM, CME

50/60 Hz

Impeller and spacing pipe kits
Kit contents

Pos.	Description
49	Impeller
64a	Spacing pipe
47a	Intermediate bearing

CM A-version (Cast iron EN-GJL-200), 1-8 stages

	Stages							
Pump type	1	2	3	4	5	6	7	8
CM 1	-	92685285	92685286	92685287	92685288	92685289	92685290	92685291
CM 3	-	92685318	92685319	92685320	92685321	92685322	92685323	92685324
CM 5	-	92685361	92685362	92685363	92685364	92685365	92685366	92685367
CM 10	92685392	92685393	92685394	92685395	92685396	-	-	-
CM 15	92685413	92685414	92685416	92685417	-	-	-	-
CM 25	92685426	92685427	92685428	92685429	-	-	-	-

CM G-version (Stainless steel - 1.4401 DIN W.-Nr./316 AISI), 1-8 stages

	Stages							
Pump type	1	2	3	4	5	6	7	8
CM 1	-	92685305	92685306	92685307	92685308	92685309	92685310	92685311
CM 3	-	92685338	92685339	92685340	92685341	92685342	92685343	92685344
CM 5	-	92685380	92685381	92685382	92685383	92685384	92685385	92685386
CM 10	92685405	92685406	92685407	92685408	92685409	92685410	92685411	92685412
CM 15	92685422	92685423	92685424	92685425	-	-	-	-
CM 25	92685434	92685435	92685436	92685437	-	-	-	-
CM 32	-	93557570	-	-	-	-	-	-

CM G-version (Stainless steel - 1.4401 DIN W.-Nr./316 AISI), 9-14 stages

	Stages					
Pump type	9	10	11	12	13	14
CM 1	92685312	92685313	926853014	92685315	92685316	92685317
CM 3	92685345	926853346	92685347	92685348	92685349	92685360
CM 5	92685387	92685388	92685389	92685390	92685391	-
CM 10	-	-	-	-	-	-
CM 15	-	-	-	-	-	-
CM 25	-	-	-	-	-	-

CM I-version (Stainless steel - I - 1.4301 DIN W.-Nr./304 AISI), 1-8 stages

	Stages							
Pump type	1	2	3	4	5	6	7	8
CM 1	-	92685292	92685293	92685294	92685295	92685296	92685297	92685298
CM 3	-	92685325	92685326	92685327	92685328	92685329	92685330	92685331
CM 5	-	92685368	92685369	92685370	92685371	92685372	92685373	92685374
CM 10	92685397	92685398	92685399	92685400	92685401	92685402	92685403	92685404
CM 15	92685418	92685419	92685420	92685421	-	-	-	-
CM 25	92685430	92685431	92685432	92685433	-	-	-	-

CM I-version (Stainless steel - I - 1.4301 DIN W.-Nr./304 AISI), 9-14 stages

	Stages					
Pump type	9	10	11	12	13	14
CM 1	92685299	92685300	92685301	92685302	92685303	92685304
CM 3	92685332	92685333	92685334	92685335	92685336	92685337
CM 5	92685375	92685376	92685377	92685378	92685379	-
CM 10	-	-	-	-	-	-
CM 15	-	-	-	-	-	-
CM 25	-	-	-	-	-	-

Drain plug, CM

Pos.	Kit No.		96932395	96932396
	Description	Material	E/V	K
25	Drain plug	-	2	2
11	O-ring for plug	EPDM	2	-
		FKM	2	-
		FFKM	-	2

Motor bearing kits
CM with fixed speed MG and ML motors

Pos.	Motor type	MG, ML 71/80	MG, ML 90	MG, ML 100	MG, ML 112/132	MG, ML 132 for CM 32 hydraulic
	Kit No.	96932399	96932400	96932412	96932413	93557558
79	Diverting disc	1	1	1	1	1
151a	Installation indicator	1	1	1	1	1
153	Ball bearing	1	1	1	1	1
154	Ball bearing	1	1	1	1	1
155	Bearing cover plate	1	1	1	1	1
157a	Gasket	1	1	-	-	1
158	Corrugated spring	1	1	1	1	1
158a	O-ring (HNBR)	1	1	1	1	1
159	O-ring (NBR)	1	1	1	1	1
159a	Seal ring	1	1	1	1	1
184	O-ring	-	-	-	1	1

CME pumps with variable speed MGE and MLE motors

Pos.	Motor type	MGE, MLE 71/80	MGE, MLE 90	MGE, MLE 100/112C	MGE, MLE 112E	MGE, MLE 132	MGE, MLE 132 for CME 32 hydraulic
	Kit No.	92708240	92708243	92708247	92708248	92708249	93557558
79	Diverting disc	1	1	1	1	1	1
106	O-ring (NBR)	-	-	-	-	1	-
107	O-ring (NBR)	1	1	-	-	-	-
150b	O-ring (NBR)	-	-	1	-	2	-
151a	Installation indicator	1	1	1	1	1	-
153	Ball bearing	1	1	1	1	1	1
154	Ball bearing	1	1	1	1	1	1
155	Bearing cover plate	1	1	1	1	1	1
157a	Gasket	1	1	-	-	-	1
158	Corrugated spring	1	1	1	1	1	1
158a	O-ring (HNBR)	1	1	1	1	1	1
159	O-ring (NBR)	-	-	1	-	-	1
159a	Seal ring	1	1	1	1	1	1

Neck ring

Pos.	Pump type	CM 1/3/5	CM 1/3/5	CM 10/15/25	CM 10/15/25
			Cold		Cold
	Kit No.	*96932397*	*96932447*	*96932398*	*96932448*
	Description	All	All	All	All
45	Neck ring	14	14	8	8
65	Neck ring retainer	14	14	8	8

CM 1, 3, 5 (A version)

Cast iron

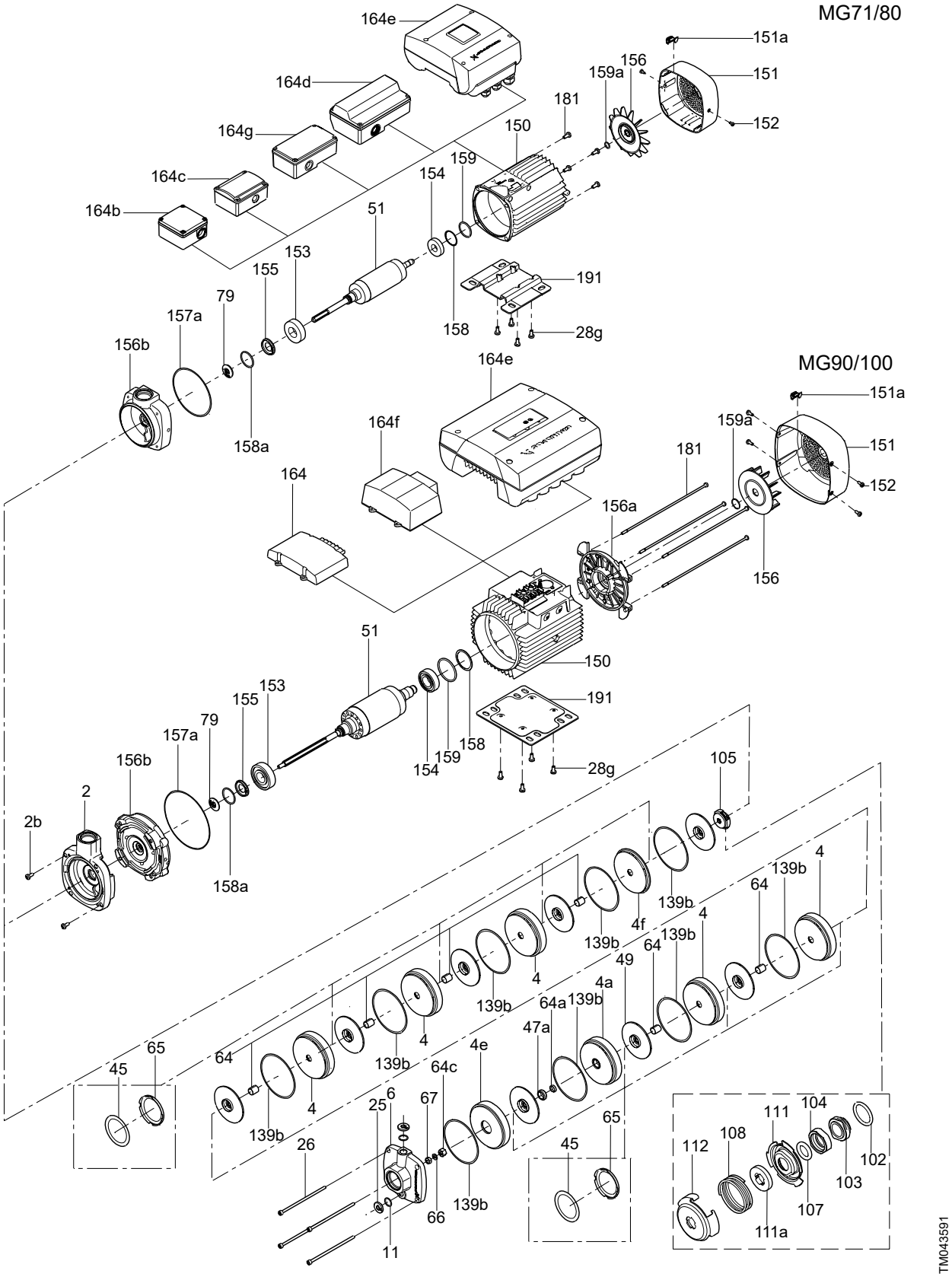

CM 1, 3, 5 (I and G version)

Stainless steel

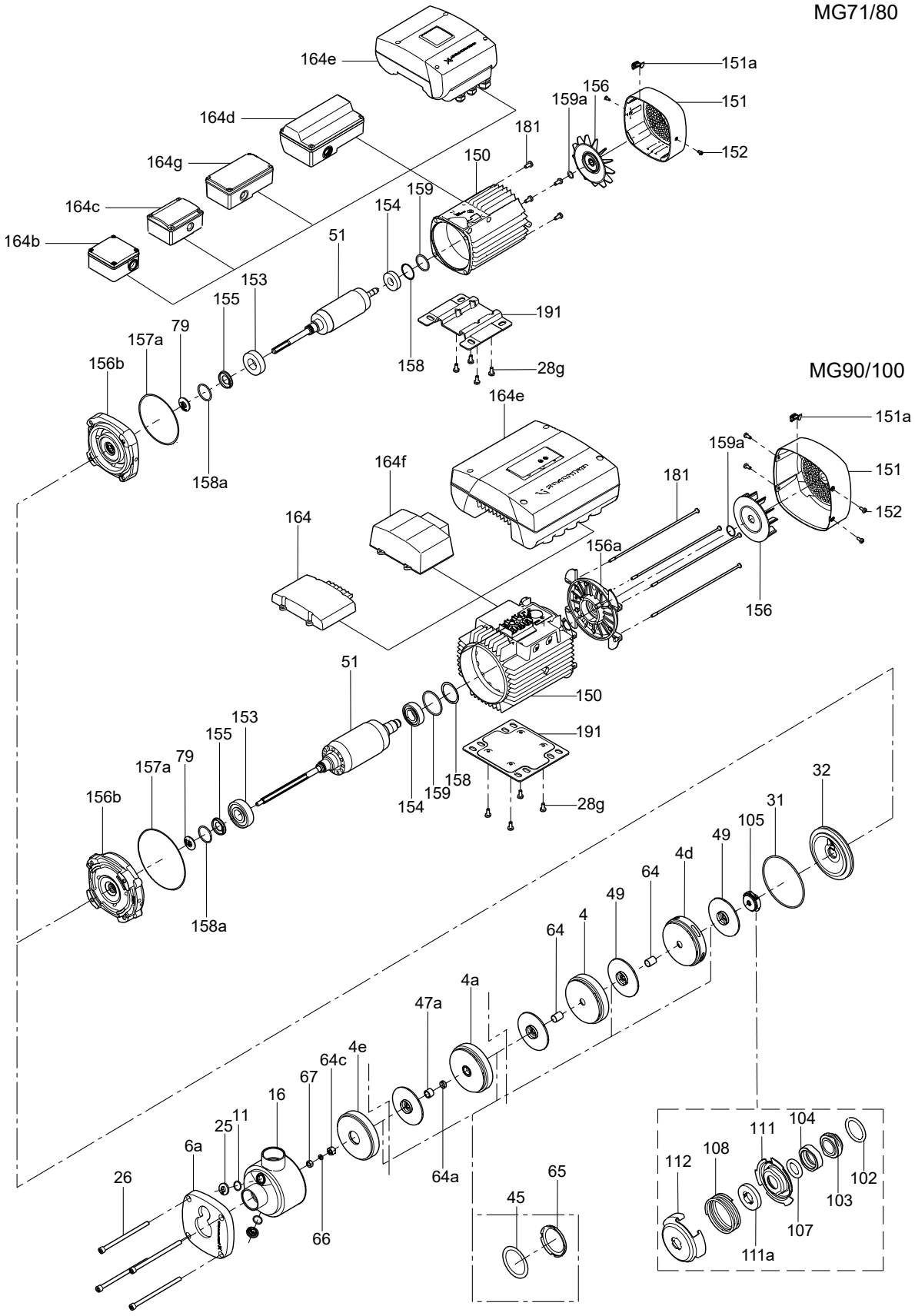

CM 10, 15, 25 (A version)

Cast iron

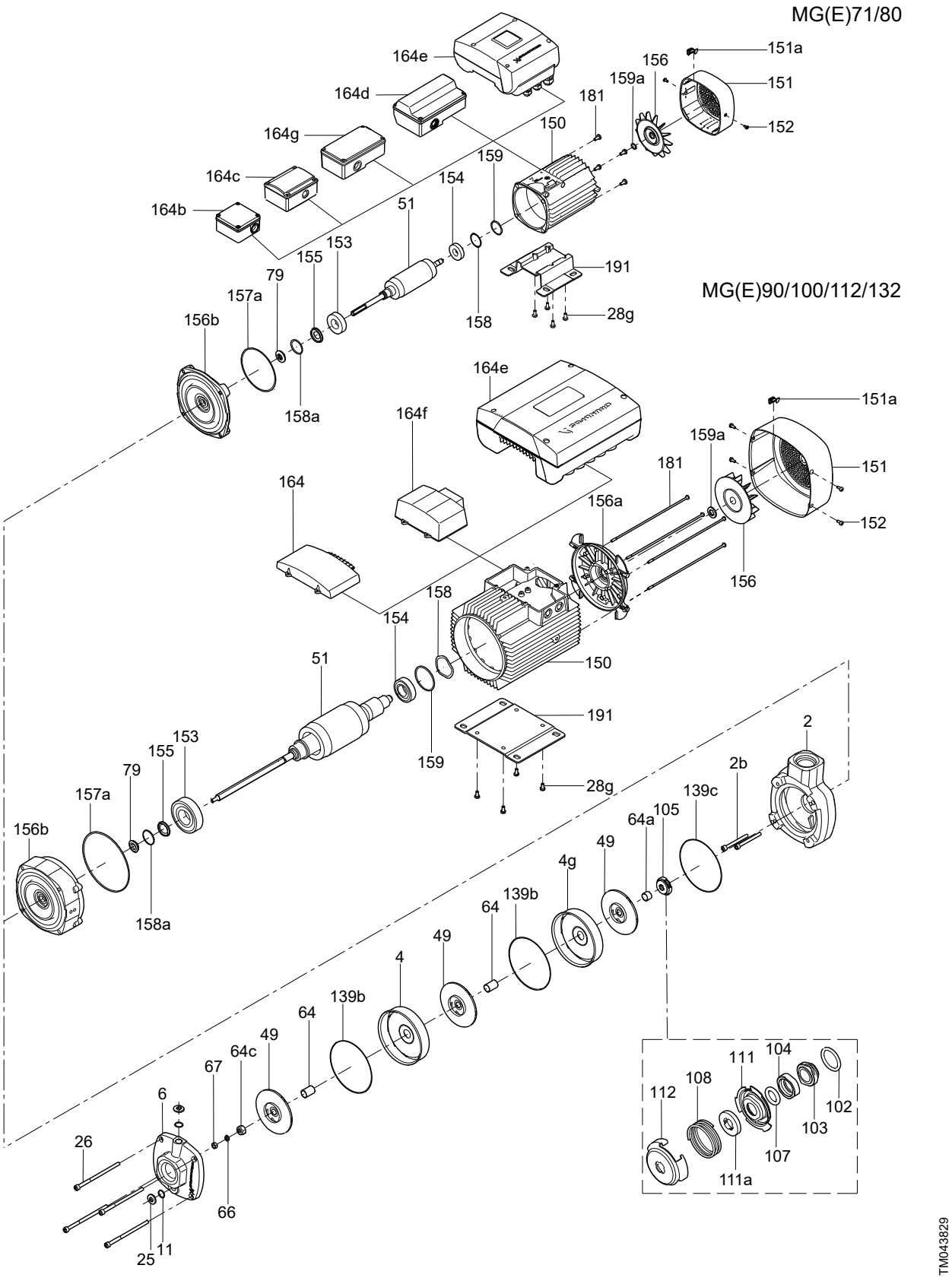

CM 10, 15, 25 (I and G version)

Stainless steel

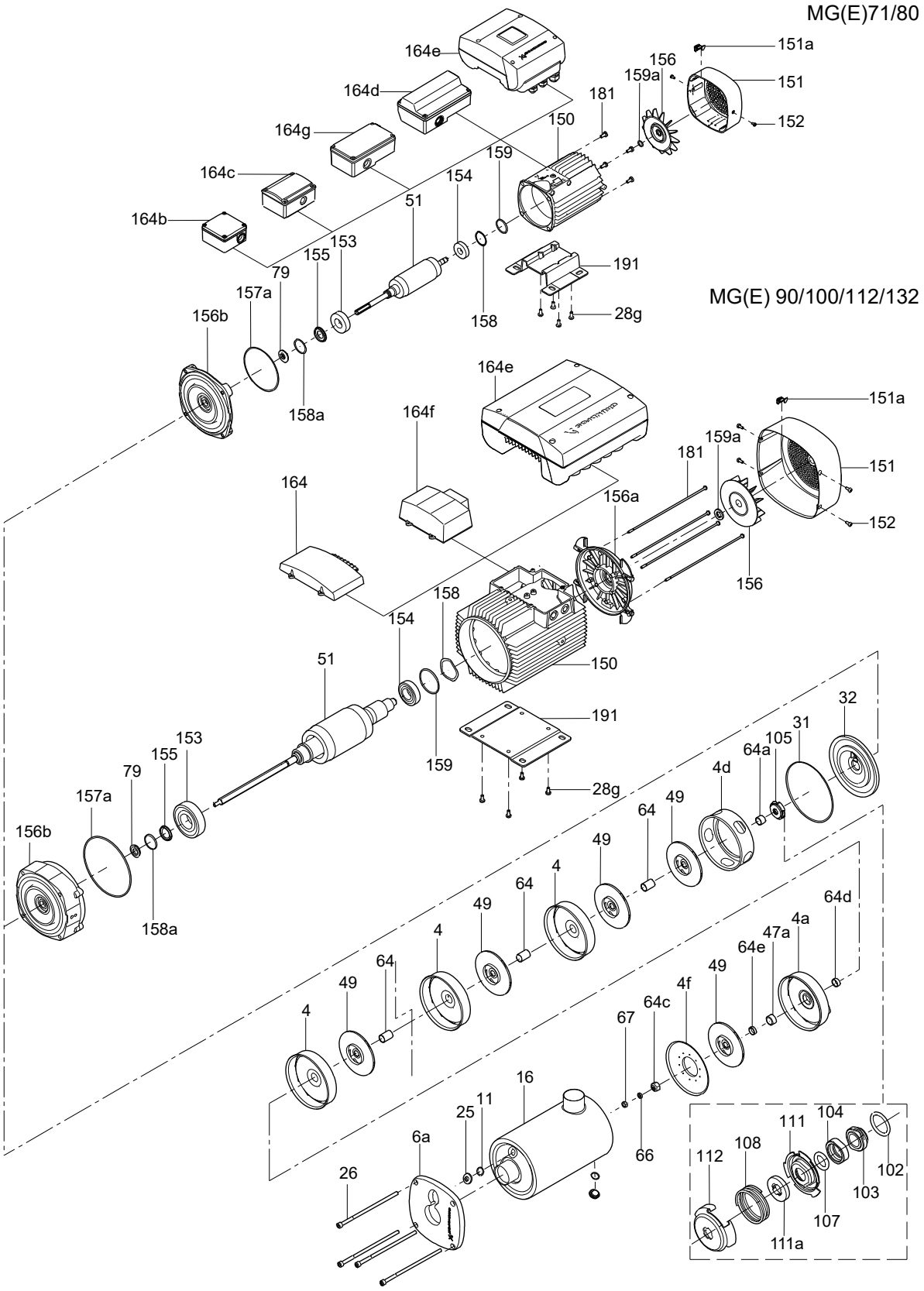

CM 32 (G version)

Stainless steel

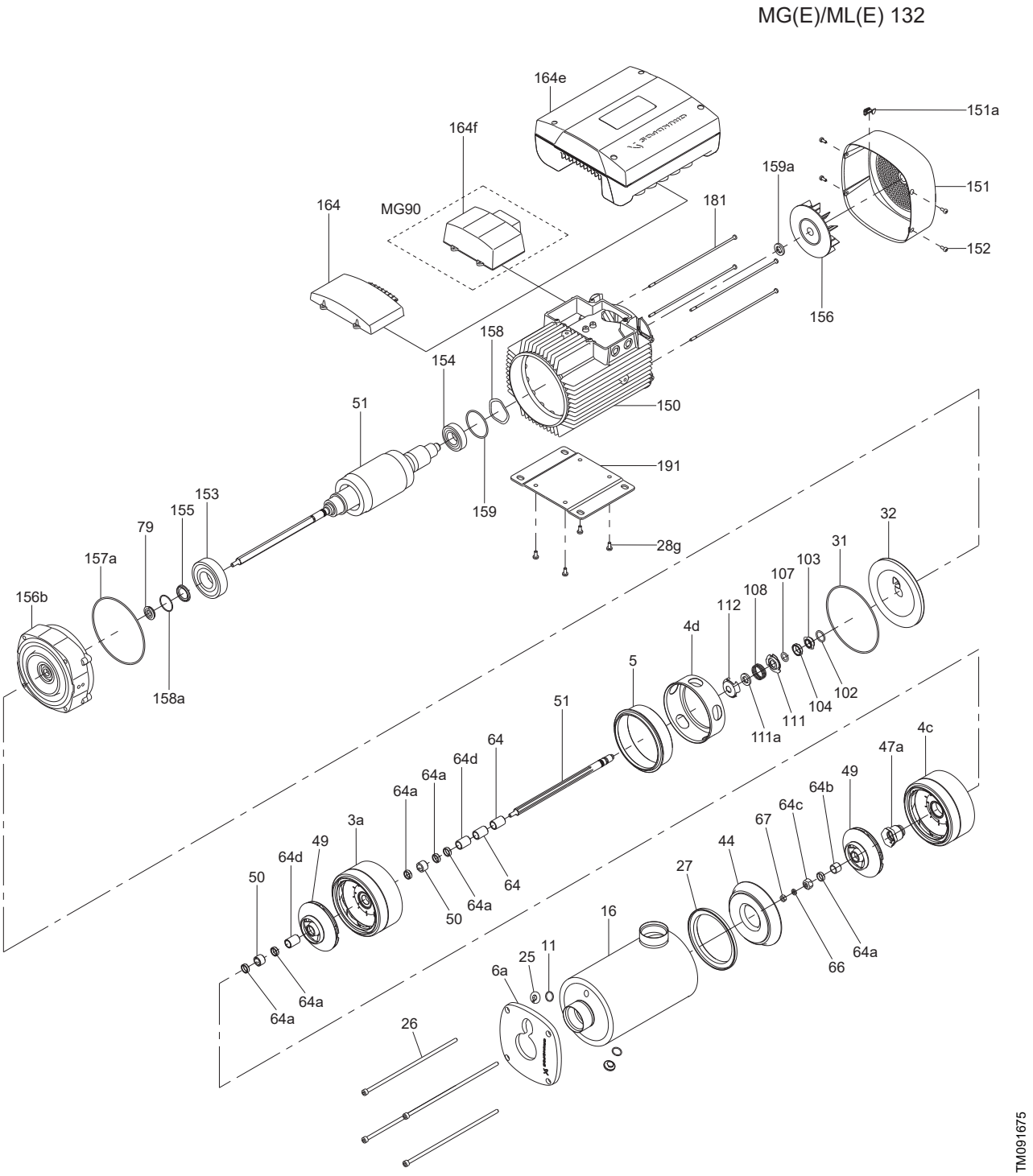

Seal kit (A version)

Pos.		Pump type		CM 1/3/5				
		Kit No.		96932350	96932392	988219372	98821938	98092347
		Description	Material	AVBE/V	AQQE/V	AUQE/V	AQBE/V	AQBE
105	102	O-ring	EPDM	1	1	1	1	1
			FKM	1	1	1	1	-
	103	Stationary seal ring	SIC	-	1	1	-	-
			Carbon	1	-	-	1	1
	104	Rotating seal ring	SIC	-	1	-	1	1
			Al2O3	1	-	1	-	-
	107	O-ring	EPDM	1	1	1	1	1
			FKM	1	1	1	1	-
	111	Seal ring retainer	-	1	1	1	1	1
	108	Spring	-	1	1	1	1	1
	111a	Stop ring	-	1	1	1	1	1
	112	Seal driver	-	1	1	1	1	1
139b		Gasket	-	10	10	10	10	5
139c		Gasket ∅144.5/D137.5 × 0.5	-	-	-	-	-	-
64c		Clamp	-	1	1	1	1	1
66		Lock washer (Nord-lock)	-	1	1	1	1	1
67		Nut	-	1	1	1	1	1

Pos.		Pump type		CM 10/15/25			
		Kit No.		96932393	96932394	98821932	98821933
		Description	Material	AVBE/V	AQQE/V	AUQE/V	AQBE/V
105	102	O-ring	EPDM	1	1	1	1
			FKM	1	1	1	-
	103	Stationary seal ring	SIC	-	1	1	-
			Carbon	1	-	-	1
	104	Rotating seal ring	SIC	-	1	-	1
			Al2O3	1	-	1	-
	107	O-ring	EPDM	1	1	1	1
			FKM	1	1	1	-
	111	Seal ring retainer	-	1	1	1	1
	108	Spring	-	1	1	1	1
	111a	Stop ring	-	1	1	1	1
	112	Seal driver	-	1	1	1	1
139b		Gasket	-	6	6	10	5
139c		Gasket ∅144.5/D137.5 × 0.5	-	1	1	-	-
64c		Clamp	-	1	1	1	1
66		Lock washer (Nord-lock)	-	1	1	1	1
67		Nut	-	1	1	1	1

Seal kit (I and G version)

Pos.		Pump type		CM 1/3/5					
		Kit No.		96932438	96932440	96932441	98810275	98806252	98463764
		Description	Material	AVBE/V	AQQE/V	AQQK	AQBE/V	AUQE/V	AQQK/E/V
105	102	O-ring	EPDM	1	1	-	1	1	-
			FKM	1	1	-	1	1	-
			FFKM	-	-	1	-	-	1
	103	Stationary seal ring	SIC	-	1	1	-	1	1
			Carbon	1	-	-	1	-	-
	104	Rotating seal ring	SIC	-	1	1	1	-	1
			Al2O3	1	-	-	-	1	-
	107	O-ring	EPDM	1	1	-	1	1	-
			FKM	1	1	-	1	1	-
			FFKM	-	-	1	-	-	1
	111	Seal ring retainer	-	1	1	1	1	1	1
	108	Spring	-	1	1	1	1	1	1
	111a	Stop ring	-	1	1	1	1	1	1
	112	Seal driver	-	1	1	1	1	1	1
31		O-ring	EPDM	1	1	-	1	1	1
			FKM	1	1	-	1	1	1
			FFKM	-	-	1	-	-	-
64c		Clamp	-	1	1	1	1	1	1
66		Lock washer (Nord-lock)	-	1	1	1	1	1	1
67		Nut	-	1	1	1	1	1	1

Pos.		Pump type		CM 10/15/25/32					
		Kit No.		96932443	96932445	96932446	98821912	98821920	98463766
		Description	Material	AVBE/V	AQQE/V	AQQK	AQBE/V	AUQE/V	AQQK/E/V
105	102	O-ring	EPDM	1	1	-	1	1	-
			FKM	1	1	-	1	1	-
			FFKM	-	-	1	-	-	1
	103	Stationary seal ring	SIC	-	1	1	-	1	1
			Carbon	1	-	-	1	-	-
	104	Rotating seal ring	SIC	-	1	1	1	-	1
			Al2O3	1	-	-	-	1	-
	107	O-ring	EPDM	1	1	-	1	1	-
			FKM	1	1	-	1	1	-
			FFKM	-	-	1	-	-	1
	111	Seal ring retainer	-	1	1	1	1	1	1
	108	Spring	-	1	1	1	1	1	1
	111a	Stop ring	-	1	1	1	1	1	1
	112	Seal driver	-	1	1	1	1	1	1
31		O-ring	EPDM	1	1	-	1	1	1
			FKM	1	1	-	1	1	1
			FFKM	-	-	1	-	-	-
64c		Clamp	-	1	1	1	1	1	1
66		Lock washer (Nord-lock)	-	1	1	1	1	1	1
67		Nut	-	1	1	1	1	1	1

Kit, chamber stack

Pos.	Pump type	CM 32-2
	Kit No.	**93557557**
27	Adapter ring, CM32	1
44	Suction interconnector cpl. w. neck ring N	1
67	Lock nut, shaft M8, splined	1
66	Wedge lock washer set, M8	1
64c	Clamp, CM	1
111a	Stop ring for ∅16 shaft	1
64a	Spacing pipe, CM 10/15/25 w. bearing (5.8 mm)	6
64b	Spacing pipe, CM 10/15/25 (15.1 mm)	1
64d	Spacing pipe, CM 10/15/25, I, G reinforced (28.44 mm)	2
64	Spacing pipe, CM 10/15/25, A reinforced (28.88 mm)	2
49	Impeller cpl., CM 32	2
47a	Bearing cpl. rotating, SIC CR/N32	1
4c	Intermediate chamber cpl. w. bear. and neck. CR32	1
50	Impeller ring CM 32	2
3a	Intermediate chamber cpl. w. neck ring N, MTR32	1
5	Chamber interconnector, CM 32	1
4d	Chamber with holes, CM 10/15/25 (1.4401)	1

Spare sleeve

Pos.	Pump type	CM 32-2
	Thread	**Kit No.**
16	Rp	93557574
	NPT	93557578

CM Self-priming

50/60 Hz

Impeller and spacing pipe kits
Kit contents

Pos.	Description
49	Impeller
64a	Spacing pipe
47a	Intermediate bearing
64f	Rubber seal
64g	Seal container

CM I-version (Stainless steel - I - 1.4301 DIN W.-Nr./304 AISI), 1-7 stages

	Stages						
Pump type	1	2	3	4	5	6	7
CM 1	-	-	*92685438*	*92685439*	*92685440*	*92685441*	-
CM 3	-	-	*92685442*	*92685443*	*92685444*	*92685445*	-
CM 5	-	-	*92685446*	*92685447*	*92685448*	*92685449*	*92685450*

Spares

Pos.	Description	Kit No.
4d	Spare, Air seperator chamber	*98520101*
4f	Spare, Empty chamber 27mm	*98520102*
4f	Spare, Empty chamber 18mm	*98520103*
64a	Spare, Spacing pipe 13mm	*98520104*

Spare sleeves

Pos.	Description	Kit No.	Model / Version / Qty
16	Sleeve CM1/3-7 Rp thread	*98470942*	CM-SP 1/3/5-3/4
	Sleeve CM1/3-9 Rp thread	*98470943*	CM-SP 1/3/5-5/6
	Sleeve CM1/3-11 Rp thread	*98470949*	CM-SP 5-7

Valve kit

Pos.	Kit No.	*98519018*	*98519013*
	Description	4 meters	8 meters
4e 5d 5e	Chamber cpl. w. valve	1	1
64f 64g	Container with rubber seal	1	1
5b	Water trap	1	1
5c	O-ring EPDM 37.0 × 2.62	1	1

CM self-priming

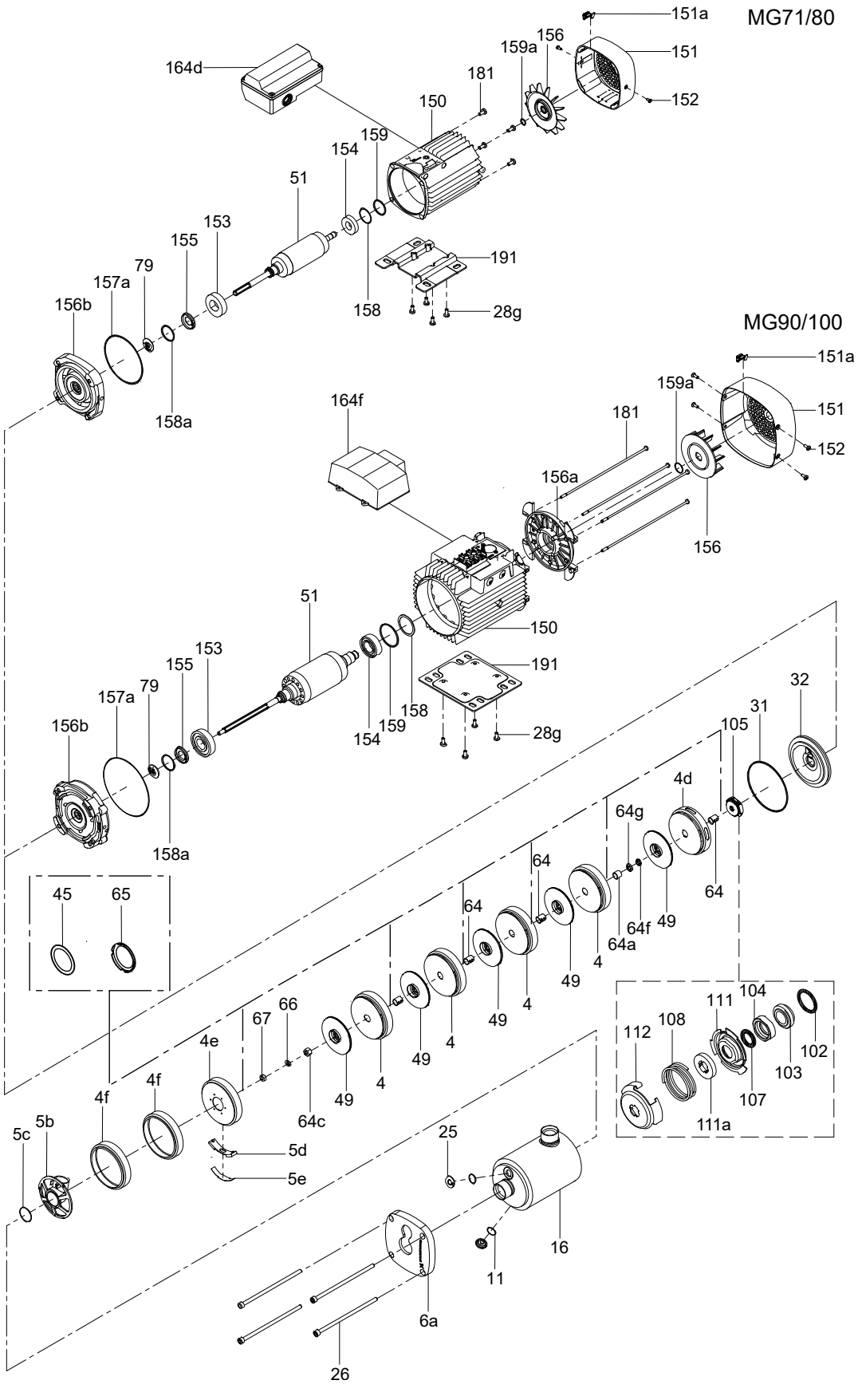

CME Booster

50/60 Hz

Manometer

Pos.	Kit No.	98906914	98906915
	Manometer thread	Rp	NPT
462	Manometer 0-16 bar	1	-
462	Manometer 0-200 PSI	-	1

Non-return valve (RP and NPT)

Pos.	Kit No.	98906916	98906917
	Valve size	1"	1 1/2"
405a	Gate	1	1
405b	Spring material	1	1
405c	O-ring	1	1
405d	Washer	-	1

Pressure tank

Pos.	Kit No.	98906908	98906909
	Tank thread	Rp	NPT
305	2 liter GT-H tank with Rp thread	1	-
305	2 liter GT-H tank with NPT thread	-	1

Sensor kit

Pos.	Kit No.	98906904	91136170
	Sensor thread	Rp	NPT
461a	Sensor MBS 1900 0-10 bar	1	1

German version with inlet pressure switch

Inlet pressure switch

Pos.	Kit No.	99010690
	External thmandatory-read	Rp
407	Inlet pressure switch	1

Manometer

Pos.	Kit No.	99010691
	Manometer thread	Rp
462	Manometer	1

CME Booster

CMBE German version with pressure switch

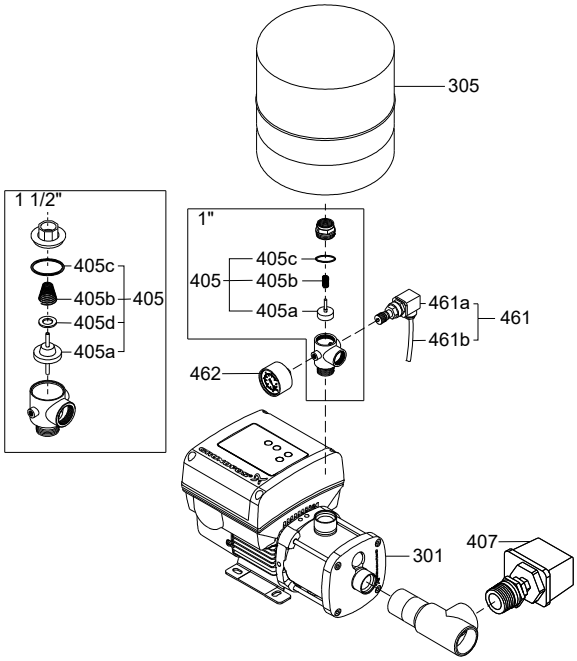

TM065177

CMBE

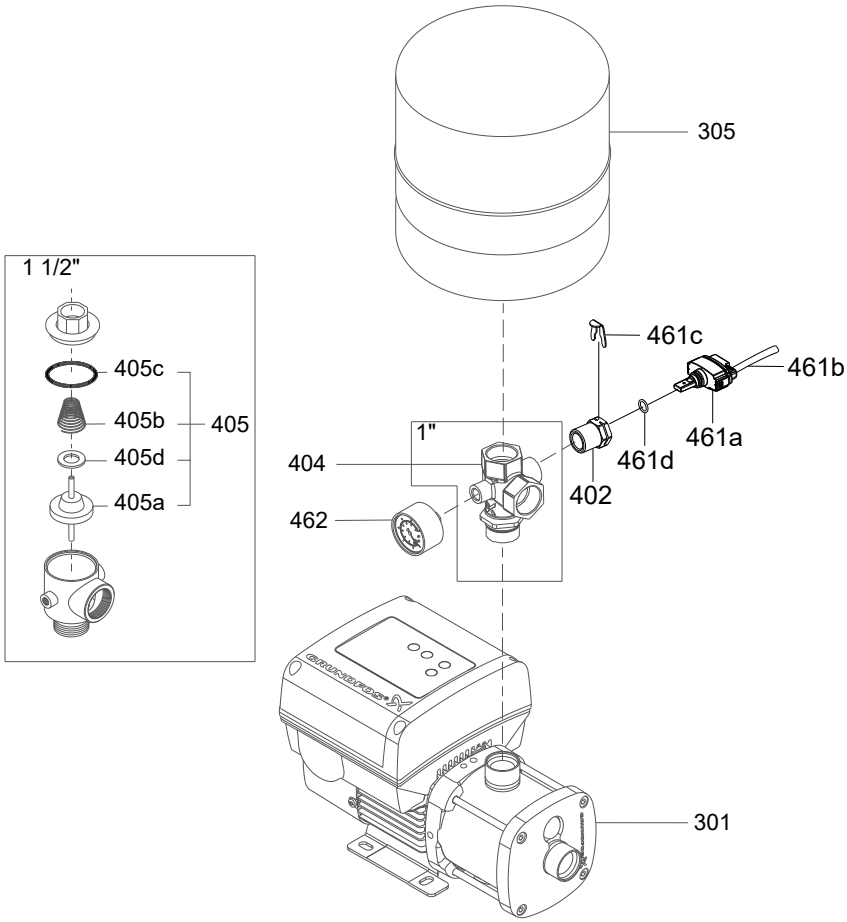

TM064097

CM Booster PT, PS

50/60 Hz

Hose, kits

Pos.	Kit No.	98906918	98906919
	Model	CMB PT	CMB PT
	Tanks size	24 liter	60 liter
309	Rubber hose with fittings	1	-
309	Rubber hose with fittings	-	1
406	Gasket	1	1

Manometer

Pos.	Kit No.	98906913
	Model	CMB PT / CMB PS
462	Manometer	1

Non-return valve CMB PS & CMB PT vertical tank

Pos.	Kit No.	98906916	98906917
	Model	CMB PS/PT	CMB PS
	Valve size	1"	1 1/2"
405a	Gate	1	1
405b	Spring	1	1
405c	O-ring	1	1
406	Gasket	1	-
405d	Washer	-	1

Pressure switch kit

Pos.	Kit No.	98906906	98906907
	Model	CMB PS	CMB PT
407a	Pressure switch	1	1

Pressure tank

Pos.	Kit No.	98906910	98906911	98906912
	Model	CMB PT	CMB PT	CMB PT
305	24 liter GT-H tank	1	-	-
305	60 liter GT-H tank	-	1	-
305	18 liter GT-H tank	-	-	1
406	Gasket	2	2	2

CMB PM1, CMB PM2

See section Pressure manager for PM parts.

CM Booster

CMB PS

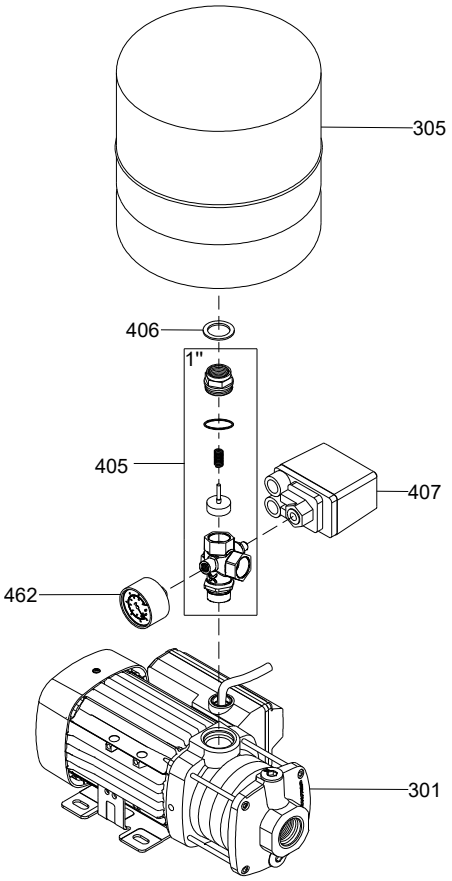

TM063604

CMB PT (vertical tank)

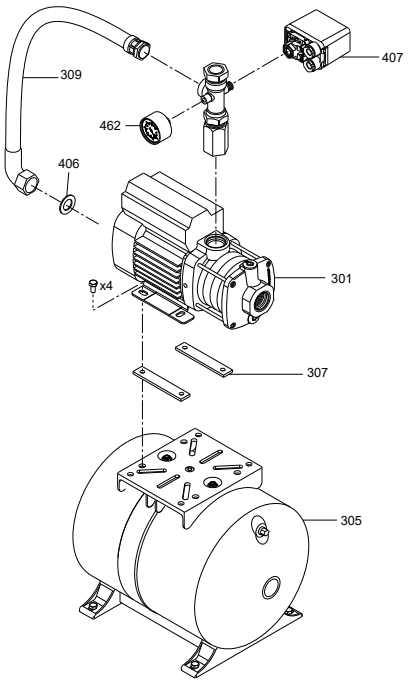

TM064098

CMB PT (horizontal tank)

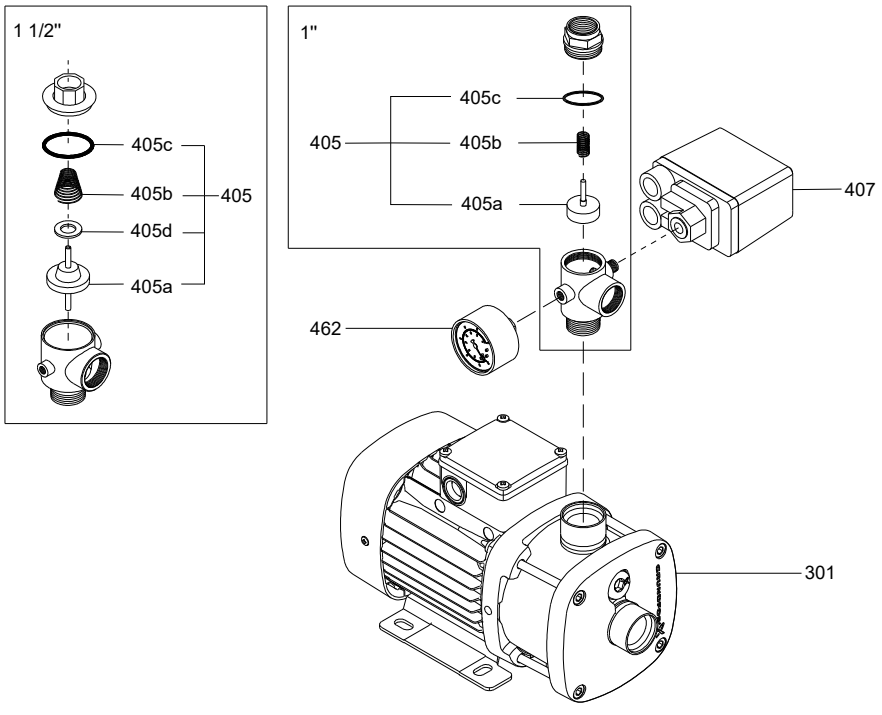

Argentina
Bombas GRUNDFOS de Argentina S.A.
Ruta Panamericana km. 37.500industin
1619 - Garín Pcia. de B.A.
Tel.: +54-3327 414 444
Fax: +54-3327 45 3190

Australia
GRUNDFOS Pumps Pty. Ltd.
P.O. Box 2040
Regency Park
South Australia 5942
Tel.: +61-8-8461-4611
Fax: +61-8-8340-0155

Austria
GRUNDFOS Pumpen Vertrieb Ges.m.b.H.
Grundfosstraße 2
A-5082 Grödig/Salzburg
Tel.: +43-6246-883-0
Fax: +43-6246-883-30

Belgium
N.V. GRUNDFOS Bellux S.A.
Boomsesteenweg 81-83
B-2630 Aartselaar
Tel.: +32-3-870 7300
Fax: +32-3-870 7301

Bosnia and Herzegovina
GRUNDFOS Sarajevo
Zmaja od Bosne 7-7A
BiH-71000 Sarajevo
Tel.: +387 33 592 480
Fax: +387 33 590 465
www.ba.grundfos.com
E-mail: grundfos@bih.net.ba

Brazil
BOMBAS GRUNDFOS DO BRASIL
Av. Humberto de Alencar Castelo Branco, 630
CEP 09850 - 300
São Bernardo do Campo - SP
Tel.: +55-11 4393 5533
Fax: +55-11 4343 5015

Bulgaria
Grundfos Bulgaria EOOD
Slatina District
Iztochna Tangenta street no. 100
BG - 1592 Sofia
Tel.: +359 2 49 22 200
Fax: +359 2 49 22 201
E-mail: bulgaria@grundfos.bg

Canada
GRUNDFOS Canada inc.
2941 Brighton Road
Oakville, Ontario
L6H 6C9
Tel.: +1-905 829 9533
Fax: +1-905 829 9512

China
GRUNDFOS Pumps (Shanghai) Co. Ltd.
10F The Hub, No. 33 Suhong Road
Minhang District
Shanghai 201106 PRC
Tel.: +86 21 612 252 22
Fax: +86 21 612 253 33

Colombia
GRUNDFOS Colombia S.A.S.
Km 1.5 vía Siberia-Cota Conj. Potrero Chico,
Parque Empresarial Arcos de Cota Bod. 1A.
Cota, Cundinamarca
Tel.: +57(1)-2913444
Fax: +57(1)-8764586

Croatia
GRUNDFOS CROATIA d.o.o.
Buzinski prilaz 38, Buzin
HR-10010 Zagreb
Tel.: +385 1 6595 400
Fax: +385 1 6595 499
www.hr.grundfos.com

Czech Republic
GRUNDFOS Sales Czechia and Slovakia s.r.o.
Čajkovského 21
779 00 Olomouc
Tel.: +420-585-716 111

Denmark
GRUNDFOS DK A/S
Martin Bachs Vej 3
DK-8850 Bjerringbro
Tel.: +45-87 50 50 50
www.grundfos.com/DK

Estonia
SIA Grundfos Pumps Baltic Eesti filiaal
Priisle tee 10
13914 Tallinn
Tel.: + 372 606 1690
E-mail: estonia@sales.grundfos.com

Finland
OY GRUNDFOS Pumput AB
Trukkikuja 1
FI-01360 Vantaa
Tel.: +358-(0) 207 889 500

France
Pompes GRUNDFOS Distribution S.A.
Parc d'Activités de Chesnes
57, rue de Malacombe
F-38290 St. Quentin Fallavier (Lyon)
Tel.: +33-4 74 82 15 15
Fax: +33-4 74 94 10 51

Germany
GRUNDFOS GMBH
Schlüterstr. 33
40699 Erkrath
Tel.: +49-(0) 211 929 69-0
Fax: +49-(0) 211 929 69-3799
E-mail: infoservice@grundfos.de
Service in Deutschland:
kundendienst@grundfos.de

Greece
GRUNDFOS Hellas A.E.B.E.
20th km. Athinon-Markopoulou Av.
P.O. Box 71
GR-19002 Peania
Tel.: +0030-210-66 83 400
Fax: +0030-210-66 46 273

Hong Kong
GRUNDFOS Pumps (Hong Kong) Ltd.
Unit 1, Ground floor, Siu Wai industrial Centre
29-33 Wing Hong Street & 68 King Lam Street, Cheung Sha Wan
Kowloon
Tel.: +852-27861706 / 27861741
Fax: +852-27858664

Hungary
GRUNDFOS South East Europe Kft.
Tópark u. 8
H-2045 Törökbálint
Tel.: +36-23 511 110
Fax: +36-23 511 111

India
GRUNDFOS Pumps India Private Limited
118 Old Mahabalipuram Road
Thoraipakkam
Chennai 600 097
Tel.: +91-44 2496 6800

Indonesia
PT GRUNDFOS Pompa
Graha intirub Lt. 2 & 3
Jln. Cililitan Besar No.454. Makasar, Jakarta Timur
ID-Jakarta 13650
Tel.: +62 21-469-51900
Fax: +62 21-460 6910 / 460 6901

Ireland
GRUNDFOS (Ireland) Ltd.
Unit A, Merrywell Business Park
Ballymount Road Lower
Dublin 12
Tel.: +353-1-4089 800
Fax: +353-1-4089 830

Italy
GRUNDFOS Pompe Italia S.r.l.
Via Gran Sasso 4
I-20060 Truccazzano (Milano)
Tel.: +39-02-95838112
Fax: +39-02-95309290 / 95838461

Japan
GRUNDFOS Pumps K.K.
1-2-3, Shin-Miyakoda, Kita-ku
Hamamatsu
431-2103 Japan
Tel.: +81 53 428 4760
Fax: +81 53 428 5005

Kazakhstan
Grundfos Kazakhstan LLP
7' Kyz-Zhibek Str., Kok-Tobe micr.
KZ-050020 Almaty Kazakhstan
Tel.: +7 (727) 227-98-55/56

Korea
GRUNDFOS Pumps Korea Ltd.
6th Floor, Aju Building 679-5
Yeoksam-dong, Kangnam-ku, 135-916
Seoul, Korea
Tel.: +82-2-5317 600
Fax: +82-2-5633 725

Latvia
GRUNDFOS Pumps Baltic SIA
Gunāra Astras iela 8B
LV-1082, Rīga,
Tel.: + 371 671 49640
E-mail: latvia@sales.grundfos.com

Lithuania
SIA „GRUNDFOS PUMPS BALTIC" Lietuvos filialas
Smolensko g. 6
LT-03201 Vilnius
Tel.: + 370 5 239 5430
E-mail: lithuania@sales.grundfos.com

Malaysia
GRUNDFOS Pumps Sdn. Bhd.
7 Jalan Peguam U1/25
Glenmarie industrial Park
40150 Shah Alam, Selangor
Tel.: +60-3-5569 2922
Fax: +60-3-5569 2866

Mexico
Bombas GRUNDFOS de México S.A. de C.V.
Boulevard TLC No. 15
Parque industrial Stiva Aeropuerto
Apodaca, N.L. 66600
Tel.: +52-81-8144 4000
Fax: +52-81-8144 4010

Netherlands
GRUNDFOS Netherlands
Veluwezoom 35
1326 AE Almere
Postbus 22015
1302 CA ALMERE
Tel.: +31-88-478 6336
Fax: +31-88-478 6332
E-mail: info_gnl@grundfos.com

New Zealand
GRUNDFOS Pumps NZ Ltd.
17 Beatrice Tinsley Crescent
North Harbour Industrial Estate
Albany, Auckland
Tel.: +64-9-415 3240
Fax: +64-9-415 3250

Norway
GRUNDFOS Pumper A/S
Strømsveien 344
Postboks 235, Leirdal
N-1011 Oslo
Tel.: +47-22 90 47 00
Fax: +47-22 32 21 50

Poland
GRUNDFOS Pompy Sp. z o.o.
ul. Klonowa 23
Baranowo k. Poznania
PL-62-081 Przeźmierowo
Tel.: (+48-61) 650 13 00
Fax: (+48-61) 650 13 50

Portugal
Bombas GRUNDFOS Portugal, S.A.
Rua Calvet de Magalhães, 241
Apartado 1079
P-2770-153 Paço de Arcos
Tel.: +351-21-440 76 00
Fax: +351-21-440 76 90

Romania
GRUNDFOS Pompe România SRL
S-PARK BUSINESS CENTER, Clădirea A2, etaj 2
Str. Tipografilor, Nr. 11-15, Sector 1, Cod 013714
Bucuresti, Romania
Tel.: 004 021 2004 100
E-mail: romania@grundfos.ro

Serbia
Grundfos Srbija d.o.o.
Omladinskih brigada 90b
11070 Novi Beograd
Tel.: +381 11 2258 740
Fax: +381 11 2281 769
www.rs.grundfos.com

Singapore
GRUNDFOS (Singapore) Pte. Ltd.
25 Jalan Tukang
Singapore 619264
Tel.: +65-6681 9688
Faxax: +65-6681 9689

Slovakia
GRUNDFOS s.r.o.
Prievozská 4D 821 09 BRATISLAVA
Tel.: +421 2 5020 1426
sk.grundfos.com

Slovenia
GRUNDFOS LJUBLJANA, d.o.o.
Leskoškova 9e, 1122 Ljubljana
Tel.: +386 (0) 1 568 06 10
Fax: +386 (0)1 568 06 19
E-mail: tehnika-si@grundfos.com

South Africa
GRUNDFOS (PTY) LTD
16 Lascelles Drive, Meadowbrook Estate
1609 Germiston, Johannesburg
Tel.: (+27) 10 248 6000
Fax: (+27) 10 248 6002
E-mail: lgradidge@grundfos.com

Spain
Bombas GRUNDFOS España S.A.
Camino de la Fuentecilla, s/n
E-28110 Algete (Madrid)
Tel.: +34-91-848 8800
Fax: +34-91-628 0465

Sweden
GRUNDFOS AB
Box 333 (Lunnagårdsgatan 6)
431 24 Mölndal
Tel.: +46 31 332 23 000
Fax: +46 31 331 94 60

Switzerland
GRUNDFOS Pumpen AG
Bruggacherstrasse 10
CH-8117 Fällanden/ZH
Tel.: +41-44-806 8111
Fax: +41-44-806 8115

Taiwan
GRUNDFOS Pumps (Taiwan) Ltd.
7 Floor, 219 Min-Chuan Road
Taichung, Taiwan, R.O.C.
Tel.: +886-4-2305 0868
Fax: +886-4-2305 0878

Thailand
GRUNDFOS (Thailand) Ltd.
92 Chaloem Phrakiat Rama 9 Road
Dokmai, Pravej, Bangkok 10250
Tel.: +66-2-725 8999
Fax: +66-2-725 8998

Turkey
GRUNDFOS POMPA San. ve Tic. Ltd. Sti.
Gebze Organize Sanayi Bölgesi
Ihsan dede Caddesi
2. yol 200. Sokak No. 204
41490 Gebze/ Kocaeli
Tel.: +90 - 262-679 7979
Fax: +90 - 262-679 7905
E-mail: satis@grundfos.com

Ukraine
ТОВ "ГРУНДФОС УКРАЇНА"
Бізнес Центр Європа
Столичне шосе, 103
м. Київ, 03131, Україна
Tel.: (+38 044) 237 04 00
Fax: (+38 044) 237 04 01
E-mail: ukraine@grundfos.com

United Arab Emirates
GRUNDFOS Gulf Distribution
P.O. Box 16768
Jebel Ali Free Zone, Dubai
Tel.: +971 4 8815 166
Fax: +971 4 8815 136

United Kingdom
GRUNDFOS Pumps Ltd.
Grovebury Road
Leighton Buzzard/Beds. LU7 4TL
Tel.: +44-1525-850000
Fax: +44-1525-850011

U.S.A.
Global Headquarters for WU
856 Koomey Road
Brookshire, Texas 77423 USA
Phone: +1-630-236-5500

Uzbekistan
Grundfos Tashkent, Uzbekistan
The Representative Office of Grundfos Kazakhstan in Uzbekistan
38a, Oybek street, Tashkent
Tel.: (+998) 71 150 3290 / 71 150 3291
Fax: (+998) 71 150 3292

© Grundfos Holding A/S 03.2026

93609273

ECM: 1448570	04.2026

Grundfos Holding A/S
Poul Due Jensens Vej 7
DK-8850 Bjerringbro
Tel: +45 87 50 14 00
www.grundfos.com