DP/EF/SL1/SLV and AUTOADAPT

50 Hz DIN

Service instructions

GRUNDFOS

DP/EF/SL1/SLV and AUTOADAPT

English (GB)

Service instructions 4

Original service instructions

Table of contents

1. General information 4
1.1 General information 4
1.2 Hazard statements 4
1.3 Notes 4

2. Product introduction 5
2.1 Product description 5
2.2 Product description AUTOADAPT 6
2.3 Application 7
2.4 Intended use 7

3. Identification 8
3.1 Nameplate 8
3.2 Type key SL1.50, SLV.65 8
3.3 Type key DP10, EF30 9
3.4 Type key SL1.50, SLV.65 AUTOADAPT 9
3.5 Type key DP10, EF30 AUTOADAPT 10

4. Receiving the product 10
4.1 Transporting the product 10
4.2 Handling the product 10
4.3 Lifting the product 10

5. Electrical connection 11
5.1 Wiring diagram 11

6. Starting up the product 12

7. Maintenance and service 13
7.1 Contaminated pumps 13
7.2 Maintenance schedule 14
7.3 Oil check and change 14
7.4 Adjusting the impeller clearance 14
7.5 Cleaning the pump housing 15
7.6 Checking or replacing the shaft seal 15
7.7 Service kits 17
7.8 Service kits AUTOADAPT 18

8. Design 19
8.1 Material specification, DP and EF, standard pumps 19
8.2 Material specification, DP 10 and EF, AUTOADAPT pumps 27
8.3 Material specification, SL1 and SLV, standard pumps 35
8.4 Material specification, SL1 and SLV, AUTOADAPT pumps 40

9. Disassembling the product 46
9.1 Warnings and notes disassembly/assembly 46
9.2 Draining the motor oil 46
9.3 Removing the pump housing 46
9.4 Removing the impeller 47
9.5 Removing the shaft seal 47
9.6 Removing the bearings 47

10. Assembling the product 48
10.1 Warnings and notes disassembly/assembly 48
10.2 Fitting the bearings 48
10.3 Fitting the shaft seal 48
10.4 Fitting the impeller 49
10.5 Fitting the pump housing 49
10.6 Adjusting the impeller clearance 50

11. Disposing of the product 50

1. General information

1.1 General information

Read this document before you install the product. Installation and operation must comply with local regulations and accepted codes of good practice.

This appliance shall not be used by children.

Children shall not play with the appliance.

Cleaning and user maintenance shall not be carried out by children.

Appliances can be used by persons with reduced physical, sensory, or mental capabilities, as well as persons with a lack of experience and knowledge. This requires that they are given supervision or instruction concerning the use of the appliance in a safe way and that they understand the hazards involved.

1.2 Hazard statements

The symbols and hazard statements below may appear in Grundfos installation and operating instructions, safety instructions and service instructions.

DANGER
Indicates a hazardous situation which, if not avoided, will result in death or serious personal injury.

WARNING
Indicates a hazardous situation which, if not avoided, could result in death or serious personal injury.

CAUTION
Indicates a hazardous situation which, if not avoided, could result in minor or moderate personal injury.

The hazard statements are structured in the following way:

SIGNAL WORD
Description of the hazard
Consequence of ignoring the warning
- Action to avoid the hazard.

1.3 Notes

The symbols and notes below may appear in Grundfos installation and operating instructions, safety instructions and service instructions.

Observe these instructions for explosion-proof products.

A blue or grey circle with a white graphical symbol indicates that an action must be taken.

A red or grey circle with a diagonal bar, possibly with a black graphical symbol, indicates that an action must not be taken or must be stopped.

If these instructions are not observed, it may result in malfunction or damage to the equipment.

Tips and advice that make the work easier.

2. Product introduction

2.1 Product description

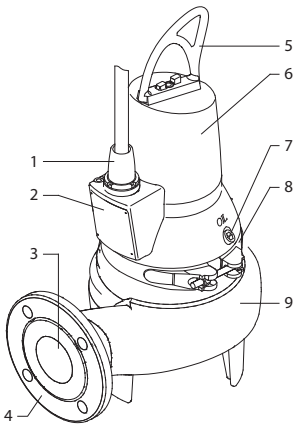

TM065918

SL1.50.65 and SLV.65.65 pumps

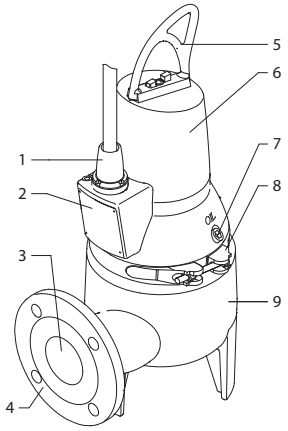

TM065937

SLV.65.65 pump

Pos.	Description
1	Cable plug
2	Nameplate
3	Outlet port
4	Outlet flange DN 65, PN 10
5	Lifting bracket
6	Stator housing
7	Oil screw
8	Clamp
9	Pump housing

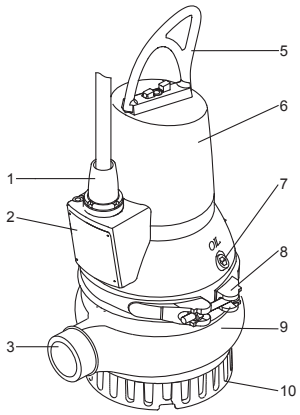

TM065981

DP10.50 pump

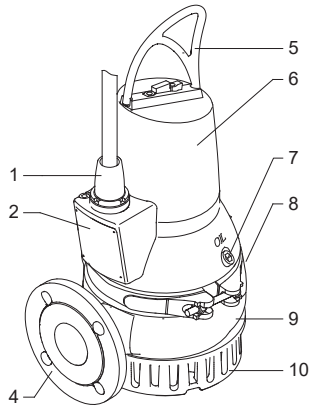

TM065885

DP10.65 pump

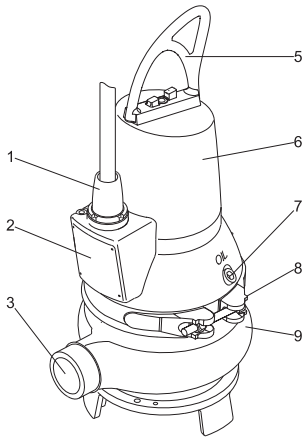

TM065906

EF30.50 pump

Pos.	Description
1	Cable plug
2	Nameplate
3	Outlet
4	Outlet flange DN 65, PN 10
5	Lifting bracket
6	Stator housing
7	Oil screw
8	Clamp
9	Pump housing
10	Inlet strainer (DP pumps only)

2.2 Product description AUTOADAPT

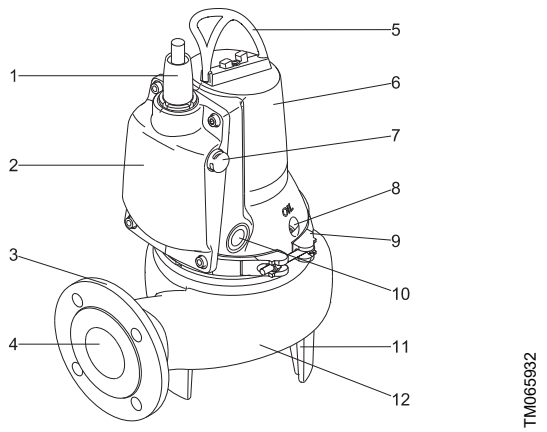

SL1.50.65 AUTOADAPT pump

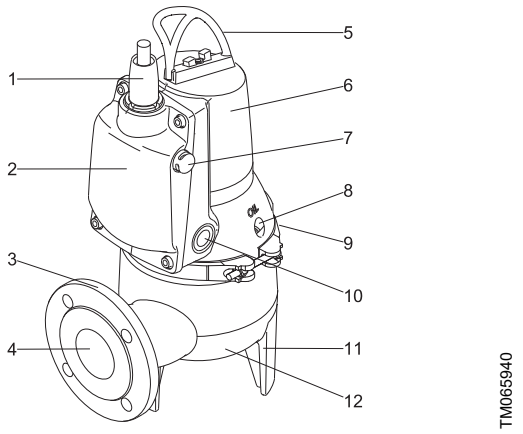

SLV.65.65 AUTOADAPT pump

Pos.	Description
1	Cable plug
2	Electronic unit
3	Outlet flange DN 65, PN 10
4	Outlet port
5	Lifting bracket
6	Stator housing
7	Level sensor
8	Oil screw
9	Clamp
10	Dry-running sensors
11	Pump foot
12	Pump housing

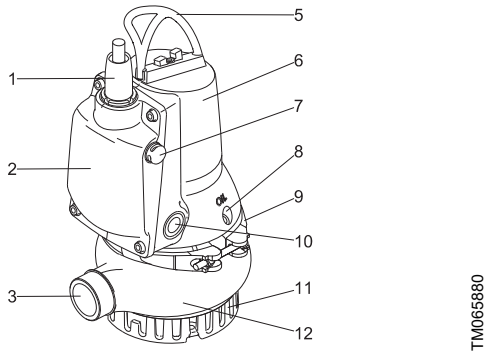

DP 10.50 AUTOADAPT pump

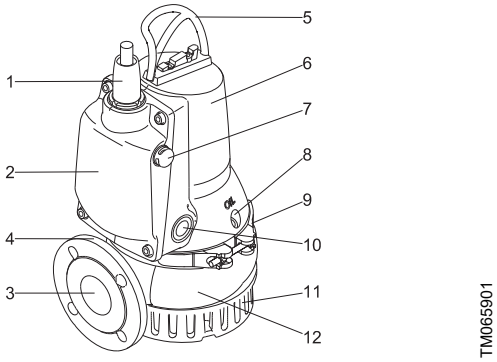

DP 10.65 AUTOADAPT pump

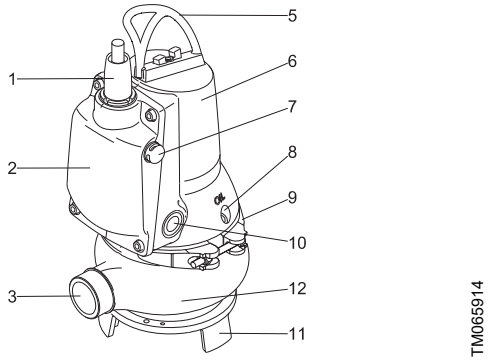

EF 30.50 AUTOADAPT pump

Pos.	Description
1	Cable plug
2	Electronic unit
3	Outlet port
4	Outlet flange DN 65, PN 10
5	Lifting bracket
6	Stator housing
7	Level sensor
8	Oil screw
9	Clamp
10	Dry-running sensors
11	Pump foot
12	Pump housing

2.3 Application

SL1.50.65

The product is designed for pumping the following liquids:

- large quantities of drainage and surface water
- domestic wastewater with discharge from toilets
- wastewater from commercial buildings without discharge from toilets
- industrial wastewater containing sludge
- industrial process water.

SLV.65.65

The product is designed for pumping the following liquids:

- surface water with abrasive particles
- municipal sewage
- sewage from commercial buildings
- industrial wastewater containing sludge or fibre.

DP10

The product is designed for pumping the following liquids:

- drainage and surface water
- groundwater
- industrial process water without solids or fibres.

EF30

The product is designed for pumping the following liquids:

- drainage and surface water with small impurities
- wastewater with fibres, such as from laundries
- wastewater without discharge from toilets
- effluent from commercial buildings without discharge from toilets.

2.4 Intended use

The compact design makes the pumps suitable for both temporary and permanent installation.

The pumps can be installed on an auto-coupling system or stand freely on the bottom of a pit.

The pumps are portable and designed for pumping domestic and industrial sewage and wastewater.

3. Identification

3.1 Nameplate

Fix the extra nameplate supplied with the pump at the installation site or keep it in the cover of this manual.

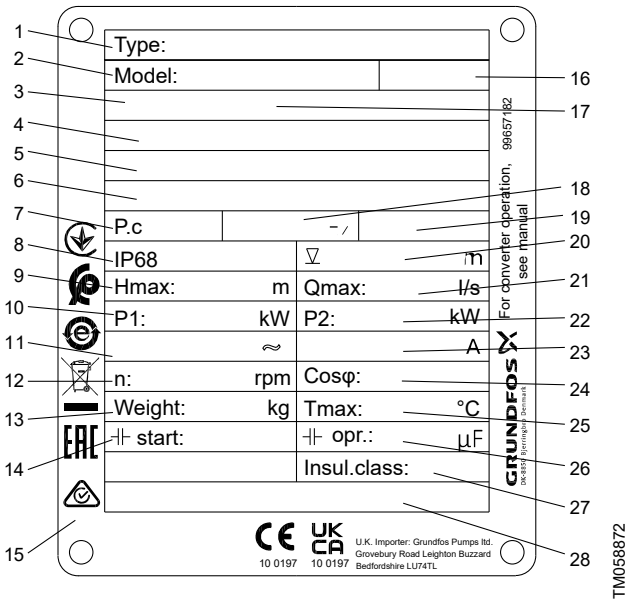

Nameplate

Pos.	Description
1	Type designation
2	Product number
3	Approval
4	ATEX certificate number
5	UKEX certification number
6	IEC Ex certificate number
7	Production code, year and week
8	Enclosure class according to IEC 60529
9	Maximum head [m]
10	Rated input power [kW]
11	Rated voltage
12	Speed [rpm]
13	Net weight [kg]
14	Start capacitor [µF]
15	Room for approval and information logos
16	Safety instructions, publication number
17	Ex description
18	Frequency [Hz]
19	AUTOADAPT Y/N
20	Maximum installation depth [m]
21	Maximum flow rate [l/s]
22	Rated power output [kW]
23	Rated current [A]
24	Cos φ, 1/1 load
25	Maximum liquid temperature [°C]
26	Run capacitor [µF]
27	Insulation class
28	Production site and country

3.2 Type key SL1.50, SLV.65

Example: SL1.50.65.11.2.1.502

Code	Description	Explanation
SL	Grundfos sewage and wastewater pumps	Pump type
1	Single-channel impeller	Impeller type
V	Free-flow impeller (SuperVortex)	
50	Maximum solids size 50 = 50 mm	Pump passage
65	Nominal diameter of the pump outlet port 65 = 65 mm	Pump outlet
11	Output power P2 11 = 1.1 kW	Power [kW]
[ ]	Standard	Equipment
[ ]	Standard version	Pump version
Ex	Explosion-proof pump	
2	2-pole	Number of poles
1	Single-phase motor	Number of phases
[ ]	Three-phase motor	
5	50 Hz	Frequency [Hz] 1)
02	230 V, DOL	Voltage and starting method
0B	400-415 V, DOL	
0C	230-240 V, DOL	
[ ]	1st generation	Generation 2)
A	2nd generation	
B	3rd generation	
[ ]	Standard	Pump material
Z	Custom-built products	Customisation

1) Maximum frequency in case of frequency converter operation.

2) The pumps in the individual generations differ in design but are similar in terms of power rating.

3.3 Type key DP10, EF30

Example: DP10.50.15.2.1.502

Code	Description	Explanation
DP	Grundfos drainage pump	Pump type
EF	Grundfos effluent pump	
10	Maximum solids size 10 = 10 mm	Pump passage
50	Nominal outlet diameter 50 = 50 mm	Pump outlet
15	Output power P2 15 = 1.5 kW	Power [kW]
[ ]	Standard	Equipment
[ ]	Standard version	Pump version
Ex	Explosion-proof pump	
2	2-pole	Number of poles
1	Single-phase motor	Number of phases
[ ]	Three-phase motor	
5	50 Hz	Frequency [Hz] 1)
02	230 V, DOL	Voltage and starting method
0B	400-415 V, DOL	
0C	230-240 V, DOL	
[ ]	1st generation	Generation 2)
A	2nd generation	
B	3rd generation	
[ ]	Standard	Pump material
Z	Custom-built products	Customisation

1) Maximum frequency in case of frequency converter operation.

2) The pumps in the individual generations differ in design but are similar in terms of power rating.

3.4 Type key SL1.50, SLV.65 AUTOADAPT

Example: SL1.50.65.11.E.2.1.502

Code	Description	Explanation
SL	Grundfos sewage/wastewater pump	Pump type
1	Single-channel impeller	Impeller type
V	Free-flow impeller (SuperVortex)	
50	Maximum solids size 50 = 50 mm	Pump passage
65	Nominal diameter of the pump outlet port 65 = 65 mm	Pump outlet
11	Output power P2 11 = 1.1 kW	Power [kW]
E	AUTOADAPT version	Equipment
[ ]	Standard version	Pump version
Ex	Explosion-proof pump	
2	2-pole	Number of poles
[ ]	Single-phase motor	Number of phases
3	Three-phase motor	
5	50 Hz	Frequency [Hz]
02	230 V, DOL	Voltage code and starting method
0B	400-415 V, DOL	
[ ]	1st generation	Generation 1)
A	2nd generation	
B	3rd generation	
[ ]	Standard	Pump material
Z	Custom-built products	Customisation

1) The pumps in the individual generations differ in design but are similar in terms of power rating.

3.5 Type key DP10, EF30 AUTOADAPT

Example: DP.10.50.15.E.Ex.2.1.5.02

Code	Description	Explanation
DP	Grundfos drainage pump	Pump type
EF	Grundfos effluent pump	
10	Maximum solids size 10 = 10 mm	Pump passage
50	Nominal diameter of the pump outlet port 50 = 50 mm	Pump outlet
15	Output power P2 15 = 1.5 kW	Power [kW]
E	AUTOADAPT version	Equipment
[ ]	Standard version	Pump version
Ex	Explosion-proof pump	
2	2-pole	Number of poles
1	Single-phase motor	Number of phases
[ ]	Three-phase motor	
5	50 Hz	Frequency [Hz]
02	230 V, DOL	Voltage code and starting method
0B	400-415 V, DOL	
[ ]	1st generation	Generation [1)]
A	2nd generation	
B	3rd generation	
[ ]	Standard	Pump material
Z	Custom-built products	Customisation

[1)] The pumps in the individual generations differ in design but are similar in terms of power rating.

4. Receiving the product

The pump may be transported and stored in a vertical or horizontal position. Make sure that it cannot roll or fall over.

4.1 Transporting the product

The pump may be transported in a vertical or horizontal position.

CAUTION
Crushing hazard
Minor or moderate personal injury
- Make sure the pump cannot roll or fall over.

4.2 Handling the product

All lifting equipment must be rated for the purpose and checked for damage before lifting the pump. The lifting equipment rating must not be exceeded. The pump weight is stated on the nameplate.

WARNING
Crushing hazard
Death or serious personal injury
- Do not stack pump packages or pallets on top of each other when lifting or moving them.
- Always lift the pump by its lifting bracket or by a forklift truck if the pump is fixed on a pallet. Never lift the pump by the power cable, hose, or pipe.

CAUTION
Sharp element
Minor or moderate personal injury
- Wear protective gloves when opening the pump package.

Keep the cable end protectors in storage for later use.

4.3 Lifting the product

WARNING
Crushing of hands
Death or serious personal injury
- When lifting the pump, make sure your hand cannot be caught between the lifting bracket and the hook.

CAUTION
Crushing hazard
Minor or moderate personal injury
- Make sure that the hook is fixed properly to the lifting bracket.
- Always lift the pump by its lifting bracket or by a forklift truck if the pump is fixed on a pallet.
- Never lift the pump by the power cable, hose, or pipe.
- Make sure that the lifting bracket is tightened before lifting the pump.

When lifting the pump, use the right lifting point to keep the pump balanced.

Place the lifting chain hook in point A for auto-coupling installations and in point B for other installations.

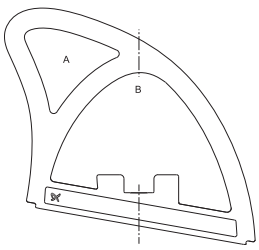

TM060066

Lifting points

Carelessness during lifting or transport may cause personal injury or damage to the pump.

5. Electrical connection

Make sure that the electrical connection complies with the local regulations.

DANGER
Electric shock
Death or serious personal injury

- Connect the pump to an external main switch which ensures all-pole disconnection with a contact separation according to EN 60204-1.
- It must be possible to lock the main switch in position 0. Type and requirements as specified in EN 60204-1.

Connect the pumps to a control unit with a motor protection relay with IEC trip class 10 or 15.

Pumps to be installed in potentially explosive locations must be connected to a control unit with a motor protection relay with IEC trip class 10.

The permanent installation must be fitted with an earth-leakage circuit breaker.

Make sure there is at least 3 m free cable above the maximum liquid level.

Do not install Grundfos control units, pump controllers, Ex barriers, and the free end of the power cable in potentially explosive environments.

The classification of the installation site must be approved according to local rules.

On explosion-proof pumps, make sure that an external earth conductor is connected to the external earth terminal on the pump using a conductor with a secure cable clamp. Clean the surface of the external earth connection and fit the cable clamp.

The cross-section of the earth conductor must be at least 4 mm^2, such as type H07 V2-K (PVT 90°) yellow and green.

Make sure that the earth connection is protected against corrosion.

Make sure that all protective equipment is connected correctly.

Float switches used in potentially explosive environments must be approved for this application. They must be connected to the pump controller by an intrinsically safe barrier to ensure a safe circuit.

DANGER
Electric shock
Death or serious personal injury

- If the power cable is damaged, it must be replaced by the manufacturer, his service agent, or a similarly qualified person.

Set the motor-protective circuit breaker to the rated current of the pump. The rated current is stated on the nameplate.

Make sure that the pump is connected according to these installation and operating instructions.

The supply voltage and frequency are marked on the nameplate. For voltage tolerance, see section Technical data. Make sure that the motor is suitable for the power supply available at the installation site.

All pumps are supplied with 10 m cable and a free cable end.

DANGER
Electric shock
Death or serious personal injury

- Before the first startup of the pump, check the cable for visible defects to avoid short circuits.

A possible replacement of the power cable must be carried out by Grundfos or an authorised service workshop.

The pump must be connected to one of the following controller types:

- a control unit with a motor-protective circuit breaker, such as Grundfos CU 100
- Grundfos LC 231 or 241 pump controller.

See the wiring diagrams and the installation and operating instructions for the selected control unit or pump controller.

In potentially explosive environments, proceed as follows:

- Float switches made for an Ex environment and a safety barrier in combination with either LC 231 or 241.
- Air bells in combination with LC 231 or 241.

In case of single-phase pumps, an LC 241 or LC 242 level controller must be used to comply with household standards.

For further information about the function of the thermal switches, see section Thermal switches.

5.1 Wiring diagram

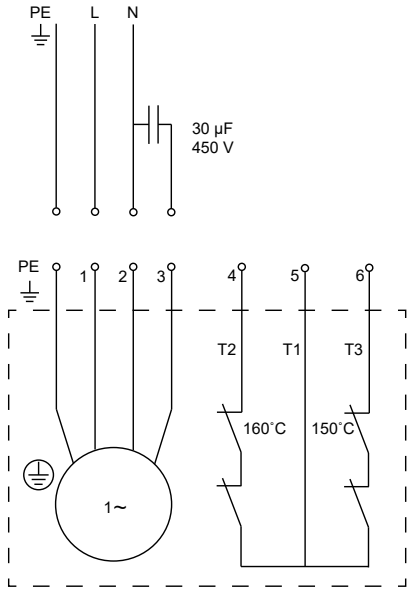

Wiring diagram for single-phase pumps

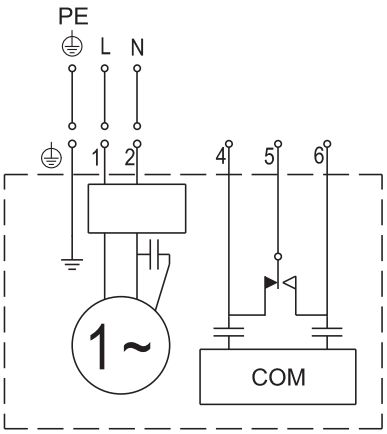

Wiring diagram for single-phase AUTOADAPT pumps

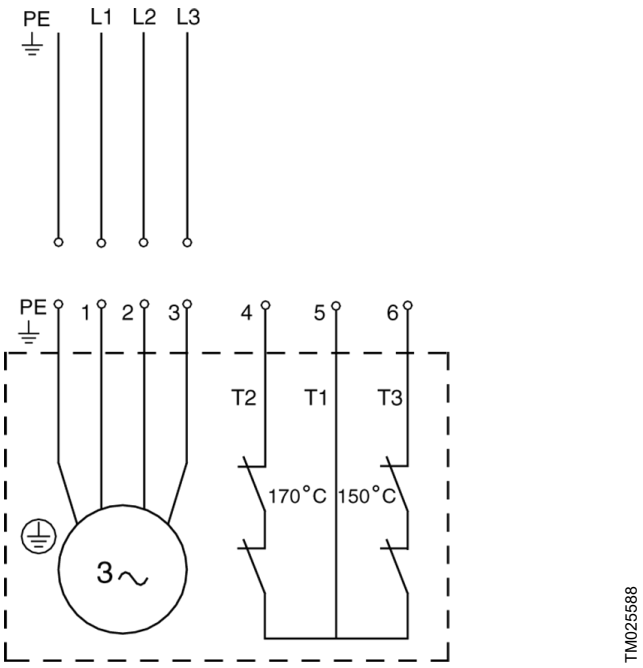

Wiring diagram for three-phase pumps

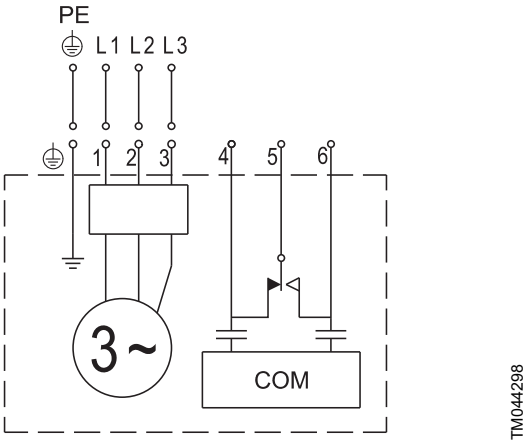

Wiring diagram for three-phase AUTOADAPT pumps

6. Starting up the product

The pump must not run dry.

If the atmosphere in the pit is potentially explosive, use only pumps with Ex approval.

In case of abnormal noise or vibrations, stop the pump immediately.

Do not restart the pump until the cause of the fault is identified and eliminated.

Proceed as follows:

1. Remove the fuses and check that the impeller can rotate freely. Turn the impeller by hand.
2. Check the condition of the oil in the oil chamber.
3. Check that the monitoring units, if used, are operating satisfactorily and appropriately.
4. Check the setting of the air bells, float switches, or electrodes.
5. Open the isolating valves, if fitted.
   Auto coupling: It is important to grease the gasket of the guide claw before lowering the pump into the pit.
6. Lower the pump into the liquid and insert the fuses.
   Auto coupling: Check that the pump is in the right position on the auto-coupling base unit.
7. Check if the system is filled with liquid and vented. The pump is self-venting.
8. Switch on the power supply to the pump. When the power is on, the pump starts and pumps down to the dry-running level. This process can be used to check that the pump functions correctly.

After one week of operation or after the replacement of the shaft seal, check the condition of the oil in the chamber.

7. Maintenance and service

Compliance with the standards EN 60079-17 and EN 60079-19 is a customer responsibility.

DANGER
Electric shock
Death or serious personal injury

- Before starting work on the pump, make sure that the fuses have been removed or the main switch has been switched off.
- Make sure that the power supply cannot be switched on unintentionally.

CAUTION
Crushing of hands
Death or serious personal injury

- Do not put your hands or any tool into the pump inlet or outlet port after the pump is connected to the power supply unless the pump is switched off by removing the fuses or switching off the main switch.
- Make sure that all rotating parts have stopped moving.

CAUTION
Biological hazard
Minor or moderate personal injury

- Make sure to seal the pump outlet properly when fitting the outlet pipe, otherwise water may spray out of the sealing.

CAUTION
Hot surface
Minor or moderate personal injury

- Do not touch the surface of the pump while the pump is running.

WARNING
Crushing of hands
Death or serious personal injury

- When lifting the pump, make sure your hand cannot be caught between the lifting bracket and the hook.

CAUTION
Sharp element
Minor or moderate personal injury

- Do not touch the sharp edges of the impeller without wearing protective gloves.
-

DANGER
Crushing hazard
Death or serious personal injury

- Make sure that the hook is fixed properly to the lifting bracket.
- Always lift the pump by its lifting bracket or by a forklift truck if the pump is fixed on a pallet.
- Never lift the pump by the power cable, hose, or pipe.
- Make sure that the lifting bracket is tightened before lifting the pump. Tighten if necessary.

DANGER
Electric shock
Death or serious personal injury

- Before installing the pump and starting it up for the first time, check the power cable for visible defects to avoid short circuits.
- If the power cable is damaged, it must be replaced by the manufacturer, his service agent, or a similarly qualified person.
- Make sure that the product is earthed properly.
- Switch off the power supply and lock the main switch in position 0.
- Switch off any external voltage connected to the product before working on it.

CAUTION
Biological hazard
Minor or moderate personal injury

- Flush the pump thoroughly with clean water and rinse the pump parts after dismantling. Pits for submersible sewage and wastewater pumps may contain sewage or wastewater with toxic and/or contagious substances.
- Wear appropriate personal protective equipment and clothing.
- Observe the local hygiene regulations in force.

CAUTION
Pressurised system
Minor or moderate personal injury

- The oil chamber may be under pressure. Do not remove the screws until the pressure is completely relieved.

Except for service on the pump parts, all other service work must be carried out by Grundfos or an authorised workshop and approved for servicing explosion-proof products.

Before carrying out maintenance and service, flush the pump thoroughly with clean water. Rinse the pump parts after dismantling.

If the pump is inactive for long periods, check its function.

Service videos can be found in Grundfos Product Center at www.grundfos.com.

If the pump is inactive for a longer period (more than 1-3 months), ensure the free rotation of the shaft by rotating it by hand. In case of any seizing, refer to the section Maintenance schedule.

A possible replacement of the power cable must be carried out by Grundfos or an authorised service workshop.

7.1 Contaminated pumps

CAUTION
Biological hazard
Minor or moderate personal injury

- Flush the pump thoroughly with clean water and rinse the pump parts after dismantling.

The product is classified as contaminated if it is used for contagious or toxic liquid.

Contact Grundfos with details about the pumped liquid before returning the product for service. Otherwise, Grundfos can refuse to accept the product.

Any application for service must include details about the pumped liquid.

Clean the product in the best possible way before returning it.

Costs of returning the product are to be paid by the customer.

7.2 Maintenance schedule

Inspect pumps running normal operation every 3000 operating hours or at least once a year. If the dry solids content of the pumped liquid is very high or sandy, check the pump at shorter intervals.

Check the following points:

- **Power consumption**
  See the nameplate.
- **Oil level and condition**
  When the pump is new or after the replacement of the shaft seal, check the oil level after one week of operation. Use Shell Ondina X420 oil or a similar type. Oil autoignition temperature must be above 180 °C.
- **Cable entry**

  Make sure that the cable entry is watertight and that the cables are not sharply bent or pinched.

- **Pump parts**
  Check the wear parts and replace the defective ones.
- **Ball bearings**
  Check the shaft for noisy or heavy operation by turning the shaft by hand. Replace defective ball bearings. A general overhaul of the pump is usually required in case of defective ball bearings or poor motor function. This work must be carried out by Grundfos or an authorised service workshop.
  The ball bearings are lubricated for a lifetime.

7.3 Oil check and change

Change the oil in the oil chamber every 3000 operating hours or at least once a year or if the shaft seal is replaced.

In case of the drained oil contains water, check and replace the shaft seal.

The table below indicates the oil quantity in the oil chamber:

Pump type	Quantity of oil in the oil chamber [l]
SL1, SLV, DP, and EF pumps up to 1.5 kW	0.17
DP pumps of 2.6 kW	0.42

Draining of oil

CAUTION
Pressurised system
Minor or moderate personal injury
- The oil chamber may be under pressure. Loosen the screws carefully and do not remove them until the pressure is completely relieved.

1. Loosen and remove both oil screws to allow all the oil to drain from the chamber.
2. Check the oil for water and impurities. If the shaft seal is removed, the oil indicates the condition of the shaft seal.

Dispose of used oil in accordance with local regulations.

Oil filling, pump in a horizontal position

1. Place the pump horizontally on the stator housing and make sure the outlet flange and the oil screws are pointing upwards.
2. Fill oil into the oil chamber through the upper hole until it starts running out of the lower hole. The oil level is now correct.
3. Fit both oil screws using the gaskets included in the O-ring service kit.

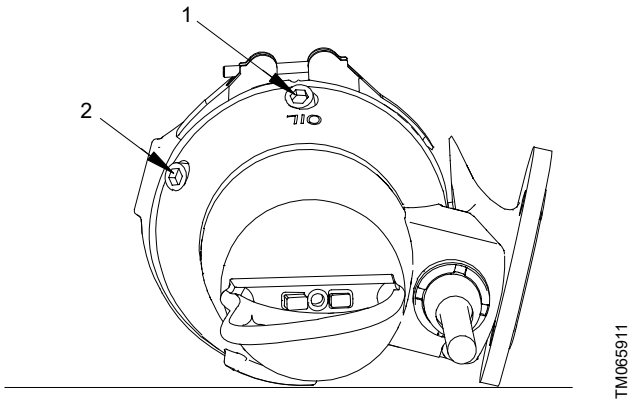

Oil filling holes

Pos.	Description
1	Oil filling
2	Oil level

Oil filling, pump in a vertical position

1. Place the pump on a plain, horizontal surface.
2. Fill oil into the oil chamber through one of the holes until it starts running out of the other hole.
3. Fit both oil screws using the gaskets included in the O-ring service kit.

7.4 Adjusting the impeller clearance

The SLV pumps (SuperVortex) with semi-open impellers do not need impeller adjustment.

SL1 pumps

For position numbers in brackets, see the Appendix.

Proceed as follows:

1. Loosen the locking screws (188b).
2. Loosen the adjusting screws (89) and push the wear plate (162) until it touches the impeller.
3. Tighten the adjusting screws so that the wear plate still touches the impeller. Then loosen all the adjusting screws for about half a turn.

   Make sure the impeller can rotate freely without touching the wear plate.

4. Tighten the locking screws.
5. Rotate the impeller by hand to check that it is not touching the wear plate.

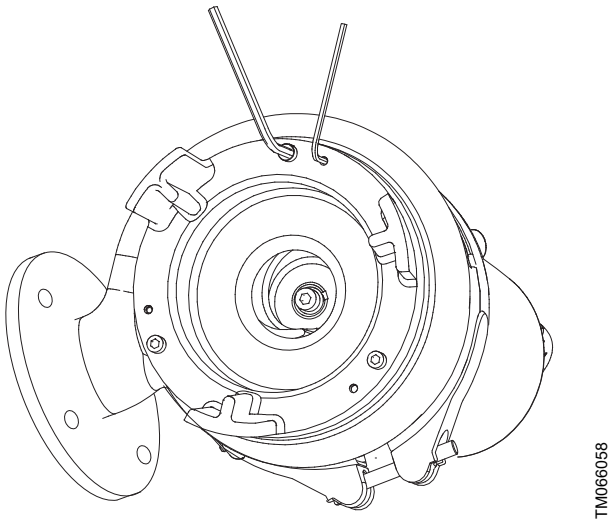

Pump viewed from the inlet side

7.5 Cleaning the pump housing

For position numbers in brackets, see the Appendix.

Proceed as follows:

Dismantling

1. Place the pump in a vertical position.
2. Loosen and remove the clamp (92) fastening the pump housing to the motor.
3. Lift the motor out of the pump housing (50). As the impeller is fastened to the shaft end, the impeller is removed together with the motor.
4. Clean the pump housing and the impeller.

Assembly

1. Place the motor with the impeller in the pump housing (50).
2. Fit and tighten the clamp.

7.6 Checking or replacing the shaft seal

Check the oil to make sure that the shaft seal is intact.

If the oil contains more than 20 % water, the shaft seal is defective and must be replaced. If the shaft seal is not replaced, the motor may be damaged.

If the oil is clean, it can be reused.

Proceed as follows:

1. Loosen and remove the clamp (92) fastening the pump housing to the motor.
2. Lift the motor out of the pump housing (50). As the impeller is fastened to the shaft end, the impeller is removed together with the motor.
3. Remove the screw (188a) from the shaft end.
4. Remove the impeller (49) from the shaft.

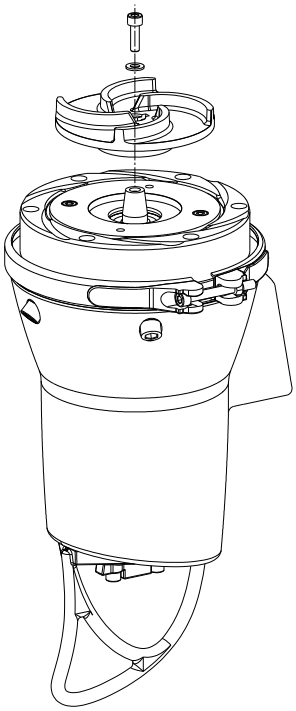

TM088912

Removing the impeller DP pumps

5. Drain the oil from the oil chamber. The shaft seal is a complete unit for all pumps.
6. Remove the screws (188a) securing the shaft seal (105).
7. Lift the shaft seal (105) out of the oil chamber using the lever principle using the two dismounting holes in the shaft seal carrier (58) and two screwdrivers.

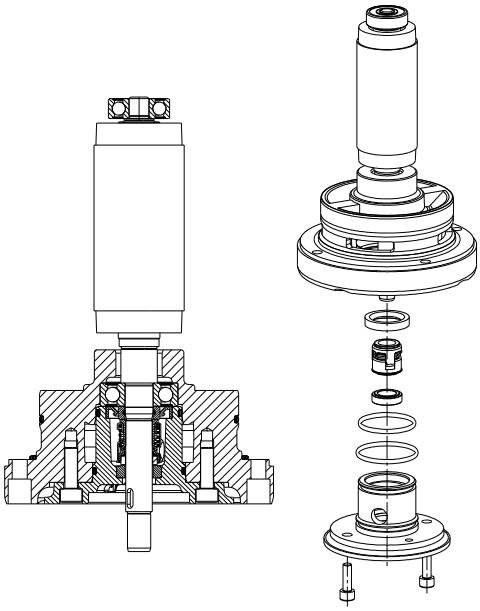

TM088910

Shaft seal

8. Check the condition of the bush (103) where the secondary seal of the shaft seal touches the bush. The bush must be intact. If the bush is worn and must be replaced, the pump must be checked by Grundfos or an authorised service workshop.

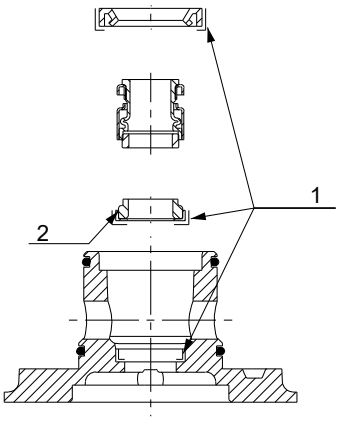

TM057246

Shaft seal assembly

If the bush is intact, continue as follows:

9. Check and clean the oil chamber.

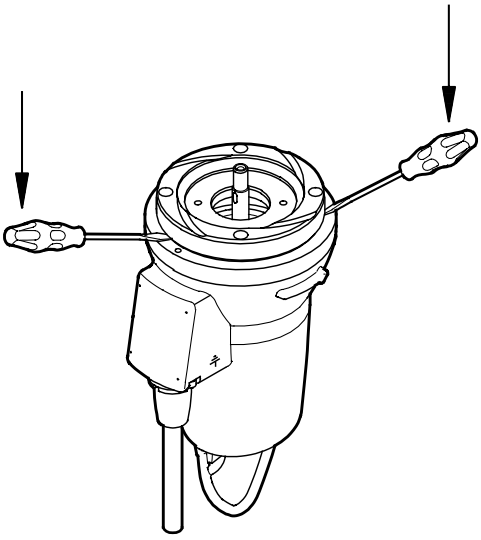

TM025988

Removing the oil chamber

10. Lubricate the faces in contact with the shaft seal with oil.

11. Insert the new shaft seal (105) using the plastic bush included in the kit.
12. Tighten the screws (188a) securing the shaft seal to 20Nm.
13. Fit the impeller. Make sure that the key (9a) is fitted correctly.
14. Fit and tighten the screw (188a) securing the impeller to 20 Nm.
15. Place the motor with the impeller in the pump housing (50).

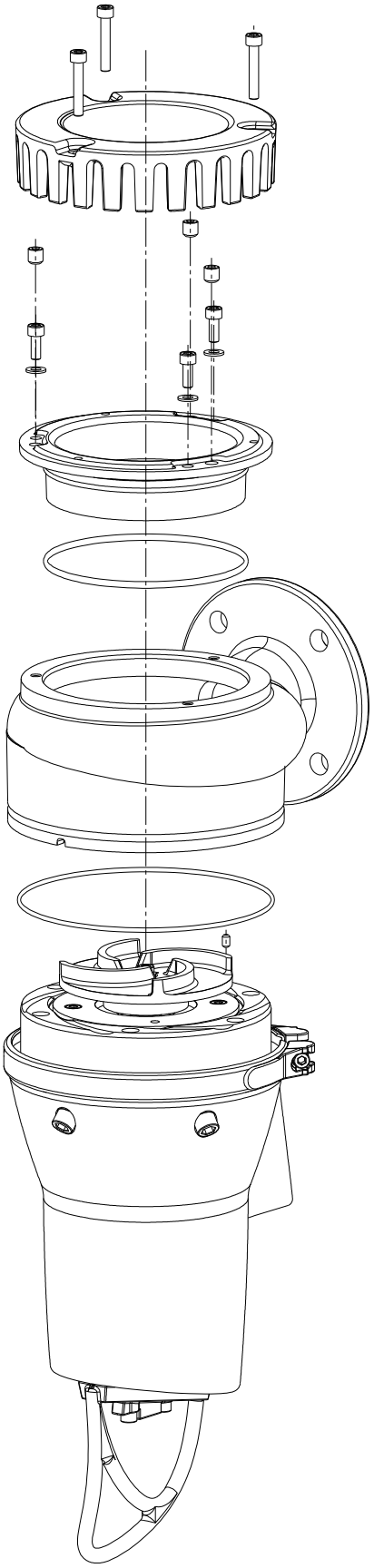

TM088911

16. Fit and tighten the clamp (92).
17. Fill the oil chamber with oil.

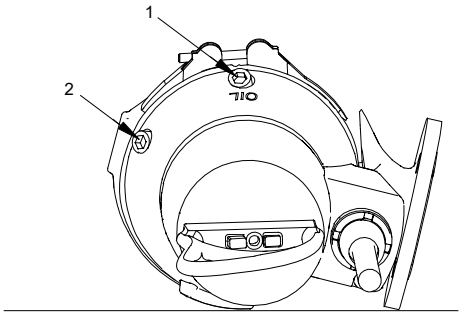

TM065911

Oil screws

For adjustment of the impeller clearance, see section Adjusting the impeller clearance.

7.7 Service kits

The following service kits are available for all pumps.

Service kit	Contents	Pump type	Material	Product number
Shaft seal kit	Shaft seal complete	All	BQQP	96106536
		All	BQQV	96645161
O-ring kit	O-rings and gaskets for oil screws	SL1 and SLV	NBR	96115107
		SL1 and SLV	FKM	96646049
		DP and EF 0.6 - 1.5 kW	NBR	96115107
			FKM	96646049
		DP and EF 2.6 kW	NBR	96115108
			FKM	96646060
Impeller	Impeller complete with adjusting screw, shaft screw, and key	SL1.50.65.09		96115096
		SL1.50.65.11		96115097
		SL1.50.65.15		96115098
		SLV.65.65.09		96115110
		SLV.65.65.11		96115099
		SLV.65.65.15		96115100
		EF30.50.06		96115101
		EF30.50.09		96115109
		EF30.50.11		96115102
		EF30.50.15		96115103
		DP10.50.09		96115104
		DP10.50.15		96115105
		DP10.65.26		96115106
Oil	1 litre of oil, type Shell Ondina X420. For the required oil quantity in the oil chamber, see the section Oil check and change.	All types		96586753
Lifting bracket	Lifting bracket and screw	0.9 - 1.5 kW		96984147
		2.6 kW		96984148

7.8 Service kits AUTOADAPT

The following service kits are available for all pumps.

Service kit	Contents	Pump type	Material	Product number
Shaft seal kit	Shaft seal complete	0.6 - 1.5 kW	BQQP	96106536
			BQQV	96645161
		2.6 kW	BQQP	96076123
			BQQV	96645275
O-ring kit	O-rings and gaskets for the oil screws	0.6 - 1.5 kW	NBR	96115107
			FKM	96646049
		2.6 kW	NBR	96115108
			FKM	96646060
Impeller	Impeller complete with adjusting screw, shaft screw, and key	SL1.50.65.09		96115096
		SL1.50.65.11		96115097
		SL1.50.65.15		96115098
		SLV.65.65.09		96115110
		SLV.65.65.11		96115099
		SLV.65.65.15		96115100
		EF 30.50.06		96115101
		EF 30.50.09		96115109
		EF 30.50.11		96115102
		EF 30.50.15		96115103
		DP 10.50.09		96115104
		DP 10.50.15		96115105
		DP 10.65.26		96115106
Oil	1 litre of oil, type Shell Ondina X420. For the required oil quantity, see the section Oil check and change.	All types		96586753
Lifting bracket	Lifting bracket and screw	0.9 - 1.5 kW		96984147
		2.6 kW		96984148
Power plug	Plug for the power supply and O-rings for the cover	All types		96984144
Protective cap for the level sensor	Protective cap and O-rings for the cover and the sensor	All types		96898081
Level sensor	Level sensor, protective cap and O-rings for the cover and the sensor	Standard pumps		96898082
		Ex pumps		96984130
Dry-running sensor	Dry-running sensor and O-rings for the cover and the sensor	Standard pumps		96898083
		Ex pumps		96984131
Electronic unit, single-phase	Cover with electronics and O-rings for the cover	Single-phase pumps		96898085
		Single-phase Ex pumps		96984145
Electronic unit, three-phase	Cover with electronics and O-rings for the cover	Three-phase pumps		96898086
		Three-phase Ex pumps		96984146
Pt1000 sensor	Pt1000 sensor and bracket	All types		96984143
Run capacitor	Run capacitor, Pt1000 sensor, bracket and O-rings for the cover	Single phase pumps < 1.5 kW		96984142
		1.5 kW		98564198

8. Design

8.1 Material specification, DP and EF, standard pumps

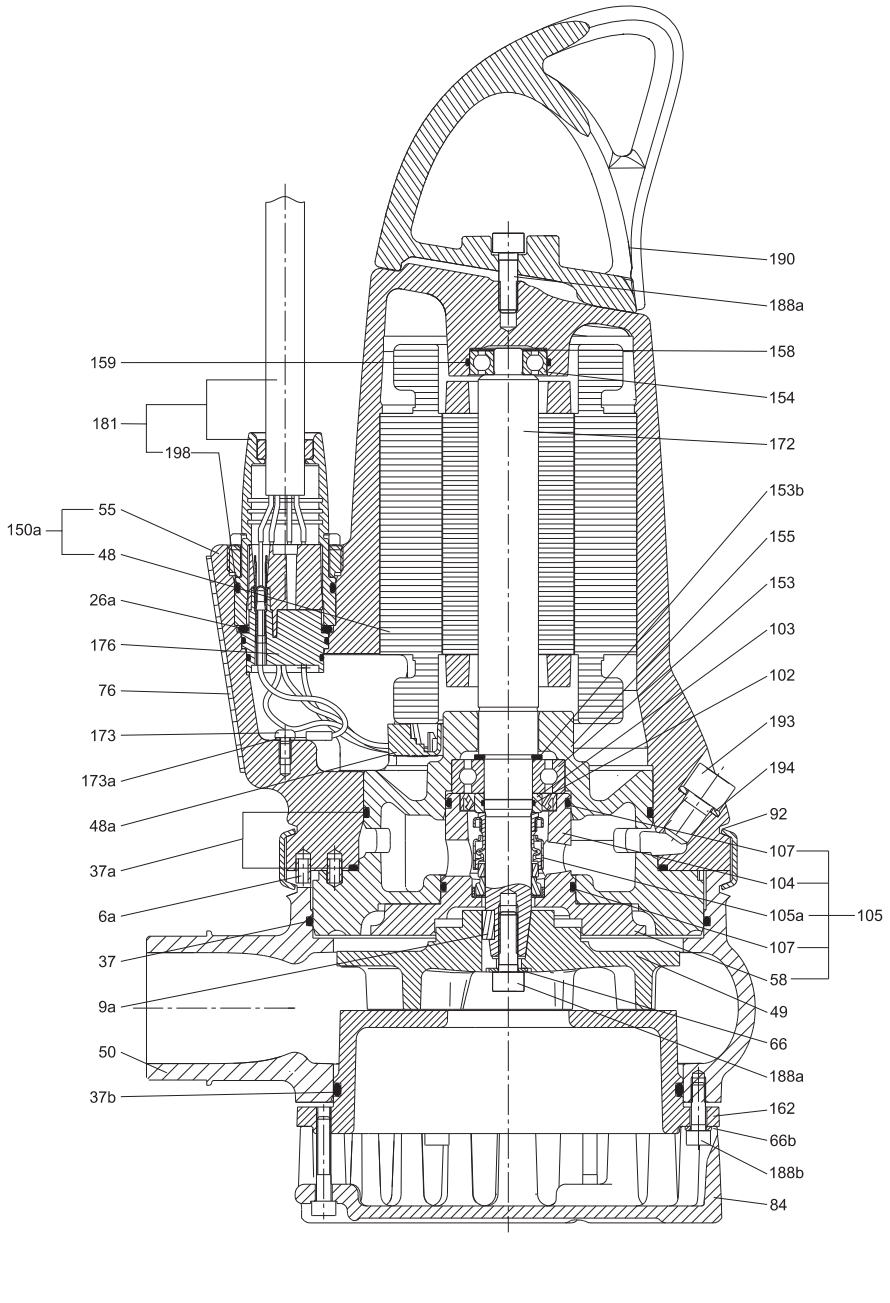

Sectional drawing, DP10.50.09/15

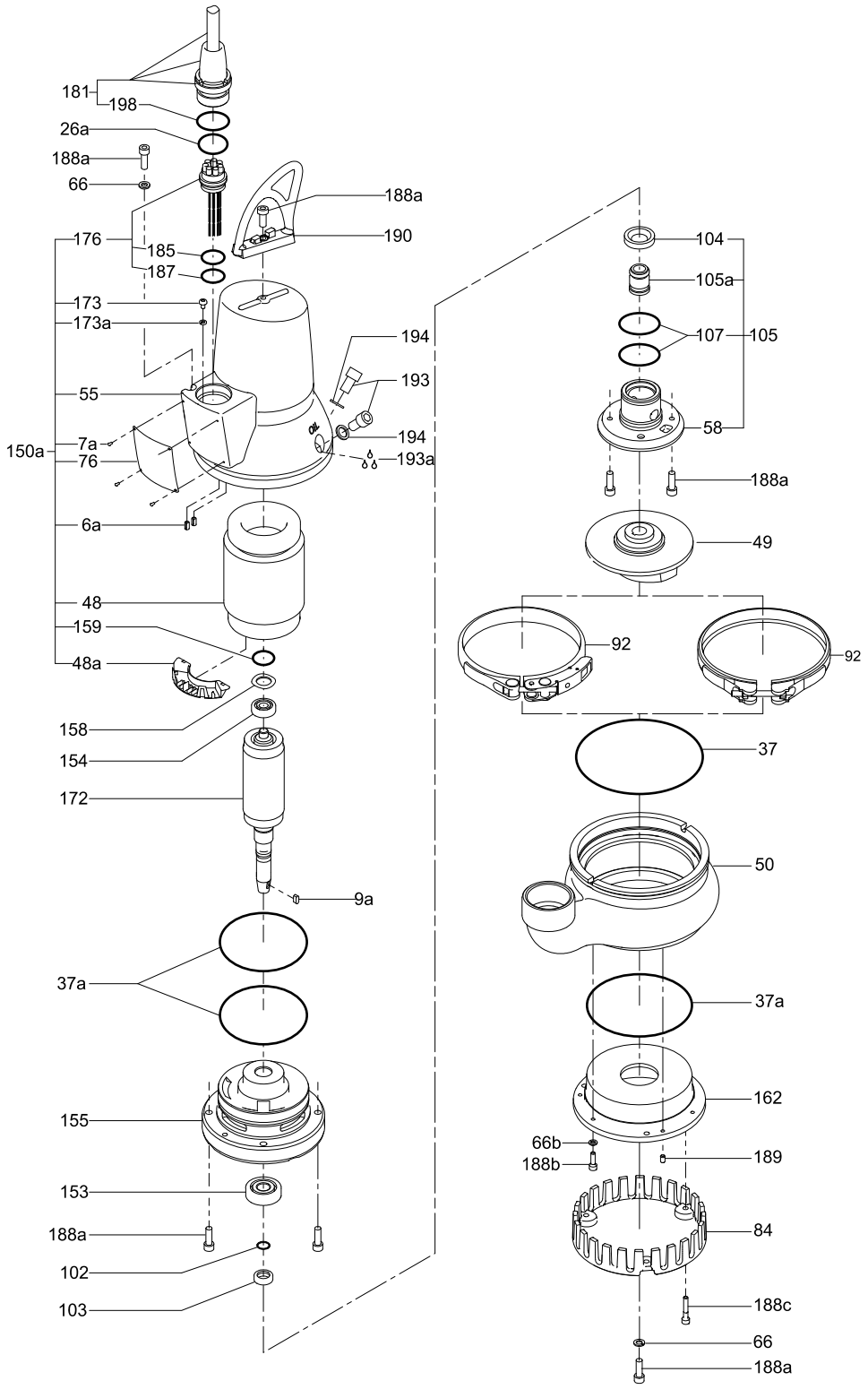

Exploded view, DP10.50.09/15

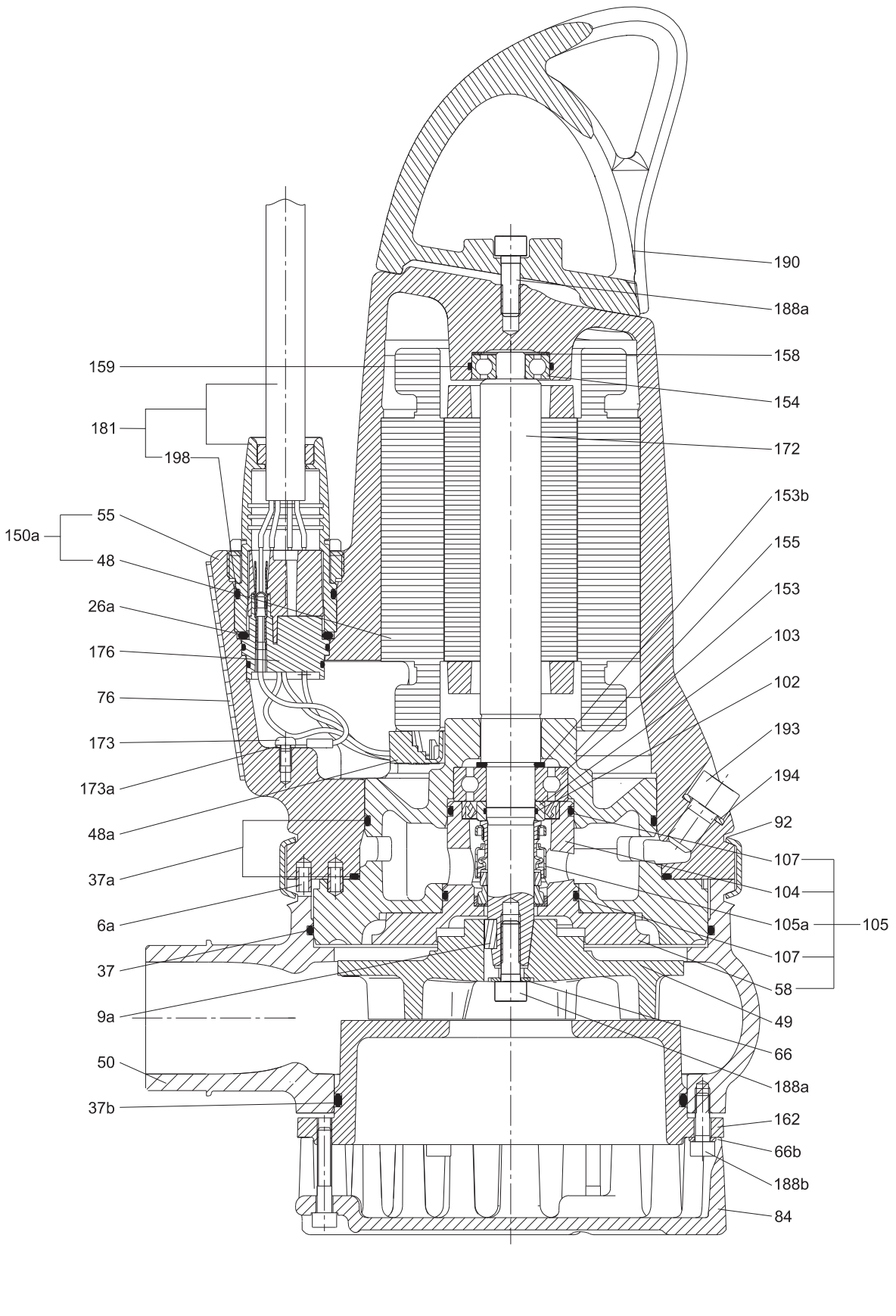

Sectional drawing, DP10.65.26

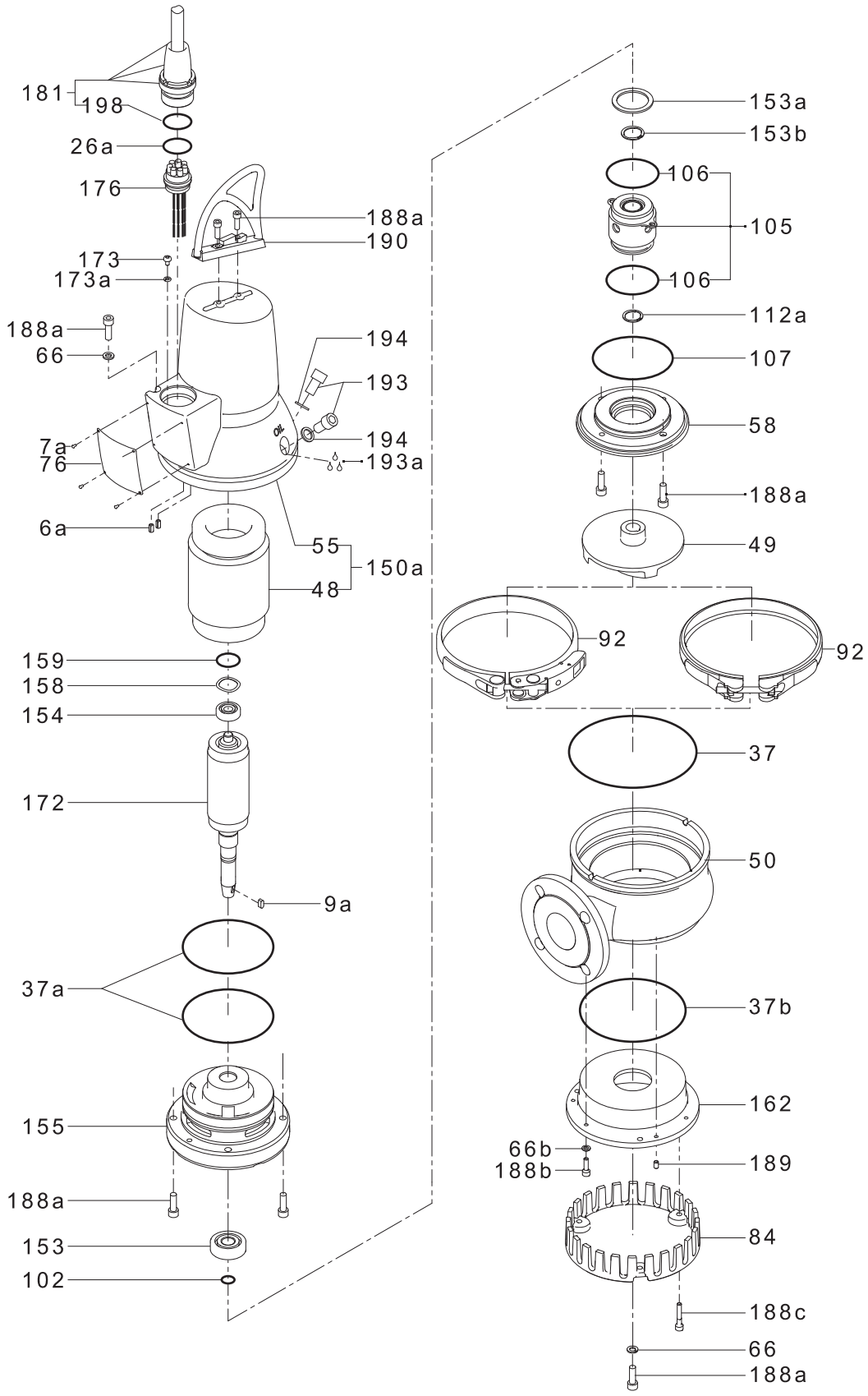

Exploded view, DP10.65.26

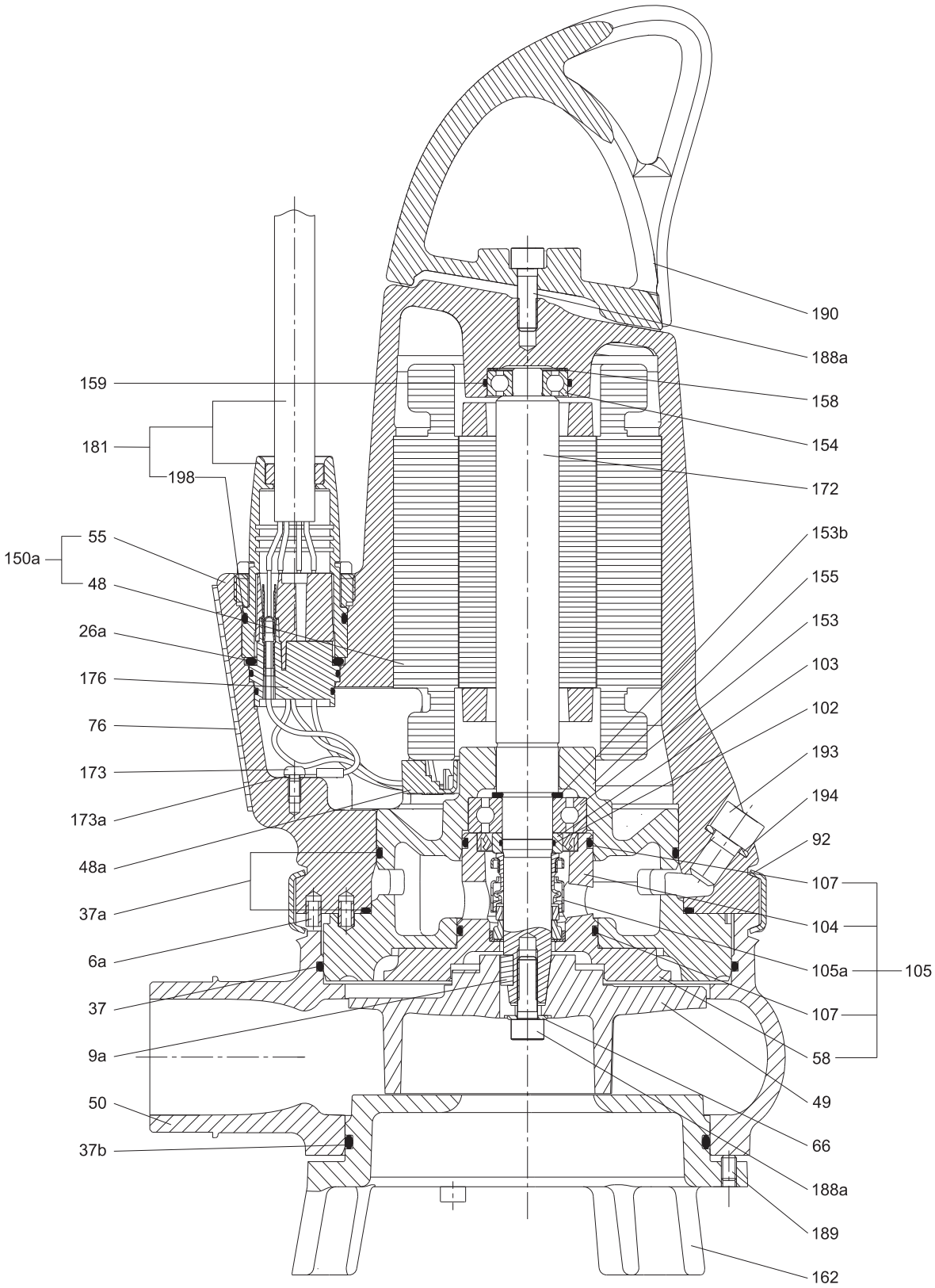

Sectional drawing, EF

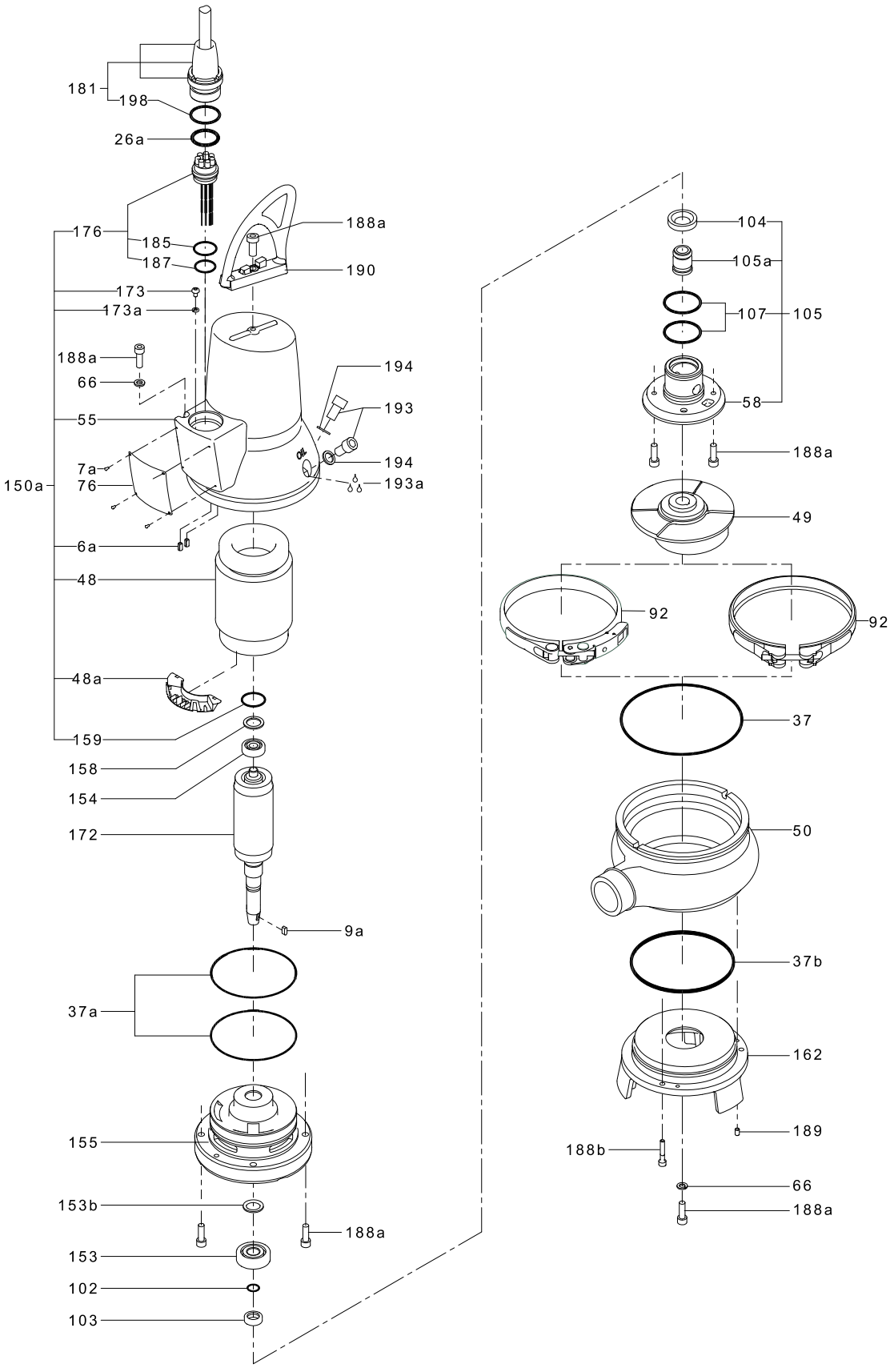

Exploded view, EF

Position	Description	Material	EN standard	AISI/ASTM
6a	Pin	Stainless steel		
7a	Rivet	Stainless steel	1.4301	304
9a	Key	Stainless steel		
26a	O-ring	NBR		
37	O-ring	NBR		
37a	O-rings	NBR		
37b	O-rings	NBR		
48	Stator			
48a	Cover			
49	Impeller	Cast iron	EN-GJS-500-7	
50	Pump housing	Cast iron	EN-GJL-250	
55	Stator housing	Cast iron	EN-JL-1030	
58	Shaft seal carrier	Cast iron	EN-JL-1030	
66	Locking ring	Stainless steel		
76	Nameplate	Stainless steel	1.4301	304
84	Strainer [1)]	Cast iron		
92	Clamp	Stainless steel	1.4301	304
102	O-ring	NBR		
103	Bush	Stainless steel	1.4057	431
104	Seal ring	NBR		
105/105a	Shaft seal	Primary seal (0.6 to 1.5 kW): SiC/SiC Secondary seal (0.6 to 1.5 kW): lip seal, NBR Primary seal (2.6 kW): SiC/SiC Secondary seal (2.6 kW): carbon/aluminium oxide Other components: NBR, stainless steel		
107	O-rings	NBR		
150a	Stator housing complete			
153	Bearing (lower)	Up to and including 1.5 kW: 6204 2.6 kW: 3205		
153a	Washer			
153b	Washer			
154	Bearing (upper)	Up to 1.5 kW: Single-row ball bearing 6301 2.6 kW: Single-row ball bearing 6205		
155	Oil chamber	Cast iron		
157	Washer			
158	Corrugated spring	Steel		
159	O-ring	NBR		
162	Wear plate	Cast iron		
172	Rotor Shaft		1.1181 1.4301	304
173	Screw	Steel		
173a	Washer	Steel		
176	Inner plug part	PET		
181	Outer plug part	CR rubber, cable LYNIFLEX	1.4308	CF-8
188a	Screw	Stainless steel		
188b	Locking screw			
188c	Locking screw			
189	Adjusting screw			
190	Lifting bracket	Stainless steel	1.4308	CF-8
193	Oil screw	Stainless steel		
193a	Oil	Shell Ondina X420		

Position	Description	Material	EN standard	AISI/ASTM
194	Gasket	Nylon		
198	O-ring	NBR		
	Paint	Two-component epoxy		

1) Only DP pumps

8.2 Material specification, DP 10 and EF, AUTOADAPT pumps

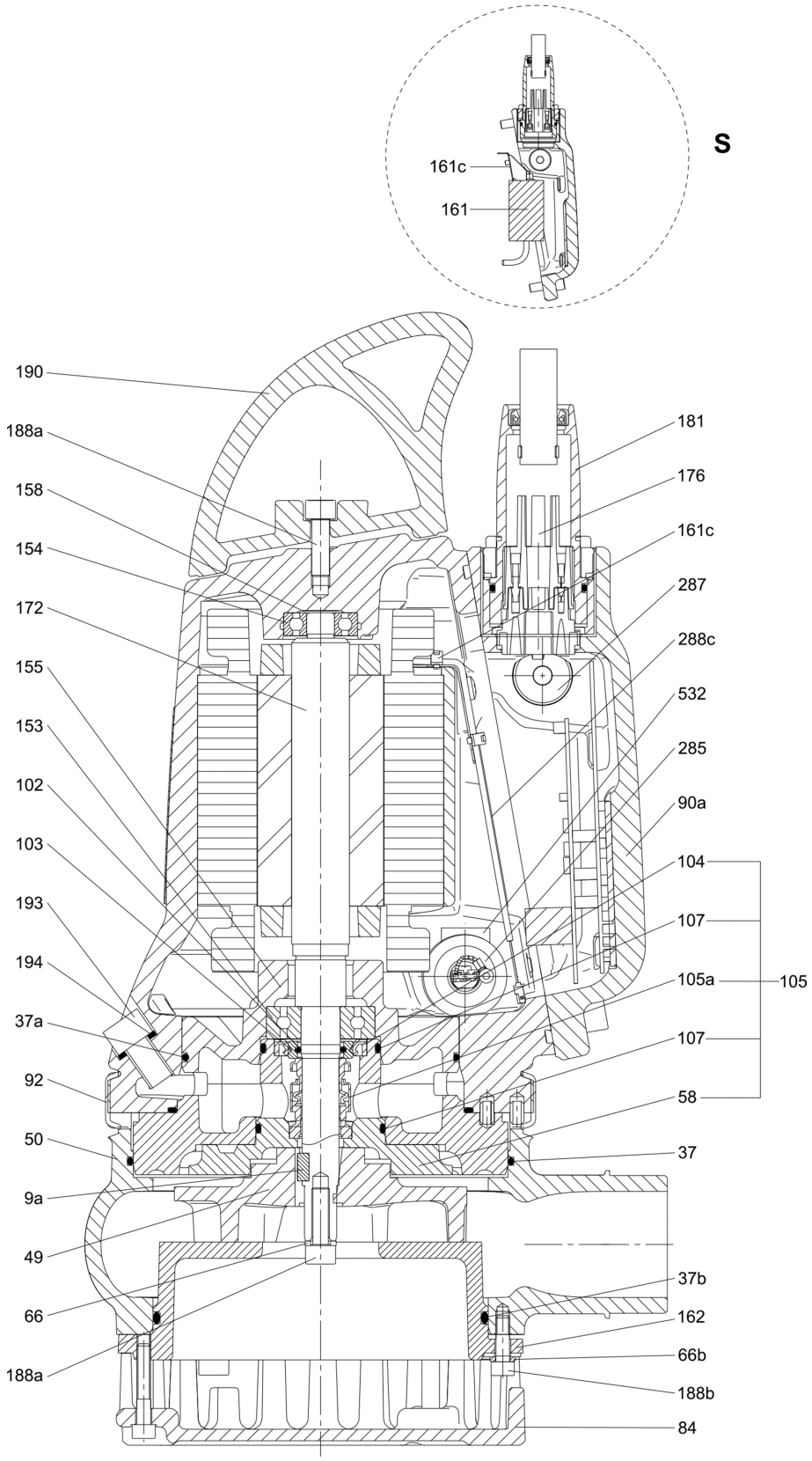

Sectional drawing, DP10.50.09/15 AUTOADAPT

Pos.	Description
S	Single-phase pumps only

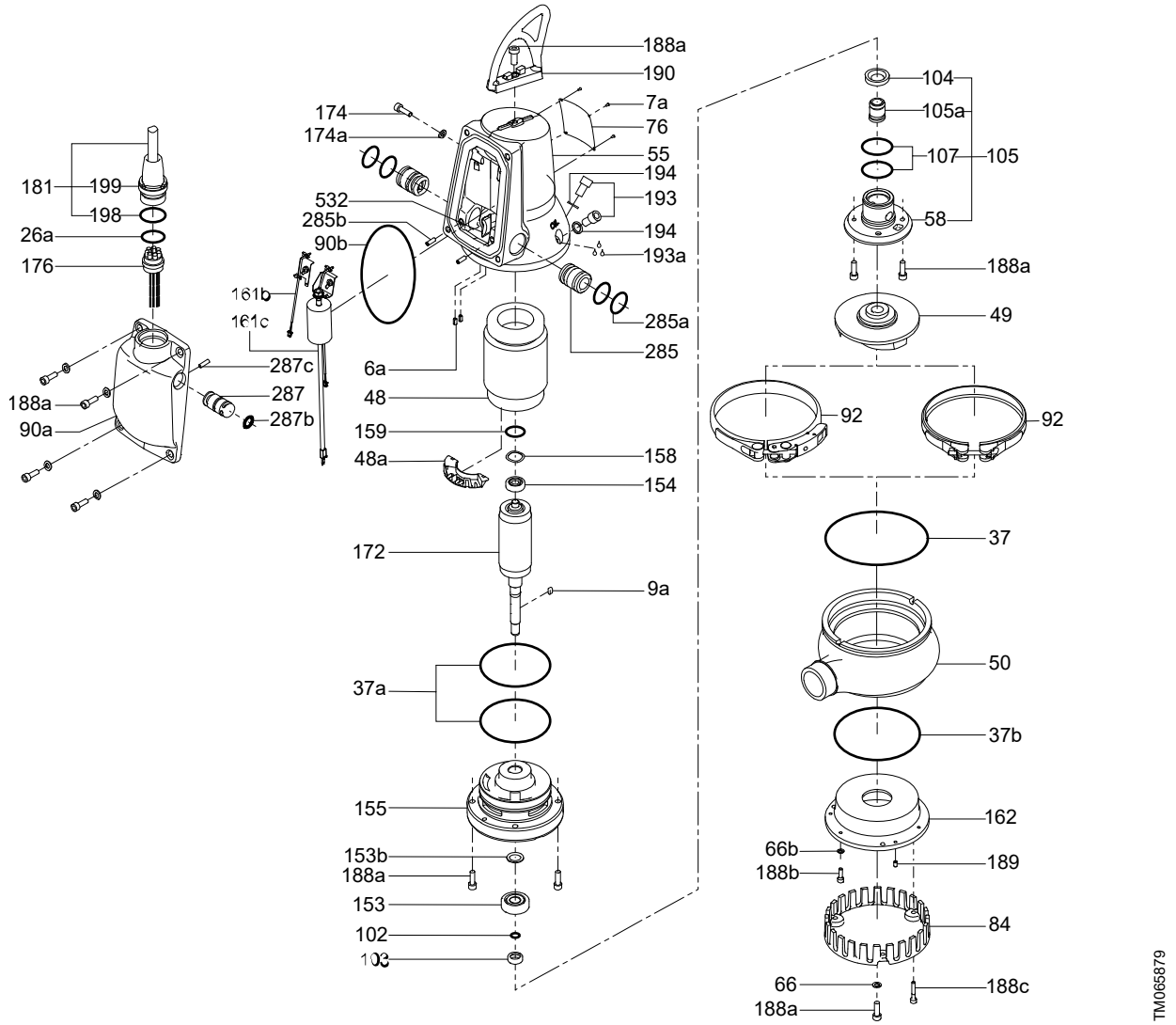

Exploded view, DP10.50.09/15 AUTOADAPT

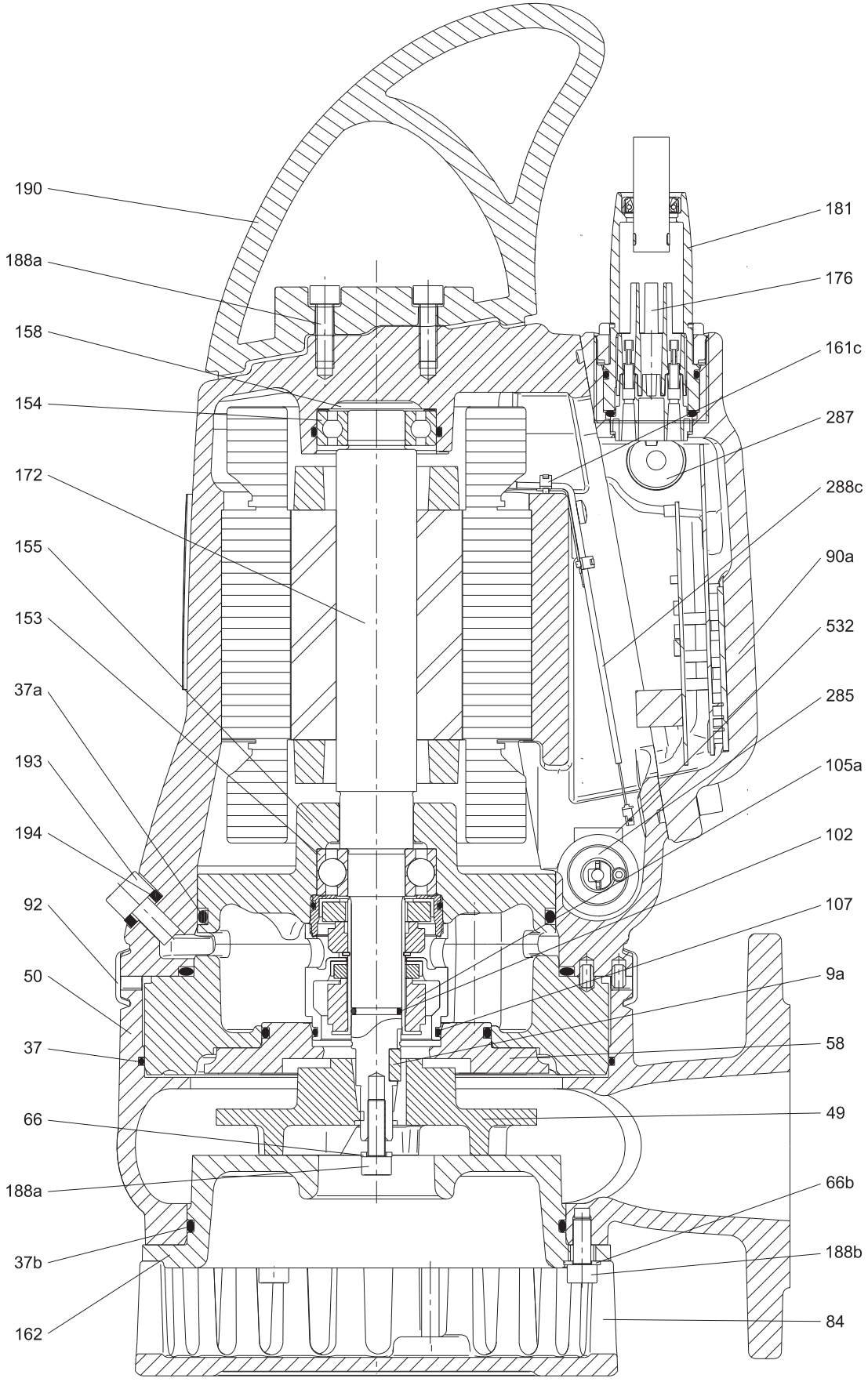

Sectional drawing, DP10.65.26 AUTOADAPT

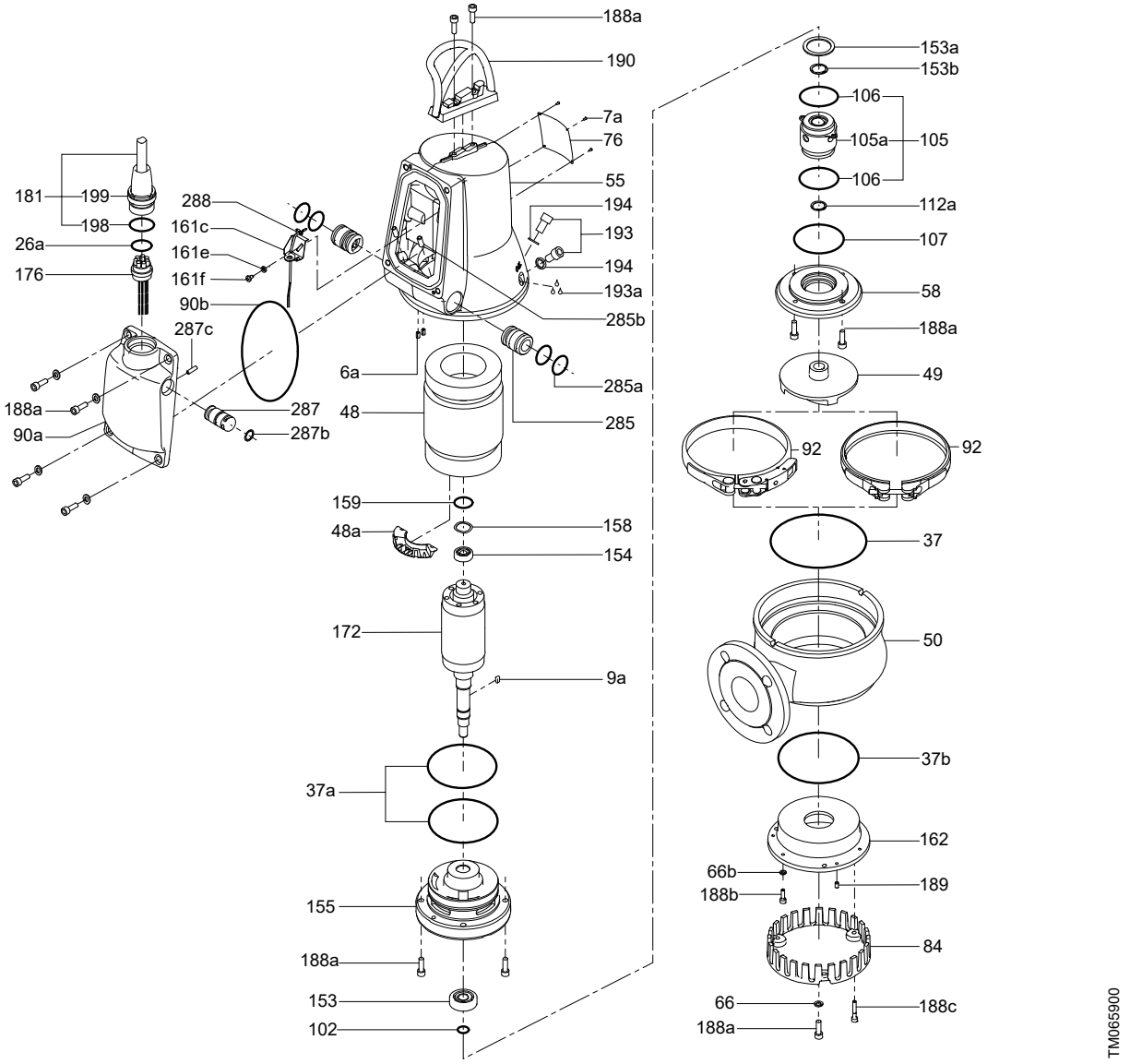

Exploded view, DP10.65.26 AUTOADAPT

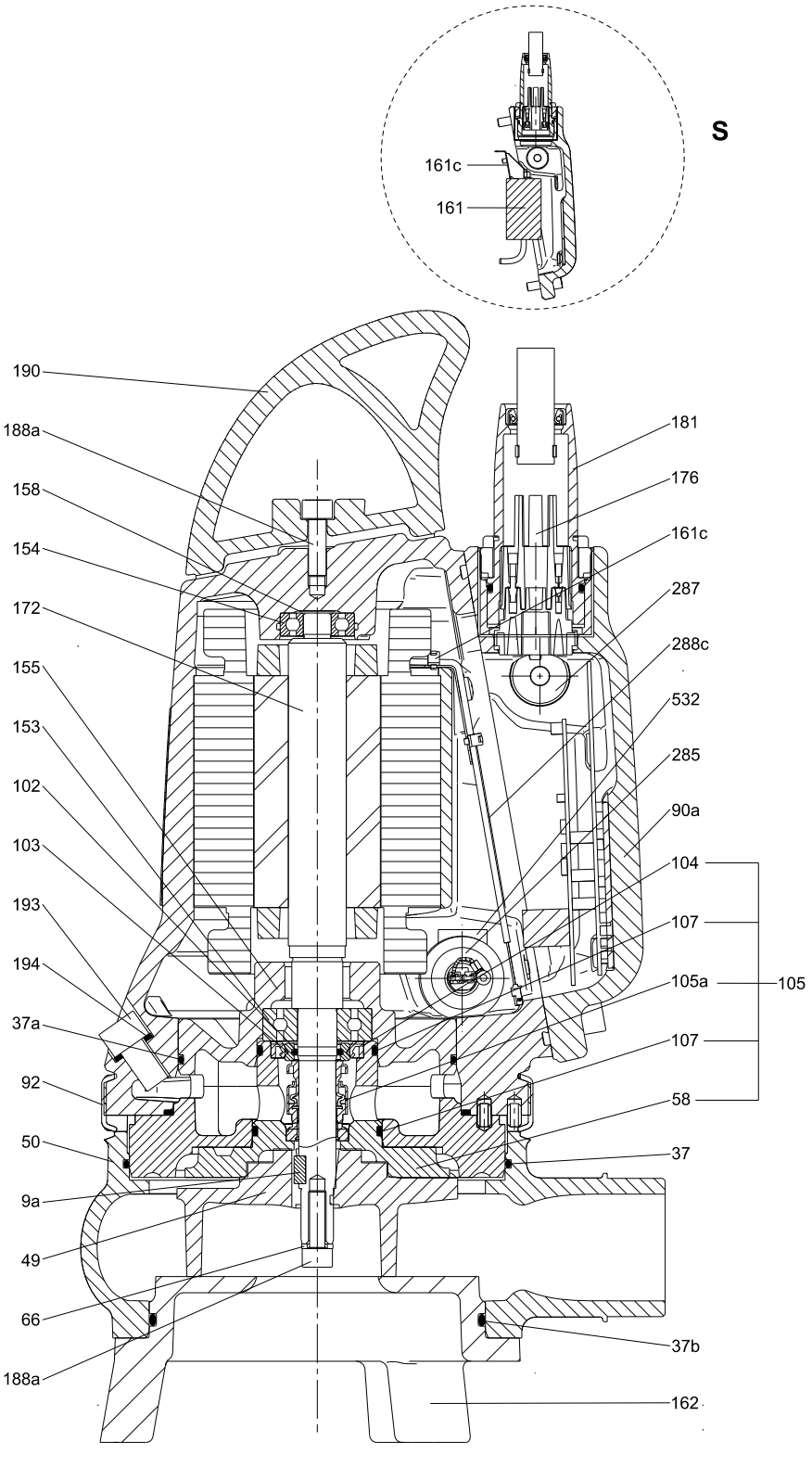

Sectional drawing, EF AUTOADAPT

Pos.	Description
S	Single-phase pumps only

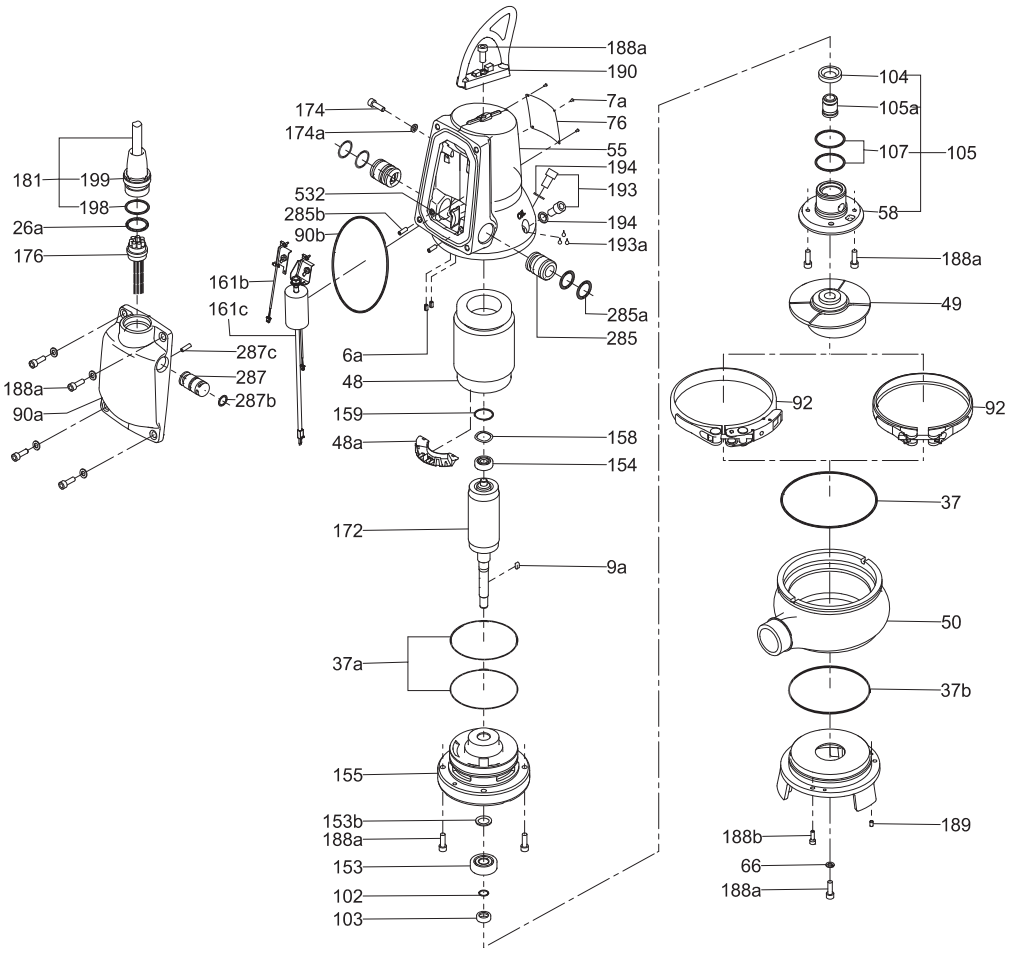

Exploded view, EF AUTOADAPT

Position	Description	Material	EN standard	AISI/ASTM
6a	Pin	Stainless steel		
7a	Rivet	Stainless steel		
9a	Key	Stainless steel		
26a	O-ring			
37	O-ring			
37a	O-rings	NBR		
37b	O-ring			
48	Stator			
48a	Terminal board			
49	Impeller	Cast iron	EN-GJS-500-7	
50	Pump housing	Cast iron	EN-JL-1030	
55	Stator housing	Cast iron	EN-JL-1030	
58	Shaft seal carrier	Cast iron	EN-JL-1030	
66	Locking ring	Stainless steel		
76	Nameplate	Stainless steel	1.4301	304
84	Inlet strainer [2)]	Cast iron		
90a	Electronic unit			
90b	O-ring			
92	Clamp	Stainless steel	1.4301	304
102	O-ring	NBR		
103	Bush	Stainless steel	1.4057	431
104	Seal ring	NBR		
105/105a	Shaft seal	Primary seal (0.6 to 1.5 kW): SiC/SiC Secondary seal (0.6 to 1.5 kW): lip seal, NBR Primary seal (2.6 kW): SiC/SiC Secondary seal (2.6 kW): carbon/aluminium oxide Other components: NBR, stainless steel		
107	O-rings	NBR		
153	Bearing (lower)	Up to and including 1.5 kW: 6204 2.6 kW and up: 3205		
154	Bearing (upper)	Up to and including 1.5 kW: 6201 2.6 kW: 6205		
155	Oil chamber			
158	Corrugated spring	Steel		
159	O-ring	NBR		
161b	Pt1000 sensor, with bracket			
161c	Run capacitor and Pt1000 sensor, with bracket [3)]			
172	Rotor/shaft	Shaft part at rotor: steel Shaft end at hydraulics: stainless steel	1.1181 1.4301	304
173	Screw	Steel		
173a	Washer	Steel		
174	Earth screw			
174a	Washer			
176	Inner plug part	PET		
181	Outer plug part	CR rubber, cable LYNIFLEX	1.4308	CF-8
188a	Screw	Stainless steel		
188b	Locking screw	Steel		
188c	Screw	Steel		
189	Adjusting screw	Steel		
190	Lifting bracket	Stainless steel	1.4308	CF-8
193	Oil screw	Stainless steel		
193a	Oil	Shell Ondina X420		
194	Gasket	Nylon		

Position	Description	Material	EN standard	AISI/ASTM
198	O-ring	NBR		
199	Union nut			
285	Dry-running sensors [4]			
285a	O-ring	NBR	1.4308	CF-8
285b	Set screw			
287	Level sensor			
287b	O-ring			
287c	Set screw			
532	Drying bag			
	Paint	Two-component epoxy		

2) DP pumps only.

3) Single-phase pumps only.

4) Explosion-proof pumps have two dry-running sensors.

8.3 Material specification, SL1 and SLV, standard pumps

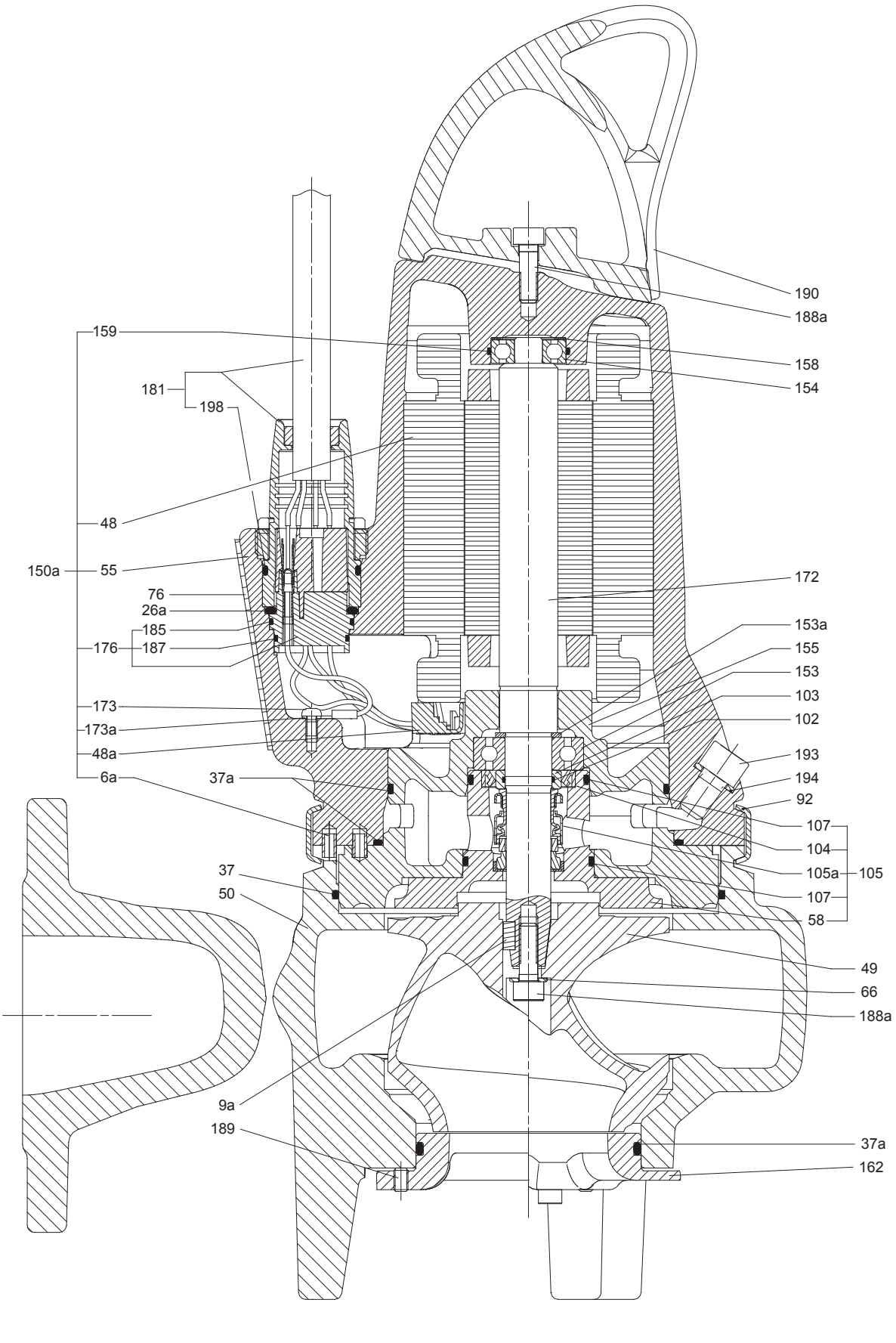

Sectional drawing, SL1.50.65.09/11/15

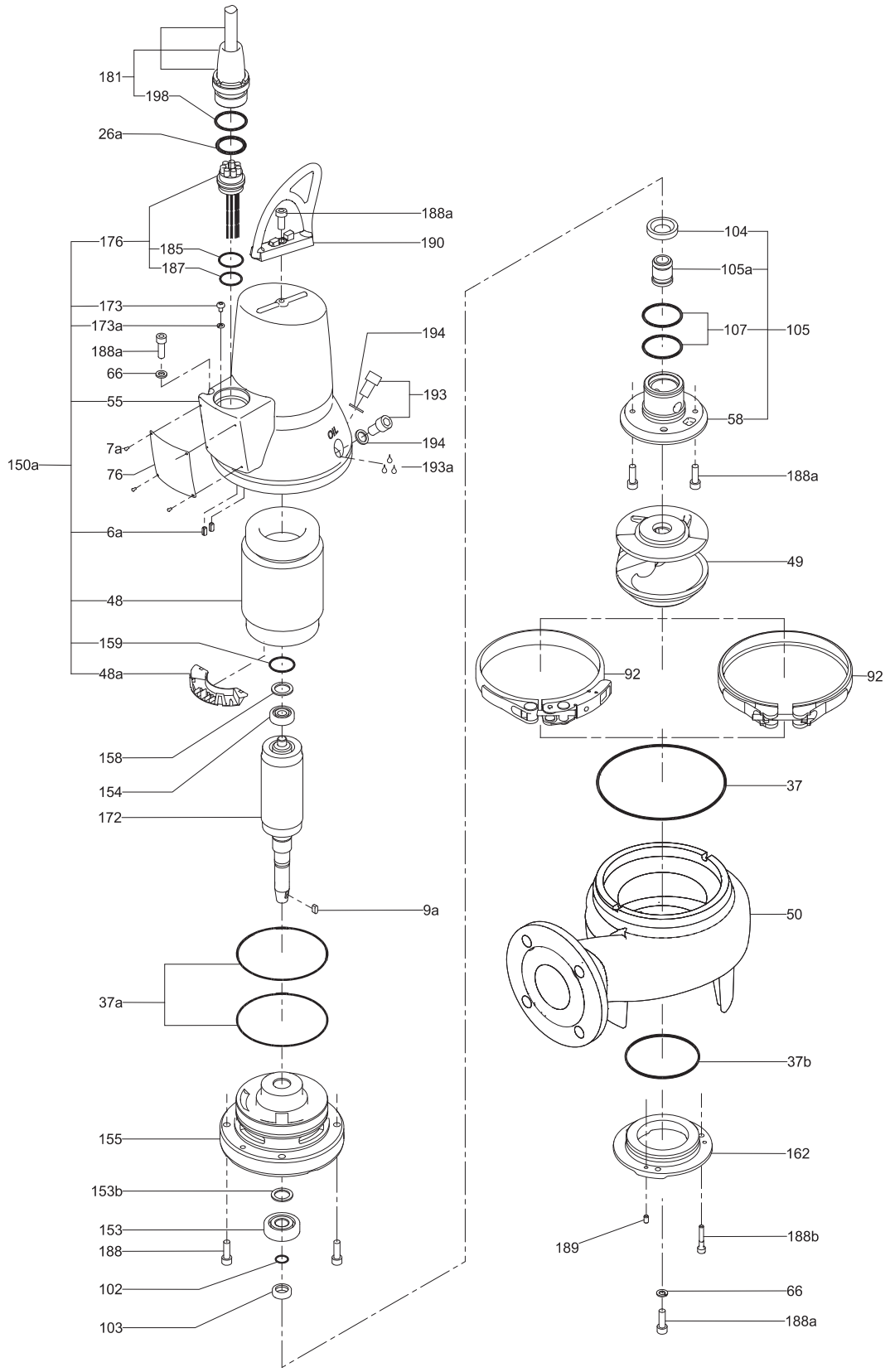

Exploded view, SL1.50.65.09/11/15

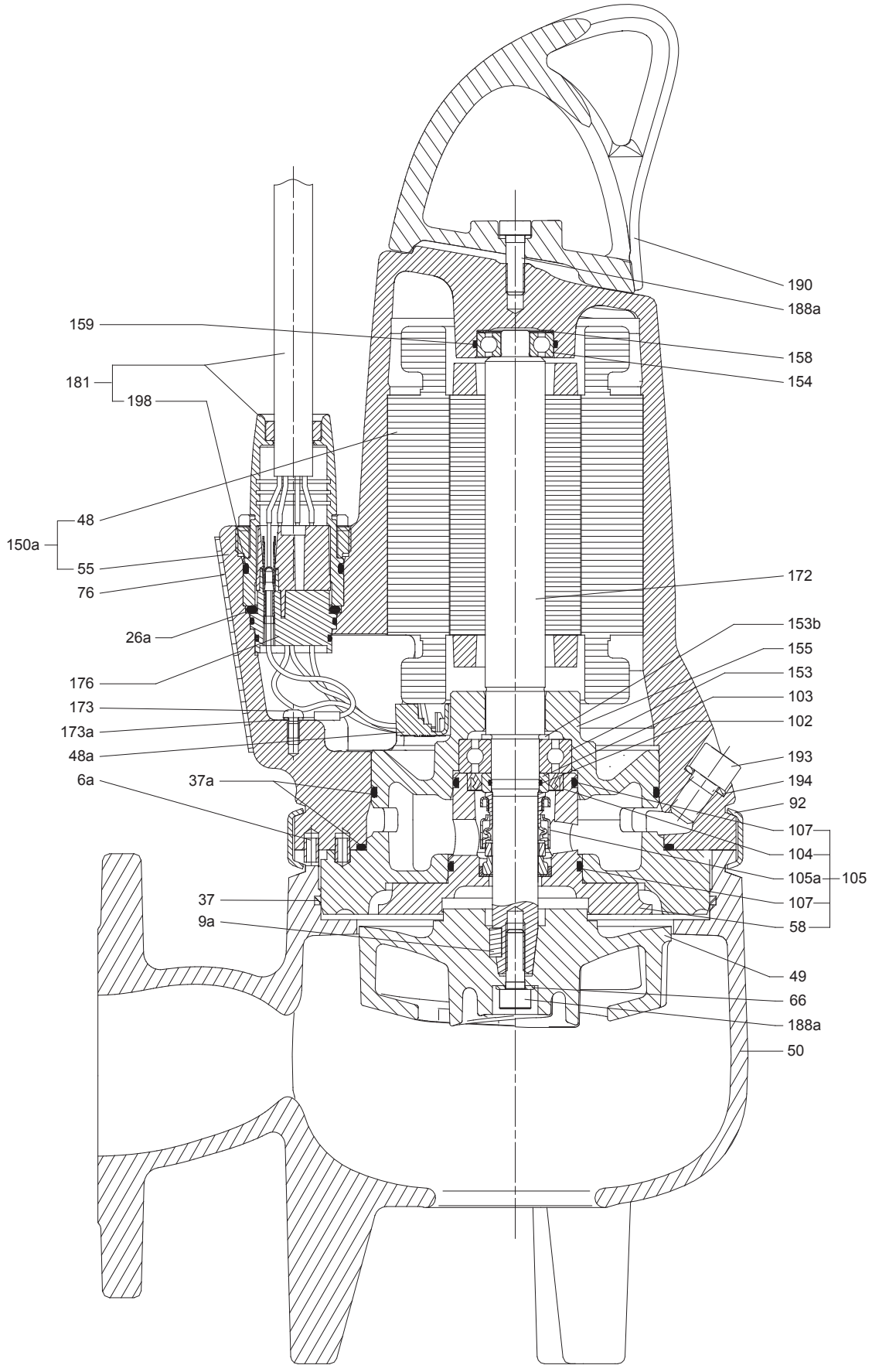

Sectional drawing, SLV.65.65.09/11/15

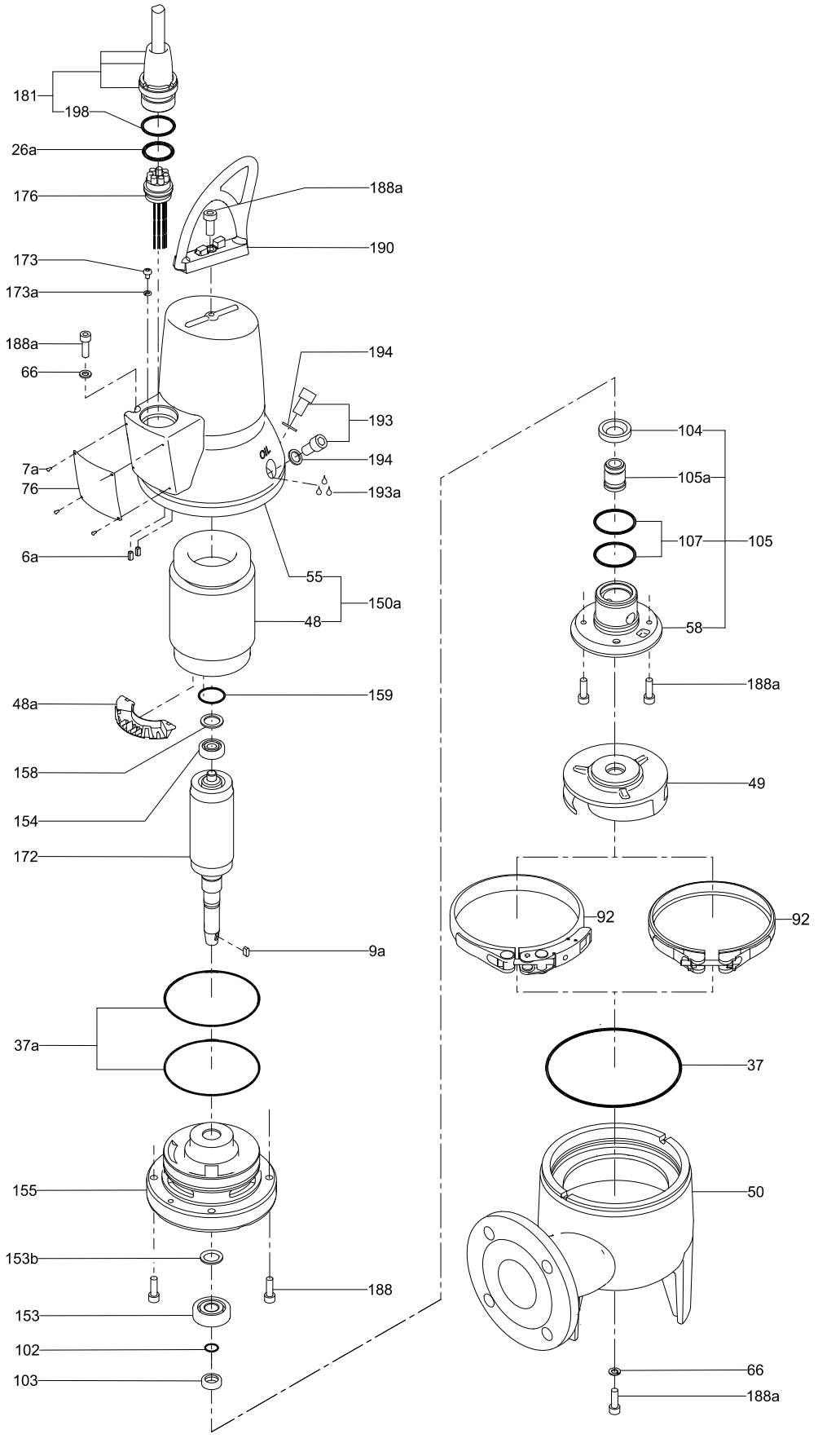

Exploded view, SLV.65.65.09/11/15

Position	Description	Material	EN standard	AISI/ASTM
6a	Pin	Stainless steel		
7a	Rivet	Stainless steel	1.4301	304
9a	Key	Stainless steel		
26a	O-ring	NBR		
37	O-ring	NBR		
37a	O-rings	NBR		
37b	O-rings	NBR		
48	Stator			
48a	Terminal board			
49	Impeller	Cast iron	SL1 = EN-GJS-500-7 SLV = EN-GJS-500-7	
50	Pump housing	Cast iron	EN-GJL-250	
55	Stator housing	Cast iron	EN-JL-1030	
58	Shaft seal carrier	Cast iron	EN-JL-1030	
66	Locking ring	Stainless steel		
76	Nameplate	Stainless steel	1.4301	304
92	Clamp	Stainless steel	1.4301	304
102	O-ring	NBR		
103	Bush	Stainless steel	1.4057	431
104	Seal ring	Primary seal (0.9 to 1.5 kW): SiC/SiC Secondary seal (0.9 to 1.5 kW): lip seal, NBR		
105/105a	Shaft seal			
107	O-rings	NBR		
150a	Stator in housing complete			
153	Bearing (lower)	6204		
153b	Washer	Steel		
154	Bearing (upper)	6301		
155	Oil chamber	Cast iron		
158	Corrugated spring	Steel		
159	O-ring	NBR		
162	Wear plate [5)]	Cast iron		
172	Rotor Shaft	Stainless steel	1.1181 1.4301	304
173	Screw	Steel		
173a	Washer	Steel		
176	Inner plug part	PET		
181	Outer plug part	CR rubber, cable LYNIFLEX	1.4308	
185	O-ring	NBR		
187	Screw	Steel		
188a	Screw	Stainless steel		CF-8
188b	Locking screw			
189	Adjusting screw			
190	Lifting bracket	Stainless steel	1.4308	
193	Oil screw	Stainless steel		CF-8
193a	Oil	Shell Ondina X420		
194	Gasket	Nylon		
198	O-ring	NBR		

5) SL1 pumps only.

8.4 Material specification, SL1 and SLV, AUTOADAPT pumps

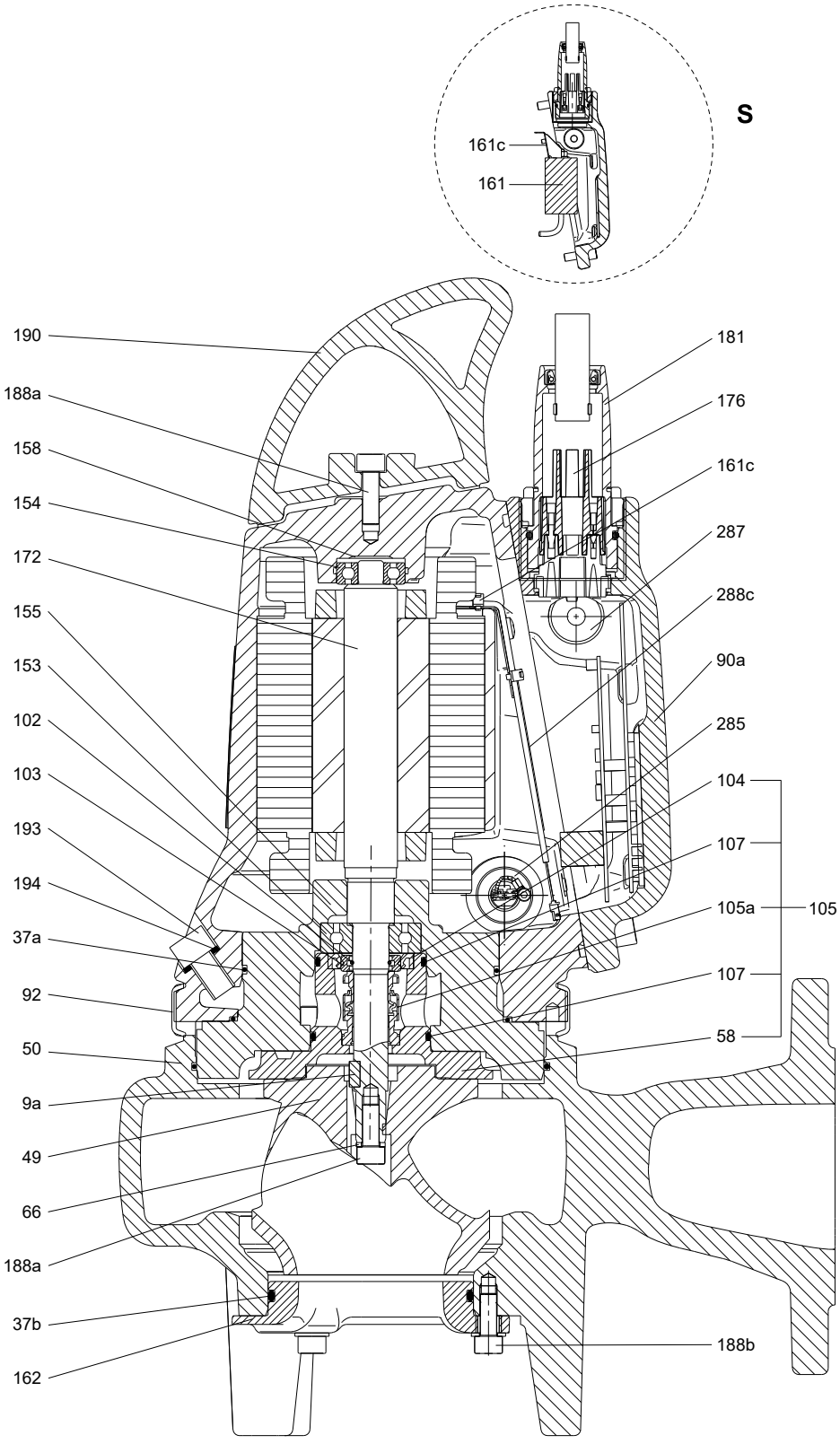

Sectional drawing, SL1.50.65.09/11/15 AUTOADAPT

Pos.	Description
S	Single-phase pumps only

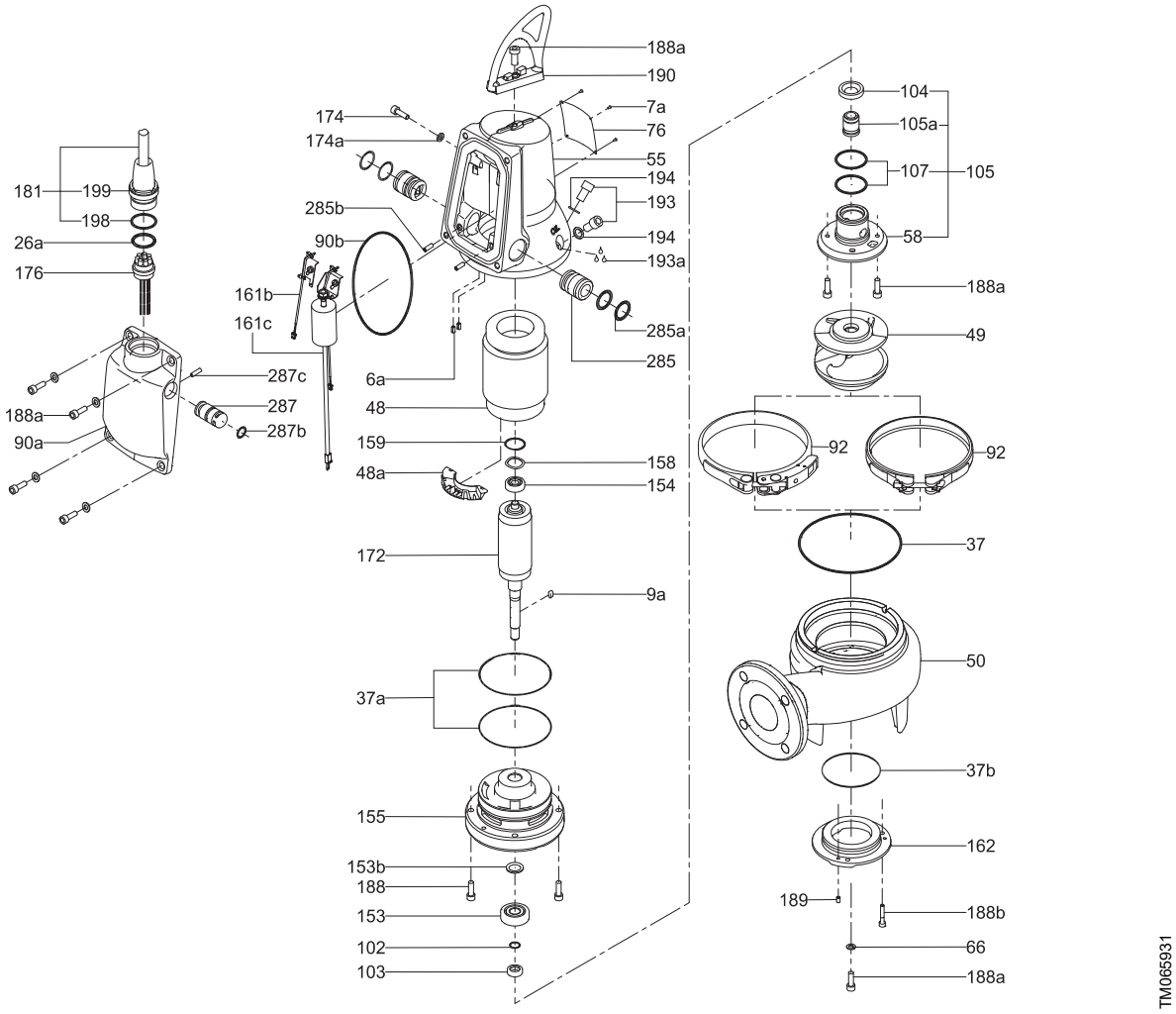

Exploded view, SL1.50.65.09/11/15 AUTOADAPT

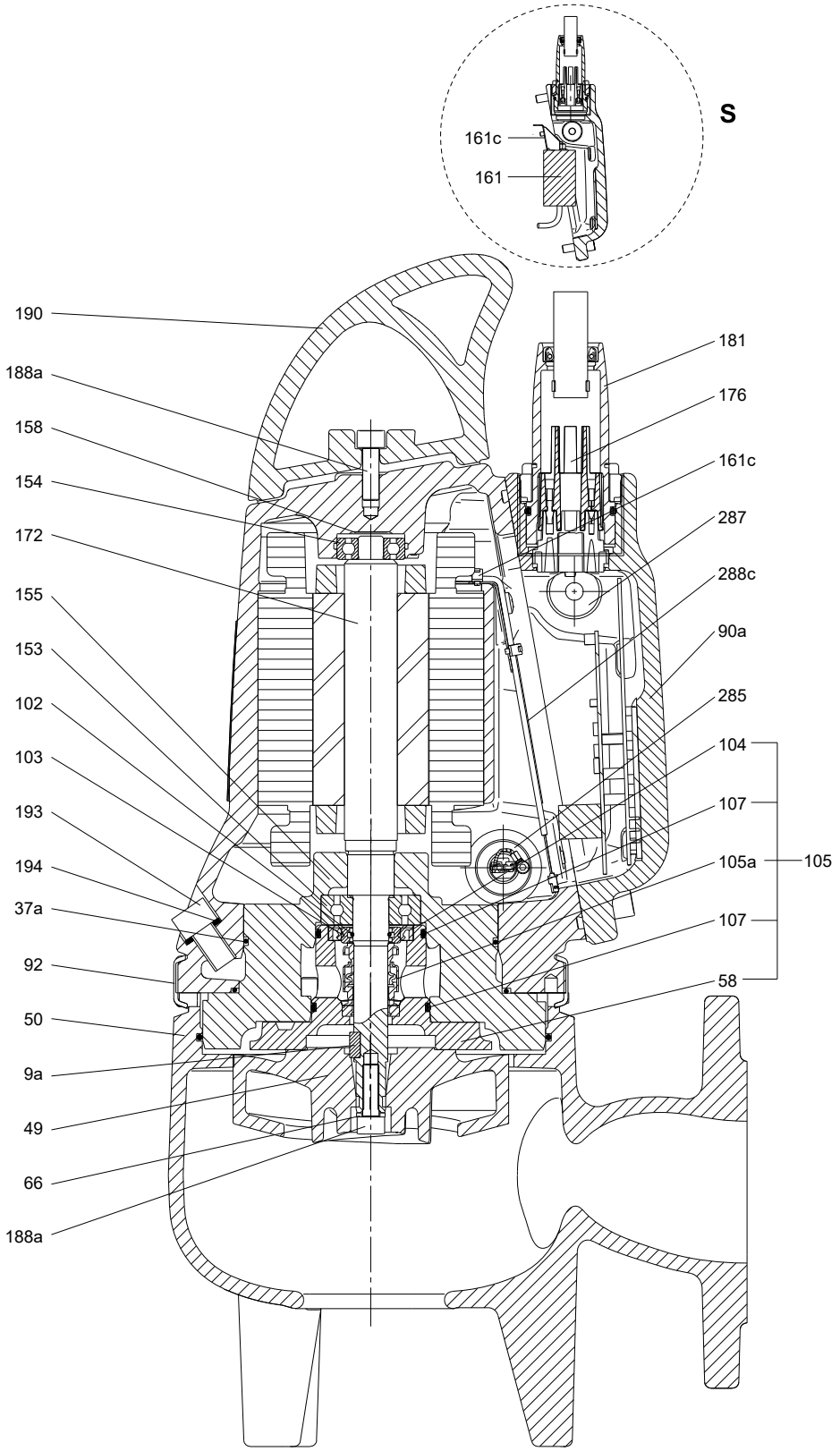

Sectional drawing, SLV.65.65.09/11/15 AUTOADAPT

Pos.	Description
S	Single-phase pumps only

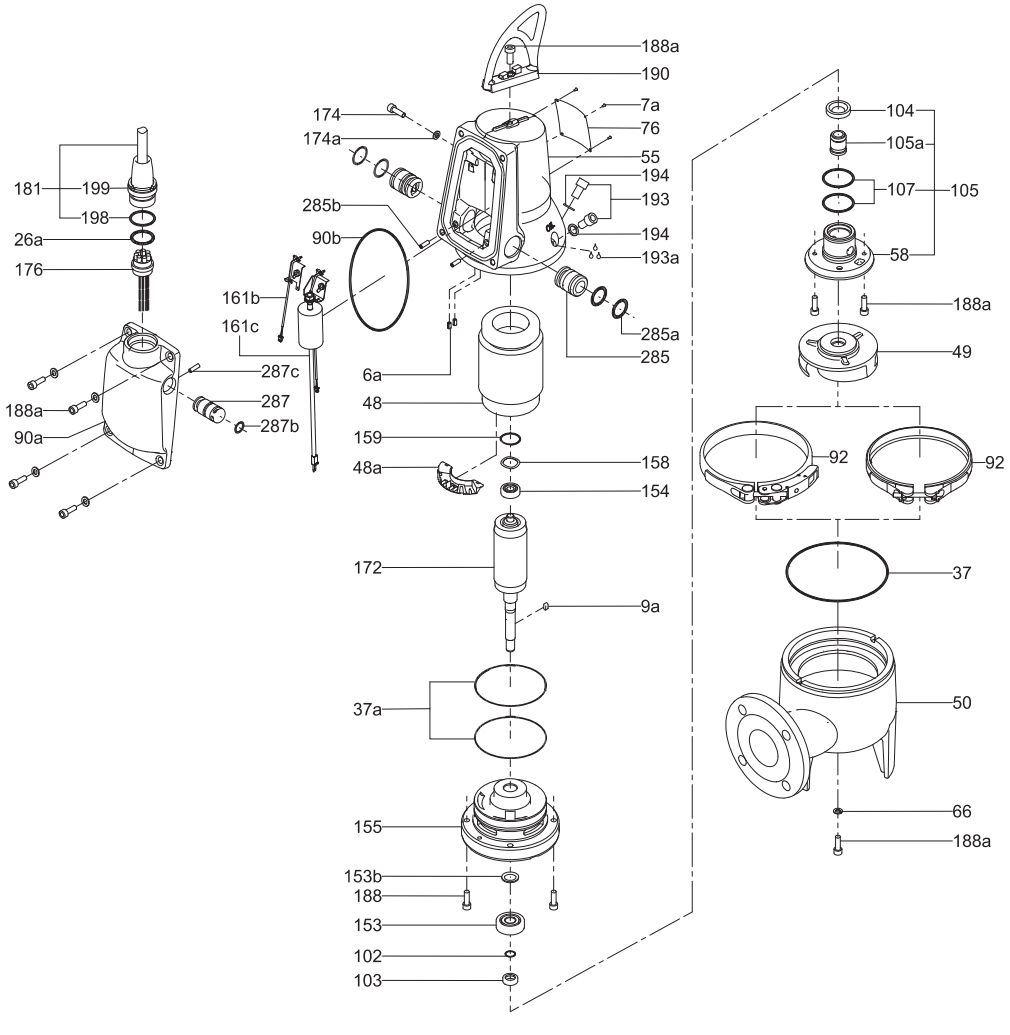

Exploded view, SLV.65.65.09/11/15 AUTOADAPT

Position	Description	Material	EN standard	AISI/ASTM
6a	Pin	Stainless steel		
7a	Rivet	Stainless steel		
9a	Key	Stainless steel		
26a	O-ring			
37	O-ring			
37a	O-rings	NBR		
37b	O-ring			
48	Stator			
48a	Terminal board			
49	Impeller	Cast iron	SL1 = EN-GJS-500-7 SLV = EN-GJS-400-15	
50	Pump housing	Cast iron	EN-JL-1030	
55	Stator housing	Cast iron	EN-JL-1030	
58	Shaft seal carrier	Cast iron	EN-JL-1030	
66	Locking ring	Stainless steel		
76	Nameplate	Stainless steel	1.4301	304
90a	Electronic unit			
90b	O-ring			
92	Clamp	Stainless steel	1.4301	304
102	O-ring	NBR		
103	Bush	Stainless steel	1.4057	431
104	Seal ring	NBR		
105/105a	Shaft seal	Primary seal (0.9 to 1.5 kW): SiC/SiC Secondary seal (0.9 to 1.5 kW): lip seal, NBR		
107	O-rings	NBR		
153	Bearing (lower)	Up to and including 1.5 kW: 6204		
154	Bearing (upper)	Up to and including 1.5 kW: 6201		
155	Oil chamber			
158	Corrugated spring	Steel		
159	O-ring	NBR		
161b	Pt1000 sensor, with bracket			
161c	Run capacitor and Pt1000 sensor, with bracket [6)]			
162	Wear plate [7)]	Cast iron		
172	Rotor/shaft	Shaft part at rotor: steel Shaft end at hydraulics: stainless steel	1.1181 1.4301	304
173	Screw	Steel		
173a	Washer	Steel		
174	Earth screw			
174a	Washer			
176	Inner plug part	PET		
181	Outer plug part	CR rubber, cable LYNIFLEX	1.4308	CF-8
188a	Screw	Stainless steel		
188b	Locking screw	Steel		
190	Lifting bracket	Stainless steel	1.4308	CF-8
193	Oil screw	Stainless steel		
193a	Oil	Shell Ondina X420		
194	Gasket	Nylon		
198	O-ring	NBR		
199	Union nut			
285	Dry-running sensors [8)]			
285a	O-ring	NBR	1.4308	CF-8

Position	Description	Material	EN standard	AISI/ASTM
285b	Set screw			
287	Level sensor			
287a	Protection cap			
287b	O-ring			
287c	Set screw			
532	Drying bag			
	Paint	Two-component epoxy		

6) Single-phase pumps only.

7) SL1 pumps only.

8) Explosion-proof pumps have two dry-running sensors.

9. Disassembling the product

9.1 Warnings and notes disassembly/assembly

WARNING
Crushing hazard
Death or serious personal injury
- Do not stand near or under the pump when it is lifted.

WARNING
Electric shock
Death or serious personal injury
- Before starting any work on the product, make sure that the fuses have been removed or the main switch has been switched off and locked in position 0. Make sure that the power supply cannot be switched on unintentionally.

Please refer to the sectional drawings included in chapter "Design" for the indicated position numbers.

9.2 Draining the motor oil

When the pump is new or after replacement of the shaft seal, check the motor liquid level and water content after one week. Change the oil in the oil chamber at least once a year or after 3000 operating hours. The number of operating hour can be read by means of a CIU XX2 and a Grundfos GO remote control.

Change the oil if the shaft seal has been replaced.

CAUTION
Pressurised system
Minor or moderate personal injury
- When slackening the screws of the oil chamber, note that pressure may have built up in the chamber. Do not remove the screws until the pressure has been fully relieved.

Quantity of oil

The table shows the quantity of motor oil in the cooling chamber.

Pump type [kW]	Oil in oil chamber [l]
0.9 to 1.5 kW	0.17
2.6 to 4.0 kW	0.42

Use Shell Ondina X420 motor oil (product No 96586753).

Draining the motor oil

1. Place the pump with the oil level screw pointing downwards.

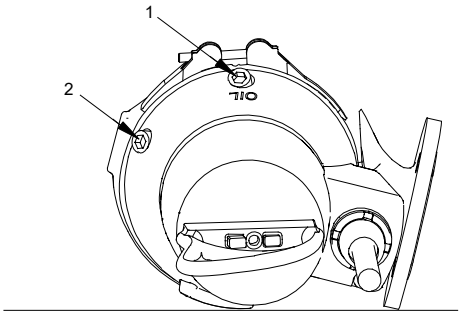

TM065911

Oil screws

Pos.	Description
1	Oil filling screw
2	Oil level screw

2. Place a container with a capacity of 0.5 litre under the pump.
3. Slacken and remove both oil screws (193) and gaskets (194) to allow all the oil to drain from the chamber.
4. Check the oil for impurities. This will give a good indication of the condition of the shaft seal.
5. Clean the pump for spilled oil.

Used motor oil must be disposed of in accordance with local regulations.

Filling the oil chamber with oil

1. Place the pump in such a position that it is lying on the stator housing and the outlet flange with the oil screws pointing upwards. See fig.
2. Fill oil into the oil chamber through the oil filling hole until it starts running out of the oil level hole. The oil level is now correct.
3. Fit the gaskets (194) and both oil screws (193). Tighten the screws to 20 Nm ± 2.
4. Clean the pump for spilled oil.

9.3 Removing the pump housing

1. Place the pump vertically.
2. Support the pump from the lifting bracket (190) with a hoist.
3. Loosen the clamp (92) holding the pump housing (50) and stator housing (55) together.
4. Lift the pump housing (50) off the stator housing (55) including the O-ring (37) and the impeller (49). Place the pump horizontally.
5. Clean the pump housing (50).

Clean the pump housing (50). Grind the surfaces slightly with emery cloth, if necessary.

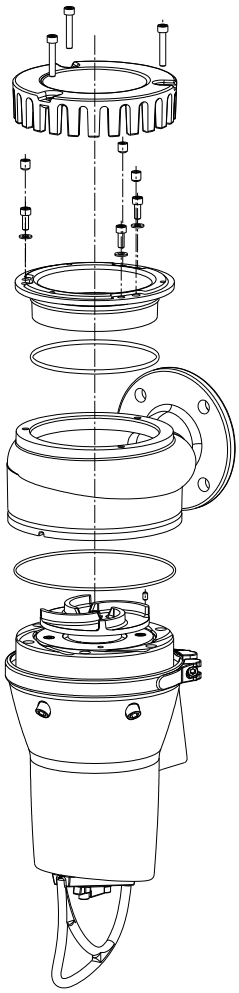

TM088911

DP pump housing with stand

9.4 Removing the impeller

CAUTION
Sharp element
Minor or moderate personal injury
- Be careful of the sharp edges of the impeller and the grinder head.

1. Insert the punch (F) into the impeller (49) to prevent it from moving during dismantling.
2. Remove the adjusting nut (68).
3. Fit the puller (A) on the shaft.
4. Fit the M8 screw in the puller and pull out the impeller (49).
5. Remove the key (9a).
6. Clean the shaft and key.

Clean the impeller. Grind the surfaces slightly with emery cloth, if necessary.

Example:

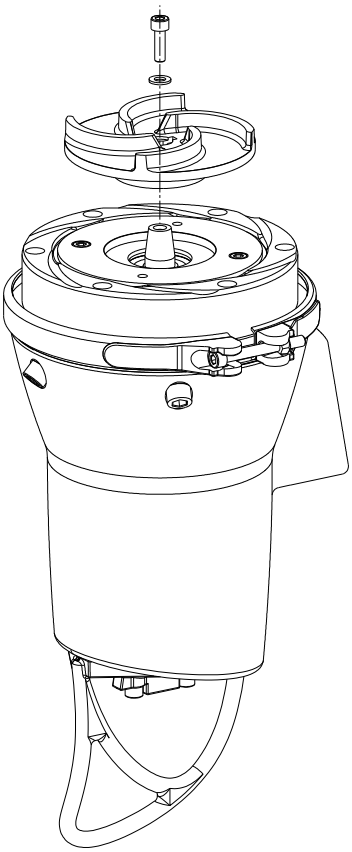

Removing the impeller DP pumps

9.5 Removing the shaft seal

The shaft seal is a complete unit for all pumps.

1. Remove the two screws (188a) in the middle securing the shaft seal carrier (58), and fit them into the tapped extractor holes in the shaft seal carrier.
2. Remove the shaft seal assembly by means of the two screws (188a).
3. Pull out the shaft seal assembly (105).
4. Check the condition of the shaft where the secondary seal of the shaft seal touches the shaft. The bush (103) fitted to the shaft must be intact.

1. Remove the retaining ring (112a).
2. Remove the two screws (188a) in the middle securing the shaft seal carrier (58), and fit them into the tapped extractor holes in the shaft seal carrier.
3. Remove the shaft seal carrier (58) by means of the two screws (188a).
4. Remove the retaining ring (112a).
5. Pull out the shaft seal assembly (105).
6. Check the condition of the shaft where the secondary seal of the shaft seal touches the shaft. The bush (103) fitted to the shaft must be intact.

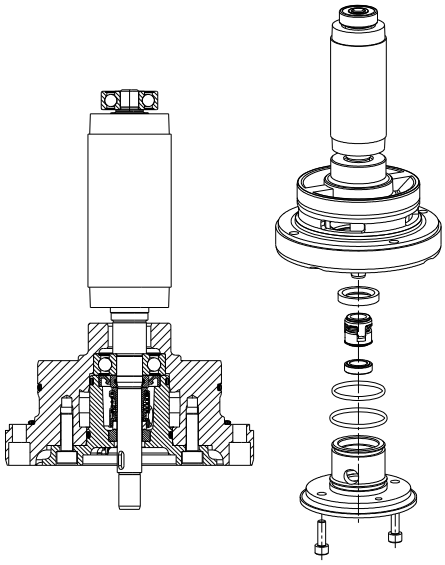

Shaft seal

9.6 Removing the bearings

1. Remove the four screws (188a) from the oil chamber (155).
2. Remove the oil chamber (155) from the stator housing (55) using screwdrivers (E). If the fitting is tight, remove the oil chamber assembly by gently tapping the screwdrivers with a plastic hammer (K).

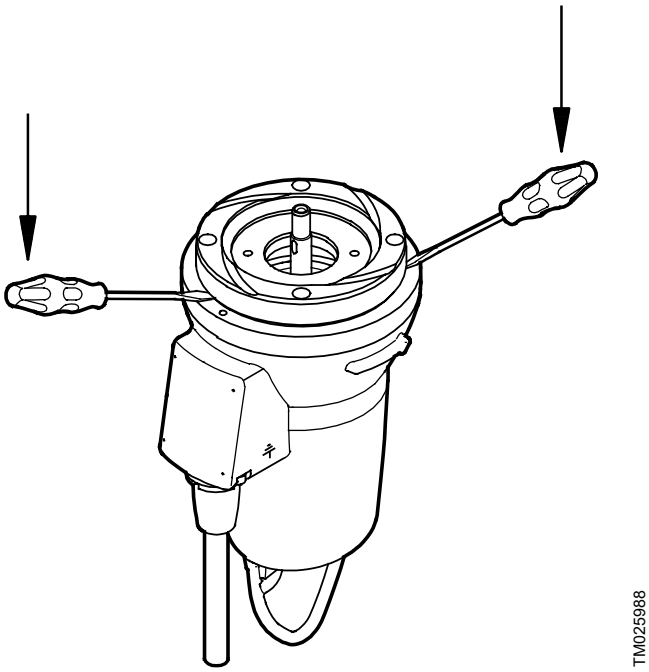

Removing the oil chamber

3. Place the oil chamber assembly in a vice and check that the rotor is not damaged.
4. Remove the O-rings (37a) from the oil chamber (155).

5. Pull out the bush (103) including the O-ring (102) from the rotor/shaft (172).
6. Pull the oil chamber (155) out of the rotor/shaft (172) using a puller.

If you remove the rotor/shaft from the oil chamber, it will break the lower bearing. Replace the broken bearing.

7. Remove the O-rings (37a) from the oil chamber (155).
8. Pull the lower bearing (153) out of the oil chamber (155).
9. Pull the upper bearing (154) off the rotor/shaft (172) using a puller.
10. Remove the corrugated spring (158).

10. Assembling the product

10.1 Warnings and notes disassembly/assembly

WARNING
Crushing hazard
Death or serious personal injury
- Do not stand near or under the pump when it is lifted.

WARNING
Electric shock
Death or serious personal injury
- Before starting any work on the product, make sure that the fuses have been removed or the main switch has been switched off and locked in position 0. Make sure that the power supply cannot be switched on unintentionally.

Please refer to the sectional drawings included in chapter "Design" for the indicated position numbers.

10.2 Fitting the bearings

Lower bearings

1. Clean the bearing in the oil chamber (155).
2. Heat the oil chamber (155) up to 100 °C.
3. Press the cold lower bearing (153) into the heated oil chamber (155). Press and let the oil chamber cool. Use a heat-resistant punch.
4. Allow the assembly to cool.

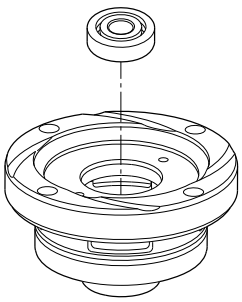

Fitting the lower bearing in the heated oil chamber

5. Fix the rotor/shaft (172) in a vice with the shaft pointing upwards.

To avoid damaging the rotor, do not overtighten the vice. Use protection between vice and rotor.

6. Fit the oil chamber (155) with bearing (153) on the rotor/shaft (172). Fit the punch (F) on the inner ring and tighten gently. See fig. .

Fitting the oil chamber on the rotor/shaft

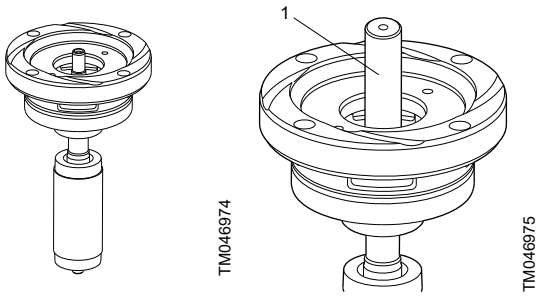

Pos.	Description
1	Punch

7. Turn the assembly horizontally in the vice.
8. Press the bearing home on the journal.

Upper bearings

1. Fit the corrugated spring (158) on the stator housing (55)-
2. Fit the upper bearing (154) on the rotor/shaft (172) by pressing on the inner ring.
3. Make sure that the O-ring (159) is fitted in the groove of the stator housing (55).
4. Fit the corrugated spring (158) on the upper bearing (154).
5. Lubricate the groove for the O-rings (37a).
6. Fit and lubricate the O-rings (37a).
7. Make sure that the spring pins (6a) are fitted on the stator housing (55).
8. Fit the rotor assembly to the stator housing (55). The pin on the stator housing (55) must engage with the hole in the oil chamber (155).
9. Fit the screws (188a) to attach the oil chamber (155) to the stator housing (55). Tighten the screws to 20 Nm ± 2.

10.3 Fitting the shaft seal

0.9 to 1.5 kW

1. Check and clean the oil chamber (155).
2. Lubricate the groove for the O-rings (107).
3. Fit and lubricate the two O-rings (107) of the shaft seal.
4. Make sure that the O-ring (102) is fitted inside the bush (103).
5. Cover the shaft end and lubricate the shaft.
6. Fit the bush (103) in the seal ring (104) of shaft seal (105).
7. Fit a new shaft seal (105) using the mounting bush included in the shaft seal kit.

Make sure that the shaft seal parts are concentric. Wrong orientation breaks the seal parts when they are pressed home.

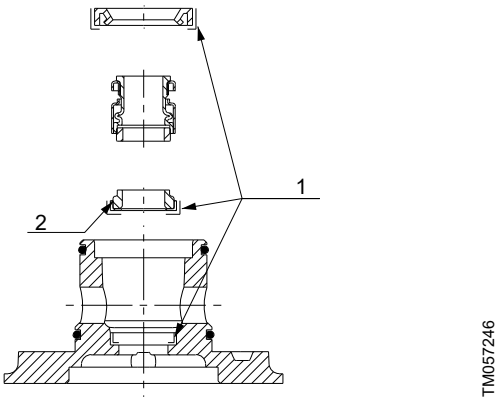

Shaft seal assembly, 0.9 - 1.5 kW

Pos.	Description
1	Lubricate with soapy water only. Do not use oil.
2	No soap or oil between the SiC ring and the rubber seal.

8. Remove the screw (188a) from the shaft end.
9. Fit two screws (188a) in the shaft seal carrier (58).
10. Fit the key (9a) on the shaft (172) and lubricate the surface of the key.

2.6 to 4 kW

1. Lubricate the shaft surface on the point where the seal is fitted.
2. Fit the locking washer (153a).
3. Fit the shaft seal (105a) to the shaft. Make sure that the pin of the shaft seal engages with the shaft groove.

   Make sure that the shaft seal parts are concentric. Wrong orientation breaks the seal parts when they are pressed home.

4. Lubricate the groove for the O-ring (107) on the shaft seal carrier (58).
5. Fit and lubricate the O-ring (107).
6. Fit the shaft seal carrier (58) with screws (188a). Tighten the screws to 20 Nm ± 2.
7. Fit the retaining ring (112a).
8. Fit the key (9a).

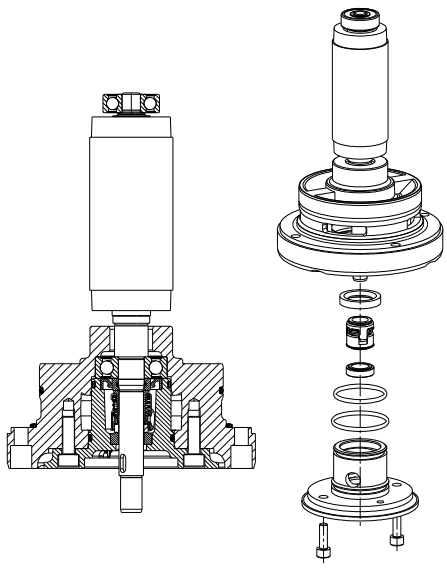

Shaft seal

10.4 Fitting the impeller

CAUTION
Sharp element
Minor or moderate personal injury
- Be careful of the sharp edges of the impeller.

1. Fit the impeller (49).
2. Fit and tighten the adjusting nut (68).

Example:

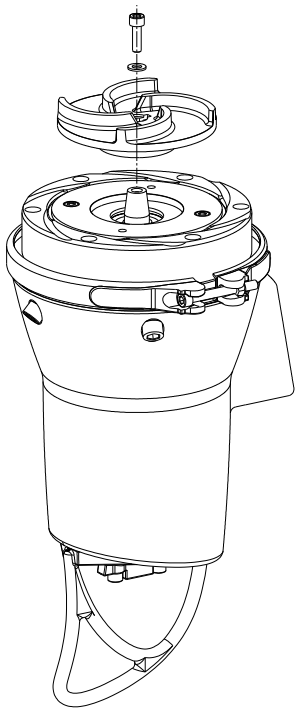

Fitting the impeller DP pumps

10.5 Fitting the pump housing

1. Lift the motor by a hoist.
2. Lubricate the O-ring (37b) with Rocol Sapphire Aqua-Sil, and fit it on the lower seal housing (77).
3. Carefully lower the pump into the pump housing (50).
4. Fit the screws (26) and the adjusting screws (12c).
5.

   The pump housing must engage with the guide pin. The pump outlet must point in the direction of the electronic unit.

6. Now make the adjustment of the impeller clearance.
7. Check that the impeller can rotate freely.
8. After impeller adjustment, place the pump vertically on a stable surface.

Example:

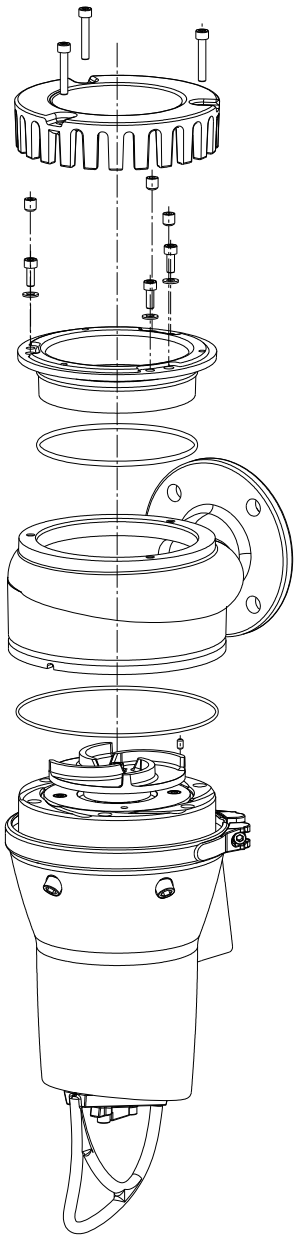

DP pump housing with stand

10.6 Adjusting the impeller clearance

CAUTION
Crushing of hands
Minor or moderate personal injury
- Before inspection, make sure that the motor is switched off and that the mains switch is locked in position 0.

1. Tighten the adjusting nut (68) until the impeller (49) cannot rotate any more.
2. Slacken the adjusting nut (68) by 1/4 turn.

11. Disposing of the product

This product or parts of it must be disposed of in an environmentally sound way.

1. Use the public or private waste collection service.
2. If this is not possible, contact the nearest Grundfos company or service workshop.

The crossed-out wheelie bin symbol on a product means that it must be disposed of separately from household waste. When a product marked with this symbol reaches its end of life, take it to a collection point designated by the local waste disposal authorities. The separate collection and recycling of such products will help protect the environment and human health.

See also end-of-life information at *www.grundfos.com/product-recycling*.

© 2025 Grundfos Holding A/S, all rights reserved.

Trademarks displayed in this material, including but not limited to Grundfos and the Grundfos logo, are registered trademarks owned by The Grundfos Group.

93310212 **04.2025**

ECM: 1421318