PM START, PM PLUS

GRUNDFOS

Table of contents

1. Product introduction 3
PM START 3
PM PLUS 3
Applications 3
Liquids 3
Features 3
Protective features 4
Quick sizing 5
Compatible pumps 5
Installation example 5

2. PM START 6
Product description 6

3. PM PLUS 8
Product description 8

4. Product numbers 10

5. Grundfos Product Center 11

6. Document quality feedback 12

1. Product introduction

TM090444

Grundfos PM START and PM PLUS are compact pressure managers designed to control Grundfos pumps and other water supply pumps in domestic applications, turning a basic pump into a boosting system that provides water on demand.

1.1 PM START

PM START is a basic control solution, suitable for applications that require starting and stopping the pump according to water consumption. It starts the pump when a cut-in pressure of 1.5 or 2.2 bar is reached and keeps the pump running as long as there is sufficient flow. PM START stops the pump in case of water shortage and protects it from dry running. In the event of a temporary power outage, the pressure manager automatically resumes operation once power is restored.

1.2 PM PLUS

PM PLUS is an advanced solution with adjustable start pressure and can be easily customized to your specific application. It features automatic protection that stops the pump in case of water shortage, preventing dry running. In the event of dry running or a power outage, PM PLUS automatically resets itself once water or power supply is restored.

1.3 Applications

Typical applications are water supply systems and rainwater systems in, for example:

- single-family houses
- blocks of flats
- summer houses and holiday cottages
- horticulture and gardening
- agriculture.

The product can be mounted in connection with a tank or directly on a pump.

1.4 Liquids

Clean, thin, non-aggressive and non-explosive liquids without solid particles or fibres that may attack the unit mechanically or chemically.

Examples:

- municipal water
- rainwater.

1.5 Features

The pressure managers offer the following features:

Features	PM START	PM PLUS
Alarm indication	√	√
Adjustable start pressure	-	√
Dry-running protection	√	√
Automatic restart after dry-running	-	√
Integrated non-return valve	√	√
Internal pressure membrane and tank	√	√
Suitable for generator operation	√	√
Pressure gauge, 0-12 bar (174 psi) range	-	√
Dual voltage (115-230 V)	-	√
Anti-jamming function	-	√

1.6 Protective features

1.6.1 Dry-running protection

Both PM START and PM PLUS incorporate dry-running protection to prevent pump damage. The pressure manager monitors the pressure and flow and triggers a dry-running alarm when no pressure and no flow are detected within 8-10 seconds.

Dry-runing protection can be triggered in two situations:

- During priming: Immediately after connection to power and pump start-up
- During normal operation: While the pump is running in service.

1.6.1.1 Dry running during priming

When the pressure manager is connected to the power supply and the pump starts, the dry-running alarm activates if no pressure and no flow are detected within 8-10 seconds.

PM START

- The green indicator light flashes continuously.
- Priming starts when the reset button is pressed and held.
- After successful priming, the pump enters normal operation.

PM PLUS

- The red alarm indicator light flashes continuously.
- Priming starts when the reset button is pressed and held for 5 seconds. The pump restarts and then runs for 5 minutes.
- If priming is successful within this period, the pump automatically switches to normal operation.

1.6.1.2 Dry running during operation

During normal operation, if no pressure and no flow are detected within 8–10 seconds, the dry-running alarm activates. The cause of dry running must be resolved before the pump resumes operation to prevent damage.

1.6.1.3 Auto-reset feature (PM PLUS)

PM PLUS includes an auto-reset function. When dry running is detected, the pump automatically attempts to restart according to the defined schedule (see table below).

Number of attempts	Waiting time after failed attempt	Running time (minutes)
1	1 minute	5
2	30 minutes	5
3	1 hour	5
4	2 hours	5
5	3 hours	5
6	3 hours	5
7	3 hours	5
8	3 hours	5
9	3 hours	5
10	3 hours	5

During automatic restart attempts, the red indicator light remains on and flashes. After the tenth attempt, the red indicator light stays on without flashing.

1.6.2 Anti-blocking feature (PM PLUS)

If the pump is idle for 24 consecutive hours, the product automatically attempts to restart the pump.

1.6.3 Adjustable start pressure (PM PLUS)

PM PLUS provides the option to adjust the cut-in pressure within a range of 1.5 to 3 bar, allowing customization to suit specific requirements.

For optimal performance, the cut-in pressure is typically set approximately 0.2 bar (3 psi) above the static pressure of the installation.

1.7 Quick sizing

Use the table below to determine the appropriate cut-in pressure based on your building's requirements..

Product type	Number of floors	Buidling height	Cut-in pressure	Min. pump pressure	Max. pump pressure
PM START, PM PLUS	5	15 m (49 ft)	1.5 bar (22 psi)	3.0 bar (44 psi)	10.0 bar (145 psi)
PM PLUS	6	25 m (82 ft)	2 bar (29 psi)	3.5 bar (50 psi)	10.0 bar (145 psi)
PM START, PM PLUS	7	22 m (72 ft)	2.2 bar (32 psi)	3.5 bar (51 psi)	10.0 bar (145 psi)
PM PLUS	8	30 m (98 ft)	2.5 bar (36 psi)	4 bar (58 psi)	12 bar (174 psi)
PM PLUS	10	35 m (114 ft)	3.0 bar (44 psi)	4.5 bar (65 psi)	12.0 bar (174 psi)

1.8 Compatible pumps

The following pump types are suitable for use with this product:

- multistage centrifugal pumps (CMB and CMB-SP)
- jet boosters (JP boosters)
- submersible pumps (SB, SBA)
- peripheral pumps.

1.9 Installation example

The pressure manager can be installed in systems with or without a pressure tank. It can be fitted directly to the outlet port of the pump or between the pump and the first draw-off point.

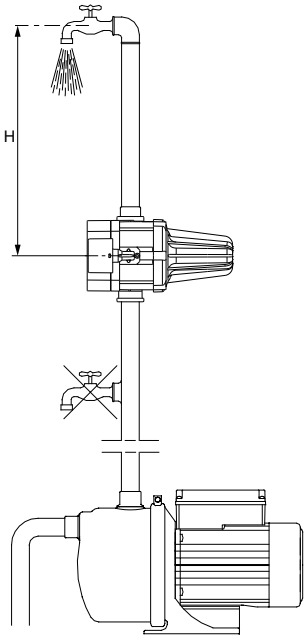

TM089107

2. PM START

2.1 Product description

TM083957

Grundfos PM START pressure manager is designed for automatic start/stop control of Grundfos and other water supply pumps.

PM START is a basic control solution suitable for applications where start and stop operation of the pump according to consumption is needed.

PM START starts the pump when a start cut-in pressure of 1.5 or 2.2 bar is reached and keeps the pump running as long as there is sufficient flow. PM START stops the pump in case of water shortage and protects it from dry running.

In case of temporary power outage, the pressure manager automatically resumes operation once power has been restored.

2.1.1 Applications

Typical applications are water supply systems and rainwater systems in, for example:

- single-family houses
- blocks of flats
- summer houses and holiday cottages
- horticulture and gardening
- agriculture.

The product can be mounted in connection with a tank or directly on a pump.

2.1.2 Liquids

Clean, thin, non-aggressive and non-explosive liquids without solid particles or fibres that may attack the unit mechanically or chemically.

Examples:

- municipal water
- rainwater.

2.1.3 Features

PM START offers the following features:

- Alarm indication
- dry-running protection
- integrated non-return valve
- internal pressure membrane and tank
- suitable for generator operation.

2.1.4 Operating panel, PM START

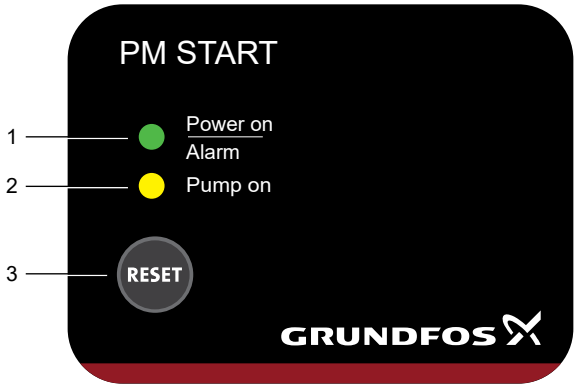

TM083904

Pos.	Description	Function
1	**Power on**	The green indicator light is permanently on when the power is on.
	Alarm	The green indicator light flashes when there is an operating fault in the pump.
2	**Pump on**	The yellow indicator light is on when the pump is in operation.
3	**RESET**	The button is used for resetting fault indications.

2.1.5 Approvals and markings

Safety approvals			
CE	TM075405	TÜVRheinland CERTIFIED	
Drinking water approvals			
CLASSIFIED c UL us WATER QUALITY Drinking water system component NSF/ANSI 61 NSF/ANSI 372	TM076608	ACS	TM074613

2.1.6 Technical data

Supply voltage	1 × 230 VAC, ± 10 %, 50/60 Hz
	1 × 115 VAC, ± 10 %, 50/60 Hz
Ambient temperature	0-50 °C (122 °F)
Liquid temperature	0-60 °C (140 °F)
Max. current	10 A
Max. power at 115 VAC	1.1 kW (1.5 hp)
Max. power at 230 VAC	1.5 kW (2 hp)
Enclosure class	IP 65
Max. operating pressure	10 bar (145 psi)
Min. flow rate	≈ 1 l/min (0.26 gpm)
Pumped liquids	Clean water
Connection type	G1/NPT

2.1.7 Quick sizing

The below sizing table can help you determine which cut-in pressure suits your application requirements.

Cut-in pressure	1.5 bar [22 psi]	2.2 bar [32 psi]
Number of floor	5	7
Building height (H)	15 m (49.2 ft)	22 m (72.2 ft)
Min. pump pressure	3 bar [44 psi]	3.5 bar [50 psi]
Max. pump pressure	10 bar [145 psi]	10 bar [145 psi]

2.1.8 Installation example

The pressure manager can be installed in systems with or without a pressure tank. It can be fitted directly to the outlet port of the pump or between the pump and the first draw-off point.

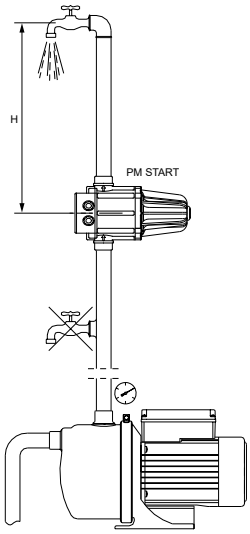

TM084061

PM START	1.5 bar [22 psi]	2.2 bar [32 psi]
Max. height (H) between the PM START unit and the highest tapping point	15 m (49.2 ft)	22 m (72.2 ft)

2.1.9 Dimensions

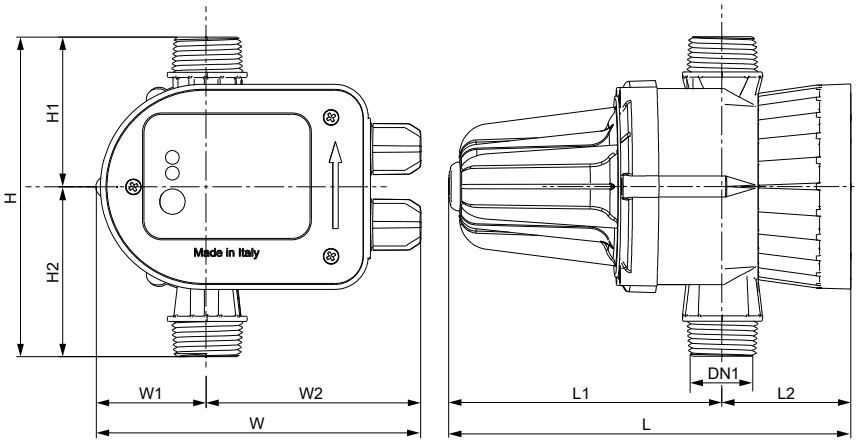

TM083814

Product	Dimensions									DN [inch]
	L mm [inch]	L1 mm [inch]	L2 mm [inch]	W mm [inch]	W1 mm [inch]	W2 mm [inch]	H mm [inch]	H1 mm [inch]	H2 mm [inch]	
PM START	192 [7.6]	131 [5.2]	61 [2.4]	162 [6.4]	53 [2.1]	109 [4.3]	150 [5.9]	70 [2.8]	80 [3.1]	1

3. PM PLUS

3.1 Product description

Grundfos PM PLUS is a pressure manager designed for automatic start/stop control of Grundfos or other pumps for water supply in domestic applications. With adjustable start pressure, PM PLUS can easily be customised to your specific application. PM PLUS features automatic protection that stops the pump in case of water shortage, preventing dry running. In case of temporary power outage, PM PLUS automatically resets itself once power is restored.

3.1.1 Applications

Typical applications are water supply systems and rainwater systems in, for example:

- single-family houses
- blocks of flats
- summer houses and holiday cottages
- horticulture and gardening
- agriculture.

The product can be mounted in connection with a tank or directly on a pump.

3.1.2 Liquids

Clean, thin, non-aggressive and non-explosive liquids without solid particles or fibres that may attack the unit mechanically or chemically.

Examples:

- municipal water
- rainwater.

3.1.3 Features

The product features the following:

- adjustable start pressure
- dry-running protection and automatic restart
- integrated non-return valve
- internal pressure membrane and tank
- suitable for generator operation
- pressure gauge, 0-12 bar (174 psi) range
- dual voltage (115-230 V)
- anti-jamming function.

3.1.4 Operating panel

The product offers a user-friendly interface with a **Reset** button and indicator lights.

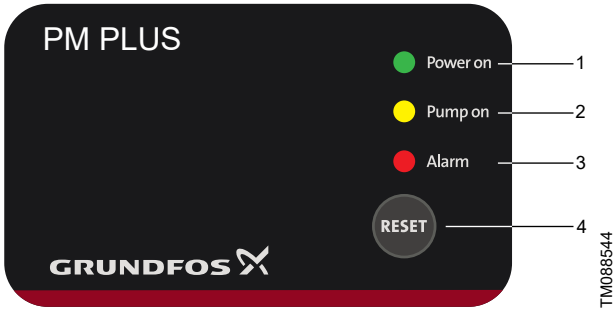

Pos.	Description	Function
1	**Power on**	The green indicator light is permanently on when the power is on.
2	**Pump on**	The yellow indicator light is on when the pump is in operation.
3	**Alarm**	The red indicator light flashes in case of dry running.
4	**Reset**	The button is used for resetting fault indications.

3.1.5 Approvals and markings

Safety approvals				
CE	TM075405	TÜVRheinland CERTIFIED	c UL us	
Drinking water approvals				
CLASSIFIED c UL us WATER QUALITY Drinking water system component NSF/ANSI 61 NSF/ANSI 372	TM076608	ACS	TM074613	

3.1.6 Technical data

Supply voltage	115/230 VAC, ± 10 %, 50/60 Hz
Ambient temperature	0-50 °C (122 °F)
Liquid temperature	0-60 °C (140 °F)
Max. current	10 A
Max. power at 115 VAC	0.75 kW (1 hp)
Max. power at 230 VAC	1.5 kW (2 hp)
Enclosure class	IP 65
Max. operating pressure	12 bar (174 psi)
Min. flow rate	≈ 1 l/min (0.26 gpm)
Pumped liquids	Clean water
Connection type	G1/NPT

3.1.7 Quick sizing of PM PLUS

The below sizing table can help you determine which cut-in pressure suits your application requirements.

Cut-in pressure	1.5 bar (22 psi)	2 bar (29 psi)	2.5 bar (36 psi)	3 bar (44 psi)
Number of floors	5	6	8	10
Building height (H)	15 m (49 ft)	25 m (82 ft)	30 m (98.4 ft)	35 m (114.8 ft)
Min. pump pressure	3 (44 psi)	3.5 (51 psi)	4 (58 psi)	4.5 (65 psi)

3.1.8 Installation example

The pressure manager can be installed in systems with or without a pressure tank. It can be fitted directly to the outlet port of the pump or between the pump and the first draw-off point.

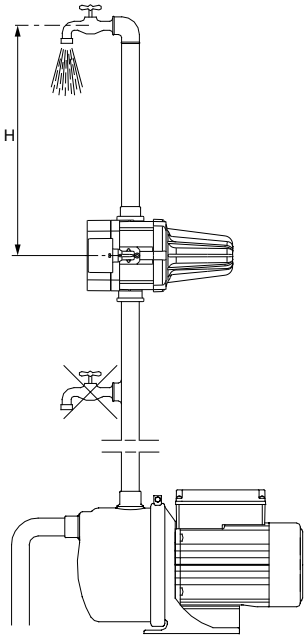

TM089107

3.1.9 Dimensional drawing

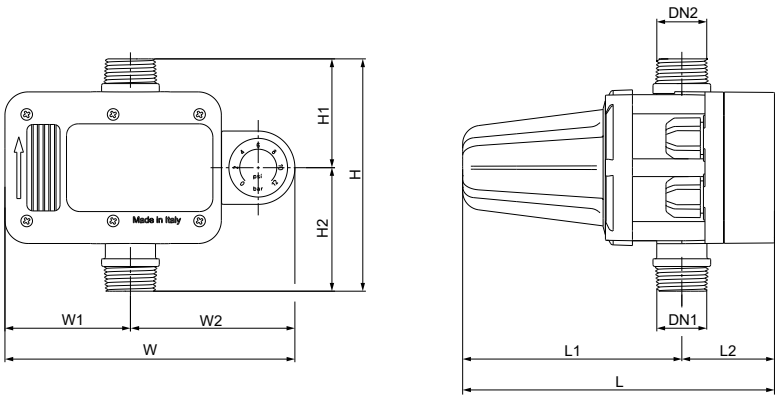

TM088432

Product	Dimensions L mm [inch]	L1 mm [inch]	L2 mm [inch]	W mm [inch]	W1 mm [inch]	W2 mm [inch]	H mm [inch]	H1 mm [inch]	H2 mm [inch]	DN1, DN2 [inch]
PM PLUS	200 [7.9]	140 [5.5]	60 [2.4]	188 [7.4]	81 [3.2]	107 [4.2]	150 [5.9]	70 [2.8]	80 [3.1]	G1

4. Product numbers

Pump type	Plug type	Frequency	Supply voltage	Product number
PM START 1.5	No plug	50/60 Hz	1×230 V	92867630
PM START 1.5	SCHUKO	50/60 Hz	1×230 V	93225650
PM START 1.5	No plug	50/60 Hz	1×230 V	93159123
PM START 1.5	No plug	60 Hz	1×115 V	93212564
PM START 1.5	No plug	60 Hz	1×115 V	93225671
PM START 1.5	No plug	50/60 Hz	1×230 V	93212922
PM START 1.5	AUS	50/60 Hz	1×230 V	93212932
PM START 1.5	SCHUKO	50/60 Hz	1×230 V	93212939
PM START 2.2	No plug	50/60 Hz	1×230 V	92867635
PM START 2.2	SCHUKO	50/60 Hz	1×230 V	93225672
PM START 2.2	No plug	50/60 Hz	1×230 V	93159128
PM START 2.2	No plug	60 Hz	1×115 V	93225677
PM START 2.2	No plug	60 Hz	1×115 V	93225675
PM START 2.2	No plug	50/60 Hz	1×230 V	93212926
PM PLUS	SCHUKO	50/60 Hz	1×115-230 V	93264954
PM PLUS	No plug	50/60 Hz	1×115-230 V	93264956
PM PLUS	No plug	50/60 Hz	1×115-230 V	93264958
PM PLUS	No plug	50/60 Hz	1×115-230 V	93297995
PM PLUS	No plug	50/60 Hz	1×115-230 V	93297997
PM PLUS	No plug	50/60 Hz	1×115-230 V	93264973
PM PLUS	No plug	50/60 Hz	1×115-230 V	93264971

5. Grundfos Product Center

Online search and sizing tool to help you make the right choice.
From the international view, you can select your specific country to view the product range available to you.
International view: *http://product-selection.grundfos.com*

All the information you need in one place

Performance curves, technical specifications, pictures, dimensional drawings, motor curves, wiring diagrams, spare parts, service kits, 3D drawings, documents, system parts. The Product Center displays any recent and saved items - including complete projects - right on the main page.

Downloads

On the product pages, you can download installation and operating instructions, data booklets, service instructions, etc., in PDF format.

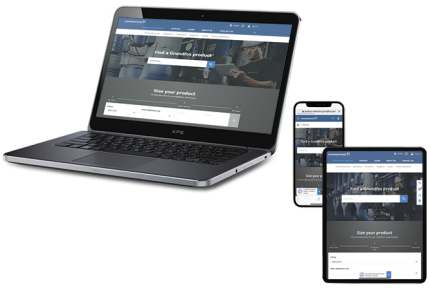

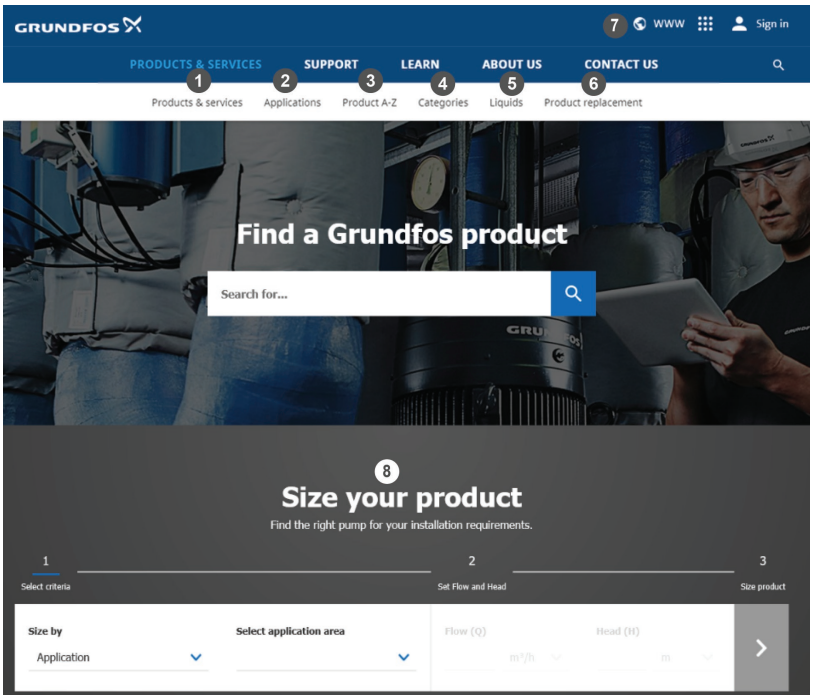

TM072383-1

When you select your country, you will see the menus below. Note that some menus may not be available depending on the country.
Example: *https://product-selection.grundfos.com/uk*

Pos.	Description
1	**Products & services** enables you to find products and documents by typing a product number or name into the search field.
2	**Applications** enables you to choose an application to see how Grundfos can help you design and optimise your system.
3	**Products A-Z** enables you to look through a list of all the Grundfos products.
4	**Categories** enables you to look for a product category.
5	**Liquids** enables you to find pumps designed for aggressive, flammable or other special liquids.
6	**Product replacement** enables you to find a suitable replacement.
7	**WWW** enables you to select the country, which changes the language, the available product range and the structure of the website.
8	**Sizing** enables you to size a product based on your application and operating conditions.

6. Document quality feedback

To provide feedback about this document, scan the QR-code using your phone's camera or a QR code app.

Click here to submit your feedback

Argentina
Bombas GRUNDFOS de Argentina S.A.
Ruta Panamericana km. 37.500industin
1619 - Garín Pcia. de B.A.
Tel.: +54-3327 414 444
Fax: +54-3327 45 3190

Australia
GRUNDFOS Pumps Pty. Ltd.
P.O. Box 2040
Regency Park
South Australia 5942
Tel.: +61-8-8461-4611
Fax: +61-8-8340-0155

Austria
GRUNDFOS Pumpen Vertrieb Ges.m.b.H.
Grundfosstraße 2
A-5082 Grödig/Salzburg
Tel.: +43-6246-883-0
Fax: +43-6246-883-30

Belgium
N.V. GRUNDFOS Bellux S.A.
Boomsesteenweg 81-83
B-2630 Aartselaar
Tel.: +32-3-870 7300
Fax: +32-3-870 7301

Bosnia and Herzegovina
GRUNDFOS Sarajevo
Zmaja od Bosne 7-7A
BiH-71000 Sarajevo
Tel.: +387 33 592 480
Fax: +387 33 590 465
www.ba.grundfos.com
E-mail: grundfos@bih.net.ba

Brazil
BOMBAS GRUNDFOS DO BRASIL
Av. Humberto de Alencar Castelo Branco, 630
CEP 09850 - 300
São Bernardo do Campo - SP
Tel.: +55-11 4393 5533
Fax: +55-11 4343 5015

Bulgaria
Grundfos Bulgaria EOOD
Slatina District
Iztochna Tangenta street no. 100
BG - 1592 Sofia
Tel.: +359 2 49 22 200
Fax: +359 2 49 22 201
E-mail: bulgaria@grundfos.bg

Canada
GRUNDFOS Canada inc.
2941 Brighton Road
Oakville, Ontario
L6H 6C9
Tel.: +1-905 829 9533
Fax: +1-905 829 9512

China
GRUNDFOS Pumps (Shanghai) Co. Ltd.
10F The Hub, No. 33 Suhong Road
Minhang District
Shanghai 201106 PRC
Tel.: +86 21 612 252 22
Fax: +86 21 612 253 33

Colombia
GRUNDFOS Colombia S.A.S.
Km 1.5 vía Siberia-Cota Conj. Potrero Chico,
Parque Empresarial Arcos de Cota Bod. 1A.
Cota, Cundinamarca
Tel.: +57(1)-2913444
Fax: +57(1)-8764586

Croatia
GRUNDFOS CROATIA d.o.o.
Buzinski prilaz 38, Buzin
HR-10010 Zagreb
Tel.: +385 1 6595 400
Fax: +385 1 6595 499
www.hr.grundfos.com

Czech Republic
GRUNDFOS Sales Czechia and Slovakia s.r.o.
Čajkovského 21
779 00 Olomouc
Tel.: +420-585-716 111

Denmark
GRUNDFOS DK A/S
Martin Bachs Vej 3
DK-8850 Bjerringbro
Tel.: +45-87 50 50 50
www.grundfos.com/DK

Estonia
SIA Grundfos Pumps Baltic Eesti filiaal
Priisle tee 10
13914 Tallinn
Tel.: + 372 606 1690
E-mail: estonia@sales.grundfos.com

Finland
OY GRUNDFOS Pumput AB
Trukkikuja 1
FI-01360 Vantaa
Tel.: +358-(0) 207 889 500

France
Pompes GRUNDFOS Distribution S.A.
Parc d'Activités de Chesnes
57, rue de Malacombe
F-38290 St. Quentin Fallavier (Lyon)
Tel.: +33-4 74 82 15 15
Fax: +33-4 74 94 10 51

Germany
GRUNDFOS GMBH
Schlüterstr. 33
40699 Erkrath
Tel.: +49-(0) 211 929 69-0
Fax: +49-(0) 211 929 69-3799
E-mail: infoservice@grundfos.de
Service in Deutschland:
kundendienst@grundfos.de

Greece
GRUNDFOS Hellas A.E.B.E.
20th km. Athinon-Markopoulou Av.
P.O. Box 71
GR-19002 Peania
Tel.: +0030-210-66 83 400
Fax: +0030-210-66 46 273

Hong Kong
GRUNDFOS Pumps (Hong Kong) Ltd.
Unit 1, Ground floor, Siu Wai industrial Centre
29-33 Wing Hong Street & 68 King Lam Street, Cheung Sha Wan
Kowloon
Tel.: +852-27861706 / 27861741
Fax: +852-27858664

Hungary
GRUNDFOS South East Europe Kft.
Tópark u. 8
H-2045 Törökbálint
Tel.: +36-23 511 110
Fax: +36-23 511 111

India
GRUNDFOS Pumps India Private Limited
118 Old Mahabalipuram Road
Thoraipakkam
Chennai 600 097
Tel.: +91-44 2496 6800

Indonesia
PT GRUNDFOS Pompa
Graha intirub Lt. 2 & 3
Jln. Cililitan Besar No.454. Makasar, Jakarta Timur
ID-Jakarta 13650
Tel.: +62 21-469-51900
Fax: +62 21-460 6910 / 460 6901

Ireland
GRUNDFOS (Ireland) Ltd.
Unit A, Merrywell Business Park
Ballymount Road Lower
Dublin 12
Tel.: +353-1-4089 800
Fax: +353-1-4089 830

Italy
GRUNDFOS Pompe Italia S.r.l.
Via Gran Sasso 4
I-20060 Truccazzano (Milano)
Tel.: +39-02-95838112
Fax: +39-02-95309290 / 95838461

Japan
GRUNDFOS Pumps K.K.
1-2-3, Shin-Miyakoda, Kita-ku
Hamamatsu
431-2103 Japan
Tel.: +81 53 428 4760
Fax: +81 53 428 5005

Kazakhstan
Grundfos Kazakhstan LLP
7' Kyz-Zhibek Str., Kok-Tobe micr.
KZ-050020 Almaty Kazakhstan
Tel.: +7 (727) 227-98-55/56

Korea
GRUNDFOS Pumps Korea Ltd.
6th Floor, Aju Building 679-5
Yeoksam-dong, Kangnam-ku, 135-916
Seoul, Korea
Tel.: +82-2-5317 600
Fax: +82-2-5633 725

Latvia
GRUNDFOS Pumps Baltic SIA
Gunāra Astras iela 8B
LV-1082, Rīga,
Tel.: + 371 671 49640
E-mail: latvia@sales.grundfos.com

Lithuania
SIA „GRUNDFOS PUMPS BALTIC" Lietuvos filialas
Smolensko g. 6
LT-03201 Vilnius
Tel.: + 370 5 239 5430
E-mail: lithuania@sales.grundfos.com

Malaysia
GRUNDFOS Pumps Sdn. Bhd.
7 Jalan Peguam U1/25
Glenmarie industrial Park
40150 Shah Alam, Selangor
Tel.: +60-3-5569 2922
Fax: +60-3-5569 2866

Mexico
Bombas GRUNDFOS de México S.A. de C.V.
Boulevard TLC No. 15
Parque industrial Stiva Aeropuerto
Apodaca, N.L. 66600
Tel.: +52-81-8144 4000
Fax: +52-81-8144 4010

Netherlands
GRUNDFOS Netherlands
Veluwezoom 35
1326 AE Almere
Postbus 22015
1302 CA ALMERE
Tel.: +31-88-478 6336
Fax: +31-88-478 6332
E-mail: info_gnl@grundfos.com

New Zealand
GRUNDFOS Pumps NZ Ltd.
17 Beatrice Tinsley Crescent
North Harbour Industrial Estate
Albany, Auckland
Tel.: +64-9-415 3240
Fax: +64-9-415 3250

Norway
GRUNDFOS Pumper A/S
Strømsveien 344
Postboks 235, Leirdal
N-1011 Oslo
Tel.: +47-22 90 47 00
Fax: +47-22 32 21 50

Poland
GRUNDFOS Pompy Sp. z o.o.
ul. Klonowa 23
Baranowo k. Poznania
PL-62-081 Przeźmierowo
Tel.: (+48-61) 650 13 00
Fax: (+48-61) 650 13 50

Portugal
Bombas GRUNDFOS Portugal, S.A.
Rua Calvet de Magalhães, 241
Apartado 1079
P-2770-153 Paço de Arcos
Tel.: +351-21-440 76 00
Fax: +351-21-440 76 90

Romania
GRUNDFOS Pompe România SRL
S-PARK BUSINESS CENTER, Clădirea A2, etaj 2
Str. Tipografilor, Nr. 11-15, Sector 1, Cod 013714
Bucuresti, Romania
Tel.: 004 021 2004 100
E-mail: romania@grundfos.ro

Serbia
Grundfos Srbija d.o.o.
Omladinskih brigada 90b
11070 Novi Beograd
Tel.: +381 11 2258 740
Fax: +381 11 2281 769
www.rs.grundfos.com

Singapore
GRUNDFOS (Singapore) Pte. Ltd.
25 Jalan Tukang
Singapore 619264
Tel.: +65-6681 9688
Faxax: +65-6681 9689

Slovakia
GRUNDFOS s.r.o.
Prievozská 4D 821 09 BRATISLAVA
Tel.: +421 2 5020 1426
sk.grundfos.com

Slovenia
GRUNDFOS LJUBLJANA, d.o.o.
Leskoškova 9e, 1122 Ljubljana
Tel.: +386 (0) 1 568 06 10
Fax: +386 (0)1 568 06 19
E-mail: tehnika-si@grundfos.com

South Africa
GRUNDFOS (PTY) LTD
16 Lascelles Drive, Meadowbrook Estate
1609 Germiston, Johannesburg
Tel.: (+27) 10 248 6000
Fax: (+27) 10 248 6002
E-mail: lgradidge@grundfos.com

Spain
Bombas GRUNDFOS España S.A.
Camino de la Fuentecilla, s/n
E-28110 Algete (Madrid)
Tel.: +34-91-848 8800
Fax: +34-91-628 0465

Sweden
GRUNDFOS AB
Box 333 (Lunnagårdsgatan 6)
431 24 Mölndal
Tel.: +46 31 332 23 000
Fax: +46 31 331 94 60

Switzerland
GRUNDFOS Pumpen AG
Bruggacherstrasse 10
CH-8117 Fällanden/ZH
Tel.: +41-44-806 8111
Fax: +41-44-806 8115

Taiwan
GRUNDFOS Pumps (Taiwan) Ltd.
7 Floor, 219 Min-Chuan Road
Taichung, Taiwan, R.O.C.
Tel.: +886-4-2305 0868
Fax: +886-4-2305 0878

Thailand
GRUNDFOS (Thailand) Ltd.
92 Chaloem Phrakiat Rama 9 Road
Dokmai, Pravej, Bangkok 10250
Tel.: +66-2-725 8999
Fax: +66-2-725 8998

Turkey
GRUNDFOS POMPA San. ve Tic. Ltd. Sti.
Gebze Organize Sanayi Bölgesi
Ihsan dede Caddesi
2. yol 200. Sokak No. 204
41490 Gebze/ Kocaeli
Tel.: +90 - 262-679 7979
Fax: +90 - 262-679 7905
E-mail: satis@grundfos.com

Ukraine
ТОВ "ГРУНДФОС УКРАЇНА"
Бізнес Центр Європа
Столичне шосе, 103
м. Київ, 03131, Україна
Tel.: (+38 044) 237 04 00
Fax: (+38 044) 237 04 01
E-mail: ukraine@grundfos.com

United Arab Emirates
GRUNDFOS Gulf Distribution
P.O. Box 16768
Jebel Ali Free Zone, Dubai
Tel.: +971 4 8815 166
Fax: +971 4 8815 136

United Kingdom
GRUNDFOS Pumps Ltd.
Grovebury Road
Leighton Buzzard/Beds. LU7 4TL
Tel.: +44-1525-850000
Fax: +44-1525-850011

U.S.A.
Global Headquarters for WU
856 Koomey Road
Brookshire, Texas 77423 USA
Phone: +1-630-236-5500

Uzbekistan
Grundfos Tashkent, Uzbekistan
The Representative Office of Grundfos Kazakhstan in Uzbekistan
38a, Oybek street, Tashkent
Tel.: (+998) 71 150 3290 / 71 150 3291
Fax: (+998) 71 150 3292

Trademarks displayed in this material, including but not limited to Grundfos and the Grundfos logo, are registered trademarks owned by The Grundfos Group. © 2025 Grundfos Holding A/S, all rights reserved.

93535792 **12.2025**
ECM: 1436890

GRUNDFOS Holding A/S
Poul Due Jensens Vej 7
DK-8850 Bjerringbro
Tel: +45 87 50 14 00
www.grundfos.com

GRUNDFOS