LS, LSV

Service Kit Catalogue
New developed models 2025

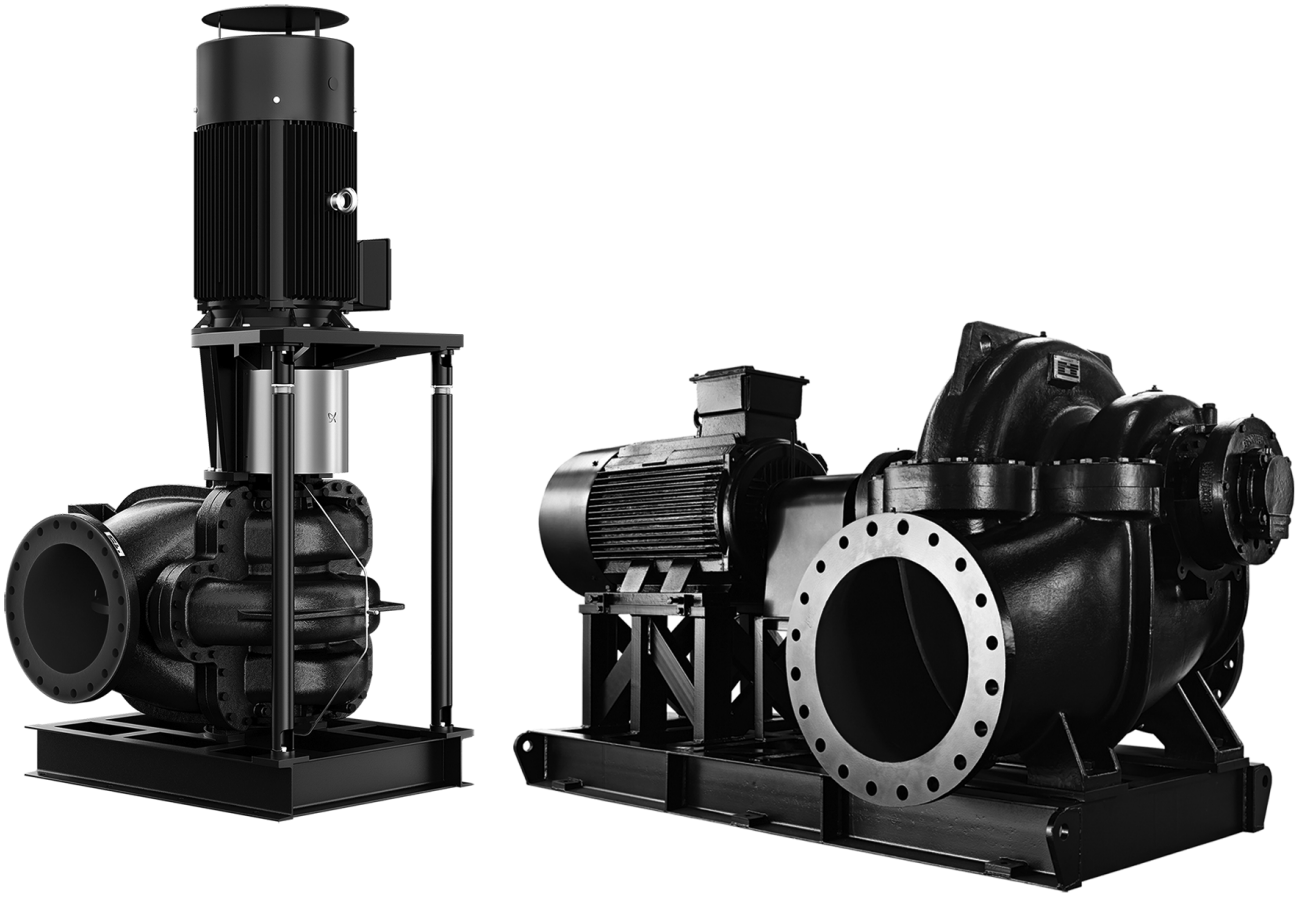

GRUNDFOS

Table of contents

1. How to search correct service parts 3

2. Type key 4
Codes for stuffing box 6
Codes for mechanical shaft seal 6
Pump configuration 6

3. Service kits and spares 7
Kit - Bearing NDE (Non Drive End) 7
Kit - Bearing DE (Drive End). 8
Kit - Gasket 9
Kit - Fastener 10
Kit - Impeller. 11
Kit - Shaft. 14
Kit - Stuffing box packing (only for LS) 17
Kit - Stuffing box gland (only for LS) 17
Kit - Shaft sleeve 17
Kit - Shaft seal NDE (Non Drive End). 21
Kit - Shaft seal DE (Drive End) 22
Spare - Shaft seal 25
Kit/spare - Wear ring 26
Kit - Sleeve bearing (only for LSV) 28
Spare - O-ring for sleeve bearing (only for LSV) . . 29
Kit - Standard coupling 29
Kit/spare - Spacer coupling 33
Kit - Coupling guard 35
Pump housing plugs 37

4. Document quality feedback. 38

1. How to search correct service parts

To search correct service parts, the information on the pump nameplate is vital. The pump nameplate contains all data required for this.

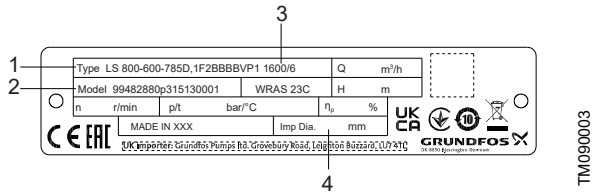

Nameplate

Pos.	Description	
1	Type	
2	Model	
	99482880	Product number
	p3	Production site
	1513	Production year and week
	0001	Serial number
3	1600/6	Power [kW] / Pole
4	Trim impeller size [mm]	

These data above should be referenced whenever any replacement kit or spare is ordered.

When ordering replacement impellers, additional information like duty point and trim impeller size (4) are required.

The pump models in this manual are unique to LS. If you are unable to find the pump models in this service kit catalogue, please scan the QR code to check another service kit catalogue.

Click here to check another service kit catalogue.

2. Type key

Example: LS(V)125-100-305X,(W) 1F1DS BBQE 1											
Pos.	1	2	3	4	5	6	7	8	9	10	11
Example	LS(V)	125	-100	-305x	,(W)	1	F1	D	S	BBQE	1

Pos.	Code	Explanation
1	LS(V)	**Type range** LS: Horizontal version LSV: Vertical version
2	125	**Nominal diameter of inlet port (DN)**
3	-100	**Nominal diameter of outlet port (DN)**
4	-305x	**Nominal impeller diameter [mm]** If suffix "x" is used, the impeller or construction design is different, e.g. A, B, C,...Z. If suffix "x2" is used, the impeller is a double-stage impeller.
5	,(W)	**Drinking water approval (optional)** ACS or WARS certified pump
6	1	**Pump variant** 1. Grease-lubrication For LS, pump with motor, common base frame and non-spacer coupling. For LSV, pump with motor, base frame, motor stool and non-spacer coupling.
		2. Grease-lubrication For LS, bare shaft pump with common base frame, non-spacer coupling. For LSV, bare shaft pump with base frame, motor stool and non-spacer coupling.
		3. Grease-lubrication For LS, bare shaft pump. For LSV, bare shaft pump with base frame.
		4: Grease-lubrication For LS, pump with motor, separated base frame and spacer coupling. For LSV, pump with motor, base frame, motor stool and spacer coupling.
		5: Grease-lubrication For LS, pump with separated base frame and spacer coupling. For LSV, bare shaft pump with base frame, motor stool and spacer coupling.
		6: Oil-lubrication LS pump with motor, common base frame and non-spacer coupling
		7: Oil-lubrication LS bare shaft pump with common base frame and non-spacer coupling.
		8: Oil-lubrication LS bare shaft pump
		9: Oil-lubrication LS pump with motor, separated base frame and spacer coupling.
		A: Oil-lubrication LS bare shaft pump with separated base frame and spacer coupling.
		X: Special variant
7	F1	**Pipe connection** F1: 10 bar, DIN PN 10 F2: 16 bar, DIN PN 16 F3: 25 bar, DIN PN 25 XX: Special flange G1: 175PSI(12 bar), ANSI125LB/150LB G2: 250PSI(17.2 bar), ANSI250LB/300LB G3: 400PSI(27.6 bar), ANSI250LB/300LB
8	D	**Code for shaft and sleeve materials** D: SS420 and no sleeve E: SS304 and no sleeve J: SS316 and no sleeve L: Duplex stainless steel and no sleeve X: Special B: SS420 and bronze A: SS420 and SS304 C: SS420 and SS316 K: Duplex stainless steel and duplex stainless steel Q: Alloy steel and no sleeve M: Alloy steel and bronze N: Alloy steel and SS304

Pos.	Code	Explanation
9	S	**Code for pump casing and impeller materials** B: Cast iron and bronze S: Cast iron and SS304 C: Cast iron and SS316 D: Cast iron and duplex stainless steel U: SS304 and SS304 K: Duplex stainless steel and duplex stainless steel X: Special A: Ductile iron and bronze Q: Ductile iron and SS304 G: Ductile iron and SS316 H: Ductile iron and duplex stainless steel J: SS316 and SS316 E: Cast steel and SS304 F: Cast steel and SS316
10	BBQE	**Code for shaft seals or stuffing box** BAQE: Rubber bellows unbalance seal, carbon [1], SiC, EPDM AAQE: O-ring unbalance seal, carbon [1], SiC, EPDM DAQE: O-ring balance seal, carbon [1], SiC, EPDM SAQE: Rubber bellows balance seal, carbon [1], SiC, EPDM BBQE: Rubber bellows unbalance seal, carbon, SiC, EPDM ABQE: O-ring unbalance seal, carbon, SiC, EPDM DBQE: O-ring balance seal, carbon, SiC, EPDM SBQE: Rubber bellows balance seal, carbon, SiC, EPDM BQQE: Rubber bellows unbalance seal, SiC, SiC, EPDM AQQE: O-ring unbalance seal, SiC, SiC, EPDM DQQE: O-ring balance seal, SiC, SiC, EPDM SQQE: Rubber bellows balance seal, SiC, SiC, EPDM BBVP: Rubber bellows seal, carbon, aluminium oxide, nitrile rubber SNEK: Stuffing box with synthetic polymer packing rings, uncooled, with internal barrier fluid BAQV: Rubber bellows unbalance seal, carbon [1], SiC, FKM AAQV: O-ring unbalance seal, carbon [1], SiC, FKM DAQV: O-ring balance seal, carbon [1], SiC, FKM SAQV: Rubber bellows balance seal, carbon [1], SiC, FKM BBQV: Rubber bellows unbalance seal, carbon, SiC, FKM ABQV: O-ring unbalance seal, carbon, SiC, FKM DBQV: O-ring balance seal, carbon, SiC, FKM SBQV: Rubber bellows balance seal, carbon, SiC, FKM BQQV: Rubber bellows unbalance seal, SiC, SiC, FKM AQQV: O-ring unbalance seal, SiC, SiC, FKM DQQV: O-ring balance seal, SiC, SiC, FKM SQQV: Rubber bellows balance seal, SiC, SiC, FKM
11	1	**Direction of rotation** (Pump direction of rotation as seen from motor end) 1 Clockwise 2 Counterclockwise

[1] Antimony, not approved for potable water.

The example shown is an LS 125-100-305F, standard type with standard coupling, DIN PN 10 flange, cast iron pump casing with SS304 impeller, BBQE mechanical shaft seal and clockwise direction of rotation.

Related information

3.5 Kit - Impeller
3.6 Kit - Shaft
3.10 Kit - Shaft seal NDE (Non Drive End)
3.11 Kit - Shaft seal DE (Drive End)

2.1 Codes for stuffing box

LS pumps are available with the stuffing box type SNEK.

The positions (1) - (4) cover information about the stuffing box:

Pos.	Code	Short description of stuffing box
(1)	S	Stuffing box with packing rings
Pos.	**Code**	**Cooling method**
(2)	N	Uncooled stuffing box
Pos.	**Code**	**Barrier liquid**
(3)	E	With internal barrier liquid
(4)	K	PTFE Polytetrafluoroethylene packing rings, NBR O-ring in the pump.

2.2 Codes for mechanical shaft seal

Positions (1) - (4) cover four pieces of information about the mechanical shaft seal:

Example

Code	Explanation
(1)	Grundfos type designation
(2)	Material, rotating seal face
(3)	Material, stationary seat
(4)	Material, secondary seal and other composite and rubber parts

The following table explains positions (1), (2), (3) and (4).

Pos.	Type	Short description of seal
(1)	A	O-ring seal, unbalanced
	B	Rubber bellows seal, unbalanced
	D	Balanced O-ring seal (with the spring on the atmospheric side (protected from media) and with the spring in the media)
	S	Rubber bellows seal, balanced
	H	Cartridge seal, balanced
Pos.	**Type**	**Material**
(2) and (3)	A	Carbon, metal-impregnated (antimony, not approved for potable water)
	B	Carbon, resin-impregnated (approved for potable water)
	Q	Silicon carbide
	U	Tungsten carbide
	V	Aluminium oxide
(4)	E	EPDM
	P	Nitrile rubber (NBR)
	V	FKM (Viton®)

Grundfos can offer other types of mechanical shaft seals, please contact Grundfos.

2.3 Pump configuration

	Standard configuration	Optional configuration
Pump casing	Cast iron	Ductile cast iron Stainless steel
Impeller	Stainless steel	Bronze Duplex stainless steel
Shaft	Stainless steel	
Sleeve	N/A	Stainless steel Duplex stainless steel
Wear ring	Brass	Cast iron Stainless steel Bronze
Shaft seal	Mechanical shaft seal	Stuffing box
Low voltage motor efficiency class (up to 560 kW)	IE4	IE3, IE5
High voltage motor	6 kV, 10 kV	-
Pump direction of rotation	Clockwise (CW) (seen from shaft end)	Counterclockwise (CCW) (seen from shaft end)

Service parts described in this service kit catalogue apply to products with standard configuration. These pumps can be configured to the requirements of the individual customer. For customized solutions with optional service part configuration, contact your local Grundfos company.

3. Service kits and spares

3.1 Kit - Bearing NDE (Non Drive End)

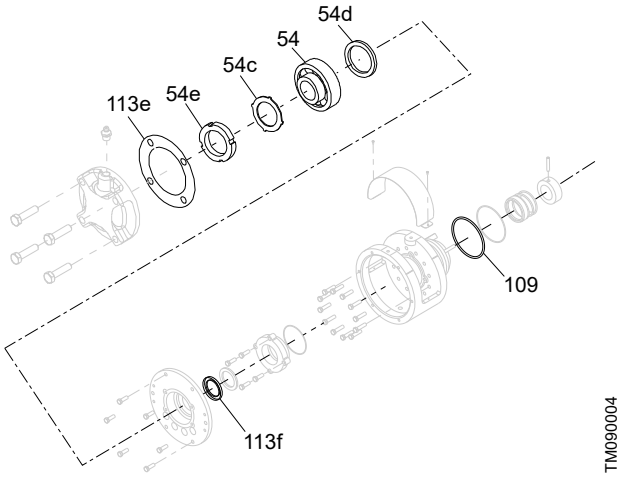

Bearing NDE (Non Drive End)

Kit - Bearing NDE (Non Drive End)
54: 1 × NDE bearing
54b [2]: 1 × Washer
54c: 1 × Lock washer
54d [2]: 1 × Snap ring
54e [2]: 1 × Lock nut
113e: 1 × Gasket for bearing cover
113f: 1 × Lip seal for bearing housing
109 [2]: 1 × O-ring for bearing housing

2) Pos. 109, 54b, 54c, 54d and 54e depend on variant. BOMs are made according to variant creation.

1. Find the pump model, including nominal diameter of inlet port, nominal diameter of outlet port and nominal impeller diameter on the nameplate.

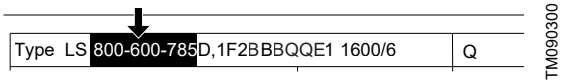

2. Identify the shaft material code on the nameplate.

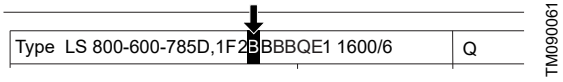

3. Use the pump model and shaft material code to find the bearing kit.

Pump model	Shaft material code	Kit PN
LS 125-100-375	D	*93323394*
	A, B	*93455413*
LS 250-150-455	D	*93323396*
	A, B	*93455415*
LS 200-150-325 LS 250-200-360 LS 250-200-295	D	*93322395*
	A, B	*93455414*
LS 250-200-536	D	*93455417*
LS 300-200-460 LS 300-250-320 LS 300-250-335	D	*93322397*
	A, B	*93455416*
LS 350-250-415 LS 350-250-436	D	*93323398*
	A, B	*93455417*
LS 350-300-372 LS 400-300-400 LS 400-350-335 LS 400-350-345	D	*93323399*
	A, B	*93455418*
LS 450-350-470 LS 450-350-505 LS 500-400-435 LS 500-400-465	D	*93323400*
	A, B	*93455419*
LS 600-450-625 LS 700-500-670 LS 700-500-730	D	*93323401*

3.2 Kit - Bearing DE (Drive End)

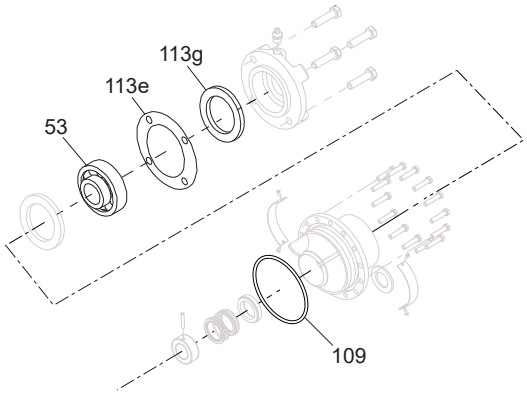

TM090005

Bearing DE (Drive End)

For LS only

Kit - Bearing DE (Drive End)
53: 1 × DE bearing
113e: 1 × Gasket for bearing cover
113g: 1 × Seal for bearing housing
109 [3]: 1 × O-ring for bearing housing

[3] Pos.109 depends on variant. BOMs are made according to variant creation.

For LSV only

Kit - Bearing DE (Drive End)
53: 1 × DE bearing
113e: 1 × Gasket for bearing cover
113g: 2 × Seal for bearing housing
109, 110, 109a [4]: 1 × O-ring for bearing housing
54d [4]: 1 × Snap ring
54b [4]: 1 × Washer
54c [4]: 1 × Lock washer

[4] Pos.109, 110, 109a, 54b, 54c and 54d depend on variant. BOMs are made according to variant creation.

1. Find the pump model, including nominal diameter of inlet port, nominal diameter of outlet port and nominal impeller diameter on the nameplate.

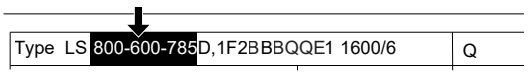

TM090300

2. Identify the shaft material code or shaft seal code on the nameplate.

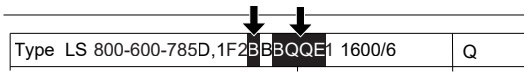

TM091996

3. Use the pump model and shaft material code or shaft seal code to find the bearing kit.

Pump model	Shaft material code	Shaft seal code	Kit PN
LS 125-100-375	D	-	93323402
	A, B	-	93455420
LSV 125-100-375	-	BBVP	93526202
LS 200-150-325	D	-	93323403
	A, B	-	93455421
LSV 200-150-325	-	BBVP	93526203
	-	SBQP	93526266
LS 250-150-455	D	-	93323404
	A, B	-	93455422
LSV 250-150-455	-	SBQP	93526209
LS 250-200-360	D	-	93323403
	A, B	-	93455421
LSV 250-200-360	-	BBVP	93526203
	-	SBQP	93526266
LS 250-200-295	D	-	93323403
	A, B	-	93455421
LSV 250-200-295	-	BBVP	93526203
	-	SBQP	93526266
LS 300-200-460	D	-	93323405
	A, B	-	93455423
LSV 300-200-460	-	BBVP	93526204
LS 300-250-320	D	-	93323405
	A, B	-	93455423
LSV 300-250-320	-	BBVP	93526204
LS 300-250-335	D	-	93323405
	A, B	-	93455423
LSV 300-250-335	-	BBQP	93526204
LS 350-250-415	D	-	93323406
	A, B	-	93455424
LSV 350-250-415	-	BBQP	93526205
LS 350-250-436	D	-	93323406
	A, B	-	93455424
LSV 350-250-436	-	BBQP	93526205
LS 350-300-372	D	-	93323407
	A, B	-	93455425
LSV 350-300-372	-	BBQP	93526208
LS 400-300-400	D	-	93323407
	A, B	-	93455425
LSV 400-300-400	-	BBQP	93526207
LS 400-350-335	D	-	93323407
	A, B	-	93455425
LSV 400-350-335	-	BBQP	93526207
LS 400-350-345	D	-	93323407
	A, B	-	93455425
LSV 400-350-345	-	BBQP	93526207
LS 450-350-470	D	-	93323408
	A, B	-	93455426
LSV 450-350-470	-	BBQP	93526206
LS 450-350-505	D	-	93323408
	A, B	-	93455426
LSV 450-350-505	-	BBQP	93526206
LS 500-400-435	D	-	93323408
	A, B	-	93455426
LSV 500-400-435	-	BBQP	93526210
LS 500-400-465	D	-	93323408
	A, B	-	93455426
LSV 500-400-465	-	BBQP	93526210

Pump model	Shaft material code	Shaft seal code	Kit PN
LS 600-450-625	D	-	*93323409*
LS 700-500-670	D	-	*93323409*
LS 700-500-730	D	-	*93323409*

3.3 Kit - Gasket

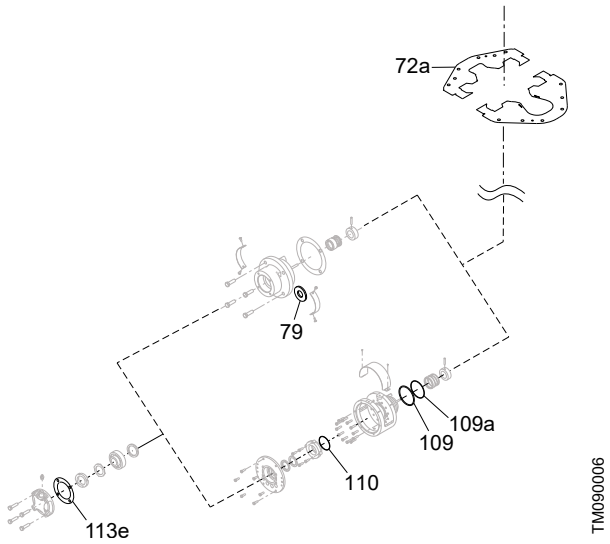

Gasket

Kit - Gasket
72a: 1 × Gasket for pump housing
113e: 1 × Gasket for bearing cover
109, 109a, 110 [5]: 2 × O-ring for bearing housing
79: 1 × Slinger

5) Pos.109, 109a, 110 depend on variant. BOMs are made according to variant creation.

1. Find the pump model, including nominal diameter of inlet port, nominal diameter of outlet port and nominal impeller diameter on the nameplate.

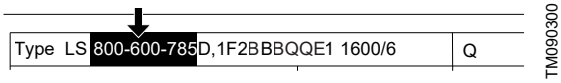

2. Use the pump model to find the gasket kit.

Pump model	Kit PN
LS 125-100-375	*93323410*
LSV 125-100-375	*93526141*
LS 200-150-325	*93323411*
LSV 200-150-325	*93526145*
LS 250-150-455	*93323412*
LSV 250-150-455	*93526150*
LS 250-200-360	*93323414*
LSV 250-200-360	*93526147*
LS 250-200-295	*93323413*
LSV 250-200-295	*93526146*
LS 300-200-460	*93323415*
LSV 300-200-460	*93526138*
LS 300-250-320	*93323417*
LSV 300-250-320	*93526139*
LS 300-250-335	*93323417*

Pump model	Kit PN
LSV 300-250-335	*93526139*
LS 350-250-415	*93323418*
LSV 350-250-415	*93526149*
LS 350-250-436	*93323418*
LSV 350-250-436	*93526149*
LS 350-300-372	*93323419*
LSV 350-300-372	*93526140*
LS 400-300-400	*93323420*
LSV 400-300-400	*93526142*
LS 400-350-335	*93323421*
LSV 400-350-335	*93526143*
LS 400-350-345	*93323421*
LSV 400-350-345	*93526143*
LS 450-350-470	*93323422*
LSV 450-350-470	*93526144*
LS 450-350-505	*93323422*
LSV 450-350-505	*93526144*
LS 500-400-435	*93323423*
LSV 500-400-435	*93526148*
LS 500-400-465	*93323423*
LSV 500-400-465	*93526148*
LS 600-450-625	*93323424*
LS 700-500-670	*93323425*
LS 700-500-730	*93323425*

3.4 Kit - Fastener

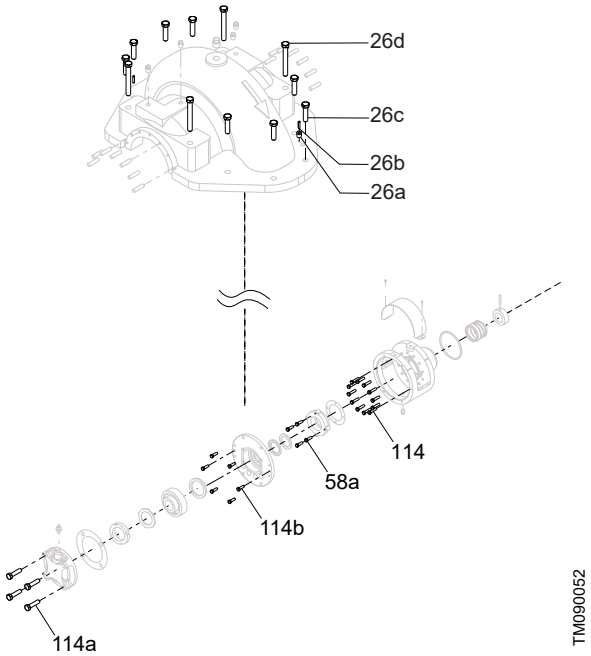

Fastener

Kit - Fastener
26c, 26d: Bolts for the pump housing
114a, 114b: Bolts for bearing cap
114: Bolts for bearing housing
26b: Dowel pin for pump housing top guide
26a: Dowel pin nut
58a: Bolts for seal cover

Note: Fastener BOM depends on variant. BOMs are made according to variant creation.

1. Find the pump model, including nominal diameter of inlet port, nominal diameter of outlet port and nominal impeller diameter on the nameplate.

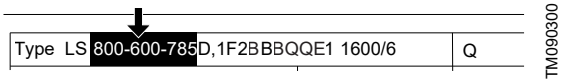

2. Use the pump model to find the fastener kit.

Pump model	Material code
	B, C, D, S
	Pump casing material
	Cast iron
LS 125-100-375	*93323426*
LSV 125-100-375	*93526210*
LS 200-150-325	*93323427*
LSV 200-150-325	*93526211*
LS 250-150-455	*93323428*
LSV 250-150-455	*93526212*
LS 250-200-360	*93323430*
LSV 250-200-360	*93526214*
LS 250-200-295	*93323429*
LSV 250-200-295	*93526213*
LS 300-200-460	*93323431*
LSV 300-200-460	*93526215*

Pump model	Material code
	B, C, D, S
	Pump casing material
	Cast iron
LS 300-250-320 LS 300-250-335	*93323432*
LSV 300-250-320 LSV 300-250-335	*93526216*
LS 350-250-415 LS 350-250-436	*93323433*
LSV 350-250-415 LSV 350-250-436	*93526217*
LS 350-300-372	*93323434*
LSV 350-300-372	*93526218*
LS 400-300-400	*93323435*
LSV 400-300-400	*93526219*
LS 400-350-335 LS 400-350-345	*93323436*
LSV 400-350-335 LSV 400-350-345	*93526220*
LS 450-350-470 LS 450-350-505	*93323437*
LSV 450-350-470 LSV 450-350-505	*93526221*
LS 500-400-435 LS 500-400-465 LSV 500-400-435 LSV 500-400-465	*93323438*
LS 600-450-625	*93323439*
LS 700-500-670 LS 700-500-730	*93323440*

3.5 Kit - Impeller

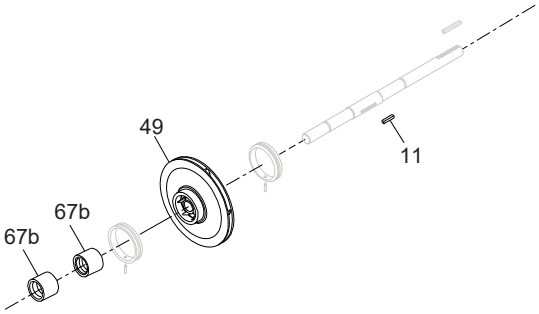

TM090060

Impeller

Kit - Impeller
49: 1 × Impeller
11: 1 × Key for impeller
67b: 2 × Round nut for impeller

1. Find the pump model, including nominal diameter of inlet port, nominal diameter of outlet port and nominal impeller diameter on the nameplate.

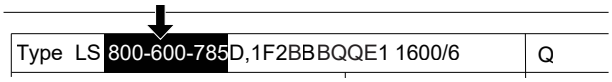

TM090300

2. Identify the shaft material code on the nameplate.

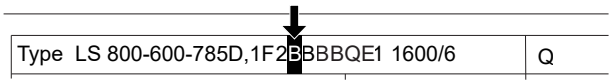

TM090061

3. Use the pump model and shaft material code to find the impeller kit.
4. Check the code on the nameplate to confirm the impeller material. See section Type key for material type.

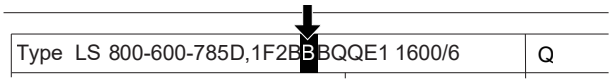

TM091998

Note: The kit part numbers (PNs) for the impeller are based on the nominal size of the impeller. If a customer needs a trimmed size impeller, contact Grundfos. The impeller trim size can be found on the pump nameplate. See section How to search correct service parts.

Pump model	Shaft material code	Impeller material code	Kit PN
	D, A, B (SS420)	Q, S, E (SS304)	
		A (Bronze)	
LS, LSV 125-100-375	D	Q, S	93323509
	A	Q, S	93455464
	B	A	93533329
	D	A, B	93533357
LS, LSV 200-150-325	D	Q, S	93323510
	A	Q, S	93455465
	B	A	93533330
	D	A, B	93533354
LS, LSV 250-150-455	D	Q, S	93323511
	A	Q, S	93526137
	B	A	93533345
	D	A, B	93533364
LS, LSV 250-200-360	D	Q, S	93323513
	A	Q, S	93455468
	B	A	93533343
	D	A, B	93533352

Pump model	Shaft material code	Impeller material code	Kit PN
	D, A, B (SS420)	Q, S, E (SS304)	
		A (Bronze)	
LS, LSV 250-200-295	D	Q, S	93323512
	A	Q, S	93526136
	B	A	93533328
	D	A, B	93533363
LS, LSV 300-200-460	D	Q, S	93323514
	A	Q, S	93455469
	B	A	93533331
	D	A, B	93533353
LS, LSV 300-250-320	D	Q, S	93323515
	A	Q, S	93526097
	B	A	93533333
	D	A, B	93533351
LS, LSV 300-250-335	D	Q, S	93323516
	A	Q, S	93526098
	B	A	93533332
	D	A, B	93533350
LS, LSV 350-250-415	D	Q, S	93323517
	A (LS)	Q, S	93455470
	A (LSV)	Q, S	93526135
	B	A	93533335
	D	A, B	93533347
	B	B	93533366
LS, LSV 350-250-436	D	Q, S	93323518
	A (LS)	Q, S	93455471
	A (LSV)	Q, S	93526134
	B	A	93533334
	D	A, B	93533346
	B	B	93533365
LS, LSV 350-300-372	D	Q, S	93323519
	A	Q, S	93455472
	B	A	93533344
	D	A, B	93533349
LS, LSV 400-300-400	D	Q, S	93323520
	A	Q, S	93455473
	B	A	93533338
	D	A, B	93533348
LS, LSV 400-350-335	D	Q, S	93323521
	A	Q, S	93455474
	B	A	93533340
	D	A, B	93533359
LS, LSV 400-350-345	D	Q, S	93323522
	A	Q, S	93455475
	B	A	93533339
	D	A, B	93533358
LS, LSV 450-350-470	D	Q, S	93323523
	A	Q, S	93455476
	B	A	93533337
	D	A, B	93533356
LS, LSV 450-350-505	D	Q, S	93323524
	A	Q, S	93455477
	B	A	93533336
	D	A, B	93533355

Pump model	Shaft material code	Impeller material code	Kit PN
	D, A, B (SS420)	Q, S, E (SS304)	
		A (Bronze)	
LS, LSV 500-400-435	D	Q, S	*93323525*
	A	Q, S	*93455478*
	B	A	*93533342*
	D	A, B	*93533362*
LS, LSV 500-400-465	D	Q, S	*93323526*
	A	Q, S	*93455479*
	B	A	*93533341*
	D	A, B	*93533361*
LS 600-450-625	D	E	*93323527*
LS 700-500-670	D	E	*93323528*
LS 700-500-730	D	E	*93323529*

Related information

2. Type key

3.6 Kit - Shaft

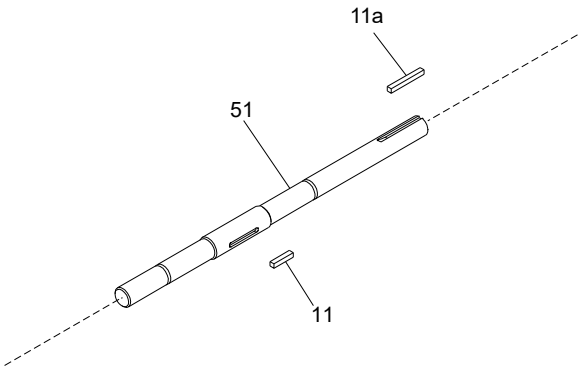

TM090062

Shaft

Kit - Shaft
51: 1 × Shaft
11: 1 × Key for impeller
11a: 1 × Key for coupling

1. Find the pump model, including nominal diameter of inlet port, nominal diameter of outlet port and nominal impeller diameter on the nameplate.

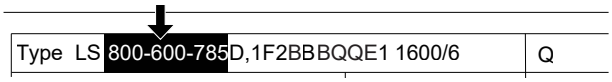

TM090300

2. Identify the shaft material code[6] on the nameplate.

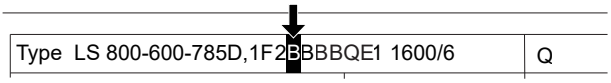

TM090061

3. Identify the impeller material code and the direction of rotation on the nameplate.

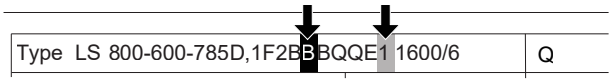

TM092000

4. Use the pump model, shaft material code, impeller material code and direction of rotation to find the shaft kit.

6) Different materials of shaft are available on request. See section Type key.

Pump model	Shaft material code	Impeller material code	Direction of rotation code	Kit PN
	D, A, B (SS420)	Q, S, E (SS304)	1, 2	
LS, LSV 125-100-375	D	Q	1, 2	93323495
	A	Q	1	93455442
	A	Q	2	93455443
	A	S	1	93526110
	A	S	2	93526122
LS, LSV 200-150-325	D	Q	1, 2	93323497
	A	Q	1	93455444
	A	Q	2	93455445
	A	S	1	93526111
	A	S	2	93526123
LS, LSV 250-150-455	D	Q	1, 2	93323498
	A	Q	1	93455446
	A	Q	2	93455447
	A	S	1	93526121
	A	S	2	93526133

Pump model	Shaft material code	Impeller material code	Direction of rotation code	Kit PN
	D, A, B (SS420)	Q, S, E (SS304)	1, 2	
LS, LSV 250-200-360	D	Q	1, 2	93323499
	A	Q	1	93455450
	A	Q	2	93455451
	A	S	1	93526119
	A	S	2	93526131
LS, LSV 250-200-295	D	Q	1, 2	93323497
	A	Q	1	93455448
	A	Q	2	93455449
	A	S	1	93526118
	A	S	2	93526130
LS, LSV 300-200-460	D	Q	1, 2	93323500
	A	Q	1	93455452
	A	Q	2	93455453
	A	S	1	93526112
	A	S	2	93526124
LS, LSV 300-250-320	D	Q	1, 2	93323501
	A	Q	1	93526095
	A	Q	2	93526096
	A	S	1	93526113
	A	S	2	93526125
LS, LSV 300-250-335	D	Q	1, 2	93323501
	A	Q	1	93526095
	A	Q	2	93526096
	A	S	1	93526113
	A	S	2	93526125
LS, LSV 350-250-415	D	Q	1, 2	93323649
	A	Q	1	93455454
	A	Q	2	93455455
	A	S	1	93526114
	A	S	2	93526126
LS, LSV 350-250-436	D	Q	1, 2	93323649
	A	Q	1	93455454
	A	Q	2	93455455
	A	S	1	93526114
	A	S	2	93526126
LS, LSV 350-300-372	D	Q	1, 2	93323503
	A	Q	1	93455456
	A	Q	2	93455457
	A	S	1	93526120
	A	S	2	93526132
LS, LSV 400-300-400	D	Q	1, 2	93323650
	A	Q	1	93455458
	A	Q	2	93455459
	A	S	1	93526116
	A	S	2	93526128
LS, LSV 400-350-335	D	Q	1, 2	93323650
	A	Q	1	93455458
	A	Q	2	93455459
	A	S	1	93526116
	A	S	2	93526128

Pump model	Shaft material code	Impeller material code	Direction of rotation code	Kit PN
	D, A, B (SS420)	Q, S, E (SS304)	1, 2	
LS, LSV 400-350-345	D	Q	1, 2	93323650
	A	Q	1	93455458
	A	Q	2	93455459
	A	S	1	93526116
	A	S	2	93526128
LS, LSV 450-350-470	D	Q	1, 2	93323505
	A	Q	1	93455460
	A	Q	2	93455461
	A	S	1	93526115
	A	S	2	93526127
LS, LSV 450-350-505	D	Q	1, 2	93323505
	A	Q	1	93455460
	A	Q	2	93455461
	A	S	1	93526115
	A	S	2	93526127
LS, LSV 500-400-435	D	Q	1, 2	93323506
	A	Q	1	93455462
	A	Q	2	93455463
	A	S	1	93526117
	A	S	2	93526129
LS, LSV 500-400-465	D	Q	1, 2	93323506
	A	Q	1	93455462
	A	Q	2	93455463
	A	S	1	93526117
	A	S	2	93526129
LS 600-450-625	D	E	1, 2	93323507
LS 700-500-670 LS 700-500-730	D	E	1, 2	93323508

Related information

2. *Type key*

3.7 Kit - Stuffing box packing (only for LS)

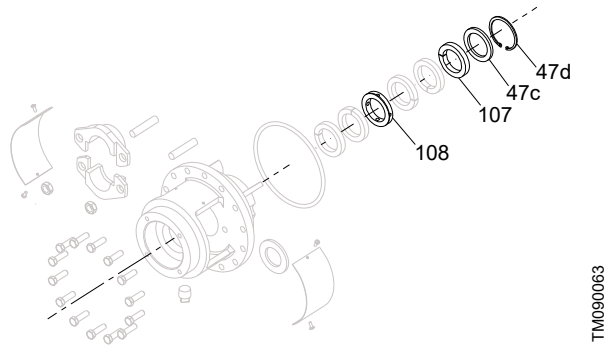

Stuffing box packing

Kit - Stuffing box packing
107 [7]: 10-12 × Packing ring
108: 1 × Distribution ring
47c: 1 × Retainer for packing
47d: 1 × Snap ring

7) Piece of packing ring depends on variant. BOMs are made according to variant creation.

This service kit is only for Factory product variant (FPV) pumps, will be created on request.

3.8 Kit - Stuffing box gland (only for LS)

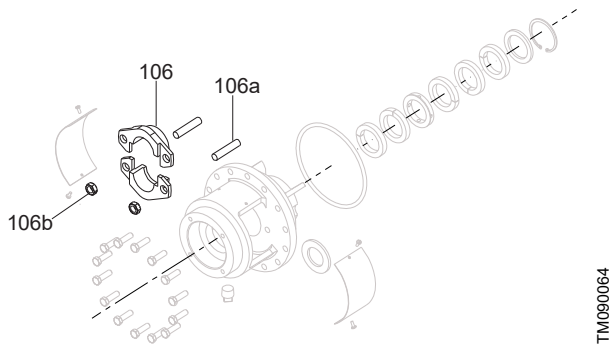

Stuffing box gland

Kit - Stuffing box gland
106: 2 × Packing gland
106a: 4 × Stud
106b: 4 × Nut

This service kit is only for Factory product variant (FPV) pumps, will be created on request.

3.9 Kit - Shaft sleeve

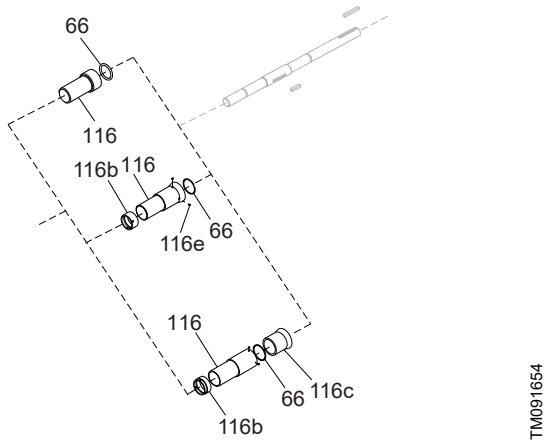

Shaft sleeve for LS

Kit - Shaft sleeve for LS
116: 2 × Sleeve (variant)
116a: 1 × Locking sleeve, drive end (variant)
116b: 1 × Locking sleeve, non-drive end (variant)
66: 2 × O-ring
116e: 4 × Set screw (variant)

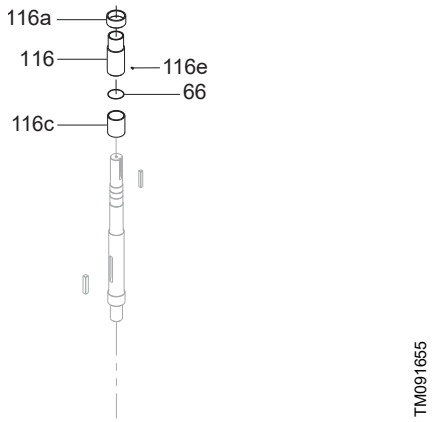

Shaft sleeve for LSV

Kit - Shaft sleeve for LSV
116a: 1 × Locking sleeve
66: 1 × O-ring
116: 1 × Shaft sleeve
116c: 1 × Shaft sleeve, inner (variant)
116e: 2 × Screws

1. Find the pump model, including nominal diameter of inlet port, nominal diameter of outlet port and nominal impeller diameter on the nameplate.

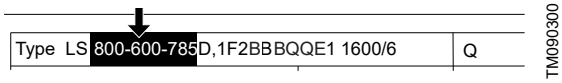

2. Identify the code for pipe connection, sleeve material code and direction of rotation code on the nameplate.

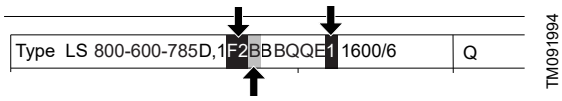

3. Use the information you find on the nameplate to locate the service kit.

LS

Pump model	Sleeve material code	Kit PN
	A (SS304), B (Bronze)	
LS 125-100-375	A	93455480
	B	93533416
LS 200-150-325	A	93455481
	B	93533417
LS 250-150-455	A	93455482
	B	93533418
LS 250-200-360	A	93455484
	B	93533420
LS 250-200-295	A	93455483
	B	93533419
LS 250-200-536	A	93455486
LS 300-200-460	A	93455485
	B	93533421
LS 300-250-320 LS 300-250-335	A	93526099
	B	93533427
LS 350-250-415 LS 350-250-436	A	93455486
	B	93533422
LS 350-300-372	A	93455487
	B	93533423
LS 400-300-400 LS 400-350-335 LS 400-350-345	A	93455488
	B	93533424
LS 450-350-470 LS 450-350-505	A	93455489
	B	93533425
LS 500-400-435 LS 500-400-465	A	93455490
	B	93533426

LSV

Pump model	Code for pipe connection	Sleeve material code	Direction of rotation code	Kit PN
	F1, F2, F3	A (SS304), B (Bronze)	1, 2	
LSV 125-100-375	F1	A	1	93526164
	F1	B	1	93533368
	F1	B	2	93533380
	F2	A	2	93526176
	F3	A	1	93526229
	F3	A	2	93526241
	F3	B	1	93533392
	F3	B	2	93533404
LSV 200-150-325	F1	A	1	93526165
	F1	B	1	93533369
	F1	B	2	93533381
	F2	A	2	93526177
	F3	A	1	93526230
	F3	A	2	93526242
	F3	B	1	93533393
	F3	B	2	93533405
LSV 250-150-455	F1	A	1	93526175
	F1	B	1	93533379
	F1	B	2	93533391
	F2	A	2	93526188
	F3	A	1	93526240
	F3	A	2	93526252
	F3	B	1	93533403
	F3	B	2	93533415
LSV 250-200-360	F1	A	1	93526173
	F1	B	1	93533377
	F1	B	2	93533389
	F2	A	2	93526186
	F3	A	1	93526238
	F3	A	2	93526250
	F3	B	2	93533401
	F3	B	1	93533413
LSV 250-200-295	F1	A	1	93526172
	F1	B	1	93533376
	F1	B	2	93533388
	F2	A	2	93526185
	F3	A	1	93526237
	F3	A	2	93526249
	F3	B	1	93533400
	F3	B	2	93533412
LSV 250-200-536	F1	A	1	93526168
LSV 300-200-460	F1	A	1	93526166
	F1	B	1	93533370
	F1	B	2	93533382
	F2	A	2	93526179
	F3	A	1	93526231
	F3	A	2	93526243
	F3	B	1	93533394
	F3	B	2	93533406

Pump model	Code for pipe connection	Sleeve material code	Direction of rotation code	Kit PN
	F1, F2, F3	A (SS304), B (Bronze)	1, 2	
LSV 300-250-320 LSV 300-250-335	F1	A	1	93526167
	F1	B	1	93533371
	F1	B	2	93533383
	F2	A	2	93526180
	F3	A	1	93526232
	F3	A	2	93526244
	F3	B	1	93533395
	F3	B	2	93533407
LSV 350-250-415 LSV 350-250-436	F1	A	1	93526168
	F1	B	1	93533372
	F1	B	2	93533384
	F2	A	2	93526181
	F3	A	1	93526233
	F3	A	2	93526245
	F3	B	1	93533396
	F3	B	2	93533408
LSV 350-300-372	F1	A	1	93526174
	F1	B	1	93533378
	F1	B	2	93533390
	F2	A	2	93526187
	F3	A	1	93526239
	F3	A	2	93526251
	F3	B	1	93533402
	F3	B	2	93533414
LSV 400-300-400 LSV 400-350-335 LSV 400-350-345	F1	A	1	93526170
	F1	B	1	93533374
	F1	B	2	93533386
	F2	A	2	93526183
	F3	A	1	93526235
	F3	A	2	93526247
	F3	B	1	93533398
	F3	B	2	93533410
LSV 450-350-470 LSV 450-350-505	F1	A	1	93526169
	F1	B	1	93533373
	F1	B	2	93533385
	F2	A	2	93526182
	F3	A	1	93526233
	F3	A	2	93526246
	F3	B	1	93533397
	F3	B	2	93533409
LSV 500-400-435 LSV 500-400-465	F1	A	1	93526171
	F1	B	1	93533375
	F1	B	2	93533387
	F2	A	2	93526184
	F3	A	1	93526236
	F3	A	2	93526248
	F3	B	1	93533399
	F3	B	2	93533411

3.10 Kit - Shaft seal NDE (Non Drive End)

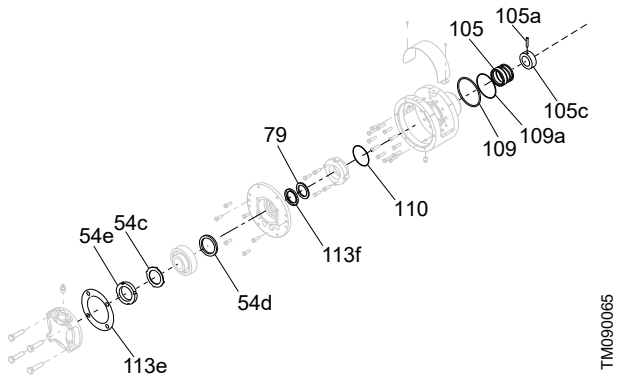

Shaft seal NDE (Non Drive End)

Kit - Shaft seal NDE (Non Drive End)
105: 1 × Shaft seal
105a: 3 × Set screw for retaining ring
105c: 1 × Seal retaining ring
79: 1 × Slinger
109, 110, 109a [8]: 1 × O-ring for bearing housing
113e: 1 × Gasket for bearing cover
54c: 1 × Lock washer for bearing
54d [8]: 1 × Snap ring
54e: 1 × Lock nut for bearing
113f [8]: 1 × Lip seal for bearing housing

[8] Pos.113f, 109, 110, 109a and 54d depend on variant. BOMs are made according to variant creation.

1. Identify the type of shaft seal via the code on the nameplate.

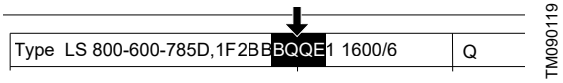

2. Identify the shaft material code on the nameplate.

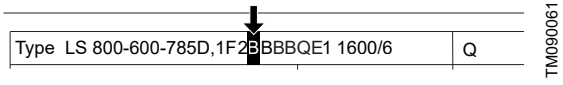

3. Find the pump model, including nominal diameter of inlet port, nominal diameter of outlet port and nominal impeller diameter on the nameplate.

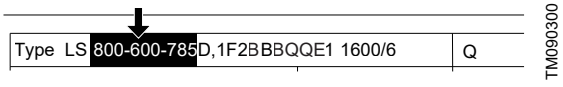

4. Use the pump model and shaft material code to find the shaft seal kit.

Shaft seal NDE (Non Drive End)

Pump model	Shaft material code	Kit PN
LS 125-100-375	D	*93323624*
	A	*93455427*
LS 200-150-325 LS 250-200-360 LS 250-200-295	D	*93323587*
	A	*93455428*
LS 250-150-455	D	*93323625*
	A	*93455429*
LS 300-200-460 LS 300-250-320 LS 300-250-335	D	*93323588*
	A	*93455430*
LS 350-250-415 LS 350-250-436	D	*93323621*
	A	*93455431*
LS 350-300-372	D	*93323622*
	A	*93455432*
LS 400-300-400 LS 400-350-335 LS 400-350-345	Q	*93323589*
	A	*93455432*
LS 450-350-470 LS 450-350-505 LS 500-400-435 LS 500-400-465	D	*93323623*
	A	*93455433*
LS 600-450-625 LS 700-500-670 LS 700-500-730	D	*93323620*

The following shaft seals are also available on request, if you prefer to replace the old one with a new type, please contact Grundfos.

Type	Description
BAQE	Rubber bellows unbalance seal, carbon, SiC, EPDM
AAQE	O-ring unbalance seal, carbon, SiC, EPDM
DAQE	O-ring balance seal, carbon, SiC, EPDM
SAQE	Rubber bellows balance seal, carbon, SiC, EPDM
ABQE	O-ring unbalance seal, carbon, SiC, EPDM
DBQE	O-ring balance seal, carbon, SiC, EPDM
SBQE	Rubber bellows balance seal, carbon, SiC, EPDM
AQQE	O-ring unbalance seal, SiC, SiC, EPDM
DQQE	O-ring balance seal, SiC, SiC, EPDM
SNEK	Stuffing box with synthetic polymer packing rings, uncooled, with internal barrier fluid
BAQV	Rubber bellows unbalance seal, carbon, SiC, FKM
AAQV	O-ring unbalance seal, carbon, SiC, FKM
DAQV	O-ring balance seal, carbon, SiC, FKM
SAQV	Rubber bellows balance seal, carbon, SiC, FKM
BBQV	Rubber bellows unbalance seal, carbon, SiC, FKM
ABQV	O-ring unbalance seal, carbon, SiC, FKM
DBQV	O-ring balance seal, carbon, SiC, FKM
SBQV	Rubber bellows balance seal, carbon, SiC, FKM
BQQV	Rubber bellows unbalance seal, SiC, SiC, FKM
AQQV	O-ring unbalance seal, SiC, SiC, FKM
DQQV	O-ring balance seal, SiC, SiC, FKM
SQQV	Rubber bellows balance seal, SiC, SiC, FKM

Related information

2. Type key

3.11 Kit - Shaft seal DE (Drive End)

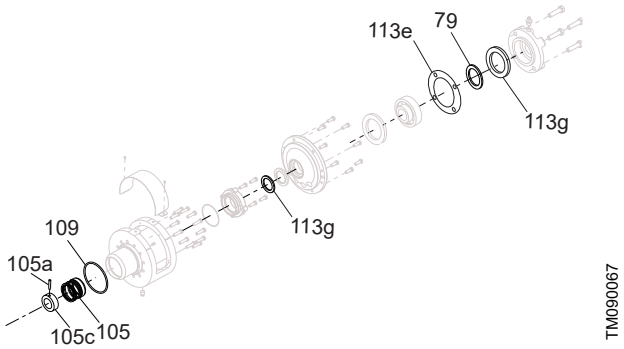

Shaft seal DE (Drive End)

Kit - Shaft seal DE (Drive End)
105: 1 × Shaft seal
105a [9]: 3 × Set screws for retaining ring
105c: 1 × Retaining ring
79: 1 × Slinger
109 [9]: 1 × O-ring for bearing housing
54b [9]: 1 × Washer
54c [9]: 1 × Lock washer for bearing
54d [9]: 1 × Snap ring
54e [9]: 1 × Lock nut for bearing
113e: 1 × Gasket for bearing cover
113g: 2 × Lip seal for bearing housing

9) Pos.109, 54b, 54c, 54d, 54e, 105a and 113g depend on variant. BOMs are made according to variant creation.

1. Identify the type of shaft seal via the code on nameplate.

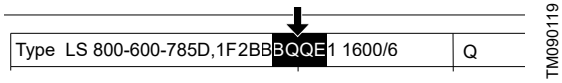

2. Find the pump model, including nominal diameter of inlet port, nominal diameter of outlet port and nominal impeller diameter on the nameplate.

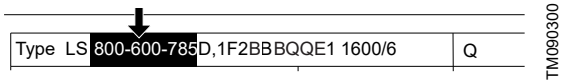

3. Identify the shaft material code on nameplate.

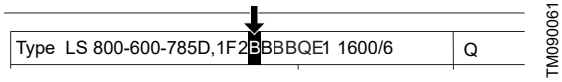

4. Identify the code for pipe connection and impeller material code on the nameplate.

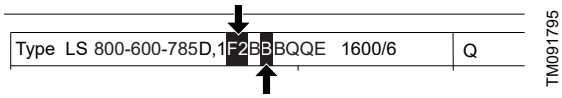

5. Use the pump model, pipe connection code, shaft material code and impeller material code to find the service kit.

Shaft seal DE (Drive End)

Pump model	Pipe connection code	Shaft material code	Impeller material code	Kit PN
LS, LSV 125-100-375	F1, F2	D	A, B, S, Q	93323633
	F3 (LS)	A, B	A, Q	93455434
	F2	A, B	A, Q	93526189
	F1	A, B	B, S	93526190
	F3 (LSV)	A, B	A, Q	93526268
LS, LSV 200-150-325	F1, F2	D	A, B, S, Q	93323626
	F3 (LS)	A, B	A, Q	93455435
	F2	A, B	A, Q	93526192
	F1	A, B	B, S	93526191
	F3 (LSV)	A, B	A, Q	93526269
LS, LSV 250-150-455	F1, F2	D	A, B, S, Q	93323634
	F3 (LS)	A, B	A, Q	93455436
	F2	A, B	A, Q	93526200
	F1	A, B	B, S	93526199
	F3 (LSV)	A, B	A, Q	93526275
LS, LSV 250-200-360	F1, F2	D	A, B, S, Q	93323626
	F3 (LS)	A, B	A, Q	93455435
	F2	A, B	A, Q	93526192
	F1	A, B	B, S	93526191
	F3 (LSV)	A, B	A, Q	93526269
LS, LSV 250-200-295	F1, F2	D	A, B, S, Q	93323626
	F3 (LS)	A, B	A, Q	93455435
	F2	A, B	A, Q	93526192
	F1	A, B	B, S	93526191
	F3 (LSV)	A, B	A, Q	93526269

Pump model	Pipe connection code	Shaft material code	Impeller material code	Kit PN
LS, LSV 300-200-460	F1, F2	D	A, B, S, Q	93323627
	F3 (LS)	A, B	A, Q	93455437
	F2	A, B	A, Q	93526194
	F1	A, B	B, S	93526193
	F3 (LSV)	A, B	A, Q	93526270
LS, LSV 300-250-320	F1, F2	D	A, B, S, Q	93323627
	F3 (LS)	A, B	A, Q	93455437
	F2	A, B	A, Q	93526194
	F1	A, B	B, S	93526193
	F3 (LSV)	A, B	A, Q	93526270
LS, LSV 300-250-335	F1, F2	D	A, B, S, Q	93323627
	F3 (LS)	A, B	A, Q	93455437
	F2	A, B	A, Q	93526194
	F1	A, B	B, S	93526193
	F3 (LSV)	A, B	A, Q	93526270
LS, LSV 350-250-415	F1, F2	D	A, B, S, Q	93323630
	F3 (LS)	A, B	A, Q	93455438
	F1	A, B	B, S	93526195
	F3 (LSV)	A, B	A, Q	93526271
LS, LSV 350-250-436	F1, F2	D	A, B, S, Q	93323630
	F3 (LS)	A, B	A, Q	93455438
	F1	A, B	B, S	93526195
	F3 (LSV)	A, B	A, Q	93526271
LS, LSV 350-300-372	F1, F2	D	A, B, S, Q	93323631
	F3 (LS)	A, B	A, Q	93455440
	F1	A, B	B, S	93526198
	F3 (LSV)	A, B	A, Q	93526274
LS, LSV 400-300-400	F1, F2	D	A, B, S, Q	93323628
	F3 (LS)	A, B	A, Q	93455440
	F1	A, B	B, S	93526197
	F3 (LSV)	A, B	A, Q	93526273
LS, LSV 400-350-335	F1, F2	D	A, B, S, Q	93323628
	F3 (LS)	A, B	A, Q	93455440
	F1	A, B	B, S	93526197
	F3 (LSV)	A, B	A, Q	93526273
LS, LSV 400-350-345	F1, F2	D	A, B, S, Q	93323628
	F3 (LS)	A, B	A, Q	93455440
	F1	A, B	B, S	93526197
	F3 (LSV)	A, B	A, Q	93526273
LS, LSV 450-350-470	F1, F2	D	A, B, S, Q	93323632
	F3 (LS)	A, B	A, Q	93455441
	F1	A, B	B, S	93526196
	F3 (LSV)	A, B	A, Q	93526272
LS, LSV 450-350-505	F1, F2	D	A, B, S, Q	93323632
	F3 (LS)	A, B	A, Q	93455441
	F1	A, B	B, S	93526196
	F3 (LSV)	A, B	A, Q	93526272
LS, LSV 500-400-435 LS, LSV 500-400-465	F1, F2	D	A, B, S, Q	93323632
	F3 (LS)	A, B	A, Q	93455441
	F1	A, B	B, S	93526201
	F3 (LSV)	A, B	A, Q	93526276
LS 600-450-625 LS 700-500-670 LS 700-500-730	F3	D	E	93323629

The following shaft seals are also available on request, if you prefer to replace the old one with a new type, please contact Grundfos.

Type	Description
BAQE	Rubber bellows unbalance seal, carbon, SiC, EPDM
AAQE	O-ring unbalance seal, carbon, SiC, EPDM
DAQE	O-ring balance seal, carbon, SiC, EPDM
SAQE	Rubber bellows balance seal, carbon, SiC, EPDM
ABQE	O-ring unbalance seal, carbon, SiC, EPDM
DBQE	O-ring balance seal, carbon, SiC, EPDM
SBQE	Rubber bellows balance seal, carbon, SiC, EPDM
AQQE	O-ring unbalance seal, SiC, SiC, EPDM
DQQE	O-ring balance seal, SiC, SiC, EPDM
SNEK	Stuffing box with synthetic polymer packing rings, uncooled, with internal barrier fluid
BAQV	Rubber bellows unbalance seal, carbon, SiC, FKM
AAQV	O-ring unbalance seal, carbon, SiC, FKM
DAQV	O-ring balance seal, carbon, SiC, FKM
SAQV	Rubber bellows balance seal, carbon, SiC, FKM
BBQV	Rubber bellows unbalance seal, carbon, SiC, FKM
ABQV	O-ring unbalance seal, carbon, SiC, FKM
DBQV	O-ring balance seal, carbon, SiC, FKM
SBQV	Rubber bellows balance seal, carbon, SiC, FKM
BQQV	Rubber bellows unbalance seal, SiC, SiC, FKM
AQQV	O-ring unbalance seal, SiC, SiC, FKM
DQQV	O-ring balance seal, SiC, SiC, FKM
SQQV	Rubber bellows balance seal, SiC, SiC, FKM

Related information

2. Type key

3.12 Spare - Shaft seal

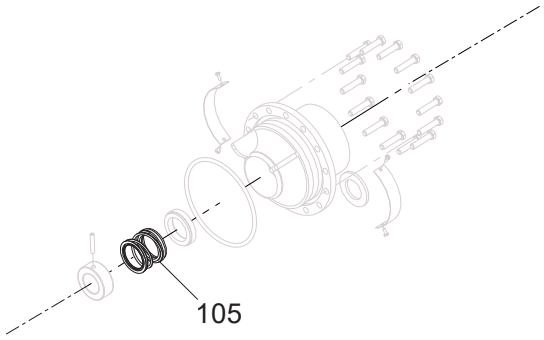

TM092009

Shaft seal

Follow the instruction in section Kit - Shaft seal DE (Drive end), you can find the spare - shaft seal in the table below.

Pump model	Pipe connection code	Shaft material code	Impeller material code	Spare PN
LS, LSV 125-100-375	F1, F2	D	A, B, S, Q	93323465
	F3	A, B	A, Q	93455491
	F2	A, B	A, Q	93526104
	F1	A, B	B, S	93526103
LS, LSV 200-150-325	F1, F2	D	A, B, S, Q	93323460
	F3	A, B	A, Q	93455492
	F2	A, B	A, Q	93526107
	F1	A, B	B, S	93526106
LS, LSV 250-150-455	F1, F2	D	A, B, S, Q	93323466
	F3	A, B	A, Q	93455493
	F2	A, B	A, Q	93526109
	F1	A, B	B, S	93526108
LS, LSV 250-200-360	F1, F2	D	A, B, S, Q	93323460
	F3	A, B	A, Q	93455492
	F2	A, B	A, Q	93526107
	F1	A, B	B, S	93526106
LS, LSV 250-200-295	F1, F2	D	A, B, S, Q	93323460
	F3	A, B	A, Q	93455492
	F2	A, B	A, Q	93526107
	F1	A, B	B, S	93526106
LS, LSV 250-200-536	F1, F2	A	U	93526280
	F3	A	U	93526281
	F2	D	U	93526289
LS, LSV 300-200-460 LS, LSV 300-250-320 LS, LSV 300-250-335	F1, F2	D	A, B, S, Q	93323461
	F3	A, B	A, Q	93455494
	F2	A, B	A, Q	93526101
	F1	A, B	B, S	93526100
LS, LSV 350-250-415 LS, LSV 350-250-436 LS, LSV 450-350-470 LS, LSV 450-350-505 LS, LSV 500-400-435 LS, LSV 500-400-465	F1, F2	D	A, B, S, Q	93323464
	F3	A, B	A, Q	93526093
	F2	A, B	A, Q	93526105
	F1	A, B	B, S	
LS, LSV 350-300-372 LS, LSV 400-300-400 LS, LSV 400-350-335 LS, LSV 400-350-345	F1, F2	D	A, B, S, Q	93323462
	F3	A, B	A, Q	93526094
	F2	A, B	A, Q	93526102
	F1	A, B	B, S	
LS 600-450-625 LS 700-500-670 LS 700-500-730	F3	D	E	93323463

3.13 Kit/spare - Wear ring

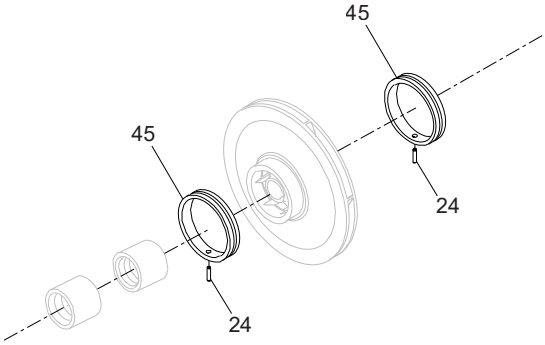

TM090070

Kit - wear ring

Kit - Wear ring
45: 1 × Wear ring
24: 1 × Locking pin

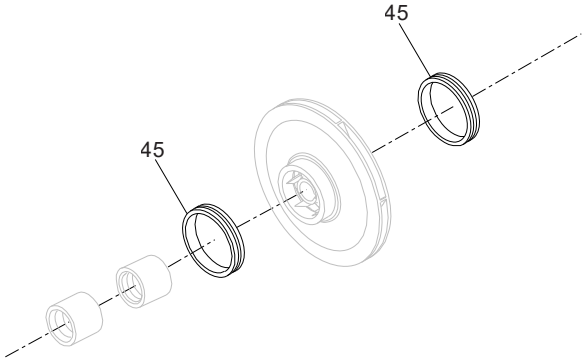

TM090468

Spare - wear ring

Spare - Wear ring
45: 1 × Wear ring

1. Find the pump model, including nominal diameter of inlet port, nominal diameter of outlet port and nominal impeller diameter on the nameplate.

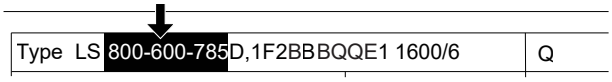

TM090300

2. Identify the shaft material code on the nameplate.

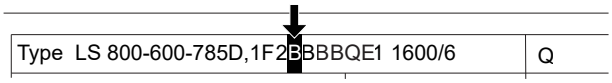

TM090061

3. Identify the impeller material code on the nameplate.

TM091998

4. Use the pump model, shaft material code and impeller material code to find the wear ring kit.

Pump model	Shaft material code	Impeller material code	Wear ring material	
			Brass	
	A, B, D	A, B, Q, S	Kit PN	Spare PN
LS, LSV 125-100-375	A, D	A, B	93323638	-
	B, D	Q, S	93533313	
LS, LSV 200-150-325 LS, LSV 250-200-295	A, D, Q	A, B, S, Q	93323639	-
	B, D	A, B	93533314	
LS, LSV 250-150-455	A, D, Q	A, B, S, Q	93323640	-
	B, D	A, B	93533315	
LS, LSV 250-200-360	A, D, Q	A, B, S, Q	93323635	-
	B, D	A, B	93533310	
LS, LSV 300-200-460	A, D, Q	A, B, S, Q	93323636	-
	B, D	A, B	93533311	
LS, LSV 300-250-320 LS, LSV 300-250-335	A, D, Q	A, B, S, Q	93323478	-
	B, D	A, B	93533303	
LS, LSV 350-250-415 LS, LSV 350-250-436	A, D, Q	A, B, S, Q	93323637	-
	B, D	A, B	93533312	
LS, LSV 350-300-372	A, D	Q, S	-	93323487
LS, LSV 400-300-400	A, D, Q	Q, S	-	93323483
LS, LSV 400-350-335 LS, LSV 400-350-345	A, D, Q	A, B, S, Q	93323641	-
	B, D	A, B	93533316	
LS, LSV 450-350-470 LS, LSV 450-350-505	A, D, Q	A, B, S, Q	-	93323488
	B, D	A, B	-	93533308
LS, LSV 500-400-435 LS, LSV 500-400-465	A, D, Q	A, B, S, Q	-	93323494
	B, D	A, B		93533309
LS 600-450-625	D	E	-	93323484
LS 700-500-670 LS 700-500-730	D	E	-	93323485

3.14 Kit - Sleeve bearing (only for LSV)

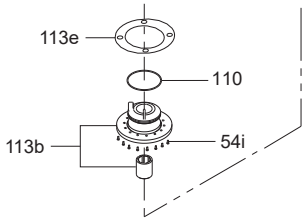

TM091656

Sleeve bearing (only for LSV)

Kit - Sleeve bearing (only for LSV)
110: 1 × O-ring
113b: 1 × Sleeve bearing
113e: 1 × Gasket (variant)
54i: Number of screws (variant)

1. Find the pump model, including nominal diameter of inlet port, nominal diameter of outlet port and nominal impeller diameter on the nameplate.

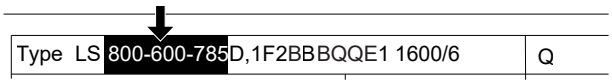

TM090300

2. Identify the pipe connection code on the nameplate.

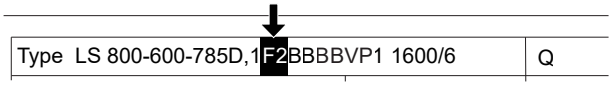

TM092007

3. Use the pump model and pipe connection code to find the service kit.

Pump model	Pipe connection code	Kit PN
LSV 125-100-375	F1, F2	*93533317*
	F3	*93533324*
LSV 200-150-325	F1, F2	*93533318*
	F3	*93533325*
LSV 250-150-455	F1, F2	*93533323*
	F3	*93533327*
LSV 250-200-360 LSV 250-200-295	F1, F2	*93533318*
	F3	*93533325*
LSV 300-200-460 LSV 300-250-320 LSV 300-250-335	F1, F2	*93533319*
	F3	*93533326*
LSV 350-250-415 LSV 350-250-436	F1, F2	*93533320*
	F3	
LSV 350-300-372	F1, F2	*93533322*
	F3	
LSV 400-300-400 LSV 400-350-335 LSV 400-350-345 LSV 450-350-470 LSV 450-350-505 LSV 500-400-435 LSV 500-400-465	F1, F2	*93533321*
	F3	

3.15 Spare - O-ring for sleeve bearing (only for LSV)

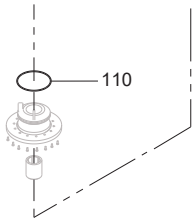

TM092008

O-ring for sleeve bearing

Spare - O-ring for sleeve bearing (only for LSV)
110: 1 × O-ring

Pump model	Kit PN
LSV 125-100-375 LSV 200-150-325 LSV 250-150-455	*93533428*
LSV 250-200-360 LSV 250-200-295	*93533429*
LSV 300-200-460 LSV 300-250-320 LSV 300-250-335	*93533430*
LSV 350-250-415 LSV 350-250-436 LSV 450-350-470 LSV 450-350-505 LSV 500-400-435 LSV 500-400-465	*93533431*
LSV 350-300-372 LSV 400-300-400 LSV 400-350-335 LSV 400-350-345	*93533432*

3.16 Kit - Standard coupling

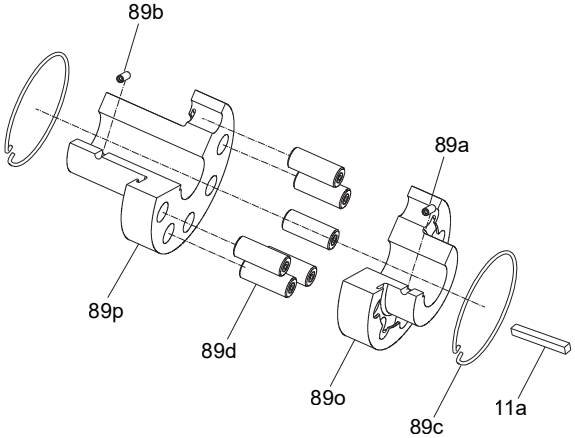

TM090071

Standard coupling

Kit - Standard coupling
89a: 1 × Set screw, motor hub
89b: 1 × Set screw, pump hub
89c: 2 × Circlip
89d [10]: Pins with rubber
89o: 1 × Motor hub for coupling
89p: 1 × Pump hub for coupling
11a: 1 × Key

[10] The number of pins depends on the variant.

1. Identify the coupling type via the code in type key.

TM090118

2. If the value is 1, 2, 6 or 7, it's a standard coupling.
3. Find the pump model, including nominal diameter of inlet port, nominal diameter of outlet port and nominal impeller diameter on the nameplate.
4. Identify the power and pole on the nameplate.

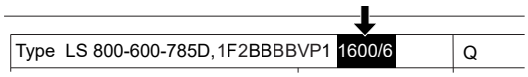

TM092029

5. Use the pump model, power and pole to find the standard coupling kit.

Pump model	Power [kW]	Pole	Kit PN
LS 125-100-375	22	4	*93323530*
	30	4	*93323531*
	37 / 45	4	*93323532*
	15 / 18.5 / 22 / 30	4	*93323533*
	15	6	*93323655*
LSV 125-100-375	15	4	*93526154*
	18.5 / 22	4	*93526155*
	30	4	*93526156*
	37 / 45	4	*93526157*

Pump model	Power [kW]	Pole	Kit PN
LS 200-150-325	22	4	93323655
	30	4	93323651
	37 / 45	4	93323652
	55	4	93323653
	7.5 / 11	6	93323654
	15	6	93323655
LSV 200-150-325	37 / 45	4	93323652
	55	4	93323653
	7.5 / 11	6	93323654
	15 / 22	4, 6	93323662
	30	4	93323663
LS 200-150-455	50	4	93323656
	75 / 90	4	93323657
	110 / 132 / 160 / 185	4	93323658
	15	6	93323659
	18.5 / 22	6	93323660
	30	6	93323661
	37	6	93323656
	45 / 55	6	93323657
LS 250-200-295	18.5 / 22	4	93323662
	30	4	93323663
	37 / 45	4	93323652
	5.5	6	93323547
	7.5 / 11	6	93323654
	15	6	93323662
LSV 250-200-295	5.5	6	93323547
	37 / 45	4	93323652
	7.5 / 11	6	93323654
	15 / 18.5 / 22	4, 6	93323662
	30	4	93323663
LS 250-200-360	55	4	93323653
	75 / 90	4	93323664
	110	4	93323665
	15	6	93323655
	18.5 / 22	6	93323663
	30	6	93323652
	37	6	93323653
LSV 250-200-360	30 / 45	4, 6	93323652
	37 / 55	4, 6	93323653
	15	6	93323662
	18.5 / 22	6	93323663
	75 / 90	4	93323664
	110	4	93323665
LS 300-200-460	90	4	93323552
	110 / 132 / 160 / 185 / 200	4	93323550
	220 / 250	4	93323551
	30	6	93323553
	37	6	93323554
	45 / 55	6	93323552
	75	6	93323550

Pump model	Power [kW]	Pole	Kit PN
LSV 300-200-460	220 / 250	4	93323551
	45 / 55 / 90	4, 6	93323552
	30	6	93323553
	37	6	93323554
	75 / 110 / 132 / 160 / 185 / 200	4, 6	93526151
LS 300-250-320	45	4	93323553
	55	4	93323554
	75 / 90	4	93323552
	15	6	93323555
	18.5 / 22	6	93323556
	30	6	93323553
LSV 300-250-320	75 / 90	4	93323552
	30 / 45	4, 6	93323553
	55	4	93323554
	18.5 / 22	6	93526152
	15	6	93526153
LS 350-250-335	75 / 90	4	93323552
	110	4	93323550
	22	6	93323556
	30	6	93323553
	37	6	93323554
LS 350-250-415	110 / 132 / 160 / 185 / 200	4	93323557
	220	4	93323558
	37	6	93323559
	45 / 55	6	93323560
	75	6	93323557
LSV 350-250-415	75 / 110 / 132 / 185 / 200	4, 6	93323557
	37 / 45 / 55	6	93323560
	220	4	93526163
LS 350-250-436	160 / 185 / 200	4	93323557
	220 / 250 / 280	4	93323558
	45 / 55	6	93323560
	75 / 90	6	93323557
LSV 350-250-436	75 / 90 / 160 / 185 / 200	4, 6	93323557
	45 / 55	6	93323560
	220 / 250 / 280	4	93526163
LS 350-300-372	90	4	93323561
	110 / 132 / 160 / 185 / 200	4	93323562
	30	6	93323563
	37	6	93323564
	45 / 55	6	93323561
LSV 350-300-372	45 / 55 / 90	4, 6	93323561
	110 / 132 / 160 / 185 / 200	4	93323562
	30	6	93323563
	37	6	93323564
LS 400-300-400	160 / 185 / 200	4	93323562
	220 / 250 / 280	4	93323565
	37	6	93323564
	45 / 55	6	93323561
	75 / 90	6	93323562

Pump model	Power [kW]	Pole	Kit PN
LSV 400-300-400	75 / 90 / 160 / 185 / 200	4, 6	93323550
	220 / 250 / 280	4	93323551
	45 / 55	6	93323552
	37	6	93323554
LS 400-350-335	90	4	93323561
	110 / 132	4	93323562
	30	6	93323563
	37	6	93323564
LSV 400-350-335	110 / 132	4	93323550
	90	4	93323552
	30	6	93323553
	37	6	93323554
LS 400-350-345	110 / 132 / 160 / 185	4	93323562
	37	6	93323564
	45 / 55	6	93323561
LSV 400-350-345	110 / 132 / 160 / 185	4	93323550
	45 / 55	6	93323552
	37	6	93323554
LS 450-350-470	250 / 280 / 315 / 355	4	93323566
	200 / 400 / 450	4	93323567
	55	6	93323567
	75 / 90 / 110 / 132	6	93323560
LSV 450-350-470	55	6	93323560
	220 / 250 / 280 / 315 / 355	4	93323566
	75 / 90 / 110 / 132 / 200	4, 6	93323567
	355	4	93526159
LS 450-350-505	250 / 280 / 315 / 355	4	93323566
	400 / 450 / 500 / 560	4	93323567
	75 / 90 / 110 / 132	6	93323567
	160	6	93323566
LSV 450-350-505	160 / 250 / 280 / 315 / 355	4, 6	93323566
	75 / 90 / 110 / 132	6	93323567
	355	4	93526159
LS 500-400-435	250 / 280 / 315	4	93323566
	75 / 90 / 110 / 132	6	93323567
LSV 500-400-435	355	4	93526160
	75 / 90 / 110 / 132	6	93526161
	250 / 280 / 315 / 355	4	93526162
LS 500-400-465	110 / 132	6	93323567
	160	6	93323566
LSV 500-400-465	355	4	93526160
	110 / 132	6	93526161
	160 / 355	4, 6	93526162

Bulk - Rubber for coupling

Bulk - Rubber for coupling
89d [11]: Pins with rubber

[11] The number of pins depend on the variant.

1. Find the pump model, power and pole on the nameplate.

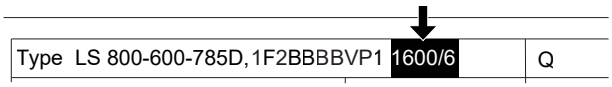

TM092029

2. Find the bulk using the values of the pump model, power, and pole.

Pump model	Power [kW]	Pole	Bulk PN
LS, LSV 125-100-375	15	6	*93323576*
	22 / 30 / 37 / 45	4	*93323576*
	15 / 18.5 / 22 / 30	4	*93323577*
LS, LSV 200-150-325	15	6	*93323576*
	22 / 30 / 37 / 45 / 55	4	*93323576*
	7.5 / 11	4 / 6	*93323577*
LS, LSV 200-150-455	All	4 / 6	*93323576*
LS, LSV 250-200-295	37 / 45	4	*93323576*
	5.5 / 7.5 / 11 / 15 / 18.5 / 22 / 30	4 / 6	*93323577*
LS, LSV 250-200-360	15 / 30 / 37	6	*93323576*
	55 / 75 / 90 / 110	4	*93323576*
	18.5 / 22	4 / 6	*93323577*
LS, LSV 300-200-460	All	4 / 6	*93323576*
LS, LSV 300-250-320	All	4 / 6	*93323576*
LS, LSV 350-250-335	All	4 / 6	*93323576*
LS, LSV 350-250-415	All	4 / 6	*93323576*
LS, LSV 350-250-436	All	4 / 6	*93323576*
LS, LSV 350-300-372	All	4 / 6	*93323576*
LS, LSV 400-300-400	All	4 / 6	*93323576*
LS, LSV 400-350-335	All	4 / 6	*93323576*
LS, LSV 400-350-345	All	4 / 6	*93323576*
LS, LSV 450-350-470	All	4 / 6	*93323576*
LS, LSV 450-350-505	160 / 220 / 250 / 280 / 315	4 / 6	*92986731*
	75 / 90 / 110 / 132	6	*93323576*
LS, LSV 500-400-435	All	4	*92986731*
LS, LSV 500-400-465	All	6	*92986731*

3.17 Kit/spare - Spacer coupling

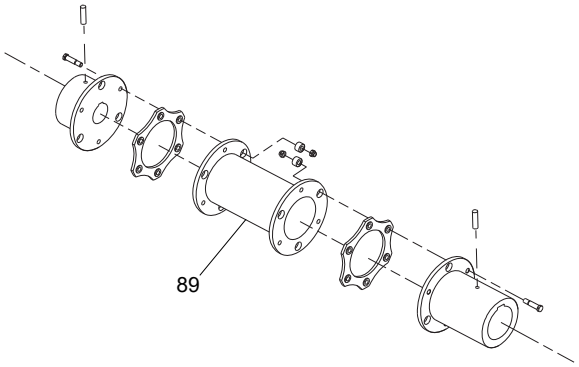

TM090308

Spacer coupling assembly

Kit - Spacer coupling
89: Coupling spacer ASSY [12]

[12] When ASSY (assembly) is mentioned, the sub-components of the kit are represented without position numbers. The kit is only shown via one position number.

The following kits/spare for sub-components of spacer coupling are also available:

Kit - Pump hub

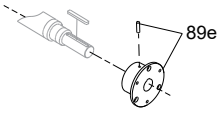

TM092002

Pump hub

Kit - Pump hub, spacer coupling
Pump hub cpl.

Content of assembly:

- Pump hub
- Set screw

Kit - Motor hub

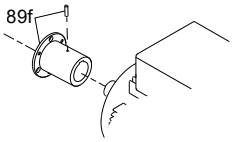

TM092003

Motor hub

Kit - Motor hub, spacer coupling
Motor hub cpl.

Content of assembly:

- Motor hub
- Set screw

Kit - Flexible disc

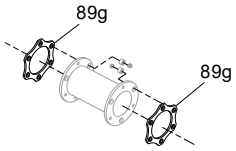

TM092004

Flexible disc

Kit - Flexible disc, spacer coupling
89g: 2 × Flexible disc

Spare - spacer

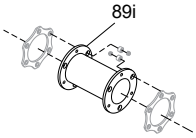

TM092005

Spacer

Spare - spacer
89i: Spacer

Kit - Fastener ASSY, spacer coupling

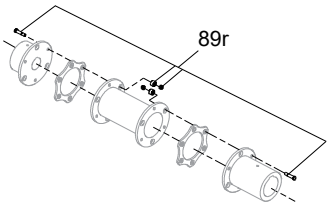

TM092086

Fastener ASSY, spacer coupling

Kit - Fastener ASSY, spacer coupling
89r: Fastener ASSY

1. Identify the coupling type via the code in type key.

TM090118

2. If the value is 4, 5, 9 or A, then it's a spacer coupling.
3. Find the pump model, including nominal diameter of inlet port, nominal diameter of outlet port and nominal impeller diameter on the nameplate.

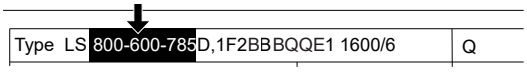

TM090300

4. Identify the power and pole on the nameplate.

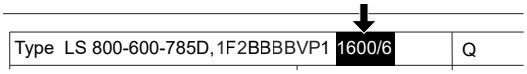

TM092029

5. Use the pump model, power and pole to find kits and spare.

Pump model	Power [kW]	Pole	Kit PN	Fastener ASSY, kit PN	Pump hub, kit PN	Motor hub, kit PN	Flexible disc, kit PN	Spacer, spare PN
LS 500-400-435 LS 500-400-465	355	4	93545945	93545965	93545928	93545954	93545937	93545945
	400 / 450 / 500 / 560	4	93545946	93545966	93545929	93545955	93545938	93545946
LS 600-450-625	560 / 630	4, 6	93545947	93545967	93545930	93545961	93545939	93545947
	800 / 900 / 1000					93545956		
	1120 / 1250 / 1400	4	93545948	93545968	93545931	93545957	93545940	93545948
	1600 / 1800	4	93545949	93545969	93545932	93545958	93545941	93545949
	2000	4	93545952	93545971	93545935	93545962	93545943	93545952
	220 / 250	6	93545950	93545970	93545933	93545959	93545942	93545950
	280 / 315 / 355/ 400	6	93545951	93545966	93545934	93545960	93545938	93545951
	450 / 500					93545955		
LS 700-500-670	560 / 630 / 710 / 800	6	93545947	93545967	93545930	93545961	93545939	93545947
	200	8	93545950	93545970	93545933	93545959	93545942	93545950
	220 / 250 / 280 / 315 / 355 / 500	6, 8	93545951	93545966	93545934	93545955	93545938	93545951
LS 700-500-730	450 / 630 / 710 / 800	6	93545947	93545967	93545930	93545961	93545939	93545947
	500 / 560 / 900 / 1000 / 1200	6, 8	93545953	93545972	93545936	93545963	93545944	93545949
	1250	6	93545949	93545969	93545932	93545964	93545941	93545951
	280 / 315 / 355 / 400	8	93545951	93545966	93545934	93545934	93545938	93545953

3.18 Kit - Coupling guard

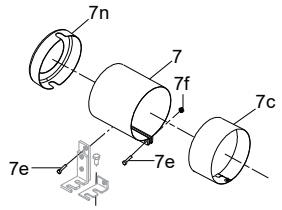

TM090669

Coupling guard - Type 1

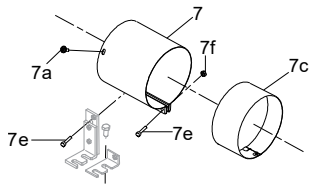

TM090670

Coupling guard - Type 2

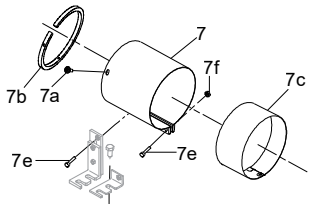

TM090831

Coupling guard - Type 3

Kit - Coupling guard - Type 1
7: 1 × Coupling guard
7c: 1 × Coupling guard inner part
7e: Needed number of hex socket head cap screw
7f: Needed number of lock nut
7n: 1 × Retainer

Kit - Coupling guard - Type 2
7: 1 × Coupling guard
7a: 1× Screw
7c: 1 × Coupling guard inner part
7e: Needed number of hex socket head cap screw
7f: Needed number of lock nut

Kit - Coupling guard - Type 3
7: 1 × Coupling guard
7a: 2 × Screw
7c: 1 × Coupling guard inner part
7b: 1 × Ring
7e: Needed number of hex socket head cap screw
7f: Needed number of lock nut
2 × Grundfos A-logo sticker

Kit - Coupling guard for LSV
7: 1 × Coupling guard
7a: 4 × Screw

Coupling guard is a safety component.

1. Find the pump model, including nominal diameter of inlet port, nominal diameter of outlet port and nominal impeller diameter on the nameplate.

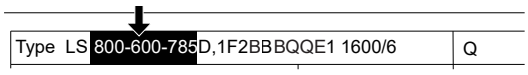

TM090300

2. Identify the power on the nameplate.

TM092029

3. Use the pump model and power to find the coupling standard kit.

Pump model	Power [kW]	Kit PN
LS 125-100-375	37 / 45	93455028
	15-30	93455031
LS 200-150-325	37-55	93455028
	15-30	93455030
	7.5-11	93455031
LS 200-150-455	30-185	93455028
	15-22	93455030
LS 250-200-295	37	93455028
	45	93455030
	7.5-30	93455031
	50	93455040
LS 250-200-360	37-110	93455028
	15 / 30	93455030
	18.5 / 22	93455031
LS 250-200-536	37-315	93455037
LS 300-200-460	30-200	93455028
	220 / 250	93455029
LS 300-250-320	15-90	93455028
LS 300-250-335	22-110	93455028
LS 350-250-415	37-220	93455037
LS 350-250-436	45-280	93455037
LS 350-300-372	45-200	93455032
	30 / 37	93455034
LS 400-300-400	75-200	93455032
	220-280	93455033
	37-55	93455034
LS 400-350-335	110 / 132	93455032
	30-90	93455034
LS 400-350-345	110-185	93455032
	37-55	93455034
LS 450-350-470	55-315	93455038
	350-450	93455039
LS 450-350-505	75-315	93455038
	355-560	93455039
LS 500-400-435	75-355	93455038
	355 / 400	93455039
LS 500-400-465	110-355	93455038
	355-560	93455039
LS 600-450-625	220-1400	93455035
	1600 / 1800	93455036
	2000	93455041

Pump model	Power [kW]	Kit PN
LS 700-500-670	200-800	93455035
LS 700-500-730	280 / 315 / 355 / 400 / 450 / 630 / 710 / 800	93455035
	500 / 560 / 900 / 1000 / 1120 / 1250	93455036

Pump model	Power [kW]	Kit PN
LSV 125-100-375	37 / 45	93526317
	15 / 18.5 / 22	93526311
	30	93526314
LSV 200-150-325	37-55	93526321
	30	93526318
	7.5 / 11 / 15 / 22	93526316
LSV 250-200-295	7.5 / 11 / 15 / 18.5 / 22	93526316
	30	93526318
	37 / 45	93526321
	50	93526345
LSV 250-200-360	15	93526316
	18.5 / 22	93526318
	30 / 37 / 45 / 55	93526321
	75 / 90	93526322
	110	93526326
LSV 250-200-536	220 / 250 / 280 / 315	93526334
	37-185	93526335
LSV 300-200-460	45 / 55 / 90	93526312
	75 / 110 / 132 / 160 / 185 / 200	93526313
	220 / 250	93526315
	30 / 37	93526340
LSV 300-250-320	30 / 45	93526323
	55	93526324
	75 / 90	93526327
	15	93526342
	18.5 / 22	93526343
LSV 300-250-335	30	93526323
	37	93526324
	110	93526325
	75 / 90	93526327
	22	93526343
LSV 350-250-415	220	93526334
	37-200	93526335
LSV 350-250-436	220 / 250 / 280	93526334
	45-200	93526335
LSV 350-300-372	37	93526328
	45 / 55 / 90	93526331
	110 / 132 / 160 / 185 / 200	93526332
	30	93526333
LSV 400-300-400	37 / 45 / 55	93526329
	160 / 185 / 200	93526330
	75 / 90	93526335
	220 / 250 / 280	93526336
LSV 400-350-335	37 / 90	93526329
	110 / 132	93526330
	30	93526333

Pump model	Power [kW]	Kit PN
LSV 400-350-345	37 / 45 / 55	93526329
	110 / 132 / 160 / 185	93526330
LSV 450-350-470	220 / 250 / 280 / 315 / 355	93526337
	75 / 90 / 110 / 132 / 200	93526339
	355	93526346
	55	93533300
LSV 450-350-505	160 / 250 / 280 / 315 / 355	93526337
	75 / 90 / 110 / 132	93526339
	355	93526346
LSV 500-400-435	250 / 280 / 315 / 355	93526338
	75 / 90 / 110 / 132	93526339
	355	93526344
LSV 500-400-465	160 / 355	93526338
	110 / 132	93526339
	355	93526346

3.19 Pump housing plugs

Note! This is only for your information. We do not offer plugs as service parts.

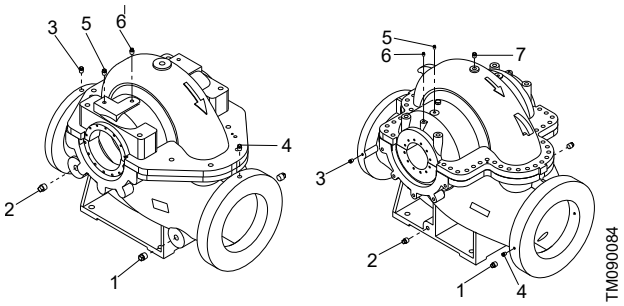

Pump housing plugs

Pos.	Description
1	Drain plug - ½" NPT
2	Plug, drain outlet - ½" NPT
3	Plug, inlet - ¼" NPT
4	Plug, outlet - ¼" NPT
5	Plug, shaft seal flushing
6	Plug, inlet chamber - ½" NPT, 1"NPT
7	Plug, cross connection - ½" NPT, 1" NPT

4. Document quality feedback

To provide feedback about this document, scan the QR-code using your phone's camera or a QR code app.

Click here to submit your feedback

A.1. Coupling

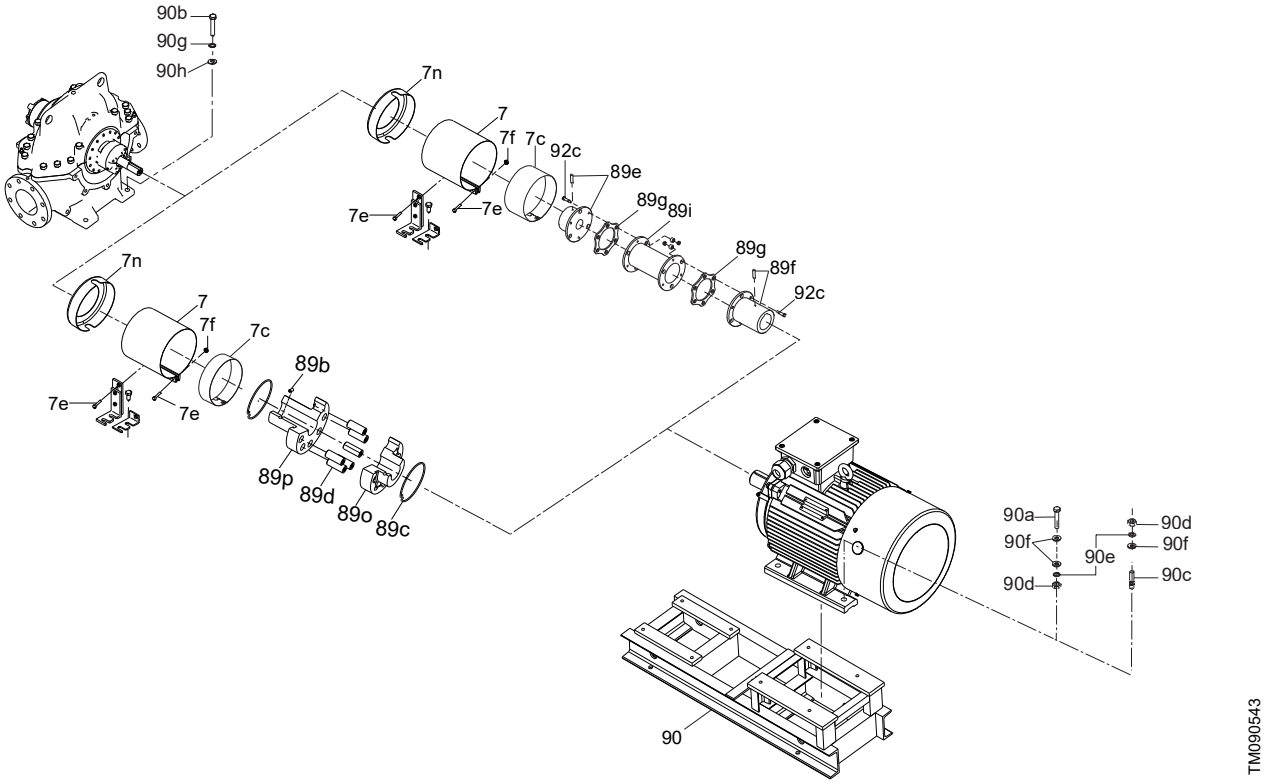

Coupling

A.2. LS without sleeve - exploded view

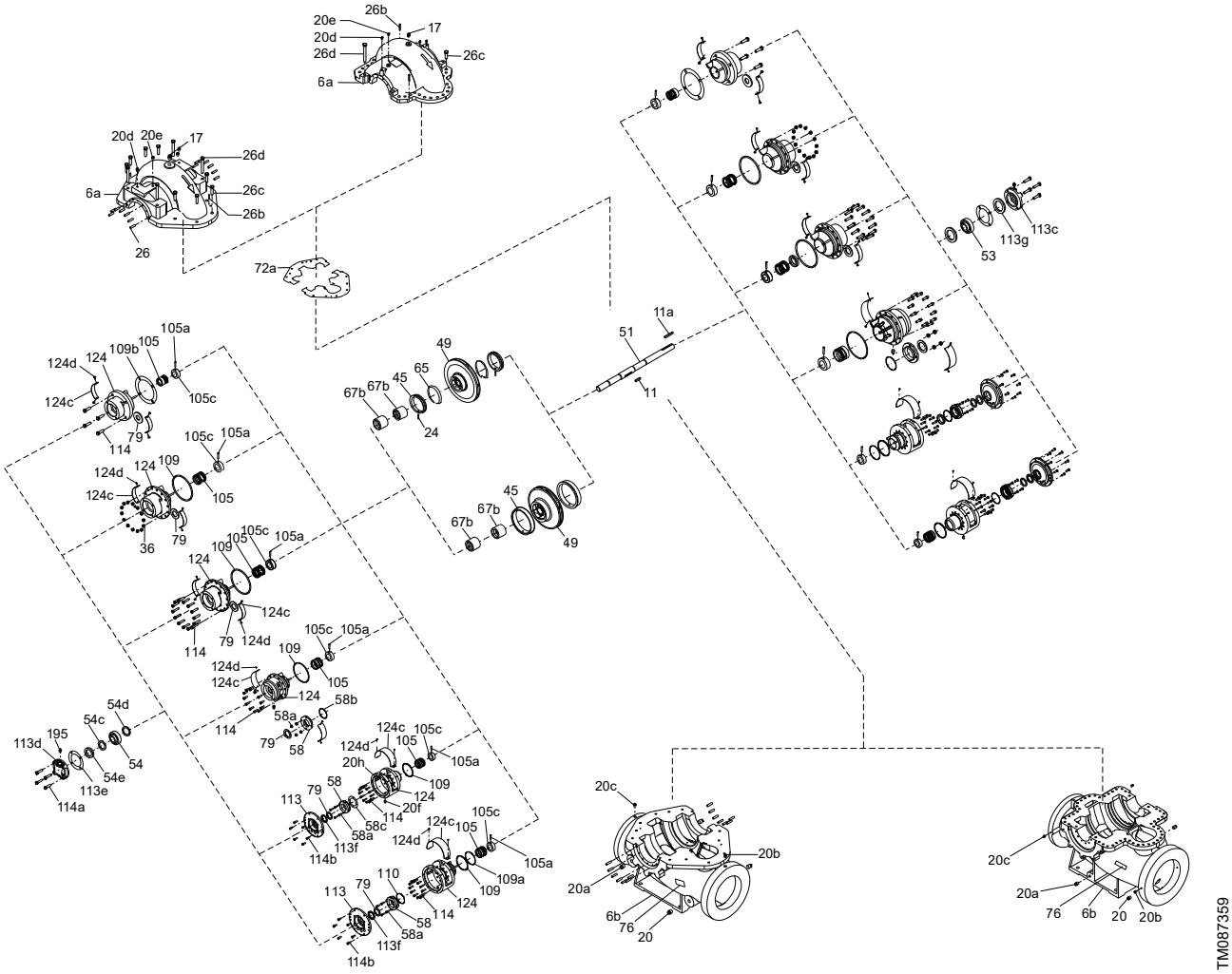

A.3. LS with sleeve - exploded view

LS with sleeve

A.4. LSV (with spacer coupling/with standard coupling)

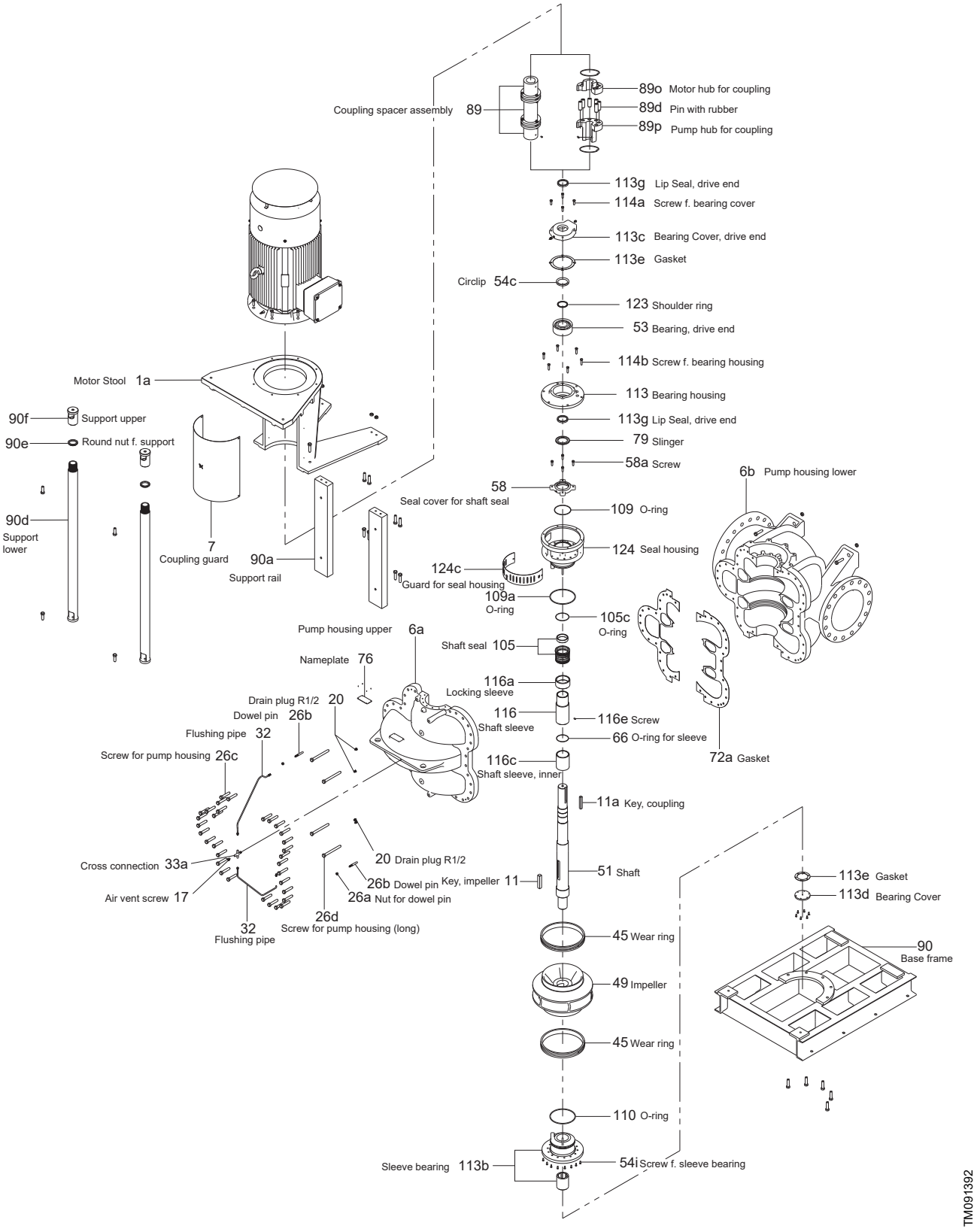

Argentina
Bombas GRUNDFOS de Argentina S.A.
Ruta Panamericana km. 37.500industin
1619 - Garín Pcia. de B.A.
Tel.: +54-3327 414 444
Fax: +54-3327 45 3190

Australia
GRUNDFOS Pumps Pty. Ltd.
P.O. Box 2040
Regency Park
South Australia 5942
Tel.: +61-8-8461-4611
Fax: +61-8-8340-0155

Austria
GRUNDFOS Pumpen Vertrieb Ges.m.b.H.
Grundfosstraße 2
A-5082 Grödig/Salzburg
Tel.: +43-6246-883-0
Fax: +43-6246-883-30

Belgium
N.V. GRUNDFOS Bellux S.A.
Boomsesteenweg 81-83
B-2630 Aartselaar
Tel.: +32-3-870 7300
Fax: +32-3-870 7301

Bosnia and Herzegovina
GRUNDFOS Sarajevo
Zmaja od Bosne 7-7A
BiH-71000 Sarajevo
Tel.: +387 33 592 480
Fax: +387 33 590 465
www.ba.grundfos.com
E-mail: grundfos@bih.net.ba

Brazil
BOMBAS GRUNDFOS DO BRASIL
Av. Humberto de Alencar Castelo Branco, 630
CEP 09850 - 300
São Bernardo do Campo - SP
Tel.: +55-11 4393 5533
Fax: +55-11 4343 5015

Bulgaria
Grundfos Bulgaria EOOD
Slatina District
Iztochna Tangenta street no. 100
BG - 1592 Sofia
Tel.: +359 2 49 22 200
Fax: +359 2 49 22 201
E-mail: bulgaria@grundfos.bg

Canada
GRUNDFOS Canada inc.
2941 Brighton Road
Oakville, Ontario
L6H 6C9
Tel.: +1-905 829 9533
Fax: +1-905 829 9512

China
GRUNDFOS Pumps (Shanghai) Co. Ltd.
10F The Hub, No. 33 Suhong Road
Minhang District
Shanghai 201106 PRC
Tel.: +86 21 612 252 22
Fax: +86 21 612 253 33

Colombia
GRUNDFOS Colombia S.A.S.
Km 1.5 vía Siberia-Cota Conj. Potrero Chico,
Parque Empresarial Arcos de Cota Bod. 1A.
Cota, Cundinamarca
Tel.: +57(1)-2913444
Fax: +57(1)-8764586

Croatia
GRUNDFOS CROATIA d.o.o.
Buzinski prilaz 38, Buzin
HR-10010 Zagreb
Tel.: +385 1 6595 400
Fax: +385 1 6595 499
www.hr.grundfos.com

Czech Republic
GRUNDFOS Sales Czechia and Slovakia s.r.o.
Čajkovského 21
779 00 Olomouc
Tel.: +420-585-716 111

Denmark
GRUNDFOS DK A/S
Martin Bachs Vej 3
DK-8850 Bjerringbro
Tel.: +45-87 50 50 50
Fax: +45-87 50 51 51
E-mail: info_GDK@grundfos.com
www.grundfos.com/DK

Estonia
GRUNDFOS Pumps Eesti OÜ
Peterburi tee 92G
11415 Tallinn
Tel.: + 372 606 1690
Fax: + 372 606 1691

Finland
OY GRUNDFOS Pumput AB
Trukkikuja 1
FI-01360 Vantaa
Tel.: +358-(0) 207 889 500

France
Pompes GRUNDFOS Distribution S.A.
Parc d'Activités de Chesnes
57, rue de Malacombe
F-38290 St. Quentin Fallavier (Lyon)
Tel.: +33-4 74 82 15 15
Fax: +33-4 74 94 10 51

Germany
GRUNDFOS GMBH
Schlüterstr. 33
40699 Erkrath
Tel.: +49-(0) 211 929 69-0
Fax: +49-(0) 211 929 69-3799
E-mail: infoservice@grundfos.de
Service in Deutschland:
kundendienst@grundfos.de

Greece
GRUNDFOS Hellas A.E.B.E.
20th km. Athinon-Markopoulou Av.
P.O. Box 71
GR-19002 Peania
Tel.: +0030-210-66 83 400
Fax: +0030-210-66 46 273

Hong Kong
GRUNDFOS Pumps (Hong Kong) Ltd.
Unit 1, Ground floor, Siu Wai industrial Centre
29-33 Wing Hong Street & 68 King Lam Street, Cheung Sha Wan
Kowloon
Tel.: +852-27861706 / 27861741
Fax: +852-27858664

Hungary
GRUNDFOS South East Europe Kft.
Tópark u. 8
H-2045 Törökbálint
Tel.: +36-23 511 110
Fax: +36-23 511 111

India
GRUNDFOS Pumps India Private Limited
118 Old Mahabalipuram Road
Thoraipakkam
Chennai 600 097
Tel.: +91-44 2496 6800

Indonesia
PT GRUNDFOS Pompa
Graha intirub Lt. 2 & 3
Jln. Cililitan Besar No.454. Makasar, Jakarta Timur
ID-Jakarta 13650
Tel.: +62 21-469-51900
Fax: +62 21-460 6910 / 460 6901

Ireland
GRUNDFOS (Ireland) Ltd.
Unit A, Merrywell Business Park
Ballymount Road Lower
Dublin 12
Tel.: +353-1-4089 800
Fax: +353-1-4089 830

Italy
GRUNDFOS Pompe Italia S.r.l.
Via Gran Sasso 4
I-20060 Truccazzano (Milano)
Tel.: +39-02-95838112
Fax: +39-02-95309290 / 95838461

Japan
GRUNDFOS Pumps K.K.
1-2-3, Shin-Miyakoda, Kita-ku
Hamamatsu
431-2103 Japan
Tel.: +81 53 428 4760
Fax: +81 53 428 5005

Kazakhstan
Grundfos Kazakhstan LLP
7' Kyz-Zhibek Str., Kok-Tobe micr.
KZ-050020 Almaty Kazakhstan
Tel.: +7 (727) 227-98-55/56

Korea
GRUNDFOS Pumps Korea Ltd.
6th Floor, Aju Building 679-5
Yeoksam-dong, Kangnam-ku, 135-916
Seoul, Korea
Tel.: +82-2-5317 600
Fax: +82-2-5633 725

Latvia
SIA GRUNDFOS Pumps Latvia
Deglava biznesa centrs
Augusta Deglava ielā 60
LV-1035, Rīga,
Tel.: + 371 714 9640, 7 149 641
Fax: + 371 914 9646

Lithuania
GRUNDFOS Pumps UAB
Smolensko g. 6
LT-03201 Vilnius
Tel.: + 370 52 395 430
Fax: + 370 52 395 431

Malaysia
GRUNDFOS Pumps Sdn. Bhd.
7 Jalan Peguam U1/25
Glenmarie industrial Park
40150 Shah Alam, Selangor
Tel.: +60-3-5569 2922
Fax: +60-3-5569 2866

Mexico
Bombas GRUNDFOS de México S.A. de C.V.
Boulevard TLC No. 15
Parque industrial Stiva Aeropuerto
Apodaca, N.L. 66600
Tel.: +52-81-8144 4000
Fax: +52-81-8144 4010

Netherlands
GRUNDFOS Netherlands
Veluwezoom 35
1326 AE Almere
Postbus 22015
1302 CA ALMERE
Tel.: +31-88-478 6336
Fax: +31-88-478 6332
E-mail: info_gnl@grundfos.com

New Zealand
GRUNDFOS Pumps NZ Ltd.
17 Beatrice Tinsley Crescent
North Harbour Industrial Estate
Albany, Auckland
Tel.: +64-9-415 3240
Fax: +64-9-415 3250

Norway
GRUNDFOS Pumper A/S
Strømsveien 344
Postboks 235, Leirdal
N-1011 Oslo
Tel.: +47-22 90 47 00
Fax: +47-22 32 21 50

Poland
GRUNDFOS Pompy Sp. z o.o.
ul. Klonowa 23
Baranowo k. Poznania
PL-62-081 Przeźmierowo
Tel.: (+48-61) 650 13 00
Fax: (+48-61) 650 13 50

Portugal
Bombas GRUNDFOS Portugal, S.A.
Rua Calvet de Magalhães, 241
Apartado 1079
P-2770-153 Paço de Arcos
Tel.: +351-21-440 76 00
Fax: +351-21-440 76 90

Romania
GRUNDFOS Pompe România SRL
S-PARK BUSINESS CENTER, Clădirea A2, etaj 2
Str. Tipografilor, Nr. 11-15, Sector 1, Cod 013714
Bucuresti, Romania
Tel.: 004 021 2004 100
E-mail: romania@grundfos.ro

Serbia
Grundfos Srbija d.o.o.
Omladinskih brigada 90b
11070 Novi Beograd
Tel.: +381 11 2258 740
Fax: +381 11 2281 769
www.rs.grundfos.com

Singapore
GRUNDFOS (Singapore) Pte. Ltd.
25 Jalan Tukang
Singapore 619264
Tel.: +65-6681 9688
Faxax: +65-6681 9689

Slovakia
GRUNDFOS s.r.o.
Prievozská 4D 821 09 BRATISLAVA
Tel.: +421 2 5020 1426
sk.grundfos.com

Slovenia
GRUNDFOS LJUBLJANA, d.o.o.
Leskoškova 9e, 1122 Ljubljana
Tel.: +386 (0) 1 568 06 10
Fax: +386 (0)1 568 06 19
E-mail: tehnika-si@grundfos.com

South Africa
GRUNDFOS (PTY) LTD
16 Lascelles Drive, Meadowbrook Estate
1609 Germiston, Johannesburg
Tel.: (+27) 10 248 6000
Fax: (+27) 10 248 6002
E-mail: lgradidge@grundfos.com

Spain
Bombas GRUNDFOS España S.A.
Camino de la Fuentecilla, s/n
E-28110 Algete (Madrid)
Tel.: +34-91-848 8800
Fax: +34-91-628 0465

Sweden
GRUNDFOS AB
Box 333 (Lunnagårdsgatan 6)
431 24 Mölndal
Tel.: +46 31 332 23 000
Fax: +46 31 331 94 60

Switzerland
GRUNDFOS Pumpen AG
Bruggacherstrasse 10
CH-8117 Fällanden/ZH
Tel.: +41-44-806 8111
Fax: +41-44-806 8115

Taiwan
GRUNDFOS Pumps (Taiwan) Ltd.
7 Floor, 219 Min-Chuan Road
Taichung, Taiwan, R.O.C.
Tel.: +886-4-2305 0868
Fax: +886-4-2305 0878

Thailand
GRUNDFOS (Thailand) Ltd.
92 Chaloem Phrakiat Rama 9 Road
Dokmai, Pravej, Bangkok 10250
Tel.: +66-2-725 8999
Fax: +66-2-725 8998

Turkey
GRUNDFOS POMPA San. ve Tic. Ltd. Sti.
Gebze Organize Sanayi Bölgesi
Ihsan dede Caddesi
2. yol 200. Sokak No. 204
41490 Gebze/ Kocaeli
Tel.: +90 - 262-679 7979
Fax: +90 - 262-679 7905
E-mail: satis@grundfos.com

Ukraine
ТОВ "ГРУНДФОС УКРАЇНА"
Бізнес Центр Європа
Столичне шосе, 103
м. Київ, 03131, Україна
Tel.: (+38 044) 237 04 00
Fax: (+38 044) 237 04 01
E-mail: ukraine@grundfos.com

United Arab Emirates
GRUNDFOS Gulf Distribution
P.O. Box 16768
Jebel Ali Free Zone, Dubai
Tel.: +971 4 8815 166
Fax: +971 4 8815 136

United Kingdom
GRUNDFOS Pumps Ltd.
Grovebury Road
Leighton Buzzard/Beds. LU7 4TL
Tel.: +44-1525-850000
Fax: +44-1525-850011

U.S.A.
Global Headquarters for WU
856 Koomey Road
Brookshire, Texas 77423 USA
Phone: +1-630-236-5500

Uzbekistan
Grundfos Tashkent, Uzbekistan
The Representative Office of Grundfos Kazakhstan in Uzbekistan
38a, Oybek street, Tashkent
Tel.: (+998) 71 150 3290 / 71 150 3291
Fax: (+998) 71 150 3292

Trademarks displayed in this material, including but not limited to Grundfos and the Grundfos logo, are registered trademarks owned by The Grundfos Group. © 2026 Grundfos Holding A/S, all rights reserved.

93341913 **01.2026**
ECM: 1442955

GRUNDFOS Holding A/S
Poul Due Jensens Vej 7
DK-8850 Bjerringbro
Tel: +45 87 50 14 00
www.grundfos.com

GRUNDFOS