SL1.50 / SLV.65 / DP10 / EF30

0.9-1.5 kW / 0.9-2.6 kW / 0.6-1.5 kW

Installation and operating instructions

GRUNDFOS

SL1.50 / SLV.65 / DP10 / EF30

English (GB)
Installation and operating instructions 4
Appendix A. 34

Original installation and operating instructions

Table of contents

1. General information 4
1.1 General information 4
1.2 Hazard statements 4
1.3 Notes 5

2. Product introduction 6
2.1 Product description 6
2.2 Pumped liquids 8
2.3 Intended use 8
2.4 Identification. 8
2.5 Approvals 11
2.6 Potentially explosive environments. 12

3. Receiving the product. 12
3.1 Transporting the product 12
3.2 Handling the product 13
3.3 Lifting the product. 13

4. Installing the product 14
4.1 Mechanical installation 14

5. Electrical connection 18
5.1 Wiring diagrams. 19
5.2 Protection and control functions 19
5.3 Frequency converter operation 20

6. Startup 21
6.1 Operating modes 22
6.2 Start and stop levels 23
6.3 Direction of rotation 23
6.4 Starting up the product 24
6.5 Resetting the pump 24

7. Maintenance and service 25
7.1 Contaminated pumps 26
7.2 Maintenance schedule 26
7.3 Oil check and change. 26
7.4 Adjusting the impeller clearance 27
7.5 Cleaning the pump housing 27
7.6 Checking or replacing the shaft seal 28
7.7 Service kits 29

8. Storage 29

9. Fault finding the product 30
9.1 The pump does not start. The fuses blow or the motor-protective circuit breaker trips out immediately. Caution: Do not start again! 30
9.2 The pump starts, but the motor-protective circuit breaker trips after a short time. 30
9.3 The thermal switch trips after the pump is running for some time. 30
9.4 The pump operates at below-standard performance and power consumption. 31
9.5 The pump operates but delivers no liquid. . . 31

10. Technical data 32
10.1 Operating mode. 32
10.2 Electrical data 32

11. Disposing of the product 33

12. Document quality feedback 33

1. General information

1.1 General information

Read this document before you install the product. Installation and operation must comply with local regulations and accepted codes of good practice.

This appliance shall not be used by children.

Children shall not play with the appliance.

Cleaning and user maintenance shall not be carried out by children.

Appliances can be used by persons with reduced physical, sensory, or mental capabilities, as well as persons with a lack of experience and knowledge. This requires that they are given supervision or instruction concerning the use of the appliance in a safe way and that they understand the hazards involved.

1.2 Hazard statements

The symbols and hazard statements below may appear in Grundfos installation and operating instructions, safety instructions and service instructions.

DANGER

Indicates a hazardous situation which, if not avoided, will result in death or serious personal injury.

WARNING

Indicates a hazardous situation which, if not avoided, could result in death or serious personal injury.

CAUTION

Indicates a hazardous situation which, if not avoided, could result in minor or moderate personal injury.

The hazard statements are structured in the following way:

SIGNAL WORD

Description of the hazard

Consequence of ignoring the warning

- Action to avoid the hazard.

1.3 Notes

The symbols and notes below may appear in Grundfos installation and operating instructions, safety instructions and service instructions.

Observe these instructions for explosion-proof products.

A blue or grey circle with a white graphical symbol indicates that an action must be taken.

A red or grey circle with a diagonal bar, possibly with a black graphical symbol, indicates that an action must not be taken or must be stopped.

If these instructions are not observed, it may result in malfunction or damage to the equipment.

Tips and advice that make the work easier.

2. Product introduction

2.1 Product description

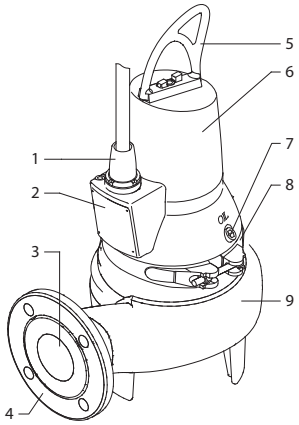

SL1.50.65 and SLV.65.65 pumps

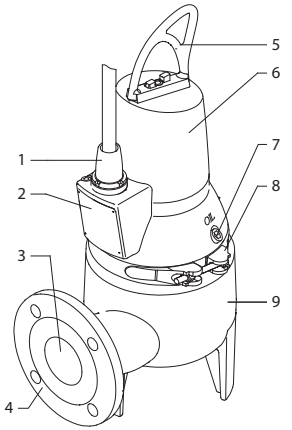

SLV.65.65 pump

Pos.	Description
1	Cable plug
2	Nameplate
3	Outlet port
4	Outlet flange DN 65, PN 10
5	Lifting bracket
6	Stator housing
7	Oil screw
8	Clamp
9	Pump housing

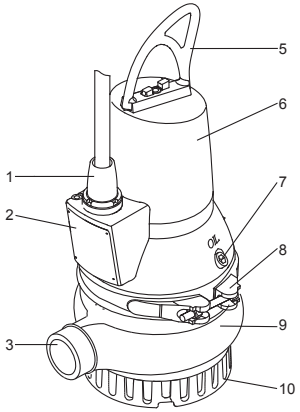

TM065981

DP10.50 pump

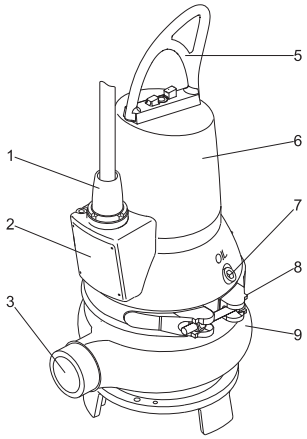

TM065906

EF30.50 pump

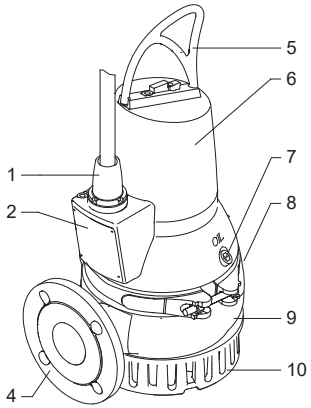

TM065885

DP10.65 pump

Pos.	Description
1	Cable plug
2	Nameplate
3	Outlet
4	Outlet flange DN 65, PN 10
5	Lifting bracket
6	Stator housing
7	Oil screw
8	Clamp
9	Pump housing
10	Inlet strainer (DP pumps only)

2.2 Pumped liquids

SL1.50.65

The product is designed for pumping the following liquids:

- large quantities of drainage and surface water
- domestic wastewater with discharge from toilets
- wastewater from commercial buildings without discharge from toilets
- industrial wastewater containing sludge
- industrial process water.

SLV.65.65

The product is designed for pumping the following liquids:

- surface water with abrasive particles
- municipal sewage
- sewage from commercial buildings
- industrial wastewater containing sludge or fibre.

DP10

The product is designed for pumping the following liquids:

- drainage and surface water
- groundwater
- industrial process water without solids or fibres.

EF30

The product is designed for pumping the following liquids:

- drainage and surface water with small impurities
- wastewater with fibres, such as from laundries
- wastewater without discharge from toilets
- effluent from commercial buildings without discharge from toilets.

2.3 Intended use

The compact design makes the pumps suitable for both temporary and permanent installation.

The pumps can be installed on an auto-coupling system or stand freely on the bottom of a pit.

The pumps are portable and designed for pumping domestic and industrial sewage and wastewater.

2.4 Identification

2.4.1 Nameplate

Fix the extra nameplate supplied with the pump at the installation site or keep it in the cover of this manual.

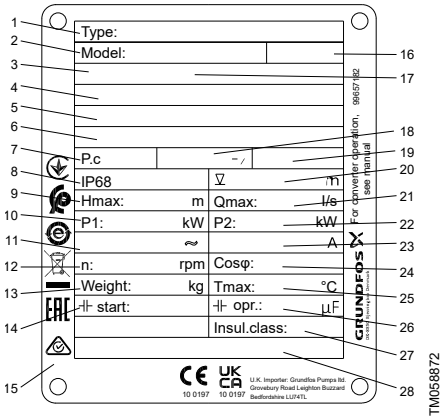

Nameplate

Pos.	Description
1	Type designation
2	Product number
3	Approval
4	ATEX certificate number
5	UKEX certification number
6	IEC Ex certificate number
7	Production code, year and week
8	Enclosure class according to IEC 60529
9	Maximum head [m]
10	Rated input power [kW]
11	Rated voltage
12	Speed [rpm]
13	Net weight [kg]
14	Start capacitor [µF]
15	Room for approval and information logos
16	Safety instructions, publication number
17	Ex description
18	Frequency [Hz]
19	AUTOADAPT Y/N
20	Maximum installation depth [m]
21	Maximum flow rate [l/s]

Pos.	Description
22	Rated power output [kW]
23	Rated current [A]
24	Cos φ, 1/1 load
25	Maximum liquid temperature [°C]
26	Run capacitor [µF]
27	Insulation class
28	Production site and country

2.4.2 Type key SL1.50, SLV.65

Example: SL1.50.11.A.2.1.5.02.

Code	Description	Explanation
SL	Grundfos sewage and wastewater pumps	Pump type
1	Single-channel impeller	Impeller type
V	Free-flow impeller (SuperVortex)	
50	Maximum solids size 50 = 50 mm	Pump passage
65	Nominal diameter of the pump outlet port 65 = 65 mm	Pump outlet
11	Output power P2 11 = 1.1 kW	Power [kW]
[ ]	Standard	Equipment
[ ]	Standard version	Pump version
Ex	Explosion-proof pump	
2	2-pole	Number of poles
1	Single-phase motor	Number of phases
[ ]	Three-phase motor	
5	50 Hz	Frequency [Hz] 1)
02	230 V, DOL	Voltage and starting method
0B	400-415 V, DOL	
0C	230-240 V, DOL	
[ ]	1st generation	Generation 2)
A	2nd generation	
B	3rd generation	
[ ]	Standard	Pump material
Z	Custom-built products	Customisation

1) Maximum frequency in case of frequency converter operation.

2) The pumps in the individual generations differ in design but are similar in terms of power rating.

2.4.3 Type key DP10, EF30

Example: DP10.50.15.2.1.502

Code	Description	Explanation
DP	Grundfos drainage pump	Pump type
EF	Grundfos effluent pump	
10	Maximum solids size 10 = 10 mm	Pump passage
50	Nominal outlet diameter 50 = 50 mm	Pump outlet
15	Output power P2 15 = 1.5 kW	Power [kW]
[ ]	Standard	Equipment
[ ]	Standard version	Pump version
Ex	Explosion-proof pump	
2	2-pole	Number of poles
1	Single-phase motor	Number of phases
[ ]	Three-phase motor	
5	50 Hz	Frequency [Hz] 1)
02	230 V, DOL	Voltage and starting method
0B	400-415 V, DOL	
0C	230-240 V, DOL	
[ ]	1st generation	Generation 2)
A	2nd generation	
B	3rd generation	
[ ]	Standard	Pump material
Z	Custom-built products	Customisation

1) Maximum frequency in case of frequency converter operation.

2) The pumps in the individual generations differ in design but are similar in terms of power rating.

2.5 Approvals

The standard version of SL1, SLV, DP, and EF pumps is tested by VDE according to the Low Voltage Directive and approved by TÜV Rheinland LGA according to Construction Product Regulation.

The explosion-proof version is approved by DEKRA.

2.5.1 Europe

The explosion protection classification of the pumps is Europe & UK, CE 0344, UKCA 8505 Ⓔx II 2 G Ex db IIB T4/T3 Gb.

Directive or standard	Code		Description
ATEX & UKEX	CE 0344	=	CE marking of conformity according to the ATEX Directive 2014/34/EU. 0344 is the number of the notified body that has certified the quality system for ATEX.
	UKEX 8505	=	UKEX marking of conformity according to the UKEX Regulation 2016, UKSI 2016:1107. 8505 is the number of the approved body that has certified the quality system for UKEX.
	Ⓔx	=	Explosion protection mark.
	II	=	Equipment group according to the ATEX Directive/UKEX Regulation, defining the requirements applicable to the equipment in this group.
	2	=	Equipment category according to the ATEX Directive/UKEX Regulation, defining the requirements applicable to the equipment in this category.
	G	=	Explosive atmosphere caused by gases, vapours or mists.
International (IEC) Standards	Ex	=	Explosion protection marking.
	db	=	Flameproof enclosure according to IEC 60079-1.
	IIB	=	Classification of gases, see IEC 60079-0. Gas group B includes gas group A.
	T3	=	The maximum surface temperature of the motor is 200 °C.
	T4	=	The maximum surface temperature of the motor is 135 °C.
	Gb	=	Equipment for explosive gas with "high" level of protection.

2.5.2 International (IEC)

For IEC countries, such as Australia, the pumps also have certificates by IEC standards, IECEx 18.0038X approved by DEKRA: Ex db IIB T4/T3 Gb.

2.6 Potentially explosive environments

Use explosion-proof pumps for applications in potentially explosive environments.

The pumps must under no circumstances pump combustible or flammable liquids.

The classification of the installation site must be approved according to local regulations.

Before the first startup and after a long standstill period, make sure that the pump is filled with the pumped liquid.

The letter X in the certificate number indicates that the equipment is subject to special conditions for safe use. The conditions are mentioned in the certificate and in these installation and operating instructions.

Special conditions for safe use of explosion-proof pumps:

1. Bolts used for replacement must be class A2-70 or better according to EN/ISO 3506-1.
2. The pump must not run dry. The level of the pumped liquid must be controlled by two stop-level switches connected to the motor control circuit. The minimum level is always at the top of the motor.
3. Make sure the permanently attached cable is mechanically protected and terminated in a suitable terminal board placed outside the potentially explosive area. The power cable plug may only be disconnected by the manufacturer or his representative.
4. The thermal protection in the stator windings has a rated cut-out temperature of 150 °C guaranteeing the disconnection of the power supply. The power supply must be reset manually.
5. The IP68 rating is limited to a maximum of 10 m submersion depth.
6. The temperature range is limited to -20 to +40 °C for ambient temperature and 0-40 °C for liquids.
7. Contact the manufacturer regarding the "d" protection type for pumps and for information on the dimensions of the flameproof joints.
8. The lock nut of the cable connector must only be replaced with an identical one.

Related information

6.1 Operating modes

3. Receiving the product

The pump may be transported and stored in a vertical or horizontal position. Make sure that it cannot roll or fall over.

3.1 Transporting the product

The pump may be transported and stored in a vertical or horizontal position.

CAUTION
Crushing hazard
Minor or moderate personal injury

- Make sure the pump cannot roll or fall over.

3.2 Handling the product

All lifting equipment must be rated for the purpose and checked for damage before lifting the pump. The lifting equipment rating must not be exceeded. The pump weight is stated on the nameplate.

WARNING
Crushing hazard
Death or serious personal injury

- Do not stack pump packages or pallets on top of each other when lifting or moving them.
- Always lift the pump by its lifting bracket or by a forklift truck if the pump is fixed on a pallet. Never lift the pump by the power cable, hose, or pipe.

CAUTION
Sharp element
Minor or moderate personal injury

- Wear protective gloves when opening the pump package.

Keep the cable end protectors in storage for later use.

Related information

3.3 Lifting the product

3.3 Lifting the product

WARNING
Crushing of hands
Death or serious personal injury

- When lifting the pump, make sure your hand cannot be caught between the lifting bracket and the hook.

CAUTION
Crushing hazard
Minor or moderate personal injury

- Make sure that the hook is fixed properly to the lifting bracket.
- Always lift the pump by its lifting bracket or by a forklift truck if the pump is fixed on a pallet.
- Never lift the pump by the power cable, hose, or pipe.
- Make sure that the lifting bracket is tightened before lifting the pump.

When lifting the pump, use the right lifting point to keep the pump balanced.

Place the lifting chain hook in point A for auto-coupling installations and in point B for other installations.

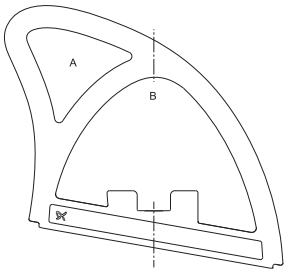

TM060066

Lifting points

Carelessness during lifting or transport may cause personal injury or damage to the pump.

4. Installing the product

Do not install the pump more than 2000 metres above sea level.

Pump installation in pits must be carried out by specially trained persons.

Work in or near pits must be carried out according to local regulations.

Persons must not work in the installation area when the atmosphere is explosive.

Compliance with the standard EN 60079-14 is a customer responsibility.

The pump must be installed in a vertical position, in both auto-coupling or free-standing submerged installation.

DANGER
Electric shock
Death or serious personal injury
- It must be possible to lock the main switch in position 0. Type and requirements as specified in EN 60204-1.

DANGER
Electric shock
Death or serious personal injury
- Make sure there is at least 3 m free cable above the maximum liquid level.

For safety reasons, all work in pits must be supervised by a person outside the pit.

Carry out all maintenance and service work when the pump is placed outside the pit.

DANGER
Crushing hazard
Death or serious personal injury
- Make sure that the lifting bracket is tightened before lifting the pump.

Carelessness during lifting or transport may cause personal injury or damage to the pump.

4.1 Mechanical installation

The compact design makes the pumps suitable for both temporary and permanent installations. The pumps can be installed on an auto-coupling system or stand freely on the bottom of the pit.

Make sure the pit bottom is even before installing the product.

DANGER
Electric shock
Death or serious personal injury
- Switch off the power supply and lock the main switch in position 0.
- Switch off any external voltage connected to the product before working on it.

CAUTION
Hot surface
Minor or moderate personal injury
- Make sure that the pump has cooled down before touching it.

DANGER
Electric shock
Death or serious personal injury
- Before installing the pump and starting it up for the first time, check the power cable for visible defects to avoid short circuits.

CAUTION
Biological hazard
Minor or moderate personal injury
- Flush the pump thoroughly with clean water and rinse the pump parts after dismantling. Pits for submersible sewage and wastewater pumps may contain toxic and/or contagious substances.
- Wear appropriate personal protective equipment and clothing.
- Observe the local hygiene regulations in force.

CAUTION
Sharp element
Minor or moderate personal injury
- Do not touch the sharp edges of the impeller without wearing protective gloves.

Fit the extra nameplate supplied with the pump at the installation site or keep it in the cover of this manual.

Observe all safety regulations at the installation site.

Check the oil level in the oil chamber before installing the pump.

The pumps are suitable for different installation types

The pump housings have a cast iron Rp 2 threaded connection or a DN 65, PN 10 outlet flange.

The pumps are designed for intermittent operation. When completely submerged in the pumped liquid, the pumps can also operate continuously.

Always use Grundfos accessories to avoid malfunction due to incorrect installation.

Only use the lifting bracket for lifting the pump. Do not use it to hold the pump during operation.

CAUTION
Crushing of hands
Minor or moderate personal injury

- Do not put your hands or any tool into the pump inlet or outlet port after the pump is connected to the power supply unless the pump is switched off by removing the fuses or switching off the main switch.
- Make sure that the power supply cannot be switched on unintentionally.

CAUTION
Biological hazard
Minor or moderate personal injury

- Make sure to seal the pump outlet properly when fitting the outlet pipe, otherwise water might spray out of the sealing.

Related information

4.1.1 Installation on auto coupling
4.1.2 Free-standing submerged installation
7.3 Oil check and change
7.7 Service kits

4.1.1 Installation on auto coupling

Pumps for permanent installation can be installed on a stationary auto-coupling system. Additionally, the DP and EF pumps can be also installed on a hookup auto-coupling system.

The auto-coupling system facilitates maintenance and service as the pump can easily be lifted out of the pit.

DP10.65.26 pumps have a cast iron DN 65, PN 10 outlet flange, and cannot be installed on a hookup auto coupling.

Before installation, make sure that the atmosphere in the pit is not potentially explosive.

Use loose flanges to ease the installation and to avoid pipe tension at flanges and bolts.

Make sure that the pipes are installed without the use of undue force. No loads from the weight of the pipes must be carried by the pump.

Do not use elastic elements or bellows in the pipes. Never use these elements to align the pipes.

Auto-coupling guide-rail system

See the Appendix.

Proceed as follows:

1. Drill mounting holes for the guide-rail bracket on the inside of the pit and fasten the guide-rail bracket with two anchor bolts.
2. Place the auto-coupling base unit on the bottom of the pit. Use a plumb line to establish the correct positioning. Fasten the auto coupling with anchor bolts. If the bottom of the pit is uneven, the auto-coupling base unit must be supported so that it is level when fastened.
3. Assemble the outlet line in accordance with the generally accepted procedures and without exposing the line to distortion or tension.
4. Insert the guide rails in the auto-coupling base unit and adjust the length of the rails accurately to the guide-rail bracket at the top of the pit.
5. Unscrew the provisionally fastened guide-rail bracket, fit it on top of the guide rails and finally fasten it firmly to the pit wall.

   The guide rails must not have any axial play as this would cause noise during operation.

6. Before lowering the pump, clean out debris from the pit.
7. Fit the guide claw to the pump outlet. Grease the gasket of the guide claw before lowering the pump into the pit.

8. Slide the guide claw between the guide rails and lower the pump into the pit by a chain secured to the lifting bracket. (See fig. Lowering the pump to the auto-coupling base.) When the pump reaches the auto-coupling base unit, the pump automatically connects.

   ! When the pump reaches the auto-coupling base unit, shake the pump by the chain to make sure that it is placed in the correct position. (See fig. Connecting the pump to the auto-coupling base.)

9. Hang up the end of the chain on a suitable hook at the top of the pit so the chain cannot come into contact with the pump housing. Make sure that the chain is straight but not strained.

10. Adjust the length of the power cable by coiling it up on a relief fitting to ensure that the cable is not damaged during operation. Fasten the relief fitting to a suitable hook at the top of the pit. Make sure that the cables are not sharply bent or pinched.

11. Connect the power- and control cables, if any.

    ! The free end of the cable must not be submerged as water may penetrate through the cable into the motor.

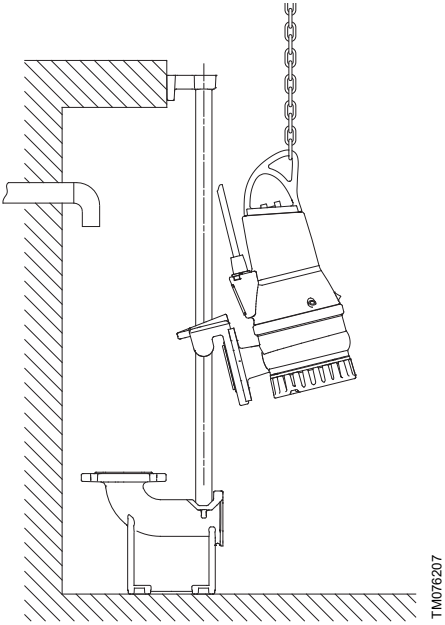

Lowering the pump to the auto-coupling base

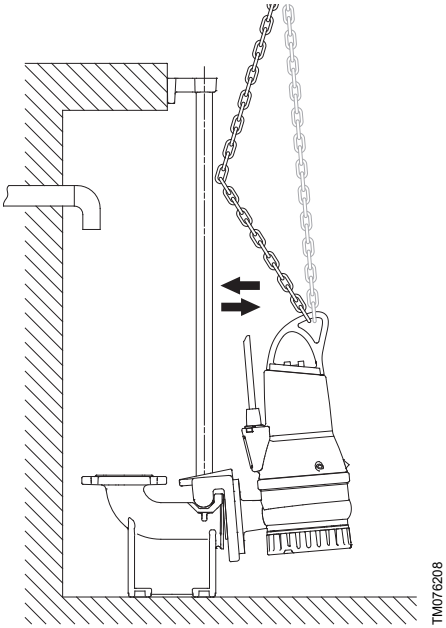

Connecting the pump to the auto-coupling base

Related information

A.1. Appendix

Hookup auto-coupling system

See the Appendix.

Proceed as follows:

1. Fit the crossbar in the pit.
2. Fit the stationary part of the auto coupling on top of the crossbar.
3. Fit the adapted piece of pipe for the movable part of the hookup auto coupling to the pump outlet.
4. Fasten a shackle and a chain to the movable part of the hookup auto coupling.
5. Clean out debris from the pit before lowering the pump.
6. Lower the pump into the pit by the chain secured to the lifting bracket. When the movable part of the auto coupling reaches the stationary part, the two connect automatically.
7. Hang up the end of the chain on a suitable hook at the top of the pit so the chain cannot come into contact with the pump housing.

8. Adjust the length of the power cable by coiling it up on a relief fitting to ensure that the cable is not damaged during operation. Fasten the relief fitting to a suitable hook at the top of the pit. Ensure that the coiled cable cannot fall into the pit. Make sure that the cables are not sharply bent or pinched.
9. Connect the power- and control cables, if any.

> **!** The free end of the cable must not be submerged as water may penetrate through the cable into the motor.

Related information

A.1. Appendix

4.1.2 Free-standing submerged installation

Pumps for free-standing submerged installation can stand freely on the bottom of the pit or similar location. See the Appendix.

SL pumps must be mounted on separate feet (accessory).

Fit a flexible union or coupling to the outlet line for easy separation to service the pump.

If a hose is used, make sure that it does not buckle and that the inside diameter of the hose matches the pump outlet port.

If a rigid pipe is used, fit the union or coupling, non-return valve, and isolating valve in this order.

If the pump is installed in muddy conditions or on uneven ground, place it on bricks or similar support.

Proceed as follows:

1. Fit a 90° elbow to the pump outlet and connect the outlet pipe or hose.
2. Lower the pump into the liquid by a chain secured to the lifting bracket. Place the pump on a plain, solid foundation. Make sure that the pump is lifted by the chain and not the power cable.
3. Hang up the end of the chain on a suitable hook at the top of the pit so the chain cannot come into contact with the pump housing.
4. Adjust the length of the power cable by coiling it up on a relief fitting to ensure that the cable is not damaged during operation. Fasten the relief fitting to a suitable hook at the top of the pit. Make sure that the cables are not sharply bent or pinched.
5. Connect the power- and the control cables, if any.

> **!** The free end of the cable must not be submerged as water may penetrate through the cable into the motor.

> **!** If several pumps are installed in the same pit, the pumps must be installed at the same level to allow optimum pump alternation.

Related information

A.1. Appendix

5. Electrical connection

Make sure that the electrical connection complies with the local regulations.

DANGER
Electric shock
Death or serious personal injury

- Connect the pump to an external main switch which ensures all-pole disconnection with a contact separation according to EN 60204-1.
- It must be possible to lock the main switch in position 0. Type and requirements as specified in EN 60204-1.

Connect the pumps to a control unit with a motor protection relay with IEC trip class 10 or 15.

Pumps to be installed in potentially explosive locations must be connected to a control unit with a motor protection relay with IEC trip class 10.

The permanent installation must be fitted with an earth-leakage circuit breaker.

Make sure there is at least 3 m free cable above the maximum liquid level.

Do not install Grundfos control units, pump controllers, Ex barriers, and the free end of the power cable in potentially explosive environments.

The classification of the installation site must be approved according to local rules.

On explosion-proof pumps, make sure that an external earth conductor is connected to the external earth terminal on the pump using a conductor with a secure cable clamp. Clean the surface of the external earth connection and fit the cable clamp.

The cross-section of the earth conductor must be at least 4 mm^2, such as type H07 V2-K (PVT 90°) yellow and green.

Make sure that the earth connection is protected against corrosion.

Make sure that all protective equipment is connected correctly.

Float switches used in potentially explosive environments must be approved for this application. They must be connected to the pump controller by an intrinsically safe barrier to ensure a safe circuit.

DANGER
Electric shock
Death or serious personal injury

- If the power cable is damaged, it must be replaced by the manufacturer, his service agent, or a similarly qualified person.

Set the motor-protective circuit breaker to the rated current of the pump. The rated current is stated on the nameplate.

Make sure that the pump is connected according to these installation and operating instructions.

The supply voltage and frequency are marked on the nameplate. For voltage tolerance, see section Technical data. Make sure that the motor is suitable for the power supply available at the installation site.

All pumps are supplied with 10 m cable and a free cable end.

DANGER
Electric shock
Death or serious personal injury

- Before the first startup of the pump, check the cable for visible defects to avoid short circuits.

A possible replacement of the power cable must be carried out by Grundfos or an authorised service workshop.

The pump must be connected to one of the following controller types:

- a control unit with a motor-protective circuit breaker, such as Grundfos CU 100
- Grundfos LC 231 or 241 pump controller.

See the wiring diagrams and the installation and operating instructions for the selected control unit or pump controller.

In potentially explosive environments, proceed as follows:

- Float switches made for an Ex environment and a safety barrier in combination with either LC 231 or 241.
- Air bells in combination with LC 231 or 241.

In case of single-phase pumps, an LC 241 or LC 242 level controller must be used to comply with household standards.

For further information about the function of the thermal switches, see section Thermal switches.

Related information

5.1 Wiring diagrams

5.2.2 Thermal switches

10. Technical data

5.1 Wiring diagrams

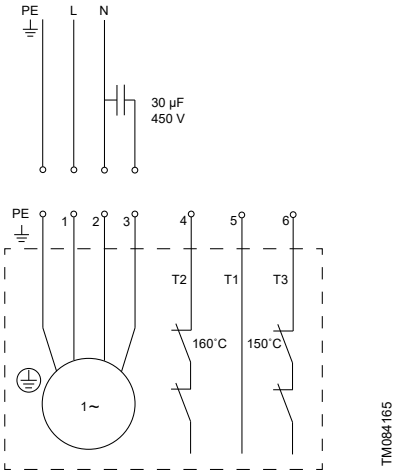

Wiring diagram for single-phase pumps

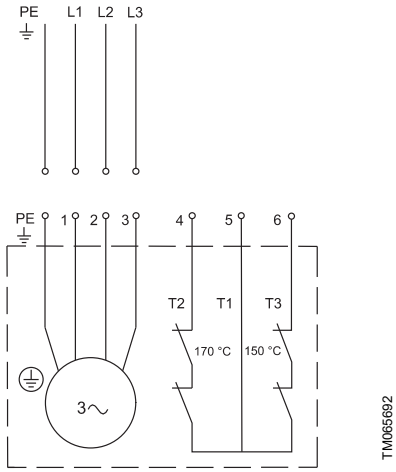

Wiring diagram for three-phase pumps

5.2 Protection and control functions

The liquid level can be controlled by the Grundfos LC 231 and LC 241 level controllers. The pumps are protected by thermal switches connected to the LC controller or a CU 100 control unit.

5.2.1 Level controllers

Suitable level controllers:

- LC 231: compact solution with certified motor protection for single- and dual-pump versions.
- LC 241: cabinet solution offering modularity and customisation for single- and dual-pump versions.
- Dedicated Controls (DC): high-end cabinet solution for multi-pump versions up to 6 pumps.

In the following description, "level switches" can be air bells, float switches, or electrodes depending on the selected pump controller.

Depending on the security and the number of pumps, level switches can be used in the following setups:

- Dry run (optional)
- Stop
- Start pump 1 (single-pump version)
- Start pump 2 (dual-pump version)
- High level (optional)

An analogue level transmitter can be used and all levels can be customised. Level switches can be used with level transmitters (one for dry and one for high level).

When installing the level switches, observe the following points:

- To prevent air intake and vibrations, install the stop level switch so the pump is stopped before the liquid level is lowered to the middle of the motor housing.
- Install the start level switch so the pump is started at the required level. The pump must always be started before the liquid level reaches the bottom of the inlet pipe.
- Always install the high-level alarm switch about 10 cm above the start level switch. However, the alarm must always be given before the liquid level reaches the inlet pipe.

For further settings, see the installation and operating instructions for the selected pump controller.

The pump must not run dry.

Install an additional level switch to ensure that the pump is stopped in case the stop level switch is not operating.

The pump must be stopped when the liquid level reaches the upper edge of the clamp.

Float switches used in potentially explosive environments must be approved for this application. They must be connected to the Grundfos LC 231 or LC 241 level controller by an intrinsically safe barrier to ensure a safe circuit. In potentially explosive environments, the anti-seizing function must be disabled on pump controllers.

5.2.2 Thermal switches

All pumps have two sets of thermal switches incorporated in the stator windings.

The thermal switch in circuit 1 (T1-T3) breaks the circuit at a winding temperature of approximately 150 °C. This thermal switch must always be connected.

The thermal switch in circuit 2 (T1-T2) breaks the circuit at the following approximate winding temperatures:

- 170 °C for three-phase pumps
- 160 °C for single-phase pumps.

After thermal cutout, explosion-proof pumps must be restarted manually. The thermal switch in circuit 2 must be connected for manual restarting of these pumps.

The maximum operating current and voltage of the thermal switches are 0.5 A at 500 VAC and cos φ 0.6. The thermal switches must be able to break a coil in the supply circuit.

When the thermal switches in standard pumps close the circuit after cooling, the controller automatically restarts the pump.

DANGER
Explosive environment
Death or serious personal injury

- Do not install the separate motor-protective circuit breaker or control unit in potentially explosive environments.

5.2.3 Moisture switch

Moisture switch is available as an option. In case of a moisture switch version, the sensor is connected to circuit 2 (T1-T2) in serial.

It opens if moisture is detected and breaks an electric circuit. The pump must be switched off and checked.

The maximum current and voltage on the moisture switches are limited to 0.5 A and 250 V.

5.2.4 CU 100 control unit

CU 100 incorporates a motor-protective circuit breaker and is available with a level switch and cable.

Single-phase pumps

Connect a run capacitor to the control unit. For capacitor size, see the table below:

Pump type	Run capacitor	
	[µF]	[V]
SL1 and SLV	30	450
DP and EF	30	450

5.3 Frequency converter operation

In principle, all three-phase motors can be connected to a frequency converter.

However, frequency converter operation often exposes the motor insulation system to a heavier load and causes the motor to be noisier due to eddy currents caused by voltage peaks.

In addition, large motors driven with a frequency converter are loaded by bearing currents.

For frequency converter operation, observe the following:

- The thermal protection of the motor must be connected.
- Peak voltage and dU/dt must be in accordance with the table below. The values stated are maximum values supplied to the motor terminals. The cable influence is not taken into account. See the frequency converter data sheet regarding the actual values and the cable influence on the peak voltage and dU/dt.
- The switching frequency is 2 kHz. Variable switching frequency is accepted.
- If the pump is an Ex-approved pump, check if the Ex certificate of the specific pump allows the use of a frequency converter.

- Set the frequency converter U/f ratio according to the motor data.
- Local regulations or standards must be complied with.

Before installing a frequency converter, calculate the lowest permissible frequency in the installation to avoid zero flow.

- Do not reduce the motor speed to less than 50 %.
- Keep the flow rate above 1 m/sec.
- Let the pump run at rated speed at least once a day to prevent sedimentation in the piping system.
- Do not exceed the frequency indicated on the nameplate as this may cause motor overload.
- Keep the power cable as short as possible. The peak voltage increases with the length of the power cable.
- Use input and output filters on the frequency converter.
- Use a screened power cable if there is a risk that electrical noise may disturb other electrical equipment.
- Set frequency converter for constant-torque operation. Pulse width modulation should be used.

When operating the pump by a frequency converter, consider the following:

- The locked-rotor torque can be lower depending on the type of the frequency converter.
- The noise level may increase. See the installation and operating instructions for the selected frequency converter.

Maximum repetitive peak voltage [V]	Maximum dU/dt U_N 400 V [V/µ sec.]
650	2000

6. Startup

CAUTION
Crushing of hands
Minor or moderate personal injury

- Do not put your hands or any tool into the pump inlet or outlet port after the pump is connected to the power supply unless the pump is switched off by removing the fuses or switching off the main switch.
- Make sure that the power supply cannot be switched on unintentionally.

Before starting the product:

- Make sure that the fuses are removed.
- Make sure that all protective equipment is connected correctly.

CAUTION
Biological hazard
Minor or moderate personal injury

- Make sure to seal the pump outlet properly when fitting the outlet pipe, otherwise water may spray out of the sealing.

WARNING
Crushing of hands
Death or serious personal injury

- When lifting the pump, make sure your hand cannot be caught between the lifting bracket and the hook.

DANGER
Crushing hazard
Death or serious personal injury

- Make sure that the hook is fixed properly to the lifting bracket.
- Always lift the pump by its lifting bracket or by a forklift truck if the pump is fixed on a pallet.
- Never lift the pump by the power cable, hose, or pipe.
- Make sure that the lifting bracket is tightened before lifting the pump. Tighten if necessary.

DANGER
Electric shock
Death or serious personal injury

- Before starting up the product for the first time, check the power cable for visible defects to avoid short circuits.
- If the power cable is damaged, it must be replaced by the manufacturer, his service agent, or a similarly qualified person.
- Make sure that the product is earthed properly.
- Switch off the power supply and lock the main switch in position 0.
- Switch off any external voltage connected to the product before working on it.

CAUTION
Biological hazard
Minor or moderate personal injury

- Flush the pump thoroughly with clean water and rinse the pump parts after dismantling. Pits for submersible sewage and wastewater pumps may contain toxic and/or contagious substances.
- Wear appropriate personal protective equipment and clothing.
- Observe the local hygiene regulations in force.

CAUTION
Hot surface
Minor or moderate personal injury

- Do not touch the surface of the pump while the pump is running.

Do not open the clamp while the pump is running.

6.1 Operating modes

The pumps are designed for intermittent operation (S3). When completely submerged in the pumped liquid, the pumps can also operate continuously (S1).

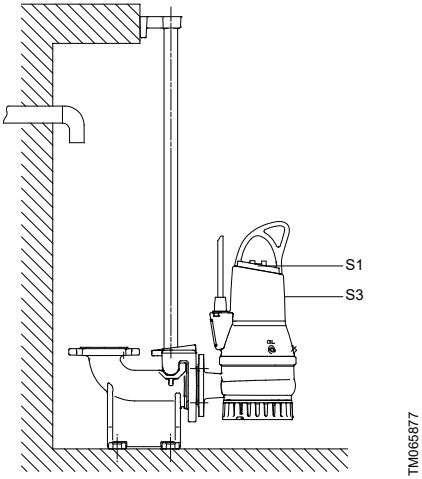

Operating levels

S3, intermittent operation

S3 operation is a series of 10-minute duty cycles (TC). Each cycle has a 4-minute period of constant load followed by a 6-minute period of rest. Thermal equilibrium is not reached during the cycle.

In this operating mode, the pump is partly submerged in the surrounding liquid. The minimum liquid level is at the top of the cable entry.

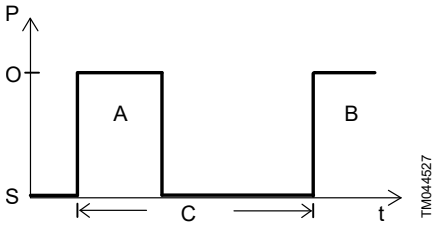

S3 operation

Pos.	Description
O	Operation
S	Stop
C	Duty cycle
t	Time

S1, continuous operation

In this operating mode, the pump can operate continuously without being stopped for cooling. Being completely submerged, the pump is sufficiently cooled by the surrounding liquid.

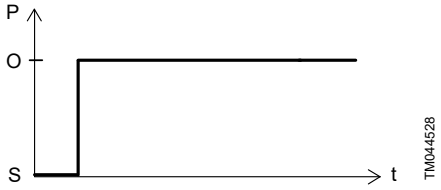

S1 operation

Pos.	Description
O	Operation
S	Stop

6.2 Start and stop levels

The difference between the start and stop levels can be adjusted by changing the free cable length.

Long free cable = large difference in level.

Short free cable = small difference in level.

Observe the following points:

- To prevent air intake and vibrations, install the stop level switch so the pump is stopped before the liquid level is lowered below the upper edge of the clamp on the pump.
- Install the start level switch so the pump is started at the required level; however, the pump must always be started before the liquid level reaches the bottom inlet pipe to the pit.

CU 100 must not be used for Ex applications.

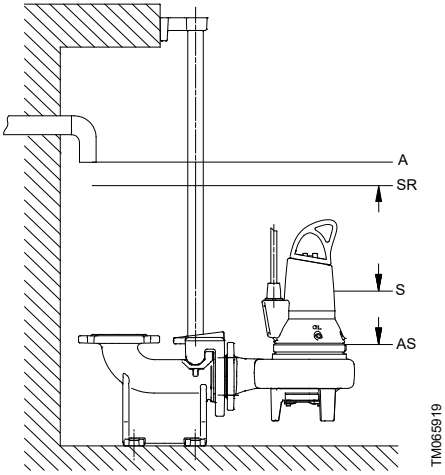

Start and stop levels

Pos.	Description
A	Alarm
SR	Start
S	Stop
AS	Additional stop

6.3 Direction of rotation

The pump may be started for a very short period without being submerged to check the direction of rotation.

The direction check must be performed outside of the hazardous area.

All single-phase pumps are factory-wired for the correct direction of rotation.

Before starting up three-phase pumps, check the direction of rotation.

An arrow on the stator housing indicates the correct direction.

The impeller rotates clockwise. When started, the pump jerks counterclockwise.

If the direction of rotation is wrong, interchange two of the phases in the power cable.

Checking the direction of rotation

Check the direction of rotation in one of the following ways every time the pump is connected to a new installation.

Procedure 1:

1. Start the pump and measure the liquid quantity or the outlet pressure.
2. Stop the pump and interchange any two of the phases in the power cable.
3. Restart the pump and measure the liquid quantity or the outlet pressure.
4. Stop the pump.
5. Compare the results taken under points 1 and 3. The connection which gives the larger liquid quantity or the higher pressure is the correct direction of rotation.

Procedure 2:

1. Let the pump hang from a lifting device, such as the hoist used for lowering the pump into the pit.
2. Start and stop the pump while observing the movement (jerk) of the pump.
3. If connected correctly, the pump jerks counterclockwise. See the figure below.
4. If the direction of rotation is wrong, interchange two of the phases in the power cable.

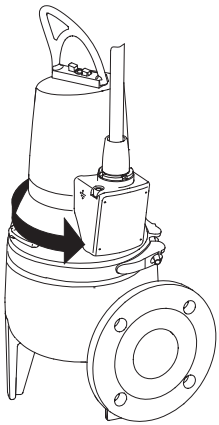

TM066065

Jerk direction

Related information

5.1 Wiring diagrams

6.4 Starting up the product

The pump must not run dry.

If the atmosphere in the pit is potentially explosive, use only pumps with Ex approval.

In case of abnormal noise or vibrations, stop the pump immediately.

Do not restart the pump until the cause of the fault is identified and eliminated.

Proceed as follows:

1. Remove the fuses and check that the impeller can rotate freely. Turn the impeller by hand.
2. Check the condition of the oil in the oil chamber.
3. Check that the monitoring units, if used, are operating satisfactorily and appropriately.
4. Check the setting of the air bells, float switches, or electrodes.
5. Open the isolating valves, if fitted.

   Auto coupling: It is important to grease the gasket of the guide claw before lowering the pump into the pit.
6. Lower the pump into the liquid and insert the fuses.

   Auto coupling: Check that the pump is in the right position on the auto-coupling base unit.
7. Check if the system is filled with liquid and vented. The pump is self-venting.
8. Switch on the power supply to the pump. When the power is on, the pump starts and pumps down to the dry-running level. This process can be used to check that the pump functions correctly.

After one week of operation or after the replacement of the shaft seal, check the condition of the oil in the chamber.

Related information

7.3 Oil check and change

6.5 Resetting the pump

To reset the pump, switch off the power supply for a minute, and switch it on again.

7. Maintenance and service

Compliance with the standards EN 60079-17 and EN 60079-19 is a customer responsibility.

DANGER
Electric shock
Death or serious personal injury

- Before starting work on the pump, make sure that the fuses have been removed or the main switch has been switched off.
- Make sure that the power supply cannot be switched on unintentionally.

CAUTION
Crushing of hands
Death or serious personal injury

- Do not put your hands or any tool into the pump inlet or outlet port after the pump is connected to the power supply unless the pump is switched off by removing the fuses or switching off the main switch.
- Make sure that all rotating parts have stopped moving.

CAUTION
Biological hazard
Minor or moderate personal injury

- Make sure to seal the pump outlet properly when fitting the outlet pipe, otherwise water may spray out of the sealing.

CAUTION
Hot surface
Minor or moderate personal injury

- Do not touch the surface of the pump while the pump is running.

WARNING
Crushing of hands
Death or serious personal injury

- When lifting the pump, make sure your hand cannot be caught between the lifting bracket and the hook.

CAUTION
Sharp element
Minor or moderate personal injury

- Do not touch the sharp edges of the impeller without wearing protective gloves.
-

DANGER
Crushing hazard
Death or serious personal injury

- Make sure that the hook is fixed properly to the lifting bracket.
- Always lift the pump by its lifting bracket or by a forklift truck if the pump is fixed on a pallet.
- Never lift the pump by the power cable, hose, or pipe.
- Make sure that the lifting bracket is tightened before lifting the pump. Tighten if necessary.

DANGER
Electric shock
Death or serious personal injury

- Before installing the pump and starting it up for the first time, check the power cable for visible defects to avoid short circuits.
- If the power cable is damaged, it must be replaced by the manufacturer, his service agent, or a similarly qualified person.
- Make sure that the product is earthed properly.
- Switch off the power supply and lock the main switch in position 0.
- Switch off any external voltage connected to the product before working on it.

CAUTION
Biological hazard
Minor or moderate personal injury

- Flush the pump thoroughly with clean water and rinse the pump parts after dismantling. Pits for submersible sewage and wastewater pumps may contain sewage or wastewater with toxic and/or contagious substances.
- Wear appropriate personal protective equipment and clothing.
- Observe the local hygiene regulations in force.

CAUTION
Pressurised system
Minor or moderate personal injury

- The oil chamber may be under pressure. Do not remove the screws until the pressure is completely relieved.

Except for service on the pump parts, all other service work must be carried out by Grundfos or an authorised workshop and approved for servicing explosion-proof products.

Before carrying out maintenance and service, flush the pump thoroughly with clean water. Rinse the pump parts after dismantling.

If the pump is inactive for long periods, check its function.

Service videos can be found in Grundfos Product Center at www.grundfos.com.

If the pump is inactive for a longer period (more than 1-3 months), ensure the free rotation of the shaft by rotating it by hand. In case of any seizing, refer to the section Maintenance schedule.

A possible replacement of the power cable must be carried out by Grundfos or an authorised service workshop.

Related information

7.2 Maintenance schedule

7.1 Contaminated pumps

CAUTION
Biological hazard
Minor or moderate personal injury
- Flush the pump thoroughly with clean water and rinse the pump parts after dismantling.

The product is classified as contaminated if it is used for contagious or toxic liquid.

Contact Grundfos with details about the pumped liquid before returning the product for service. Otherwise, Grundfos can refuse to accept the product.

Any application for service must include details about the pumped liquid.

Clean the product in the best possible way before returning it.

Costs of returning the product are to be paid by the customer.

7.2 Maintenance schedule

Inspect pumps running normal operation every 3000 operating hours or at least once a year. If the dry solids content of the pumped liquid is very high or sandy, check the pump at shorter intervals.

Check the following points:

- **Power consumption**

  See the nameplate.
- **Oil level and condition**

  When the pump is new or after the replacement of the shaft seal, check the oil level after one week of operation. Use Shell Ondina X420 oil or a similar type. Oil autoignition temperature must be above 180 °C.
- **Cable entry**

  Make sure that the cable entry is watertight and that the cables are not sharply bent or pinched.
- **Pump parts**

  Check the wear parts and replace the defective ones.
- **Ball bearings**

  Check the shaft for noisy or heavy operation by turning the shaft by hand. Replace defective ball bearings. A general overhaul of the pump is usually required in case of defective ball bearings or poor motor function. This work must be carried out by Grundfos or an authorised service workshop.

  The ball bearings are lubricated for a lifetime.

Related information

2.4.1 Nameplate

7.3 Oil check and change

7.7 Service kits

7.3 Oil check and change

Change the oil in the oil chamber every 3000 operating hours or at least once a year or if the shaft seal is replaced.

In case of the drained oil contains water, check and replace the shaft seal.

The table below indicates the oil quantity in the oil chamber:

Pump type	Quantity of oil in the oil chamber [l]
SL1, SLV, DP, and EF pumps up to 1.5 kW	0.17
DP pumps of 2.6 kW	0.42

Draining of oil

CAUTION
Pressurised system
Minor or moderate personal injury
- The oil chamber may be under pressure. Loosen the screws carefully and do not remove them until the pressure is completely relieved.

1. Loosen and remove both oil screws to allow all the oil to drain from the chamber.
2. Check the oil for water and impurities. If the shaft seal is removed, the oil indicates the condition of the shaft seal.

Dispose of used oil in accordance with local regulations.

Oil filling, pump in a horizontal position

1. Place the pump horizontally on the stator housing and make sure the outlet flange and the oil screws are pointing upwards.
2. Fill oil into the oil chamber through the upper hole until it starts running out of the lower hole. The oil level is now correct.
3. Fit both oil screws using the gaskets included in the O-ring service kit.

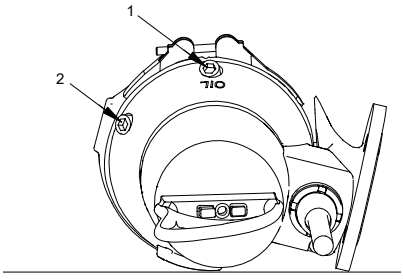

Oil filling holes

Pos.	Description
1	Oil filling
2	Oil level

Oil filling, pump in a vertical position

1. Place the pump on a plain, horizontal surface.
2. Fill oil into the oil chamber through one of the holes until it starts running out of the other hole.
3. Fit both oil screws using the gaskets included in the O-ring service kit.

Related information

7.6 Checking or replacing the shaft seal
7.7 Service kits

7.4 Adjusting the impeller clearance

The SLV pumps (SuperVortex) with semi-open impellers do not need impeller adjustment.

SL1 pumps

For position numbers in brackets, see the Appendix.

Proceed as follows:

1. Loosen the locking screws (188b).
2. Loosen the adjusting screws (89) and push the wear plate (162) until it touches the impeller.
3. Tighten the adjusting screws so that the wear plate still touches the impeller. Then loosen all the adjusting screws for about half a turn.

Make sure the impeller can rotate freely without touching the wear plate.

4. Tighten the locking screws.
5. Rotate the impeller by hand to check that it is not touching the wear plate.

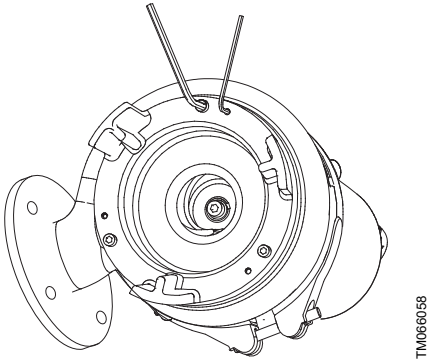

Pump viewed from the inlet side

Related information

A.1. Appendix
7.5 Cleaning the pump housing

7.5 Cleaning the pump housing

For position numbers in brackets, see the Appendix.

Proceed as follows:

Dismantling

1. Place the pump in a vertical position.

2. Loosen and remove the clamp (92) fastening the pump housing to the motor.
3. Lift the motor out of the pump housing (50). As the impeller is fastened to the shaft end, the impeller is removed together with the motor.
4. Clean the pump housing and the impeller.

Assembly

1. Place the motor with the impeller in the pump housing (50).
2. Fit and tighten the clamp.

Related information

A.1. Appendix

7.6 Checking or replacing the shaft seal

7.6 Checking or replacing the shaft seal

Check the oil to make sure that the shaft seal is intact.

If the oil contains more than 20 % water, the shaft seal is defective and must be replaced. If the shaft seal is not replaced, the motor may be damaged.

If the oil is clean, it can be reused.

For position numbers in brackets, see the Appendix.

Proceed as follows:

1. Loosen and remove the clamp (92) fastening the pump housing to the motor.
2. Lift the motor out of the pump housing (50). As the impeller is fastened to the shaft end, the impeller is removed together with the motor.
3. Remove the screw (188a) from the shaft end.
4. Remove the impeller (49) from the shaft.
5. Drain the oil from the oil chamber. The shaft seal is a complete unit for all pumps.
6. Remove the screws (188a) securing the shaft seal (105).
7. Lift the shaft seal (105) out of the oil chamber using the lever principle using the two dismounting holes in the shaft seal carrier (58) and two screwdrivers.
8. Check the condition of the bush (103) where the secondary seal of the shaft seal touches the bush. The bush must be intact. If the bush is worn and must be replaced, the pump must be checked by Grundfos or an authorised service workshop. If the bush is intact, continue as follows:
9. Check and clean the oil chamber.
10. Lubricate the faces in contact with the shaft seal with oil.
11. Insert the new shaft seal (105) using the plastic bush included in the kit.
12. Tighten the screws (188a) securing the shaft seal to 16 Nm.
13. Fit the impeller. Make sure that the key (9a) is fitted correctly.
14. Fit and tighten the screw (188a) securing the impeller to 22 Nm.
15. Place the motor with the impeller in the pump housing (50).
16. Fit and tighten the clamp (92).
17. Fill the oil chamber with oil.

For adjustment of the impeller clearance, see section Adjusting the impeller clearance.

Related information

A.1. Appendix

7.3 Oil check and change

7.4 Adjusting the impeller clearance

7.7 Service kits

7.7 Service kits

The following service kits are available for all pumps.

Service kit	Contents	Pump type	Material	Product number
Shaft seal kit	Shaft seal complete	All	BQQP	96106536
		All	BQQV	96645161
O-ring kit	O-rings and gaskets for oil screws	SL1 and SLV	NBR	96115107
		SL1 and SLV	FKM	96646049
		DP and EF 0.6 - 1.5 kW	NBR	96115107
			FKM	96646049
		DP and EF 2.6 kW	NBR	96115108
			FKM	96646060
Impeller	Impeller complete with adjusting screw, shaft screw, and key	SL1.50.65.09		96115096
		SL1.50.65.11		96115097
		SL1.50.65.15		96115098
		SLV.65.65.09		96115110
		SLV.65.65.11		96115099
		SLV.65.65.15		96115100
		EF30.50.06		96115101
		EF30.50.09		96115109
		EF30.50.11		96115102
		EF30.50.15		96115103
		DP10.50.09		96115104
		DP10.50.15		96115105
		DP10.65.26		96115106
Oil	1 litre of oil, type Shell Ondina X420. For the required oil quantity in the oil chamber, see the section Oil check and change.	All types		96586753
Lifting bracket	Lifting bracket and screw	0.9 - 1.5 kW		96984147
		2.6 kW		96984148

Related information

7.3 Oil check and change

8. Storage

During long periods of storage, protect the pump against moisture and heat.

After a long period of storage (1-3 months), rotate the shaft at least once a month to avoid seizing internal parts.

After a long period of storage, inspect the pump before putting it into operation. Make sure that the impeller can rotate freely. Pay attention to the condition of the shaft seal and the cable entry.

Storage temperature: -30 to +60 °C.

A product that is not indicated to be protected against freezing shall not be left outside in freezing weather conditions.

9. Fault finding the product

Before diagnosing any fault, read and observe the safety instructions.

Observe all regulations applying to pumps installed in potentially explosive environments.
Make sure that no work is carried out in a potentially explosive atmosphere.

Before diagnosing any fault, make sure the following:

- The fuses are removed or the main switch is switched off.
- The power supply cannot be switched on unintentionally.
- All rotating parts have stopped moving.

Related information

6.3 Direction of rotation
7. Maintenance and service
7.4 Adjusting the impeller clearance

9.1 The pump does not start. The fuses blow or the motor-protective circuit breaker trips out immediately. Caution: Do not start again!

Cause	Remedy
Power supply failure, short circuit, or earth leakage in the power cable or the motor windings.	• Have the power cable and motor checked and repaired by a qualified electrician.
The fuses blow due to the use of incorrect fuses.	• Install the correct fuses.
The impeller is blocked by impurities.	• Clean the impeller.
The air bells, the float switches, or the electrodes are out of adjustment or defective.	• Readjust or replace the air bells, float switches, or electrodes.

9.2 The pump starts, but the motor-protective circuit breaker trips after a short time.

Cause	Remedy
Low setting of the thermal relay in the motor-protective circuit breaker.	• Set the relay in accordance with the specifications on the nameplate.
Increased current consumption due to large voltage drop.	• Measure the voltage between two motor phases. • Tolerance: -10 % ± 6 %. • Re-establish the correct voltage supply.
The impeller is blocked by impurities. Increased current consumption in all three phases.	• Clean the impeller.
The impeller clearance is incorrect.	• Readjust the impeller.

9.3 The thermal switch trips after the pump is running for some time.

Cause	Remedy
The liquid temperature is too high.	• Reduce the liquid temperature.
The liquid viscosity is too high.	• Dilute the liquid.

Cause	Remedy
Wrong electrical connection. (If the pump is star-connected to a delta connection, it results in very low undervoltage).	• Check and correct the electrical installation.

9.4 The pump operates at below-standard performance and power consumption.

Cause	Remedy
The impeller is blocked by impurities.	• Clean the impeller.
The direction of rotation is wrong.	• Check the direction of rotation. If it is incorrect, interchange two phases in the power cable.

9.5 The pump operates but delivers no liquid.

Cause	Remedy
The outlet valve is closed or blocked.	• Check the outlet valve and open or clean it, if necessary.
The non-return valve is blocked.	• Clean the non-return valve.
There is air in the pump.	• Vent the pump.

10. Technical data

Operating conditions

The pumps are designed for intermittent operation (S3). When completely submerged in the pumped liquid, the pumps can also operate continuously (S1).

Operating pressure	Maximum 6 bar
Number of starts per hour	Maximum 30
pH value	Pumps in permanent installations can be used for pumping liquids with a pH value between 4 and 10.

Installation depth

Maximum 20 m below liquid level.

Ensure a minimum power cable length of the installation depth plus 3 meters.

10.1 Operating mode

Maximum solids size	
Type	Maximum solids size [mm]
SL1.50.65	50
SLV.65.65	65
EF	30

Liquid temperature

0-40 °C.

For short periods of a maximum of 15 minutes, a temperature of up to 60 °C is allowed. This applies to standard versions only.

Explosion-proof pumps must never pump liquids at a temperature higher than 40 °C.

Ambient temperature

The allowed ambient temperature is -20 to +40 °C

For explosion-proof pumps with WIO sensor, the ambient temperature at the installation site must be within 0-40 °C.

Density of the pumped liquid

When pumping liquids with a density and/or a kinematic viscosity higher than water, use motors with correspondingly higher outputs.

Sound pressure level

The sound pressure level of the pumps is lower than the limiting values stated in the EC Council directive 2006/42/EC relating to machinery.

10.2 Electrical data

Power supply	• 1 x 230 V - 10 ± 6 %, 50 Hz • 3 x 230 V - 10 ± 6 %, 50 Hz • 3 x 400 V - 10 ± 6 %, 50 Hz.
Enclosure class	IP68, according to IEC 60529
Insulation class	F (155 °C)

10.2.1 Winding resistances

Motor size	**Winding resistance**	
	Single-phase motor	
[kW]	Starting winding	Main winding
0.9	4.5 Ω	2.75 Ω
1.1		
	Three-phase motor	
[kW]	3 x 230 V	3 x 400 V
0.9	6.8 Ω	9.1 Ω
1.1		
1.5		

The table values do not include the cable. Resistance in the cables: 2 x 10 m, approximately 0.28 Ω.

10.2.2 Pump performance curves

Pump performance curves are available at www.grundfos.com.

The curves are to be considered as a guide. They must not be used as guarantee curves.

Test curves for the supplied pump are available on request.

10.2.3 Dimensions and Weights

Weights do not include accessories.

Power [kW]	**Weight [kg]**
SL1 - 0.9, 1.1 and 1.5	53
SLV - 0.9, 1.1 and 1.5	47
DP 0.9 and 1.5	42
DP 2.6	70
EF 0.6, 1.1 and 1.5	40

For dimensions, see the Appendix.

Related information

A.1. Appendix

11. Disposing of the product

This product or parts of it must be disposed of in an environmentally sound way.

1. Use the public or private waste collection service.
2. If this is not possible, contact the nearest Grundfos company or service workshop.

	The crossed-out wheelie bin symbol on a product means that it must be disposed of separately from household waste. When a product marked with this symbol reaches its end of life, take it to a collection point designated by the local waste disposal authorities. The separate collection and recycling of such products will help protect the environment and human health.

See also end-of-life information at *www.grundfos.com/product-recycling*.

12. Document quality feedback

To provide feedback about this document, scan the QR code using your phone's camera or a QR code app.

FEEDBACK96526170

Click here to submit your feedback

A.1. Appendix

One-pump installation on auto coupling

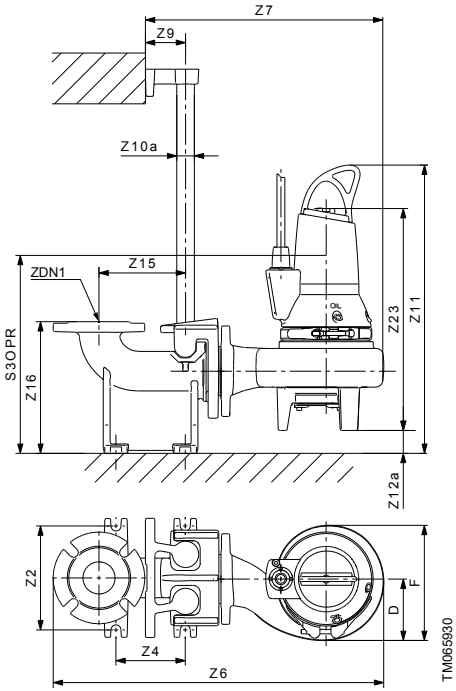

SL1.50

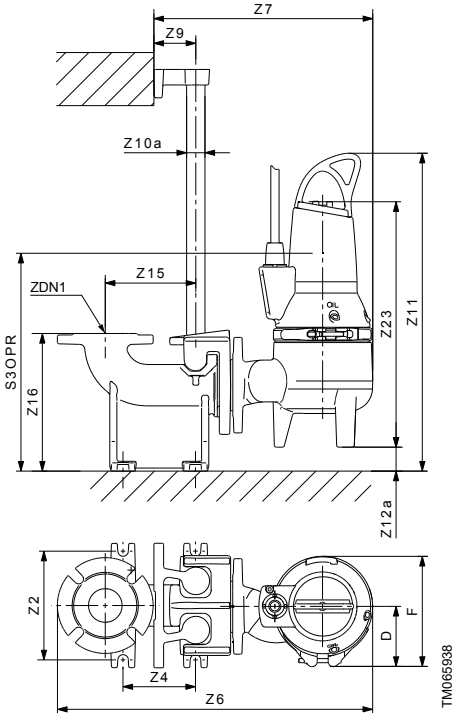

SLV.65

Pump type	D	F	Z2	Z4	Z6	Z7	Z9	Z10a	Z11	Z12a	Z15	Z16	Z23	ZDN1	S3OPR
SL1	126	236	210	140	661	485	81	1 1/2"	599	45	175	266	411	DN65	377
SLV	119	216	210	140	598	423	81	1 1/2"	610	46	175	266	461	DN65	398

One-pump installation on auto coupling

DP 0.9 - 1.5 kW

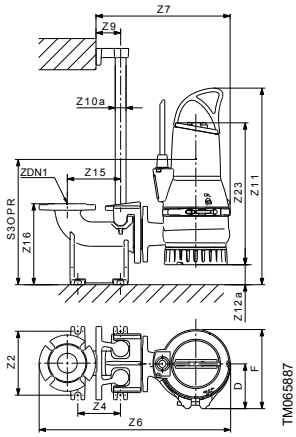

DP 2.6 kW

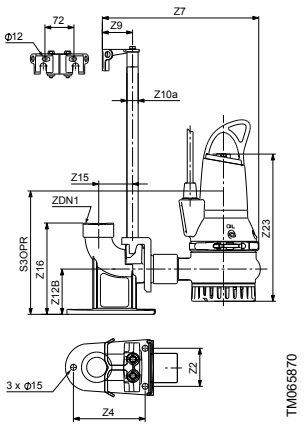

EF 0.6 - 1.5 kW

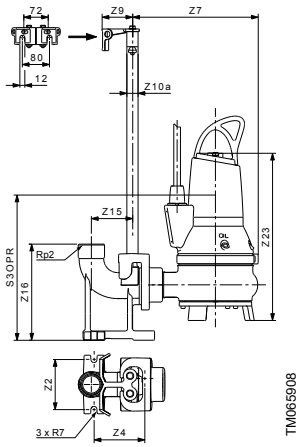

Power [kW]	D	F	Z2	Z4	Z6	Z7	Z9	Z10a	Z11	Z12a	Z12B	Z15	Z16	Z23	ZDN1	S3OPR
DP 0.9 - 1.5	-	-	115	118	-	370	70	1"	-	-	166	90	226	388	Rp 2	324
DP 2.6	137	252	210	140	623	436	81	1 1/2"	651	64	-	175	266	462	DN 65	391
EF 0.6 - 1.5	-	-	115	118	-	370	70	1"	-	-	-	90	226	385	Rp 2	323

One-pump installation on hookup auto coupling

DP	EF
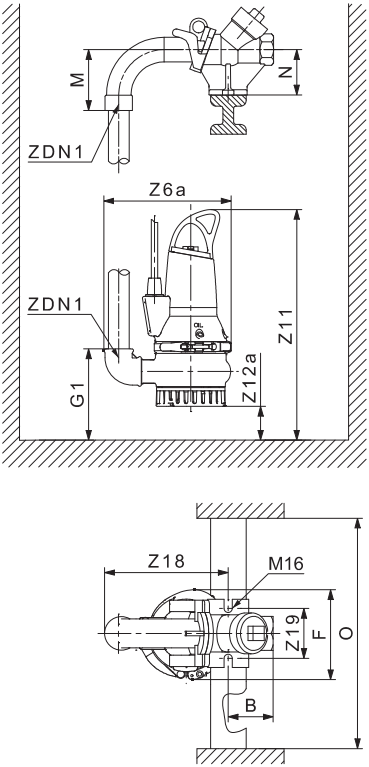	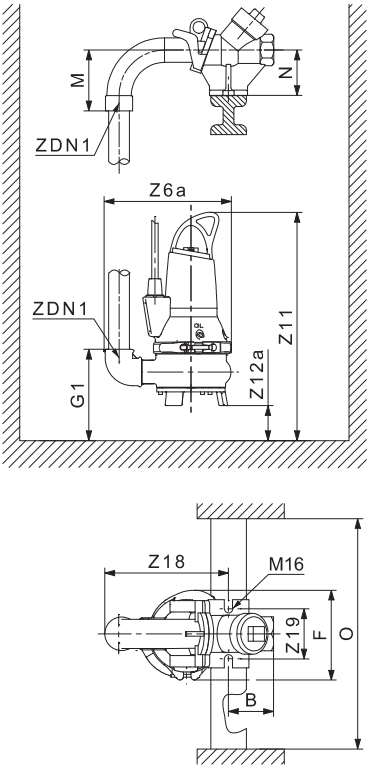

Power [kW]	B	F	G1	Z	M	N	O	Z11	Z1	Z18	Z19	ZDN1
DP 0.9 - 1.5	75	218	160	325	140	100	600	523	30	286	110	Rp 2
EF 0.6 - 1.5	75	218	163	325	140	100	600	530	30	286	110	DN 65

Free-standing installation

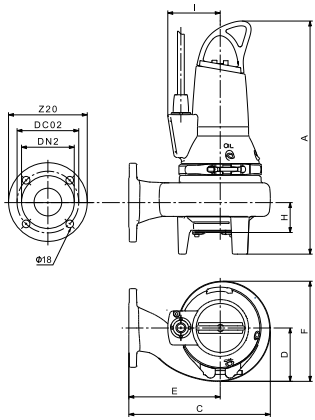

TM065929

SL1.50

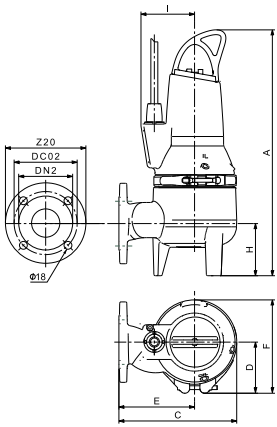

TM066076

SLV.65

Pump type	A	C	D	E	F	H	I	DC02	Z20	DN2
SL1	544	333	126	215	242	69	123	145	185	DN65
SLV	565	271	97	174	213	120	123	145	185	DN65

Free-standing installation

DP 0.6 - 1.5 kW	DP 2.6 kW	EF 0.6 - 1.5 kW

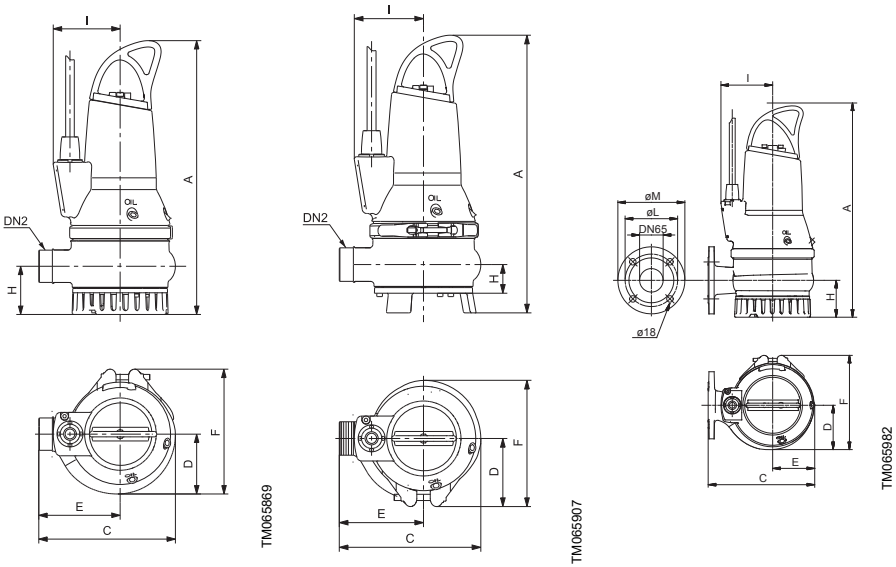

Power [kW]	A	C	D	E	F	H	DC02	Z20	DN2	I
DP 0.9 - 1.5	493	252	117	150	218	87	-	-	Rs 2	123
DP 2.6	592	294	137	180	252	102	143	185	DN65	143
EF 0.6 - 1.5	504	252	117	150	218	84	-	-	Rs 2	123

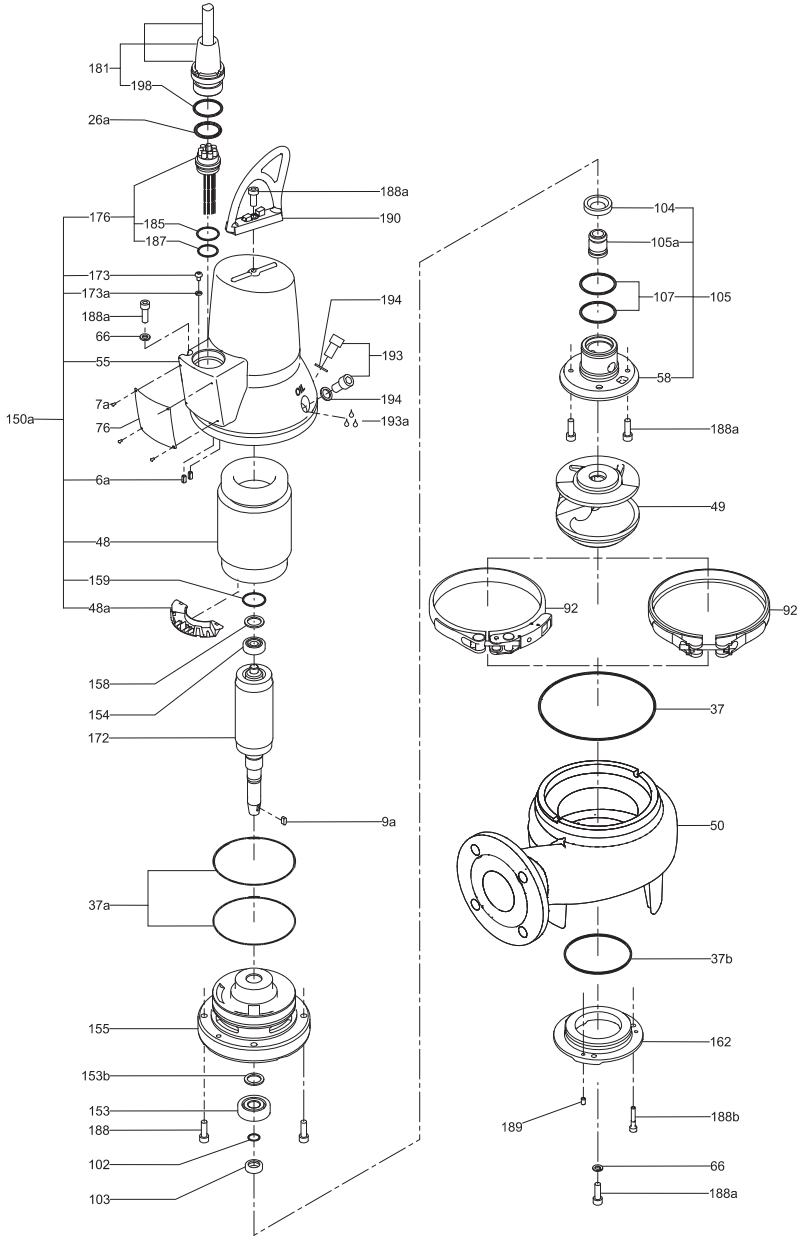

Exploded view of SL1.50 pump

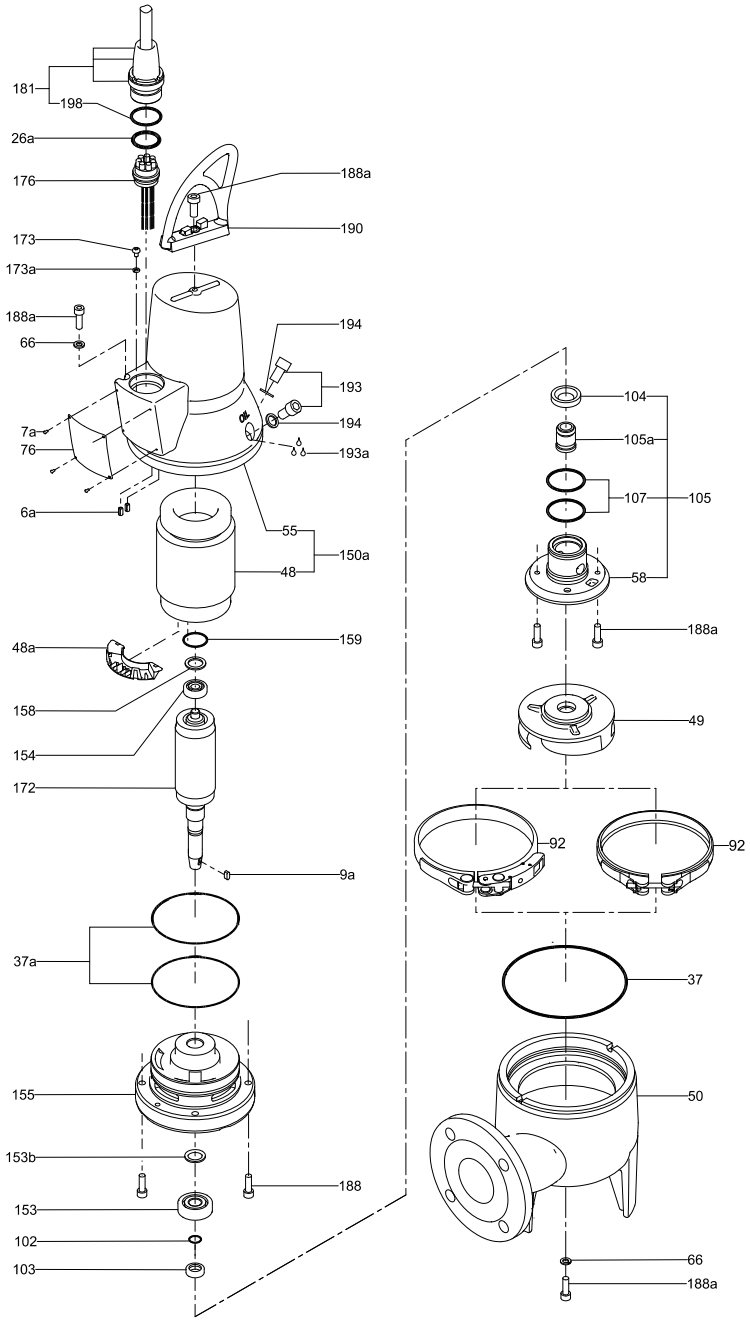

Exploded view of SLV.65 pump

Pos.	Description GB	Описание BG	Popis CZ	Beschreibung DE
6a	Pin	Щифт	Kolík	Stift
7a	Rivet	Нит	Nýt	Kerbnagel
9a	Key	Фиксатор	Pero	Keil
26a	O-ring	О-пръстен	O-kroužek	O-Ring
37	O-ring	О-пръстен	O-kroužek	O-Ring
37a	O-ring	О-пръстени	O-kroužky	O-Ring
37b	O-ring	О-пръстени	O-kroužky	O-Ring
48	Stator	Статор	Stator	Stator
48a	Terminal board	Клеморед	Svorkovnice	Klemmbrett
49	Impeller	Работно колело	Oběžné kolo	Laufrad
50	Pump housing	Помпен корпус	Těleso čerpadla	Pumpengehäuse
55	Stator housing	Корпус на статора	Těleso statoru	Statorgehäuse
58	Shaft seal carrier	Носач на уплътнението при вала	Unašeč ucpávky	Dichtungshalter
66	Locking ring	Фиксиращ пръстен	Pojistný kroužek	Sicherungsring
76	Nameplate	Табела	Typový štítek	Leistungsschild
92	Clamp	Скоба	Fixační objímka	Spannband
102	O-ring	О-пръстен	O-kroužek	O-Ring
103	Bush	Втулка	Pouzdro	Buchse
104	Seal ring	Уплътняващ пръстен	Těsnicí kroužek	Dichtungsring
105 105a	Shaft seal	Уплътнение при вала	Hřídelová ucpávka	Wellenabdichtung
107	O-ring	О-пръстени	O-kroužky	O-Ring
150a	Stator housing, complete.	Корпус на статора, пълен	Těleso statoru, kompletní	Statorgehäuse, komplett
153	Bearing	Лагер	Ložisko	Lager
153b	Locking ring	Застопоряващ пръстен	Pojistný kroužek	Sicherungsring
154	Bearing	Лагер	Ložisko	Lager
155	Oil chamber	Маслото в камерата	Olejové komoře	Ölsperrkammer
158	Corrugated spring	Гофрирана пружина	Tlačná pružina	Gewellte Feder
159	O-ring	О-пръстен	O-kroužek	O-Ring
162	Wear plate	Износваща се плоча	Těsnicí deska	Verschleißplatte
172	Rotor/shaft	Ротор/вал	Rotor/hřídel	Rotor/Welle
173	Screw	Винт	Šroub	Schraube
173a	Washer	Шайба	Podložka	Unterlegscheibe
176	Inner plug part	Вътрешна част на щепсела	Vnitřní část kabelové průchodky	Kabelanschluss, innerer Teil
181	Outer plug part	Външна част на щепсела	Vnější část kabelové průchodk	Kabelanschluss, äußerer Teil
185	O-ring	О-пръстен	O-kroužek	O-Ring
187	O-ring	О-пръстен	O-kroužek	O-Ring
188	Screw	Винт	Šroub	Schraube
188a	Screw	Винт	Šroub	Schraube

Pos.	Description GB	Описание BG	Popis CZ	Beschreibung DE
188b	Locking screw	Фиксиращ винт	Pojistný šroub	Sicherungsschraube
189	Adjusting screw	Винт за настройка	Stavěcí šroub	Justierschraube
190	Lifting bracket	Ръкохватка	Zvedací rukoje	Transportbügel
193	Oil screw	Винт при камерата за масло	Olejová zátka	Ölschraube
193a	Oil	Масло	Olej	Öl
194	Gasket	Гарнитура	Těsnicí kroužek	Dichtung
198	O-ring	О-пръстен	O-kroužek	O-Ring

Pos.	Beskrivelse DK	Seletus EE	Descripción ES	Kuvaus FI
6a	Stift	Tihvt	Pasador	Tappi
7a	Nitte	Neet	Remache	Niitti
9a	Feder	Kiil	Chaveta	Kiila
26a	O-ring	O-ring	Junta tórica	O-rengas
37	O-ring	O-ring	Junta tórica	O-rengas
37a	O-ringe	O-ring	Junta tórica	O-rengas
37b	O-ringe	O-ring	Junta tórica	O-rengas
48	Stator	Staator	Estator	Staattori
48a	Klembræt	Klemmliist	Caja de conexiones	Kytkentälevy
49	Løber	Tööratas	Impulsor	Juoksupyörä
50	Pumpehus	Pumbapesa	Cuerpo de bomba	Pumppupesä
55	Statorhus	Staatori korpus	Alojamiento de estator	Staattoripesä
58	Akseltætningsholder	Võllitihendi alusplaat	Soporte de cierre	Akselitiivistekannatin
66	Låsering	Lukustusrõngas	Anillo de cierre	Lukkorengas
76	Typeskilt	Andmeplaat	Placa de identificación	Arvokilpi
92	Spændebånd	Klamber	Abrazadera	Kiinnityspanta
102	O-ring	O-ring	Junta tórica	O-rengas
103	Bøsning	Puks	Casquillo	Holkki
104	Simmerring	Tihend	Anillo de cierre	Tiivisterengas
105 105a	Akseltætning	Võllitihend	Cierre	Akselitiiviste
107	O-ring	O-ring	Junta tórica	O-rengas
150a	Statorhus, komplet	Staatori korpus, täielik	Alojamiento de estator, completo	Staattoripesä, kokonainen
153	Leje	Laager	Cojinete	Laakeri
153b	Låsering	Lukustusrõngas	Anillo de bloqueo	Lukkorengas
154	Leje	Laager	Cojinete	Laakeri
155	Oliekammer	Õlikamber	Cámara de aceite	Öljytila
158	Bølgefjeder	Vedruseib	Muelle ondulado	Aaltojousi
159	Skive	O-ring	Arandela	Aluslevy
162	Slidplade	Pumbapesa põhi	Placa de desgaste	Kulutuslevy
172	Rotor/aksel	Rootor/võll	Rotor/eje	Roottori/akseli

Pos.	Beskrivelse DK	Seletus EE	Descripción ES	Kuvaus FI
173	Skrue	Polt	Tornillo	Ruuvi
173a	Skive	Seib	Arandela	Aluslevy
176	Indvendig stikdel	Pistiku sisemine pool	Parte de clavija interior	Sisäpuolinen tulppaosa
181	Udvendig stikdel	Pistiku välimine pool	Parte de clavija exterior	Ulkopuolinen tulppaosa
185	O-ring	O-ring	Junta tórica	O-rengas
187	O-ring	O-ring	Junta tórica	O-rengas
188	Skrue	Polt	Tornillo	Ruuvi
188a	Skrue	Polt	Tornillo	Ruuvi
188b	Låseskrue	Lukustusrõngas	Tornillo de apriete	Lukitusruuvi
189	Justerskrue	Reguleerimiskruvi	Tornillo de ajuste	Säätöruuvi
190	Løftebøjle	Tõsteaas	Asa	Nostosanka
193	Olieskrue	Õlikambri kork	Tornillo de aceite	Öljytulppa
193a	Olie	Õli	Aceite	Öljy
194	Pakning	Tihend	Junta	Tiiviste
198	O-ring	O-ring	Junta tórica	O-rengas

Pos.	Description FR	Περιγραφή GR	Opis HR	Megnevezés HU
6a	Broche	Πείρος	Nožica	Csap
7a	Rivet	Πριτσίνι	Zarezani čavao	Szegecs
9a	Clavette	Κλειδί	Opruga	Rögzítőék
26a	Joint torique	Δακτύλιος-Ο	O-prsten	O-gyűrű
37	Joint torique	Δακτύλιος-Ο	O-prsten	O-gyűrű
37a	Joint torique	Δακτύλιος-Ο	O-prsten	O-gyűrűk
37b	Joint torique	Δακτύλιος-Ο	O-prsten	O-gyűrűk
48	Stator	Στάτης	stator	Állórész
48a	Bornier	Κλέμες σύνδεσης	priključna letvica	Kapcsoló tábla
49	Roue	Πτερωτή	rotor	Járókerék
50	Corps de pompe	Περίβλημα αντλίας	kućište crpke	Szivattyúház
55	Logement de stator	Περίβλημα στάτη	kućište statora	Állórészház
58	Support de garniture mécanique	Φορέας στυπιοθλίπτη άξονα	držač brtve	Tengelytömítés-keret
66	Anneau de serrage	Ασφαλιστικός δακτύλιος	sigurnosni prsten	Rögzítőgyűrű
76	Plaque signalétique	Πινακίδα	natpisna pločica	Adattábla
92	Collier de serrage	Σφιγκτήρας	zatezna traka	Bilincs
102	Joint torique	Δακτύλιος-Ο	O-prsten	O-gyűrű
103	Douille	Αντιτριβικός δακτύλιος	brtvenica	Tömítőgyűrű
104	Anneau d'étanchéité	Στεγανοποιητικός δακτύλιος	brtveni prsten	Tömítőgyűrű
105 105a	Garniture mécanique	Στυπιοθλίπτης άξονα	brtva vratila	Tengelytömítés
107	Joint torique	Δακτύλιοι-Ο	O-prsten	O-gyűrűk
150a	Logement de stator, complet	Περίβλημα στάτη, πλήρης	kućište statora, sav	Állórészház, teljes
153	Roulement	Έδρανο	ležaj	Csapágy

Pos.	Description FR	Περιγραφή GR	Opis HR	Megnevezés HU
153b	Collier de serrage	Ασφαλιστικός δακτύλιος	Stezni prsten	Rögzítőgyűrű
154	Roulement	Έδρανο	ležaj	Csapágy
155	Chambre à huile	Θάλαμος λαδιού	komora za ulje	Olajkamra
158	Ressort ondulé	Αυλακωτό ελατήριο	valovita opruga	Hullámrugó
159	Joint torique	Ροδέλα	O-prsten	O-gyűrű
162	Plaque d'usure	Πλάκα φθοράς	žrtvena pločica	Kopóelem
172	Rotor/arbre	Ρότορας/άξονας	rotor/vratilo	Forgórész/tengely
173	Vis	Βίδα	vijak	Csavar
173a	Rondelle	Ροδέλα	podložna pločica	Alátét
176	Partie intérieure de la fiche	Εσωτερικό τμήμα φις	kabel. priključak, nutarnji dio	Belső kábelbevezetés
181	Partie extérieure de la fiche	Εξωτερικό τμήμα φις	kabel. priključak, vanjski dio	Külső kábelbevezetés
185	Joint torique	Δακτύλιος-Ο	O-prsten	O-gyűrű
187	Joint torique	Δακτύλιος-Ο	O-prsten	O-gyűrű
188	Vis	Βίδα	vijak	Csavar
188a	Vis	Βίδα	vijak	Csavar
188b	Vis de fixation	Βίδα συγκράτησης	sigurnosni vijak	Rögzítő csavar
189	Vis d'ajustement	Βίδα ρύθμισης	vijak za justiranje	Beállító csavar
190	Poignée de levage	Χειρολαβή	transportni stremen	Emelőfül
193	Bouchon d'huile	Βίδα λαδιού	vijak za ulje	Olajtöltőnyílás zárócsavarja
193a	Huile	Λάδι	ulje	Olaj
194	Joint d'étanchéité	Τσιμούχα	brtva	Tömítés
198	Joint torique	Δακτύλιος-Ο	O-prsten	O-gyűrű

Pos.	Descrizione IT	Aprašymas LT	Apraksts LV	Omschrijving NL
6a	Perno	Vielokaištis	Tapa	Paspen
7a	Rivetto	Kniedė	Kniede	Klinknagel
9a	Chiavetta	Kaištis	Atslēga	Spie
26a	O-ring	O žiedas	Apaļa šķērsgriezuma blīvgredzens	O-ring
37	O-ring	O žiedas	Apaļa šķērsgriezuma blīvgredzens	O-ring
37a	O-ring	O žiedas	Apaļa šķērsgriezuma blīvgredzens	O-ring
37b	O-ring	O žiedas	Apaļa šķērsgriezuma blīvgredzens	O-ring
48	Statore	Statorius	Stators	Stator
48a	Morsettiera	Kontaktų plokštė	Spaiļu plate	Aansluitblok
49	Girante	Darbaratis	Darbrats	Waaier
50	Corpo pompa	Siurblio korpusas	Sūkņa korpuss	Pomphuis
55	Cassa statore	Statoriaus korpusas	Statora korpuss	Motorhuis
58	Supporto tenuta meccanica	Veleno sandariklio lizdas	Vārpstas blīvējuma turētājs	Dichtingsplaat
66	Anello di arresto	Fiksavimo žiedas	Sprostgredzens	Borgring
76	Targhetta di identificazione	Vardinė plokštelė	Pases datu plāksnīte	Typeplaatje
92	Fascetta	Apkaba	Apskava	Klembeugel

Pos.	Descrizione IT	Aprašymas LT	Apraksts LV	Omschrijving NL
102	O-ring	O žiedas	Apaļa šķērsgriezuma blīvgredzens	O-ring
103	Bussola	Įvorė	Ieliktnis	Bus
104	Anello di tenuta	Sandarinimo žiedas	Blīvējošais gredzens	Olie keerring
105 105a	Tenuta meccanica	Veleno sandariklis	Vārpstas blīvējums	Asafdichting
107	O-ring	O žiedas	Apaļa šķērsgriezuma blīvgredzens	O-ring
150a	Cassa statore, completo	Statoriaus korpusas, pilnas	Statora korpuss, viss	Motorhuis, compleet
153	Cuscinetto	Guolis	Gultnis	Kogellager
153b	Anello di blocco	Fiksavimo žiedas	Sprostgredzens	Vergrendelingsring
154	Cuscinetto	Guolis	Gultnis	Kogellager
155	Camera dell'olio	Alyvos kamera	Eļļas kamera	Oliekamer
158	Molla ondulata	Rifliuota spyruoklė	Viļņotā atspere	Drukring
159	O-ring	O žiedas	Apaļa šķērsgriezuma blīvgredzens	Ring
162	Flangia	Dilimo plokštelė	Nodiluma platne	Slijtplaat
172	Gruppo rotore/albero	Rotorius/velenas	Rotors/vārpsta	Rotor/as
173	Vite	Varžtas	Skrūve	Schroef
173a	Rondella	Poveržlė	Paplāksne	Ring
176	Parte interna del connettore	Vidinė kištuko dalis	Spraudņa iekšējā daļa	Kabel connector inwendig
181	Parte esterna del connettore	Išorinė kištuko dalis	Spraudņa ārējā daļa	Kabel connector uitwendig
185	O-ring	O žiedas	Apaļa šķērsgriezuma blīvgredzens	O-ring
187	O-ring	O žiedas	Apaļa šķērsgriezuma blīvgredzens	O-ring
188	Vite	Varžtas	Skrūve	Inbusbout
188a	Vite	Varžtas	Skrūve	Inbusbout
188b	Vite di chiusura	Fiksavimo varžtas	Sprostgredzens	Borgbout
189	Vite di regolazione	Reguliavimo varžtas	Regulēšanas skrūve	Stelbout
190	Maniglia	Kėlimo rankena	Rokturis	Ophangbeugel
193	Tappo dell'olio	Alyvos varžtas	Eļļas aizgrieznis	Inbusbout
193a	Olio	Alyva	Eļļa	Olie
194	Guarnizione	Tarpiklis	Blīvslēgs	Pakking ring
198	O-ring	O žiedas	Apaļa šķērsgriezuma blīvgredzens	O-ring

Pos.	Opis PL	Descrição PT	Instalaţie fixă RO	Naziv RS
6a	Kołek	Pino	Pin	Klin
7a	Nit	Rebite	Nit	Zakovica
9a	Klin	Chaveta	Cheie	Klin
26a	Pierścień O-ring	O-ring	Inel tip O	O-prsten
37	Pierścień O-ring	O-ring	Inel tip O	O-prsten
37a	Pierścień O-ring	O-ring	Inel tip O	O-prsten
37b	Pierścień O-ring	O-ring	Inel tip O	O-prsten

Pos.	Opis PL	Descrição PT	Instalaţie fixă RO	Naziv RS
48	Stator	Estator	Stator	Stator
48a	Listwa przyłączeniowa	Caixa terminal	Înveliş stator	Priključna letva
49	Wirnik	Impulsor	Rotor	Propeler
50	Korpus pompy	Voluta da bomba	Carcasă pompa	Kućište pumpe
55	Obudowa statora	Carcaça do estator	Carcasă stator	Stator kućišta
58	Mocowanie uszczelnienia wału	Suporte do empanque	Etanşare	Nosač zaptivanja osovine
66	Pierścień mocujący	Anilha de fixação	Inel închidere	Prsten pričvršćivanja
76	Tabliczka znamionowa	Chapa de características	Etichetă	Pločica za obeležavanje
92	Zacisk	Grampo	Şurub	Obujmica spajanja
102	Pierścień O-ring	O-ring	Inel tip O	O-prsten
103	Tulejka	Anilha	Bucşă	Čaura
104	Pierścień uszczelniający	Anilha de empanque	Inel etanşare	Zaptivni prsten
105 105a	Uszczelnienie wału	Empanque	Etanşare	Zaptivka osovine
107	Pierścień O-ring	O-ring	Inel tip O	O-prsten
150a	Obudowa statora, kompletny	Carcaça do estator, completo	Carcasă stator, complet	Stator kućišta, kompletan
153	Łożysko	Rolamento	Rulment	Kuglični ležaj
153b	Pierścień zaciskowy	Anel de fixação	Inel de blocare	Osigurač
154	Łożysko	Rolamento	Rulment	Kuglični ležaj
155	Komorze olejowej	Compartimento do óleo	Camera de ulei	Uljnoj komori
158	Sprężyna falista	Mola	Arc canelat	Sigurnosni prste
159	Pierścień O-ring	Anilha	Inel tip O	O-prsten
162	Tarcza	Base de desgaste	Placă uzată	Ploča
172	Rotor/wał	Rotor/veio	Rotor/ax	Rotor/osovina
173	Śruba	Parafuso	Filet	Zavrtanj
173a	Podkładka	Anilha	Spălător	Prsten podloške
176	Część zewn. wtyczki	Parte interna do bujão	Cablu conector intrare	Unutrašnji deo konektora
181	Część wewn. wtyczki	Parte externa do bujão	Cablu conector ieşire	Spoljni deo konektora
185	Pierścień O-ring	O-ring	Inel tip O	O-prsten
187	Pierścień O-ring	O-ring	Inel tip O	O-prsten
188	Śruba	Parafuso	Filet	Zavrtanj
188a	Śruba	Parafuso	Filet	Zavrtanj
188b	Śruba mocująca	Parafuso de segurança	Şurub de fixare	Zavrtanj
189	Śruba regulacyjna	Parafuso de ajuste	Şurub de ajustare	Zavrtanj za podešavanje
190	Uchwyt	Suporte de elevação	Måner	Ručica
193	Śruba olejowa	Parafuso do óleo	Şurub ulei	Zavrtanj za ulje
193a	Olej	Óleo	Ulei	Ulje
194	Uszczelka	Junta	Spălător	Podloška
198	Pierścień O-ring	O-ring	Inel tip O	O-prsten

Pos.	Наименование RU	Beskrivning SE	Opis SI
6a	Штифт	Stift	Zatič
7a	Заклепка	Nit	Zakovica
9a	Шпонка	Kil	Ključ
26a	Уплотнительное кольцо круглого сечения	O-ring	O-obroč
37	Уплотнительное кольцо круглого сечения	O-ring	O-obroč
37a	Уплотнительное кольцо круглого сечения	O-ring	O-obroči
37b	Уплотнительное кольцо круглого сечения	O-ring	O-obroči
48	Статор	Stator	Stator
48a	Клеммная колодка	Kopplingsplint	Priključna letvica
49	Рабочее колесо	Pumphjul	Tekalno kolo
50	Корпус насоса	Pumphus	Ohišje črpalke
55	Корпус статора	Statorhus	Ohišje statorja
58	Корпус уплотнения вала	Axeltätningshållare	Nosilec tesnila osi
66	Стопорная шайба	Låsring	Zaklepni obroček
76	Фирменная табличка с номинальными техническимиданными	Typskylt	Tipska ploščica
92	Хомут	Spännband	Sponka
102	Уплотнительное кольцо круглого сечения	O-ring	O-obroč
103	Втулка	Bussning	Podloga ležaja
104	Уплотнительное кольцо	Simmerring	Tesnilni obroč
105 105a	Уплотнение вала	Axeltätning	Tesnilo osi
107	Уплотнительное кольцо круглого сечения	O-ring	O-obroči
150a	Корпус статора, полный	Statorhus, komplett	Ohišje statorja, popolna
153	Подшипник	Lager	Ležaj
153b	Стопорное кольцо	Låsring	Varovalni obroč
154	Подшипник	Lager	Ležaj
155	Масляная камера	Oljekammare	Oljni komori
158	Упорное нажимное кольцо	Fjäder	Vzmet
159	Уплотнительное кольцо круглого сечения	Bricka	O-obroč
162	Нижняя крышка	Slitplatta	Obrabna plošča
172	Ротор/вал	Rotor/axel	Rotor/os
173	Винт	Skruv	Vijak
173a	Шайба	Bricka	Tesnilni obroč
176	Внутренняя часть разъема кабеля	Kontakt, inre del	Notranji vtični del
181	Наружная часть разъема кабеля	Kontakt, yttre del	Zunanji vtični del
185	Уплотнительное кольцо круглого сечения	O-ring	O-obroč
187	Уплотнительное кольцо круглого сечения	O-ring	O-obroč
188	Винт	Skruv	Vijak
188a	Винт	Skruv	Vijak
188b	Болт	Låsskruv	Varnostni vijak
189	Регулировочный винт	Justerskruv	Nastavitveni vijak

Pos.	Наименование RU	Beskrivning SE	Opis SI
190	Ручка	Lyftbygel	Ročaj
193	Резьбовая пробка	Oljeskruv	Oljni vijak
193a	Масло	Olja	Olje
194	Прокладка	Packning	Tesnilni obroč
198	Уплотнительное кольцо круглого сечения	O-ring	O-obroč

Pos.	Popis SK	Tanım TR	描述 CN	الوصف AR
6a	Kolík	Pim	针脚	مسمار محور
7a	Nýt	Perçin	铆钉	مسمار برشام
9a	Pero	Anahtar	按钮	مفتاح
26a	O-krúžok	O-ring	O 型圈	حلقة دائرية
37	O-krúžok	O-ring	O 型圈	حلقة دائرية
37a	O-krúžky	O-ringler	O 型圈	حلقة دائرية
37b	O-krúžky	O-ringler	O 型圈	حلقة دائرية
48	Stator	Stator	定子	ساكن
48a	Svorkovnica	Klemens bağlantısı	接线板	لوحة التوصيلات الكهربائية
49	Obežné koleso	Çark	叶轮	الدافعة
50	Teleso čerpadla	Pompa gövdesi	泵壳	غلاف المضخة
55	Teleso statora	Stator muhafazası	定子外壳	غلاف الساكن
58	Unášač upchávky	Salmastra taşıyıcı	轴封载体	حامل مانع تسرب عمود الإدارة
66	Poistný krúžok	Kilitleme halkası	锁环	حلقة زنق
76	Typový štítok	Bilgi etiketi	铭牌	لوحة بيانات الموديل
92	Fixačná objímka	Kelepçe	卡箍	المشبك
102	O-krúžok	O-ring	O 型圈	حلقة دائرية
103	Púzdro	Burç	衬套	جلبة
104	Tesniaci krúžok	Sızdırmazlık halkası	密封环	حلقة سد
105 105a	Hriadeľová upchávka	Salmastra	轴密封	مانع تسرب عمود الإدارة
107	O-krúžky	O-ringler	O 型圈	حلقة دائرية
150a	Teleso statora, úplný	Stator muhafazası, tam	定子外壳，完整	غلاف الساكن، مكتمل.
153	Ložisko	Rulman	轴承	كرسي تحميل
153b	Poistný krúžok	Kilit halkası	锁环	حلقة زنق
154	Ložisko	Rulman	轴承	كرسي تحميل
155	Olejovej komore	Yağ bölmesi	油室	حجرة الزيت
158	Tlačná pružina	Oluklu yay	波纹弹簧	نابض مموج
159	O-krúžok	O-ring	O 型圈	حلقة دائرية
162	Tesniaca doska	Aşınma plakası	耐磨护板	لوح مقاوم للبري
172	Rotor/hriadeľ	Rotor/mil	转子/轴	العضو الدوار/عمود الإدارة

Pos.	Popis SK	Tanım TR	描述 CN	الوصف AR
173	Skrutka	Vida	螺丝	مسمار
173a	Podložka	Pul	垫圈	حلقة إحكام الربط
176	Vnútorná čas	İç fiş kısmı	内部插头组件	الجزء الداخلي للقابس
181	Vonkajšia čas	Dış fiş kısmı	外部插头组件	الجزء الخارجي للقابس
185	O-krúžok	O-ring	O 型圈	حلقة دائرية
187	O-krúžok	O-ring	O 型圈	حلقة دائرية
188	Skrutka	Vida	螺丝	مسمار
188a	Skrutka	Vida	螺丝	مسمار
188b	Poistná skrutka	Tespit vidası	锁定螺丝	مسمار القفل
189	Nastavovacia skrutka	Ayar vidası	调节螺丝	مسمار الضبط
190	Dvíhacia rukoväť	Kaldırma kolu	起吊支架	كتيفة الرفع
193	Olejová zátka	Yağ vidası	放油螺丝	مسمار الزيت
193a	Olej	Yağ	机油	الزيت
194	Tesniaci krúžok	Conta	垫圈	حشية
198	O-krúžok	O-ring	O 型圈	حلقة دائرية

Pos.	Lýsing IS
6a	Pinni
7a	Hnoðnagli
9a	Lykill
26a	O-hringur
37	O-hringur
37a	O-hringir
37b	O-hringir
48	Sátur
48a	Tengibretti
49	Dæluhjól
50	Dæluhlíf
55	Sáturhús
58	Haldari fyrir öxulþétti
66	Láshringur
76	Merkiplata
92	Klemma
102	O-hringur
103	Hólkur
104	Þéttihringur
105 105a	Öxulþétti
107	O-hringir

Pos.	Lýsing IS
150a	Sáturhús, fullbúið
153	Lega
153b	Láshringur
154	Lega
155	Olíuhólf
158	Rifflaður gormur
159	O-hringur
162	Notaplötu
172	Snúður/drifskaft
173	Skrúfa
173a	Skinna
176	Innri hluti tengis
181	Ytri hluti tengis
185	O-hringur
187	O-hringur
188	Skrúfa
188a	Skrúfa
188b	Greiningarskrúfur
189	Stilliskrúfa
190	Lyftifesting
193	Olíuskrúfa
193a	Olía
194	Pakkning
198	O-hringur

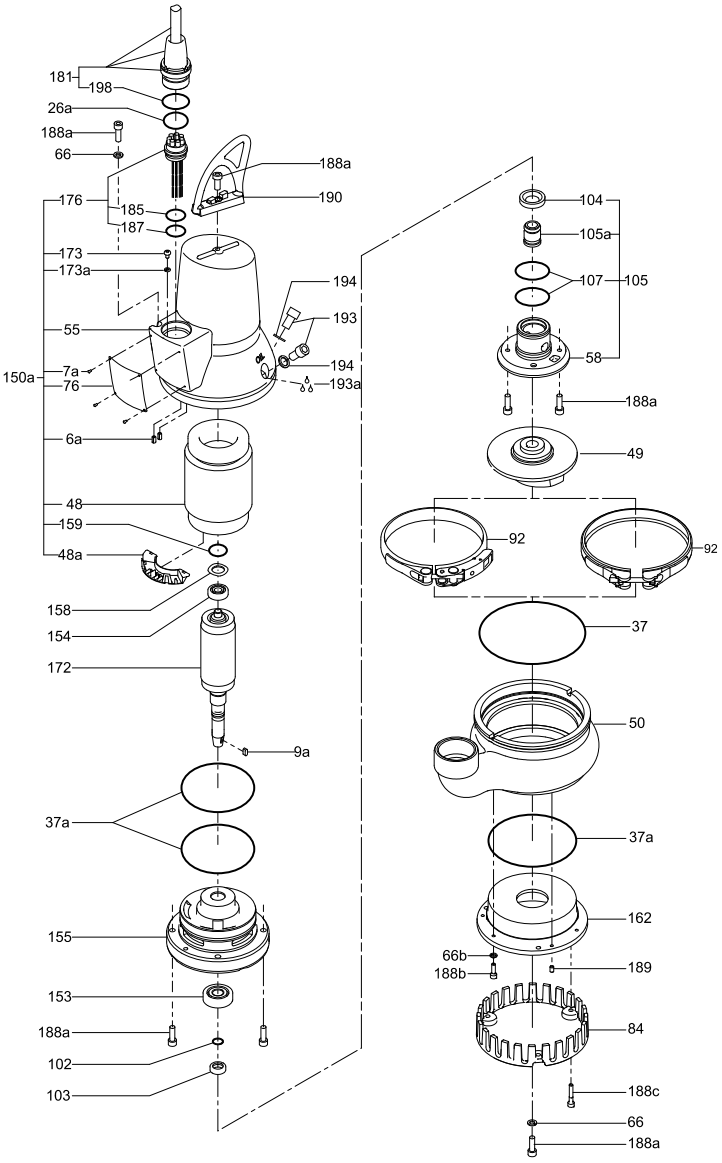

Exploded view of DP10.50 pump

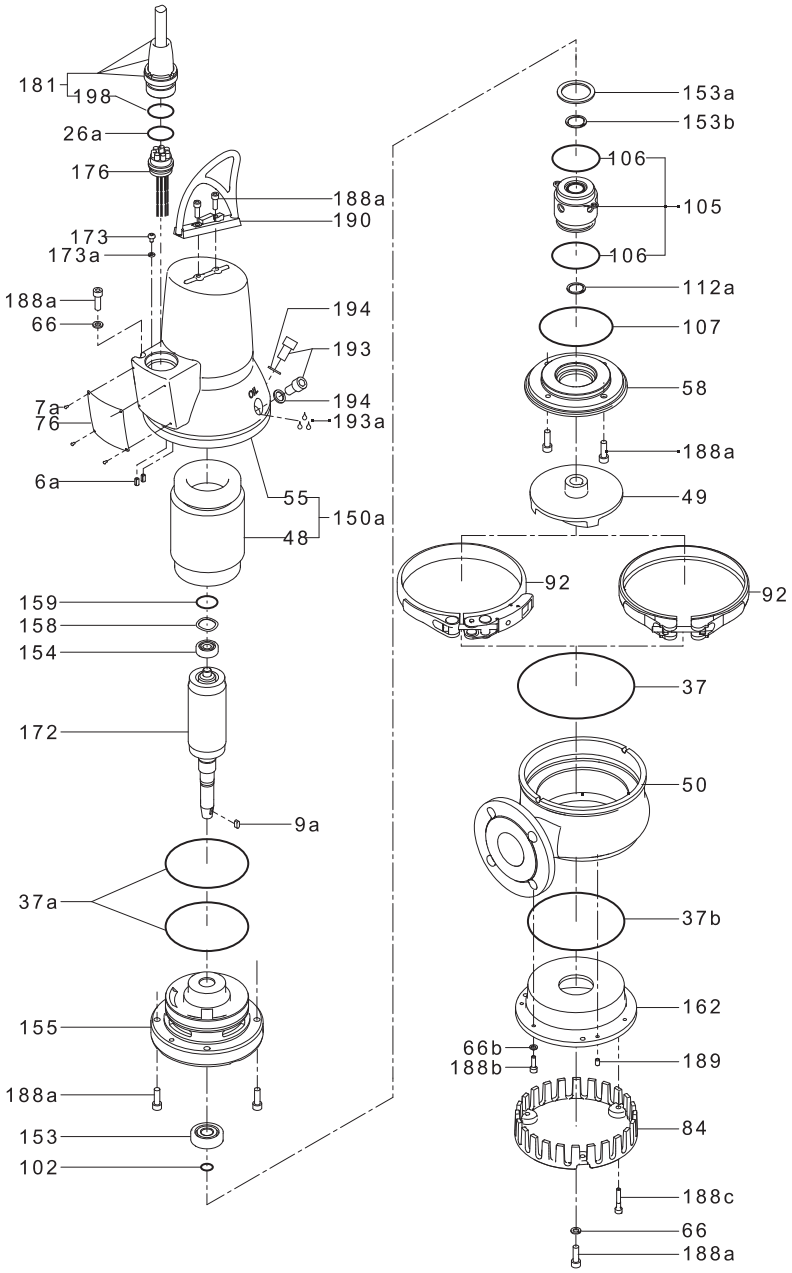

Exploded view of DP10.65 pump

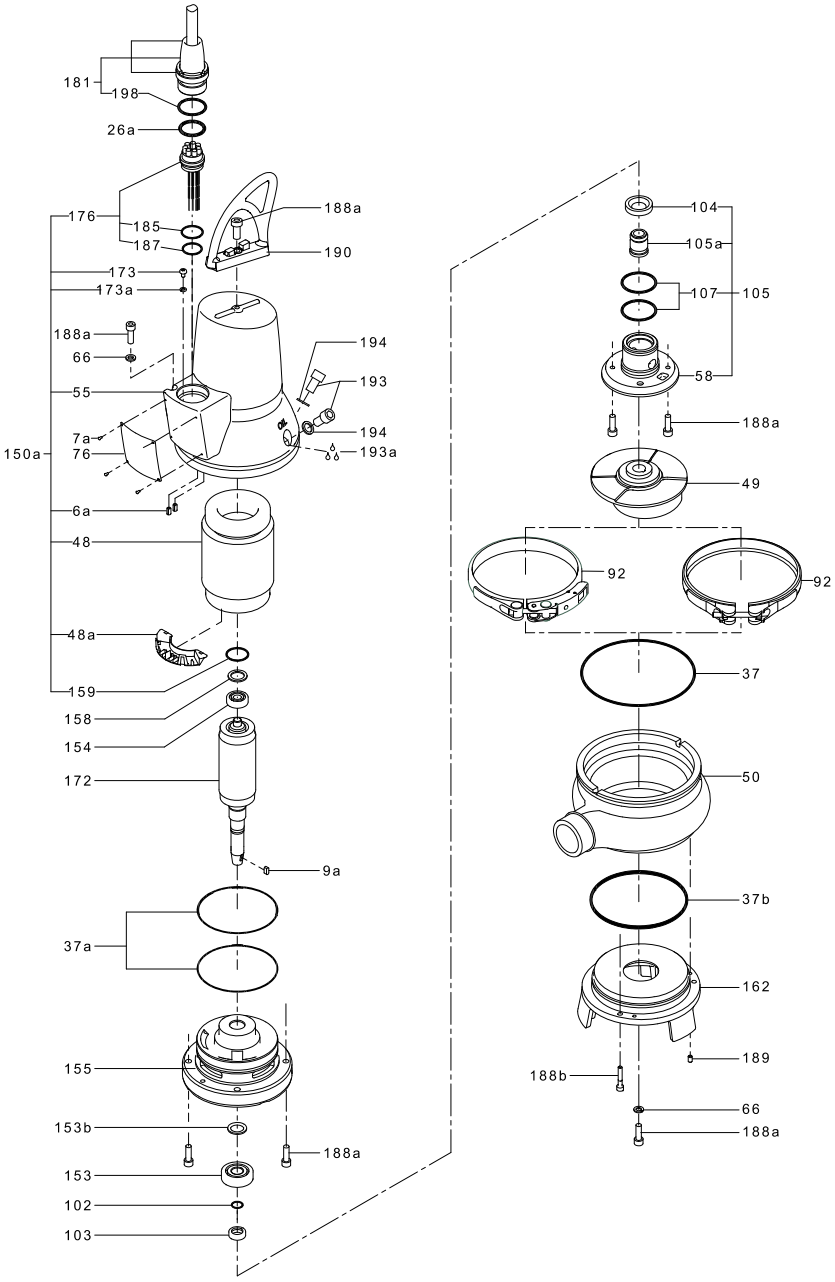

Exploded view of EF30.50 pump

Pos.	Description GB	Описание BG	Popis CZ
6a	Pin	Щифт	Kolík
7a	Rivet	Нит	Nýt
9a	Key	Фиксатор	Pero
2	O-ring	О-пръстен	O-kroužek
37	O-ring	О-пръстен	O-kroužek
3	O-ring	О-пръстени	O-kroužky
3	O-ring	О-пръстени	O-kroužky
48	Stator	Статор	Stator
4	Terminal board	Клеморед	Svorkovnice
49	Impeller	Работно колело	Oběžné kolo
50	Pump housing	Помпен корпус	Těleso čerpadla
55	Stator housing	Корпус на статора	Těleso statoru
58	Shaft seal carrier	Носач на уплътнението при вала	Unašeč ucpávky
66	Locking ring	Фиксиращ пръстен	Pojistný kroužek
6	Washer	Шайба	Podložka
76	Nameplate	Табела	Typový štítek
84	Suction strainer	Смукателна решетка	Sací síto
92	Clamp	Скоба	Fixační objímka
102	O-ring	О-пръстен	O-kroužek
103	Bush	Втулка	Pouzdro
104	Seal ring	Уплътняващ пръстен	Těsnicí kroužek
105 10	Shaft seal	Уплътнение при вала	Hřídelová ucpávka
106	O-ring	О-пръстени	O-kroužky
107	O-ring	О-пръстени	O-kroužky
11	Locking ring	Застопоряващ пръстен	Pojistný kroužek
15	Stator housing complete	Корпус на статора, пълен	Těleso statoru, kompletní
153	Bearing	Лагер	Ložisko
15	Lock washer	Стопорна шайба	Pojistná podložka
15	Locking ring	Застопоряващ пръстен	Pojistný kroužek
154	Bearing	Лагер	Ložisko
155	Oil chamber	Маслото в камерата	Olejové komoře
158	Corrugated spring	Гофрирана пружина	Tlačná pružina
159	O-ring	О-пръстен	O-kroužek
162	Wear plate	Износваща се плоча	Těsnicí deska
172	Rotor/shaft	Ротор/вал	Rotor/hřídel
173	Screw	Винт	Šroub
17	Washer	Шайба	Podložka
176	Inner plug part	Вътрешна част на щепсела	Vnitřní část kabelové průchodky
181	Outer plug part	Външна част на щепсела	Vnější část kabelové průchodk

Pos.	Description GB	Описание BG	Popis CZ
185	O-ring	О-пръстен	O-kroužek
187	O-ring	О-пръстен	O-kroužek
18	Screw	Винт	Šroub
18	Locking screw	Фиксиращ винт	Pojistný šroub
188c	Screw	Винт	Šroub
189	Adjusting screw	Винт за настройка	Stavěcí šroub
190	Lifting bracket	Ръкохватка	Zvedací rukoje
193	Oil screw	Винт при камерата за масло	Olejová zátka
19	Oil	Масло	Olej
194	Gasket	Гарнитура	Těsnicí kroužek
198	O-ring	О-пръстен	O-kroužek

Pos.	Beschreibung DE	Beskrivelse DK	Seletus EE	Descripción ES
6a	Stift	Stift	Tihvt	Pasador
7a	Kerbnagel	Nitte	Neet	Remache
9a	Keil	Feder	Kiil	Chaveta
2	O-Ring	O-ring	O-ring	Junta tórica
37	O-Ring	O-ring	O-ring	Junta tórica
3	O-Ring	O-ring	O-ring	Junta tórica
3	O-Ring	O-ring	O-ring	Junta tórica
48	Stator	Stator	Staator	Estator
4	Klemmbrett	Klembræt	Klemmliist	Caja de conexiones
49	Laufrad	Løber	Tööratas	Impulsor
50	Pumpengehäuse	Pumpehus	Pumbapesa	Cuerpo de bomba
55	Statorgehäuse	Statorhus	Staatori korpus	Alojamiento de estator
58	Dichtungshalter	Akseltætningsholder	Võllitihendi alusplaat	Soporte de cierre
66	Sicherungsring	Låsering	Lukustusrõngas	Anillo de cierre
6	Unterlegscheibe	Skive	Seib	Arandela
76	Leistungsschild	Typeskilt	Andmeplaat	Placa de identificación
84	Einlaufsieb	Indløbssi	Imisõel	Filtro de aspiración
92	Spannband	Spændebånd	Klamber	Abrazadera
102	O-Ring	O-ring	O-ring	Junta tórica
103	Buchse	Bøsning	Puks	Casquillo
104	Dichtungsring	Simmerring	Tihend	Anillo de cierre
105 10	Wellenabdichtung	Akseltætning	Võllitihend	Cierre
106	O-Ring	O-ring	O-ring	Junta tórica
107	O-Ring	O-ring	O-ring	Junta tórica
11	Sicherungsring	Låsering	Lukustusrõngas	Anillo de bloqueo

Pos.	Beschreibung DE	Beskrivelse DK	Seletus EE	Descripción ES
15	Statorgehäuse, komplett	Statorhus, komplet	Staatori korpus, täielik	Alojamiento de estator, completo
153	Lager	Leje	Laager	Cojinete
15	Sicherungsscheibe	Låseskive	Lukustussei	Arandela de seguridad
15	Sicherungsring	Låsering	Lukustusrõngas	Anillo de bloqueo
154	Lager	Leje	Laager	Cojinete
155	Ölsperrkammer	Oliekammer	Õlikamber	Cámara de aceite
158	Gewellte Feder	Bølgefjeder	Vedruseib	Muelle ondulado
159	O-Ring	Skive	O-ring	Arandela
162	Verschleißplatte	Slidplade	Pumbapesa põhi	Placa de desgaste
172	Rotor/Welle	Rotor/aksel	Rootor/võll	Rotor/eje
173	Schraube	Skrue	Polt	Tornillo
17	Unterlegscheibe	Skive	Seib	Arandela
176	Kabelanschluss, innerer Teil	Indvendig stikdel	Pistiku sisemine pool	Parte de clavija interior
181	Kabelanschluss, äußerer Teil	Udvendig stikdel	Pistiku välimine pool	Parte de clavija exterior
185	O-Ring	O-ring	O-ring	Junta tórica
187	O-Ring	O-ring	O-ring	Junta tórica
18	Schraube	Skrue	Polt	Tornillo
18	Sicherungsschraube	Låseskrue	Lukustusrõngas	Tornillo de apriete
188c	Schraube	Skrue	Polt	Tornillo
189	Justierschraube	Justerskrue	Reguleerimiskruvi	Tornillo de ajuste
190	Transportbügel	Løftebøjle	Tõsteaas	Asa
193	Ölschraube	Olieskrue	Õlikambri kork	Tornillo de aceite
19	Öl	Olie	Õli	Aceite
194	Dichtung	Pakning	Tihend	Junta
198	O-Ring	O-ring	O-ring	Junta tórica

Pos.	Kuvaus FI	Description FR	РесйгсбцЮ GR	Opis HR
6a	Tappi	Broche	Πείρος	Nožica
7a	Niitti	Rivet	Πριτσίνι	Zarezani čavao
9a	Kiila	Clavette	Κλειδί	Opruga
2	O-rengas	Joint torique	Δακτύλιος-Ο	O-prsten
37	O-rengas	Joint torique	Δακτύλιος-Ο	O-prsten
3	O-rengas	Joint torique	Δακτύλιος-Ο	O-prsten
3	O-rengas	Joint torique	Δακτύλιος-Ο	O-prsten
48	Staattori	Stator	Στάτης	stator
4	Kytkentälevy	Bornier	Κλέμες σύνδεσης	priključna letvica
49	Juoksupyörä	Roue	Πτερωτή	rotor
50	Pumppupesä	Corps de pompe	Περίβλημα αντλίας	kućište crpke

Pos.	Kuvaus FI	Description FR	РесйгсбцЮ GR	Opis HR
55	Staattoripesä	Logement de stator	Περίβλημα στάτη	kućište statora
58	Akselitiivistekannatin	Support de garniture mécanique	Φορέας στυπιοθλίπτη άξονα	držač brtve
66	Lukkorengas	Anneau de serrage	Ασφαλιστικός δακτύλιος	sigurnosni prsten
6	Aluslevy	Joint torique	Ροδέλα	O-prsten
76	Arvokilpi	Plaque signalétique	Πινακίδα	natpisna pločica
84	Imusihti	Crépine d'aspiration	Φίλτρο αναρρόφησης	ulazno sito
92	Kiinnityspanta	Collier de serrage	Σφιγκτήρας	zatezna traka
102	O-rengas	Joint torique	Δακτύλιος-Ο	O-prsten
103	Holkki	Douille	Αντιτριβικός δακτύλιος	brtvenica
104	Tiivisterengas	Anneau d'étanchéité	Στεγανοποιητικός δακτύλιος	brtveni prsten
105 10	Akselitiiviste	Garniture mécanique	Στυπιοθλίπτης άξονα	brtva vratila
106	O-rengas	Rondelle	Δακτύλιος-Ο	podložna pločica
107	O-rengas	Joint torique	Δακτύλιος-Ο	O-prsten
11	Lukkorengas	Collier de serrage	Ασφαλιστικός δακτύλιος	Stezni prsten
15	Staattoripesä, kokonainen	Logement de stator, complet	Περίβλημα στάτη, πλήρης	kućište statora, sav
153	Laakeri	Roulement	Έδρανο	ležaj
15	Lukkoaluslevy	Rondelle de blocage	Ροδέλα ασφαλείας	Sigurnosna podloška
15	Lukkorengas	Collier de serrage	Ασφαλιστικός δακτύλιος	Stezni prsten
154	Laakeri	Roulement	Έδρανο	ležaj
155	Öljytila	Chambre à huile	Θάλαμος λαδιού	komora za ulje
158	Aaltojousi	Ressort ondulé	Αυλακωτό ελατήριο	valovita opruga
159	Aluslevy	Joint torique	Ροδέλα	O-prsten
162	Kulutuslevy	Plaque d'usure	Πλάκα φθοράς	žrtvena pločica
172	Roottori/akseli	Rotor/arbre	Ρότορας/άξονας	rotor/vratilo
173	Ruuvi	Vis	Βίδα	vijak
17	Aluslevy	Rondelle	Ροδέλα	podložna pločica
176	Sisäpuolinen tulppaosa	Partie intérieure de la fiche	Εσωτερικό τμήμα φις	kabel. priključak, nutarnji dio
181	Ulkopuolinen tulppaosa	Partie extérieure de la fiche	Εξωτερικό τμήμα φις	kabel. priključak, vanjski dio
185	O-rengas	Joint torique	Δακτύλιος-Ο	O-prsten
187	O-rengas	Joint torique	Δακτύλιος-Ο	O-prsten
18	Ruuvi	Vis	Βίδα	vijak
18	Lukitusruuvi	Vis de fixation	Βίδα συγκράτησης	sigurnosni vijak
188c	Ruuvi	Vis	Βίδα	vijak
189	Säätöruuvi	Vis d'ajustement	Βίδα ρύθμισης	vijak za justiranje
190	Nostosanka	Poignée de levage	Χειρολαβή	transportni stremen
193	Öljytulppa	Bouchon d'huile	Βίδα λαδιού	vijak za ulje

Pos.	Kuvaus FI	Description FR	РесйгсбцЮ GR	Opis HR
19	Öljy	Huile	Λάδι	ulje
194	Tiiviste	Joint d'étanchéité	Τσιμούχα	brtva
198	O-rengas	Joint torique	Δακτύλιος-Ο	O-prsten

Pos.	Megnevezés HU	Descrizione IT	Aprašymas LT	Apraksts LV
6a	Csap	Perno	Vielokaištis	Tapa
7a	Szegecs	Rivetto	Kniedė	Kniede
9a	Rögzítőék	Chiavetta	Kaištis	Atslēga
2	O-gyűrű	O-ring	O žiedas	Apaļa šķērsgriezuma blīvgredzens
37	O-gyűrű	O-ring	O žiedas	Apaļa šķērsgriezuma blīvgredzens
3	O-gyűrűk	O-ring	O žiedas	Apaļa šķērsgriezuma blīvgredzens
3	O-gyűrűk	O-ring	O žiedas	Apaļa šķērsgriezuma blīvgredzens
48	Állórész	Statore	Statorius	Stators
4	Kapcsoló tábla	Morsettiera	Kontaktų plokštė	Spaiļu plate
49	Járókerék	Girante	Darbaratis	Darbrats
50	Szivattyúház	Corpo pompa	Siurblio korpusas	Sūkņa korpuss
55	Állórészház	Cassa statore	Statoriaus korpusas	Statora korpuss
58	Tengelytömítés-keret	Supporto tenuta meccanica	Veleno sandariklio lizdas	Vārpstas blīvējuma turētājs
66	Rögzítőgyűrű	Anello di arresto	Fiksavimo žiedas	Sprostgredzens
6	Alátét	O-ring	Poveržlė	Apaļa šķērsgriezuma blīvgredzens
76	Adattábla	Targhetta di identificazione	Vardinė plokštelė	Pases datu plāksnīte
84	Szívókosár	Griglia di aspirazione	Įsiurbimo koštuvas	Sietfiltrs iesūkšanas pusē
92	Bilincs	Fascetta	Apkaba	Apskava
102	O-gyűrű	O-ring	O žiedas	Apaļa šķērsgriezuma blīvgredzens
103	Tömítőgyűrű	Bussola	Įvorė	Ieliktnis
104	Tömítőgyűrű	Anello di tenuta	Sandarinimo žiedas	Blīvējošais gredzens
105 10	Tengelytömítés	Tenuta meccanica	Veleno sandariklis	Vārpstas blīvējums
106	O-gyűrűk	Rondella	O žiedas	Paplāksne
107	O-gyűrűk	O-ring	O žiedas	Apaļa šķērsgriezuma blīvgredzens
11	Rögzítőgyűrű	Anello di blocco	Fiksavimo žiedas	Sprostgredzens
15	Állórészház, teljes	Cassa statore, completo	Statoriaus korpusas, pilnas	Statora korpuss, viss
153	Csapágy	Cuscinetto	Guolis	Gultnis
15	Rögzítő alátét	Rondella di sicurezza	Fiksavimo poveržlė	Sprostpaplāksne
15	Rögzítőgyűrű	Anello di blocco	Fiksavimo žiedas	Sprostgredzens
154	Csapágy	Cuscinetto	Guolis	Gultnis
155	Olajkamra	Camera dell'olio	Alyvos kamera	Eļļas kamera
158	Hullámrugó	Molla ondulata	Rifliuota spyruoklė	Viļņotā atspere
159	O-gyűrű	O-ring	O žiedas	Apaļa šķērsgriezuma blīvgredzens

Pos.	Megnevezés HU	Descrizione IT	Aprašymas LT	Apraksts LV
162	Kopóelem	Flangia	Dilimo plokštelė	Nodiluma platne
172	Forgórész/tengely	Gruppo rotore/albero	Rotorius/velenas	Rotors/vārpsta
173	Csavar	Vite	Varžtas	Skrūve
17	Alátét	Rondella	Poveržlė	Paplāksne
176	Belső kábelbevezetés	Parte interna del connettore	Vidinė kištuko dalis	Spraudņa iekšējā daļa
181	Külső kábelbevezetés	Parte esterna del connettore	Išorinė kištuko dalis	Spraudņa ārējā daļa
185	O-gyűrű	O-ring	O žiedas	Apaļa šķērsgriezuma blīvgredzens
187	O-gyűrű	O-ring	O žiedas	Apaļa šķērsgriezuma blīvgredzens
18	Csavar	Vite	Varžtas	Skrūve
18	Rögzítő csavar	Vite di chiusura	Fiksavimo varžtas	Sprostgredzens
188c	Csavar	Vite	Varžtas	Skrūve
189	Beállító csavar	Vite di regolazione	Reguliavimo varžtas	Regulēšanas skrūve
190	Emelőfül	Maniglia	Kėlimo rankena	Rokturis
193	Olajtöltőnyílás zárócsavarja	Tappo dell'olio	Alyvos varžtas	Eļļas aizgrieznis
19	Olaj	Olio	Alyva	Eļļa
194	Tömítés	Guarnizione	Tarpiklis	Blīvslēgs
198	O-gyűrű	O-ring	O žiedas	Apaļa šķērsgriezuma blīvgredzens

Pos.	Omschrijving NL	Opis PL	Descrição PT	Instalaţie fixă RO
6a	Paspen	Kołek	Pino	Pin
7a	Klinknagel	Nit	Rebite	Nit
9a	Spie	Klin	Chaveta	Cheie
2	O-ring	Pierścień O-ring	O-ring	Inel tip O
37	O-ring	Pierścień O-ring	O-ring	Inel tip O
3	O-ring	Pierścień O-ring	O-ring	Inel tip O
3	O-ring	Pierścień O-ring	O-ring	Inel tip O
48	Stator	Stator	Estator	Stator
4	Aansluitblok	Listwa przyłączeniowa	Caixa terminais	Înveliş stator
49	Waaier	Wirnik	Impulsor	Rotor
50	Pomphuis	Korpus pompy	Voluta da bomba	Carcasă pompa
55	Motorhuis	Obudowa statora	Carcaça do motor	Carcasă stator
58	Dichtingsplaat	Mocowanie uszczelnienia wału	Suporte do empanque	Etanşare
66	Borgring	Pierścień mocujący	Anilha de fixação	Inel închidere
6	Ring	Podkładka	Anilha	Spălător
76	Typeplaatje	Tabliczka znamionowa	Chapa de características	Etichetă
84	Zuigkorf	Sito pompy	Grelha de aspiração	Filtru de aspiraţie

Pos.	Omschrijving NL	Opis PL	Descrição PT	Instalaţie fixă RO
92	Span ring	Zacisk	Grampo	Şurub
102	O-ring	Pierścień O-ring	O-ring	Inel tip O
103	Bus	Tulejka	Anilha	Bucşă
104	Olie keerring	Pierścień uszczelniający	Anilha do empanque	Inel etanşare
105 10	As afdichting	Uszczelnienie wału	Empanque	Etanşare
106	O-ring	Pierścień O-ring	O-ring	Inel tip O
107	O-ring	Pierścień O-ring	O-ring	Inel tip O
11	Vergrendelingsring	Pierścień zaciskowy	Anel de fixação	Inel de blocar
15	Motorhuis, compleet	Obudowa statora, kompletny	Carcaça do estator, completo	Carcasă stator, complet
153	Kogellager	Łożysko	Rolamento	Rulment
15	Borgring	Podkładka blokująca	Anilha de bloqueio	Şaibă de blocare
15	Vergrendelingsring	Pierścień zaciskowy	Anel de fixação	Inel de blocar
154	Kogellager	Łożysko	Rolamento	Rulment
155	Oliekamer	Komorze olejowej	Compartimento do óleo	Camera de ulei
158	Drukring	Sprężyna falista	Mola	Arc canelat
159	Ring	Pierścień O-ring	Anilha	Inel tip O
162	Slijtplaat	Tarcza	Base de desgaste	Placă uzată
172	Rotor/as	Rotor/wał	Rotor/veio	Rotor/ax
173	Schroef	Śruba	Parafuso	Filet
17	Ring	Podkładka	Anilha	Spălător
176	Kabel connector inwendig	Część zewn. wtyczki	Parte interna do bujão	Cablu conector intrare
181	Kabel connector uitwendig	Część wewn. wtyczki	Parte externa do bujão	Cablu conector ieşire
185	O-ring	Pierścień O-ring	O-ring	Inel tip O
187	O-ring	Pierścień O-ring	O-ring	Inel tip O
18	Inbusbout	Śruba	Parafuso	Filet
18	Borgbout	Śruba mocująca	Parafuso de segurança	Şurub de fixare
188c	Inbusbout	Śruba	Parafuso	Filet
189	Stelbout	Śruba regulacyjna	Parafuso de ajuste	Şurub de ajustare
190	Ophangbeugel	Uchwyt	Suporte de elevação	Mâner
193	Inbusbout	Śruba olejowa	Parafuso do óleo	Şurub ulei
19	Olie	Olej	Óleo	Ulei
194	Pakking ring	Uszczelka	Junta	Spălător
198	O-ring	Pierścień O-ring	O-ring	Inel tip O

Pos.	Naziv RS	Наименование RU	Beskrivning SE
6a	Klin	Штифт	Stift
7a	Zakovica	Заклепка	Nit
9a	Klin	Шпонка	Kil

Pos.	Naziv RS	Наименование RU	Beskrivning SE
2	O-prsten	Уплотнительное кольцо круглого сечения	O-ring
37	O-prsten	Уплотнительное кольцо круглого сечения	O-ring
3	O-prsten	Уплотнительное кольцо круглого сечения	O-ring
3	O-prsten	Уплотнительное кольцо круглого сечения	O-ring
48	Stator	Статор	Stator
4	Priključna letva	Клеммная колодка	Kopplingsplint
49	Propeler	Рабочее колесо	Pumphjul
50	Kućište pumpe	Корпус насоса	Pumphus
55	Stator kućišta	Корпус статора	Statorhus
58	Nosač zaptivanja osovine	Корпус уплотнения вала	Axeltätningshållare
66	Prsten pričvršćivanja	Стопорная шайба	Låsring
6	Prsten podloške	Шайба	Bricka
76	Pločica za obeležavanje	Фирменная табличка с номинальными техническими данными	Typskylt
84	Usisni filter	Фильто	Sugsil
92	Obujmica spajanja	Хомут	Spännband
102	O-prsten	Уплотнительное кольцо круглого сечения	O-ring
103	Čaura	Втулка	Bussning
104	Zaptivni prsten	Уплотнительное кольцо	Simmerring
105 10	Zaptivka osovine	Уплотнение вала	Axeltätning
106	O-prsten	Уплотнительное кольцо круглого сечения	O-ring
107	O-prsten	Уплотнительное кольцо круглого сечения	O-ring
11	Osigurač	Стопорное кольцо	Låsring
15	Stator kućišta, kompletan	Корпус статора, полный	Statorhus, komplett
153	Kuglični ležaj	Подшипник	Lager
15	Sigurnosna podloška	Стопорная шайба	Låsbricka
15	Osigurač	Стопорное кольцо	Låsring
154	Kuglični ležaj	Подшипник	Lager
155	Uljnoj komori	Масляная камера	Oljekammare
158	Sigurnosni prste	Упорное нажимное кольцо	Fjäder
159	O-prsten	Уплотнительное кольцо круглого сечения	Bricka
162	Ploča	Нижняя крышка	Slitplatta
172	Rotor/osovina	Ротор/вал	Rotor/axel
173	Zavrtanj	Винт	Skruv
17	Prsten podloške	Шайба	Bricka
176	Unutrašnji deo konektora	Внутренняя часть разъема кабеля	Kontakt, inre del
181	Spoljni deo konektora	Наружная часть разъема кабеля	Kontakt, yttre del
185	O-prsten	Уплотнительное кольцо круглого сечения	O-ring
187	O-prsten	Уплотнительное кольцо круглого сечения	O-ring
18	Zavrtanj	Винт	Skruv

Pos.	Naziv RS	Наименование RU	Beskrivning SE
18	Zavrtanj	Болт	Låsskruv
188c	Zavrtanj	Винт	Skruv
189	Zavrtanj za podešavanje	Регулировочный винт	Justerskruv
190	Ručica	Ручка	Lyftbygel
193	Zavrtanj za ulje	Резьбовая пробка	Oljeskruv
19	Ulje	Масло	Olja
194	Podloška	Прокладка	Packning
198	O-prsten	Уплотнительное кольцо круглого сечения	O-ring

Pos.	Opis SI	Popis SK	Tanım TR	描述 CN
6a	Zatič	Kolík	Pim	针脚
7a	Zakovica	Nýt	Perçin	铆钉
9a	Ključ	Pero	Anahtar	按钮
2	O-obroč	O-krúžok	O-ring	O 型圈
37	O-obroč	O-krúžok	O-ring	O 型圈
3	O-obroči	O-krúžky	O-ringler	O 型圈
3	O-obroči	O-krúžky	O-ringler	O 型圈
48	Stator	Stator	Stator	定子
4	Priključna letvica	Svorkovnica	Klemens bağlantısı	接线板
49	Tekalno kolo	Obežné koleso	Çark	叶轮
50	Ohišje črpalke	Teleso čerpadla	Pompa gövdesi	泵壳
55	Ohišje statorja	Teleso statora	Stator muhafazası	定子外壳
58	Nosilec tesnila osi	Unášač upchávky	Salmastra taşıyıcı	轴封载体
66	Zaklepni obroček	Poistný krúžok	Kilitleme halkası	锁环
6	Tesnilni obroč	Podložka	Pul	垫圈
76	Tipska ploščica	Typový štítok	Bilgi etiketi	铭牌
84	Sesalno sito	Sacie sito	Emiş süzgeci	吸滤器
92	Sponka	Fixačná objímka	Kelepçe	卡箍
102	O-obroč	O-krúžok	O-ring	O 型圈
103	Podloga ležaja	Púzdro	Burç	衬套
104	Tesnilni obroč	Tesniaci krúžok	Sızdırmazlık halkası	密封环

Pos.	Opis SI	Popis SK	Tanım TR	描述 CN
105 10	Tesnilo osi	Hriadeľová upchávka	Salmastra	轴密封
106	O-obroči	O-krúžky	O-ringler	O 型圈
107	O-obroči	O-krúžky	O-ringler	O 型圈
11	Varovalni obroč	Poistný krúžok	Kilit halkası	锁环
15	Ohišje statorja, popolna	Teleso statora, úplný	Stator muhafazası, tam	定子外壳，完整的
153	Ležaj	Ložisko	Rulman	轴承
15	Varovalna podložka	Poistná podložka	Rondela	垫圈
15	Varovalni obroč	Poistný krúžok	Kilit halkası	锁环
154	Ležaj	Ložisko	Rulman	轴承
155	Oljni komori	Olejovej komore	Yağ bölmesi	油室
158	Vzmet	Tlačná pružina	Oluklu yay	波纹弹簧
159	O-obroč	O-krúžok	O-ring	O 型圈
162	Obrabna plošča	Tesniaca doska	Aşınma plakası	耐磨护板
172	Rotor/os	Rotor/hriadeľ	Rotor/mil	转子/轴
173	Vijak	Skrutka	Vida	螺丝
7	Tesnilni obroč	Podložka	Pul	垫圈
176	Notranji vtični del	Vnútorná čas	İç fiş kısmı	内部插头组件
181	Zunanji vtični del	Vonkajšia čas	Dış fiş kısmı	外部插头组件
185	O-obroč	O-krúžok	O-ring	O 型圈
187	O-obroč	O-krúžok	O-ring	O 型圈
18	Vijak	Skrutka	Vida	螺丝
18	Varnostni vijak	Poistná skrutka	Tespit vidası	锁定螺丝
188c	Vijak	Skrutka	Vida	螺丝
189	Nastavitveni vijak	Nastavovacia skrutka	Ayar vidası	调节螺丝
190	Ročaj	Dvíhacia rukoväť	Kaldırma kolu	起吊支架
193	Oljni vijak	Olejová zátka	Yağ vidası	放油螺丝
19	Olje	Olej	Yağ	机油
194	Tesnilni obroč	Tesniaci krúžok	Conta	垫圈
198	O-obroč	O-krúžok	O-ring	O 型圈

Pos.	الوصف AR	Lýsing IS
6a	مسمار محور	Pinni
7a	مسمار برشام	Hnoðnagli
9a	مفتاح	Lykill
2	حلقة دائرية	O-hringur
37	حلقة دائرية	O-hringur
3	حلقة دائرية	O-hringir
3	حلقة دائرية	O-hringir
48	ساكن	Sátur
4	لوحة التوصيلات الكهربائية	Tengibretti
49	الدافعة	Dæluhjól
50	غلاف المضخة	Dæluhlíf
55	غلاف الساكن	Sáturhús
58	حامل مانع تسرب عمود الإدارة	Haldari fyrir öxulþétti
66	حلقة زنق	Láshringur
6	حلقة إحكام الربط	Skinna
76	لوحة البيانات	Merkiplata
84	مرشح جهة السحب	Sog sía
92	المشبك	Klemma
102	حلقة دائرية	O-hringur
103	جلبة	Hólkur
104	حلقة سد	Þéttihringur
105 10	مانع تسرب عمود الإدارة	Öxulþétti
106	حلقة دائرية	O-hringir
107	حلقة دائرية	O-hringir
11	حلقة زنق	Láshringur
15	غلاف الساكن مكتمل	Statorhús, fullbúið
153	كرسي تحميل	Lega
15	حلقة إحكام الربط الخاصة بالقفل	Þvottavélar
15	حلقة زنق	Láshringur
154	كرسي تحميل	Lega
155	حجرة الزيت	Olíuhólf
158	نابض مموج	Rifflaður gormur
159	حلقة دائرية	O-hringur
162	لوح مقاوم للبري	Notaplötu
172	المسمار الأرضي	Snúður/drifskaft
173	مسمار	Skrúfa

Pos.	الوصف AR	Lýsing IS
17	حلقة إحكام الربط	Skinna
176	الجزء الداخلي للقابس	Innri hluti tengis
181	الجزء الخارجي للقابس	Ytri hluti tengis
185	حلقة دائرية	O-hringur
187	مسمار	O-hringur
18	مسمار القفل	Skrúfa
18	مسمار	Greiningarskrúfur
188c	مسمار الضبط	Skrúfa
189	كتيفة الرفع	Stilliskrúfa
190	مسمار الزيت	Lyftifesting
193	الزيت	Olíuskrúfa
19	حشية	Olía
194	حلقة دائرية	Pakkning
198	صمولة الزنق	O-hringur

Argentina
Bombas GRUNDFOS de Argentina S.A.
Ruta Panamericana km. 37.500industin
1619 - Garín Pcia. de B.A.
Tel.: +54-3327 414 444
Fax: +54-3327 45 3190

Australia
GRUNDFOS Pumps Pty. Ltd.
P.O. Box 2040
Regency Park
South Australia 5942
Tel.: +61-8-8461-4611
Fax: +61-8-8340-0155

Austria
GRUNDFOS Pumpen Vertrieb
Ges.m.b.H.
Grundfosstraße 2
A-5082 Grödig/Salzburg
Tel.: +43-6246-883-0
Fax: +43-6246-883-30

Belgium
N.V. GRUNDFOS Bellux S.A.
Boomsesteenweg 81-83
B-2630 Aartselaar
Tel.: +32-3-870 7300
Fax: +32-3-870 7301

Bosnia and Herzegovina
GRUNDFOS Sarajevo
Zmaja od Bosne 7-7A
BiH-71000 Sarajevo
Tel.: +387 33 592 480
Fax: +387 33 590 465
www.ba.grundfos.com
E-mail: grundfos@bih.net.ba

Brazil
BOMBAS GRUNDFOS DO BRASIL
Av. Humberto de Alencar Castelo
Branco, 630
CEP 09850 - 300
São Bernardo do Campo - SP
Tel.: +55-11 4393 5533
Fax: +55-11 4343 5015

Bulgaria
Grundfos Bulgaria EOOD
Slatina District
Iztochna Tangenta street no. 100
BG - 1592 Sofia
Tel.: +359 2 49 22 200
Fax: +359 2 49 22 201
E-mail: bulgaria@grundfos.bg

Canada
GRUNDFOS Canada inc.
2941 Brighton Road
Oakville, Ontario
L6H 6C9
Tel.: +1-905 829 9533
Fax: +1-905 829 9512

China
GRUNDFOS Pumps (Shanghai) Co. Ltd.
10F The Hub, No. 33 Suhong Road
Minhang District
Shanghai 201106 PRC
Tel.: +86 21 612 252 22
Fax: +86 21 612 253 33

Columbia
GRUNDFOS Colombia S.A.S.
Km 1.5 vía Siberia-Cota Conj. Potrero
Chico,
Parque Empresarial Arcos de Cota Bod.
1A.
Cota, Cundinamarca
Tel.: +57(1)-2913444
Fax: +57(1)-8764586

Croatia
GRUNDFOS CROATIA d.o.o.
Buzinski prilaz 38, Buzin
HR-10010 Zagreb
Tel.: +385 1 6595 400
Fax: +385 1 6595 499
www.hr.grundfos.com

Czech Republic
GRUNDFOS Sales Czechia and Slovakia
s.r.o.
Čajkovského 21
779 00 Olomouc
Tel.: +420-585-716 111

Denmark
GRUNDFOS DK A/S
Martin Bachs Vej 3
DK-8850 Bjerringbro
Tel.: +45-87 50 50 50
Fax: +45-87 50 51 51
E-mail: info_GDK@grundfos.com
www.grundfos.com/DK

Estonia
GRUNDFOS Pumps Eesti OÜ
Peterburi tee 92G
11415 Tallinn
Tel.: + 372 606 1690
Fax: + 372 606 1691

Finland
OY GRUNDFOS Pumput AB
Trukkikuja 1
FI-01360 Vantaa
Tel.: +358-(0) 207 889 500

France
Pompes GRUNDFOS Distribution S.A.
Parc d'Activités de Chesnes
57, rue de Malacombe
F-38290 St. Quentin Fallavier (Lyon)
Tel.: +33-4 74 82 15 15
Fax: +33-4 74 94 10 51

Germany
GRUNDFOS GMBH
Schlüterstr. 33
40699 Erkrath
Tel.: +49-(0) 211 929 69-0
Fax: +49-(0) 211 929 69-3799
E-mail: infoservice@grundfos.de
Service in Deutschland:
kundendienst@grundfos.de

Greece
GRUNDFOS Hellas A.E.B.E.
20th km. Athinon-Markopoulou Av.
P.O. Box 71
GR-19002 Peania
Tel.: +0030-210-66 83 400
Fax: +0030-210-66 46 273

Hong Kong
GRUNDFOS Pumps (Hong Kong) Ltd.
Unit 1, Ground floor, Siu Wai industrial
Centre
29-33 Wing Hong Street & 68 King Lam
Street, Cheung Sha Wan
Kowloon
Tel.: +852-27861706 / 27861741
Fax: +852-27858664

Hungary
GRUNDFOS South East Europe Kft.
Tópark u. 8
H-2045 Törökbálint
Tel.: +36-23 511 110
Fax: +36-23 511 111

India
GRUNDFOS Pumps India Private
Limited
118 Old Mahabalipuram Road
Thoraipakkam
Chennai 600 097
Tel.: +91-44 2496 6800

Indonesia
PT GRUNDFOS Pompa
Graha intirub Lt. 2 & 3
Jln. Cililitan Besar No.454. Makasar,
Jakarta Timur
ID-Jakarta 13650
Tel.: +62 21-469-51900
Fax: +62 21-460 6910 / 460 6901

Ireland
GRUNDFOS (Ireland) Ltd.
Unit A, Merrywell Business Park
Ballymount Road Lower
Dublin 12
Tel.: +353-1-4089 800
Fax: +353-1-4089 830

Italy
GRUNDFOS Pompe Italia S.r.l.
Via Gran Sasso 4
I-20060 Truccazzano (Milano)
Tel.: +39-02-95838112
Fax: +39-02-95309290 / 95838461

Japan
GRUNDFOS Pumps K.K.
1-2-3, Shin-Miyakoda, Kita-ku
Hamamatsu
431-2103 Japan
Tel.: +81 53 428 4760
Fax: +81 53 428 5005

Kazakhstan
Grundfos Kazakhstan LLP
7' Kyz-Zhibek Str., Kok-Tobe micr.
KZ-050020 Almaty Kazakhstan
Tel.: +7 (727) 227-98-55/56

Korea
GRUNDFOS Pumps Korea Ltd.
6th Floor, Aju Building 679-5
Yeoksam-dong, Kangnam-ku, 135-916
Seoul, Korea
Tel.: +82-2-5317 600
Fax: +82-2-5633 725

Latvia
SIA GRUNDFOS Pumps Latvia
Deglava biznesa centrs
Augusta Deglava ielā 60
LV-1035, Rīga,
Tel.: + 371 714 9640, 7 149 641
Fax: + 371 914 9646

Lithuania
GRUNDFOS Pumps UAB
Smolensko g. 6
LT-03201 Vilnius
Tel.: + 370 52 395 430
Fax: + 370 52 395 431

Malaysia
GRUNDFOS Pumps Sdn. Bhd.
7 Jalan Peguam U1/25
Glenmarie industrial Park
40150 Shah Alam, Selangor
Tel.: +60-3-5569 2922
Fax: +60-3-5569 2866

Mexico
Bombas GRUNDFOS de México
S.A. de C.V.
Boulevard TLC No. 15
Parque industrial Stiva Aeropuerto
Apodaca, N.L. 66600
Tel.: +52-81-8144 4000
Fax: +52-81-8144 4010

Netherlands
GRUNDFOS Netherlands
Veluwezoom 35
1326 AE Almere
Postbus 22015
1302 CA ALMERE
Tel.: +31-88-478 6336
Fax: +31-88-478 6332
E-mail: info_gnl@grundfos.com

New Zealand
GRUNDFOS Pumps NZ Ltd.
17 Beatrice Tinsley Crescent
North Harbour Industrial Estate
Albany, Auckland
Tel.: +64-9-415 3240
Fax: +64-9-415 3250

Norway
GRUNDFOS Pumper A/S
Strømsveien 344
Postboks 235, Leirdal
N-1011 Oslo
Tel.: +47-22 90 47 00
Fax: +47-22 32 21 50

Poland
GRUNDFOS Pompy Sp. z o.o.
ul. Klonowa 23
Baranowo k. Poznania
PL-62-081 Przeźmierowo
Tel.: (+48-61) 650 13 00
Fax: (+48-61) 650 13 50

Portugal
Bombas GRUNDFOS Portugal, S.A.
Rua Calvet de Magalhães, 241
Apartado 1079
P-2770-153 Paço de Arcos
Tel.: +351-21-440 76 00
Fax: +351-21-440 76 90

Romania
GRUNDFOS Pompe România SRL
S-PARK BUSINESS CENTER, Clădirea A2, etaj 2
Str. Tipografilor, Nr. 11-15, Sector 1, Cod 013714
Bucuresti, Romania
Tel.: 004 021 2004 100
E-mail: romania@grundfos.ro

Serbia
Grundfos Srbija d.o.o.
Omladinskih brigada 90b
11070 Novi Beograd
Tel.: +381 11 2258 740
Fax: +381 11 2281 769
www.rs.grundfos.com

Singapore
GRUNDFOS (Singapore) Pte. Ltd.
25 Jalan Tukang
Singapore 619264
Tel.: +65-6681 9688
Faxax: +65-6681 9689

Slovakia
GRUNDFOS s.r.o.
Prievozská 4D 821 09 BRATISLAVA
Tel.: +421 2 5020 1426
sk.grundfos.com

Slovenia
GRUNDFOS LJUBLJANA, d.o.o.
Leskoškova 9e, 1122 Ljubljana
Tel.: +386 (0) 1 568 06 10
Fax: +386 (0)1 568 06 19
E-mail: tehnika-si@grundfos.com

South Africa
GRUNDFOS (PTY) LTD
16 Lascelles Drive, Meadowbrook Estate
1609 Germiston, Johannesburg
Tel.: (+27) 10 248 6000
Fax: (+27) 10 248 6002
E-mail: lgradidge@grundfos.com

Spain
Bombas GRUNDFOS España S.A.
Camino de la Fuentecilla, s/n
E-28110 Algete (Madrid)
Tel.: +34-91-848 8800
Fax: +34-91-628 0465

Sweden
GRUNDFOS AB
Box 333 (Lunnagårdsgatan 6)
431 24 Mölndal
Tel.: +46 31 332 23 000
Fax: +46 31 331 94 60

Switzerland
GRUNDFOS Pumpen AG
Bruggacherstrasse 10
CH-8117 Fällanden/ZH
Tel.: +41-44-806 8111
Fax: +41-44-806 8115

Taiwan
GRUNDFOS Pumps (Taiwan) Ltd.
7 Floor, 219 Min-Chuan Road
Taichung, Taiwan, R.O.C.
Tel.: +886-4-2305 0868
Fax: +886-4-2305 0878

Thailand
GRUNDFOS (Thailand) Ltd.
92 Chaloem Phrakiat Rama 9 Road
Dokmai, Pravej, Bangkok 10250
Tel.: +66-2-725 8999
Fax: +66-2-725 8998

Turkey
GRUNDFOS POMPA San. ve Tic. Ltd. Sti.
Gebze Organize Sanayi Bölgesi
Ihsan dede Caddesi
2. yol 200. Sokak No. 204
41490 Gebze/ Kocaeli
Tel.: +90 - 262-679 7979
Fax: +90 - 262-679 7905
E-mail: satis@grundfos.com

Ukraine
ТОВ "ГРУНДФОС УКРАЇНА"
Бізнес Центр Європа
Столичне шосе, 103
м. Київ, 03131, Україна
Tel.: (+38 044) 237 04 00
Fax: (+38 044) 237 04 01
E-mail: ukraine@grundfos.com

United Arab Emirates
GRUNDFOS Gulf Distribution
P.O. Box 16768
Jebel Ali Free Zone, Dubai
Tel.: +971 4 8815 166
Fax: +971 4 8815 136

United Kingdom
GRUNDFOS Pumps Ltd.
Grovebury Road
Leighton Buzzard/Beds. LU7 4TL
Tel.: +44-1525-850000
Fax: +44-1525-850011

U.S.A.
Global Headquarters for WU
856 Koomey Road
Brookshire, Texas 77423 USA
Phone: +1-630-236-5500

Uzbekistan
Grundfos Tashkent, Uzbekistan
The Representative Office of Grundfos Kazakhstan in Uzbekistan
38a, Oybek street, Tashkent
Tel.: (+998) 71 150 3290 / 71 150 3291
Fax: (+998) 71 150 3292

Trademarks displayed in this material, including but not limited to Grundfos and the Grundfos logo, are registered trademarks owned by The Grundfos Group. © 2024 Grundfos Holding A/S, all rights reserved.

96526170 **08.2024**

ECM: 1402734