BMS hs, BMS xl

Service Kit Catalogue

GRUNDFOS

Table of contents

1. BMS 3
Identification 3
BMS hs system 4
BMS hs 17 pump 6
BMS hs 30 pump 8
BMS hs 46/60 pump 10
BMS xl pump 12

1. BMS

Identification

Type key

Example

BMS 32-26 hs-E-C-P-A-A

Code	Explanation
BMS	Code for pump
32	Rated flow rate [m^3/h]
26	Number of stages
hs	Code for type
E	Code for motor [1]
C	Code for materials
P	Code for rubber parts
A	Code for shaft seal
A	Code for pump version

[1] Grundfos motors

Key to codes

Code	Description
Pump	
BMS	Horizontal multistage pump
BMSX	Pump system that includes a pressure exchanger and BMS pumps.
Type	
hs	High-pressure pump with high speed
hp	Pump with high-pressure inlet
xl	Pump with large flow and high pressure
Motor [2]	
A	Grundfos MG motor
B	Innomotics asynchronous motor
C	Grundfos MGE motor
E	Permanent-magnet motor
X	No motor
Materials	
C	Pump 1.4539/904L
Rubber parts	
P	NBR
Shaft seal	
A	Silicon carbide and carbon
B	Wolframcarbide/Wolframcarbide
Pump version	
A	Basic version
B	Oversize
C	Without non-return valve
D	With non-return valve
E	With certificate
J	Pump with a different maximum speed
O	Cleaned and dried
P	Undersize motor
S	High outlet pressure
X	Special version

[2] Grundfos motors

Grundfos MG:

- It is a Grundfos asynchronous motor.

Grundfos MGE:

- Grundfos permanent-magnet motor with integrated frequency converter.

BMS hs system
50/60 Hz

Kit, coupling

Pos.	Kit No.	98546247
379	Spline coupling	1
379b	Screw	6

Kit, O-ring sets

Pos.	Kit No.	98546248
6a	O-ring	1
361a	O-ring	2
365a	O-ring	1
372a	O-ring	1

Spare, control board for VFD

Pos.	Kit No.	98546341
-	Control board	1

Spare, fan cover for motor

Pos.	Kit No.	98546338	98580531
	Frame	200	225
-	Fan cover	1	1

Spare, fan for motor

Pos.	Kit No.	98546337
	Frame	200
-	Fan	1

Spare, fan for VFD

.Pos.	Kit No.	98546343
-	Fan	1

Spare, feet

Pos.	Kit No.	98546222
345	Foot	1

Spare, housing for shaft seal

Pos.	Kit No.	98546241
374	Housing	1

Spare, housing for thrust bearing

Pos.	Kit No.	98546229
363	Housing	1

Spare, interface board for VFD

Pos.	Description/kit No	98546345
-	Interface board	1

Spare, power module complete for VFD

Description	Kit No.
100T	98546346
120T	98580534
180T	98580538
220T	98580539

Spare, rectifier module complete for VFD

Description	Kit No.
100T/120T	98580541
180T/220T	98580543

Spare, shaft seal

Pos.	Kit No.	96586850
371	Shaft seal	1

Spare, shaft with thrust bearing

Pos.	Kit No.	98546243
367	Shaft	1

Spare, stationary thrust bearing

Pos.	Kit No.	96586818
368	Thrust bearing	1
369	Support for thrust bearing	1
370a	Pin	4

Spare, thrust bearing housing complete

Pos.	Kit No.	98546229
361a	O-Ring	2
363	Housing	1
360	Thrust bearing	1
366	Axial bearing	1
367	Shaft with thrust bearing	1
368	Thrust bearing	1
369	Support for thrust bearing	1
371	Shaft seal	1
365a	O-ring	1
372a	O-ring	1
370a	Pin	4
374	Housing for shaft seal	1
374b	Screw	2

Exploded view for BMS hs

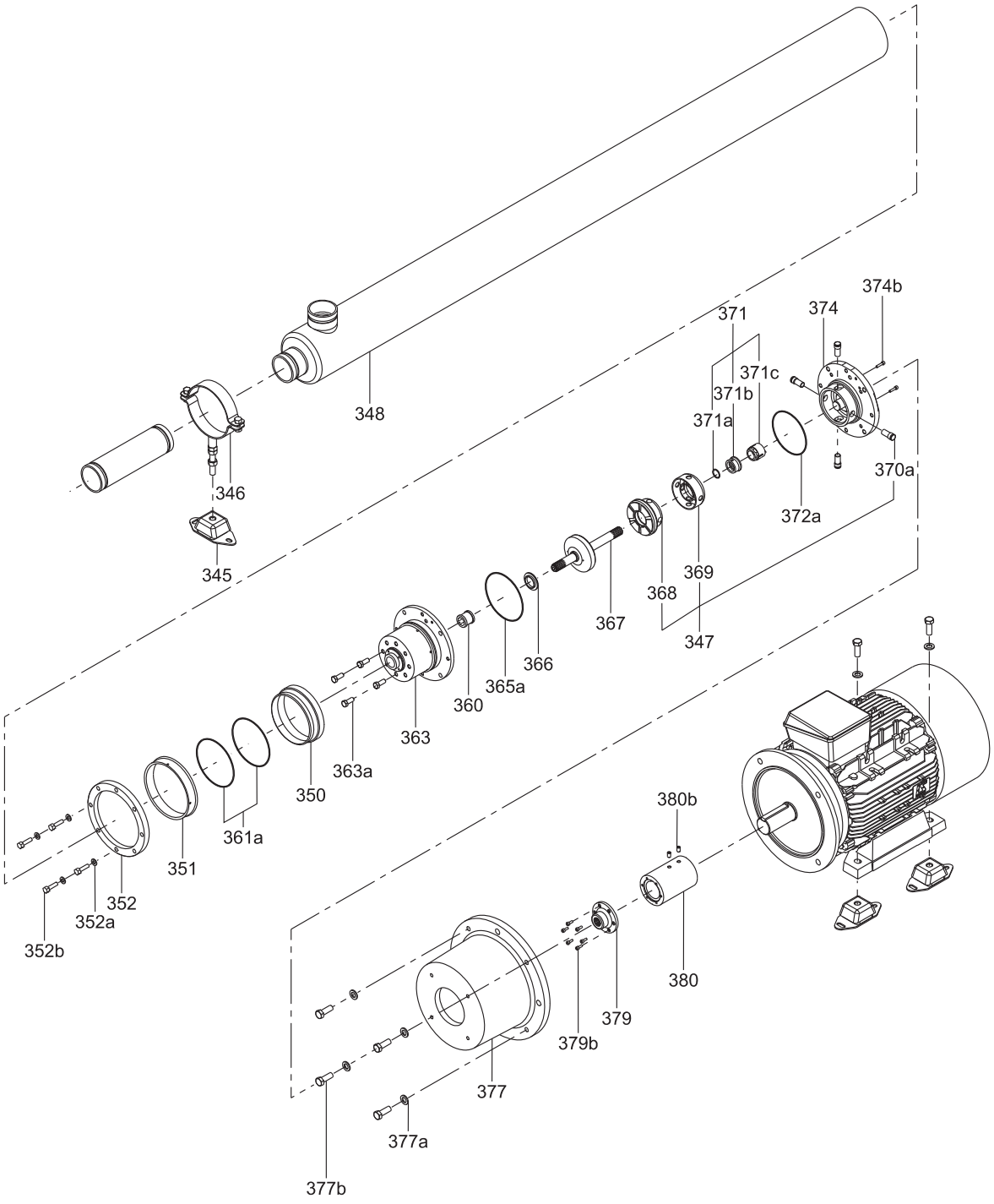

BMS hs 17 pump

Spare, chamber, intermediate

Pos.	Description/Kit No.	98098408
9	Inlet part	1

Spare, chamber, top

Pos.	Kit No.	92912183
4	Chamber, top	1

Spare/bulk, impeller set

Pos.	Kit No.	96903204	96915604
11	Inlet part	1	5
12	Split cone	1	5
13	Impeller	1	5

Spare, shaft

Pos.	Kit No.	97945231
16	Shaft	1

Spare, strap

Pos.	Kit No.	97937081
17	Strap	1

Spare, suction interconnector

Pos.	Kit No.	97937784
14	Suction interconnector	1

Spare, valve casing

Pos.	Kit No.	97937790
1	Valve casing	1

Bulk, seal ring

Pos.	Kit No.	96535344
7	Seal ring	10

Bulk, washer for stop ring

Pos.	Kit No.	96551283
8a	Washer	5

Exploded view for BMS hs 17 pump

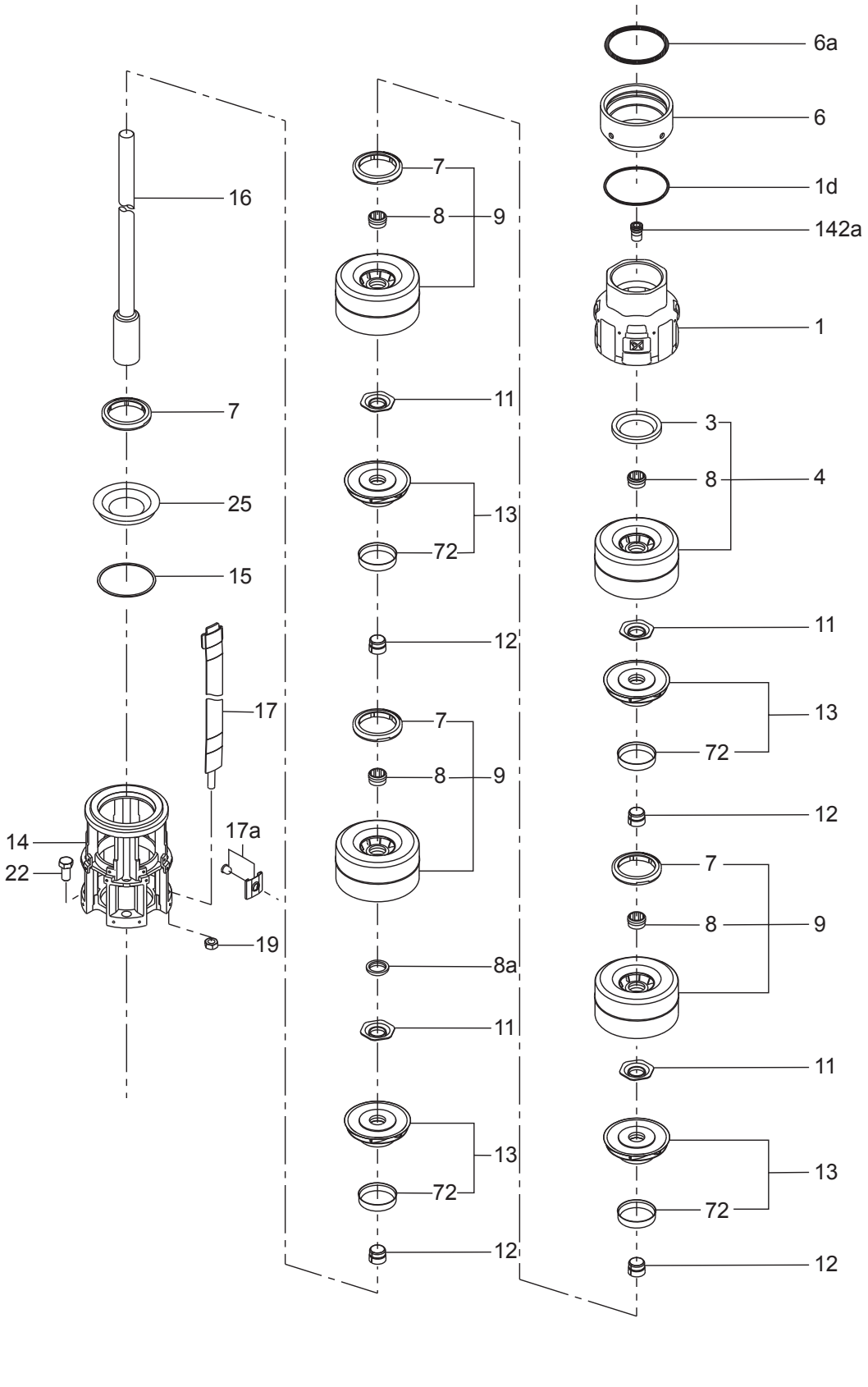

BMS hs 30 pump

Spare, chamber, intermediate

Pos.	Kit No.	98098411
9	Inlet part	1

Spare, chamber, top

Pos.	Kit No.	97937856
4	Chamber, top	1

Spare, chamber, bottom

Pos.	Kit No.	96592006
10	Chamber, bottom	1

Spare, impeller set

Pos.	Kit No.	96903206
11	Inlet part	1
12	Split cone	1
13	Impeller	1

Bulk, seal ring

Pos.	Kit No.	96537825
7	Seal ring	10

Spare, shaft

Pos.	Kit No.	97945368
16	Shaft	1

Spare, strap

Pos.	Kit No.	97937177
17	Strap	1

Spare, suction interconnector

Pos.	Kit No.	97937784
14	Suction interconnector	1

Spare, valve casing

Pos.	Kit No.	97937790
1	Valve casing	1

Bulk, retainer for seal ring

Pos.	Kit No.	96551251
25	Retainer	10

Exploded view for BMS hs 30 pump

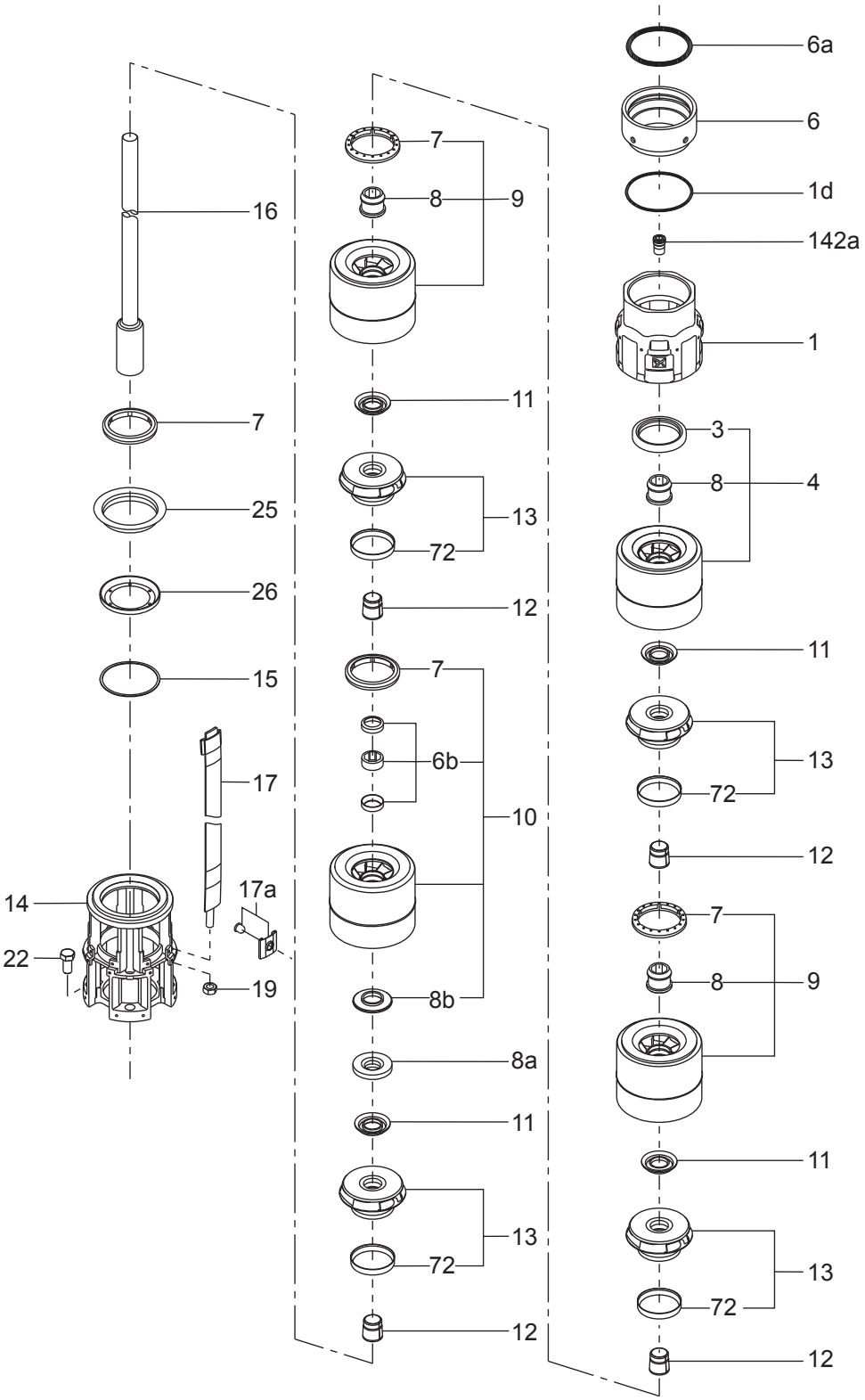

BMS hs 46/60 pump

Spare, chamber, intermediate

Pos.	Kit No.	98098411
9	Inlet part	1

Spare, chamber, top

Pos.	Model	46	60
	Description/Kit No.	98098402	98098405
4	Chamber, top	1	1

Spare, chamber, bottom

Pos.	Model	46	60
	Kit No.	98098424	98098430
10	Chamber, bottom	1	1

Spare/bulk, impeller set

Pos.	Model	46		60	
	Kit No.	96903208	96915608	96903216	96903217
	Description				
11	Inlet part	1	5	1	5
12	Split cone	1	5	1	5
13	Impeller	1	5	1	5

Spare, impeller set down

Pos.	Kit No.	97657587	97657772
11c	Inlet part	1	1
12	Split cone	1	1
13	Impeller	1	1

Spare, seal ring, bottom

Pos.	Kit No.	96551252
68	Seal ring	1

Spare, shaft

Pos.	Kit No.	97945483
16	Shaft	1

Spare, strap

Pos.	Kit No.	97937240
17	Strap	1

Spare, suction interconnector

Pos.	Kit No.	97937784
14	Suction interconnector	1

Spare, valve casing

Pos.	Kit No.	97937790
1	Valve casing	1

Spare, washer for stop ring

Pos.	Kit No.	96590773
8a	Washer	1

Exploded view for BMS hs 46/60 pump

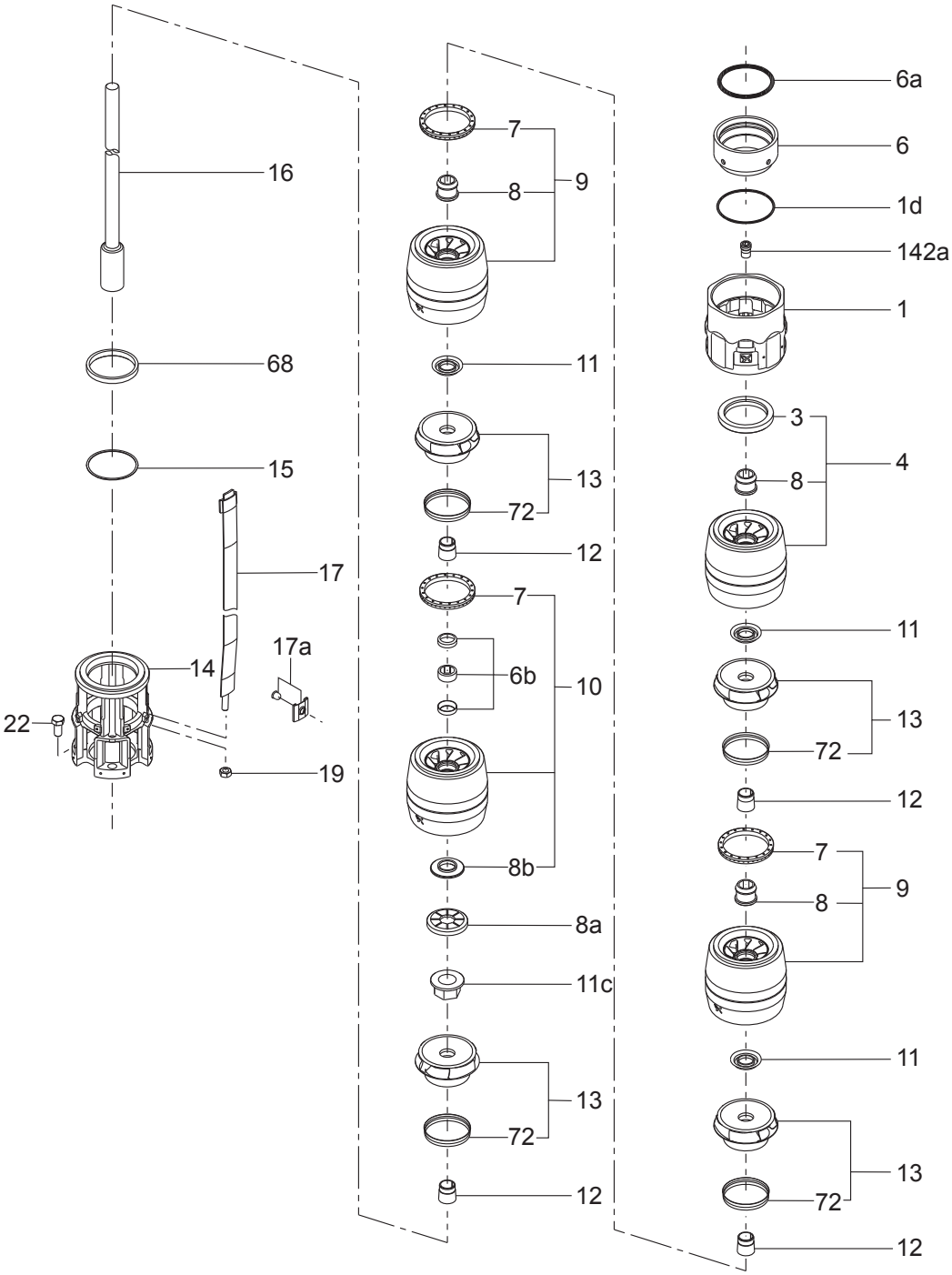

BMS xl pump

Kit, coupling

Pos.	Kit No.	98546247
379	Coupling	1
379a	Hexagon socket head cap screw	6

Kit, O-ring

Pos.	Pump type	125, 160	215
	Kit No.	93363541	93363540
361a	O-ring	2	2
365a	O-ring	1	1
372a	O-ring	1	1
355a	O-ring	1	1
355b	O-ring	1	1
-	O-ring	1	1

Kit, pump mounting

Pos.	Pump type	125-9, 125-12, 215-5	125, 160, 215	215-11
	Motor power [kW]	160-200	250-315	355
	Kit No.	93363536	93363535	93363534
346	Support cpl.	1	1	1
345	Damper	2	2	2

Kit, thrust bearing stationary

Pos.	Kit No.	93363537
347	Thrust bearing cpl. stationary	1
368	Thrust bearing	1
369	Support for thrust bearing	1
370a	Pin	4

Kit, Thrust bearing cpl.

Pos.	Kit No.	93363538
347	Thrust bearing cpl. Stationary	1
370a	Pin	4
369	Support for thrust bearing	1
366	Bearing Axial	1
360	Intermediate bearing	1
361a	O-ring 260 x 3	2
365a	O-ring 174.5 x 3	1
372a	O-ring 160 x 3	1

Spare, Centering cpl.

Pos.	Kit No.	93363533
400	Centering cpl.	1

Spare, motor

Pos.	Pump type	125-9, 215-5	125-12, 215-5	125-15, 160-10, 160-12, 215-7	215-9	215-11
	Motor power [kW]	160	200	250	315	355
	Kit No.	93398886	93398882	93398866	93397597	93397499
310	Motor	1	1	1	1	1

Spare, pump

Pos.	Pump type	125-9	125-12	125-15	160-10	160-12	215-5	215-7	215-9	215-11
	Kit No.	93508184	93508183	93508180	93508157	93507952	93507917	93507906	93507884	93507504
301	Pump	1	1	1	1	1	1	1	1	1

Spare, shaft seal

Pos.	Kit No.	93363545
371	Shaft seal, HQBE	1

Spare, shaft with thrust bearing

Pos.	Kit No.	93363539
367	Shaft with thrust bearing	1

Bulk, motor feet

Pos.	Kit No.	93363555
345	Feet	4

Bulk, pump feet

Pos.	Kit No.	93363556
345	Feet	2

Bulk, hex head bolt

Pos.	Kit No.	93400570
363a	Hex head bolt, M16x40	4

Exploded view for BMS xl pump

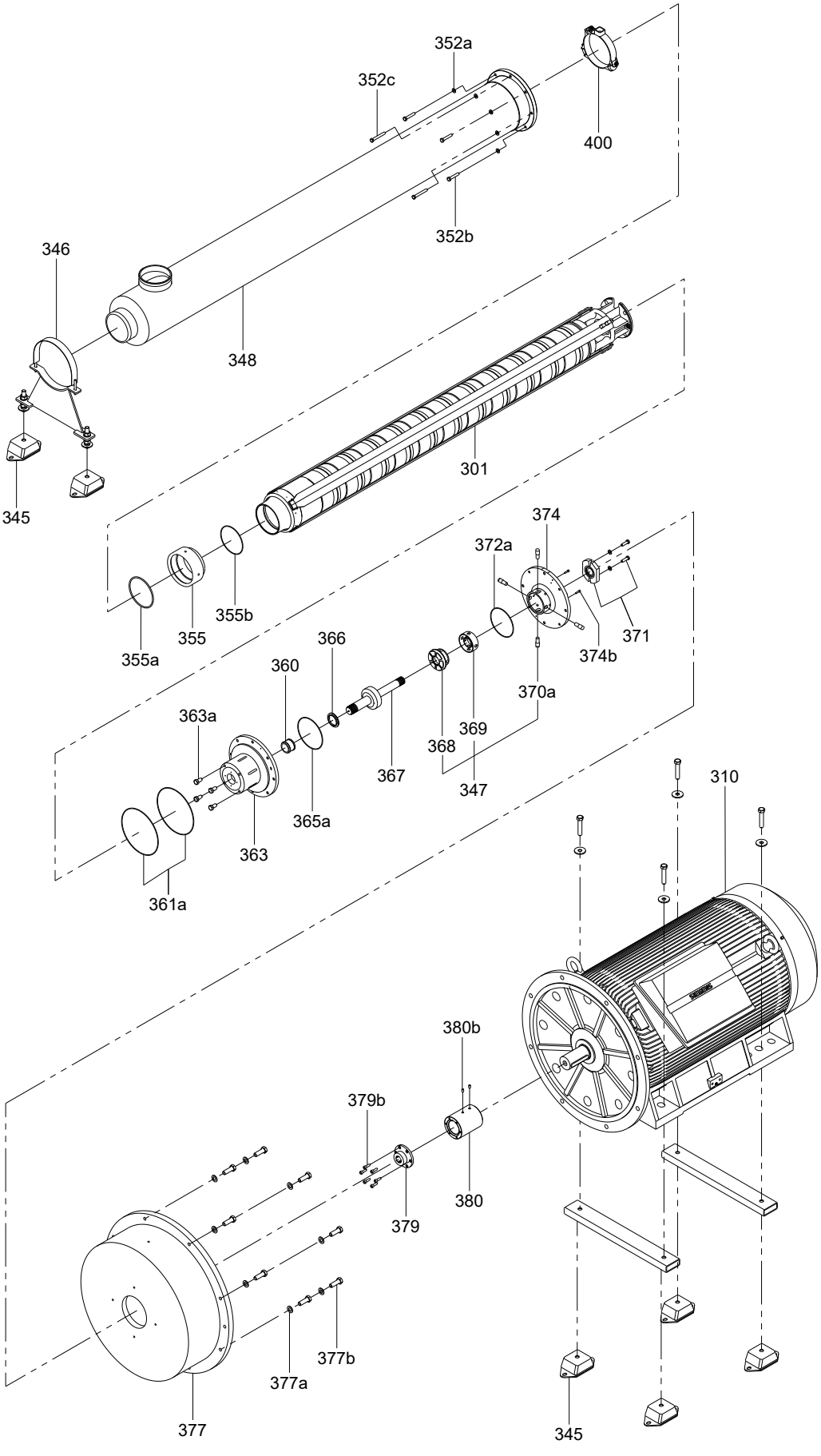

Trademarks displayed in this material, including but not limited to Grundfos and the Grundfos logo, are registered trademarks owned by The Grundfos Group. © 2025 Grundfos Holding A/S, all rights reserved.

93537868 **11. 2025**
ECM: 1437218

GRUNDFOS Holding A/S
Poul Due Jensens Vej 7
DK-8850 Bjerringbro
Tel: +45 87 50 14 00
www.grundfos.com

GRUNDFOS