KSN pumps 75-800 kW

50/60 Hz, DIN

Safety instructions and other important information

GRUNDFOS

KSN pumps 75-800 kW

English (GB)

Safety instructions. 4
Declaration of conformity 17
Declaration of conformity 24
Declaration of conformity 25

English (GB) Safety instructions

Original safety instructions

These safety instructions give a quick overview of the safety precautions to be taken in connection with any work on this product. Observe these safety instructions during handling, installation, operation, maintenance, service and repair of this product. These safety instructions are a supplementary document, and all safety instructions will appear again in the relevant sections of the installation and operating instructions. Keep these safety instructions at the installation site for future reference.

General information

Read this document before you install the product. Installation and operation must comply with local regulations and accepted codes of good practice.

Hazard statements

The symbols and hazard statements below may appear in Grundfos installation and operating instructions, safety instructions and service instructions.

DANGER
Indicates a hazardous situation which, if not avoided, will result in death or serious personal injury.

WARNING
Indicates a hazardous situation which, if not avoided, could result in death or serious personal injury.

CAUTION
Indicates a hazardous situation which, if not avoided, could result in minor or moderate personal injury.

The hazard statements are structured in the following way:

SIGNAL WORD
Description of the hazard
Consequence of ignoring the warning
- Action to avoid the hazard.

Notes

The symbols and notes below may appear in Grundfos installation and operating instructions, safety instructions and service instructions.

Observe these instructions for explosion-proof products.

A blue or grey circle with a white graphical symbol indicates that an action must be taken.

A red or grey circle with a diagonal bar, possibly with a black graphical symbol, indicates that an action must not be taken or must be stopped.

If these instructions are not observed, it may result in malfunction or damage to the equipment.

Tips and advice that make the work easier.

Target group

These installation and operating instructions are intended for professional installers.

Product description

This booklet describes instructions for the installation, operation and maintenance of Grundfos KSN pumps, 75 - 800 kW.

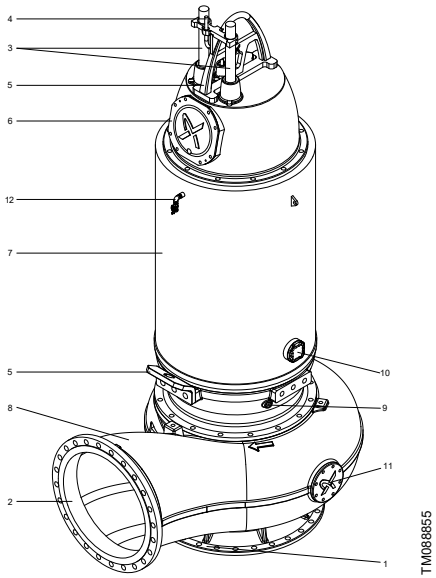

KSN pump

Position	Description
1	Inlet
2	Outlet
3	Power supply cable
4	Control cable
5	Lifting bracket
6	Inspection cover
7	Submersible motor
8	Pump housing
9	Oil drainage hole
10	Inspection cover, motor
11	Inspection cover, pump
12	Air vent valve

The KSN pump ranges are free-flow channel impeller pumps specifically designed for pumping sewage and wastewater in a wide range of municipal and industrial applications. The pumps are made of resistant materials, such as cast iron and stainless steel. These materials ensure good durability in wastewater applications. The pumps are fitted with motors from 75 to 800 kW as standard range and with outlet sizes of DN 500 - 600 and 800. The motors are either 6, 8, 10, 12 or 14-pole motors, depending on the motor size. The free passage in the pumps is 100 to 230 mm. The pumps are available for these types of installation:

- submerged installation on auto-coupling system
- dry installation, vertical
- dry installation, horizontal
- free standing.

Max. submersion depth is 20 m when installed on auto-coupling.

Intended use

These pumps are designed for pumping sewage and wastewater in a wide range of municipal, private and industrial applications.

Pumped liquids

The KSN pumps, ranges DN500, 600 and 800 are specially designed for wastewater in a wide range of applications, such as:

- raw-water intake,
- wastewater transportation,
- sewage treatment plants,
- municipal pumping stations,
- industrial process water.

The pumps are suitable for both temporary and permanent installation.

Liquid:

- pH value: 4-10.
- liquid temperature: 0 °C to +40 °C.

When pumping liquids with a density and/or a kinematic viscosity higher than that of water, use motors with correspondingly higher outputs.

Density and viscosity of pumped liquid:

Maximum density: 1000 kg/m^3, maximum kinematic viscosity: 1 mm^2/s (1cSt).

Nameplate

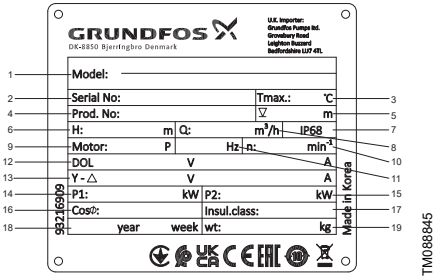

Nameplate example

Position	Description
1.	Type designation
2.	Serial number
3.	Max. ambient temperature
4.	Product number
5.	Max. installation depth
6.	Duty point flow head
7.	Enclosure class according to IEC 60529
8.	Duty point flow rate
9.	Number of poles
10.	Rated speed
11.	Frequency
12.	Voltage and current, DOL starting
13.	Voltage and current, Y-D starting
14.	Input power
15.	Shaft power
16.	Power factor
17.	Insulation class
18.	Production code (year and week)
19.	Pump weight

Type key

Example: KSN3.120.500.5000.6.H.N.5.38.S.Z

Code	Explanation	Designation
KSN	Grundfos Sewage and wastewater pump	Pump type
3	Three channel	Impeller type
4	Four channel	
120	Maximum solid size [mm]	Pump passage
500	Pump outlet nominal diameter [mm]	Pump outlet
5000	500 kW: P2 x 10	Power [kW]
6	6 poles	Number of poles
8	8 poles	
10	10 poles	
12	12 poles	
14	14 poles	
H	High	Pressure version
M	Medium	
L	Low	
N	Pump without Ex approval	Pump version
5	50Hz	Frequency [Hz]
6	60Hz	
38	380 V	Voltage [V]
41	415 V	
46	460 V	
66	660 V	
2H	3000 V	
3H	3300 V	
4H	4160 V	
6H	6000 V	
7H	6600 V	
10H	10000 V	
S	Standard sensor version	Sensor version
A	Sensor version A	
B	Sensor version B	
F	Sensor version FPV	
Z	Custom-built product	Customization

Transporting the product

WARNING
Crushing hazard
Death or serious personal injury
- Lifting and moving must be done by a trained person.

CAUTION
Sharp element
Minor or moderate personal injury
- Packaging parts may be pointy or sharp. Wear hand protection.

CAUTION
Crushing hazard
Minor or moderate personal injury
- Make sure the pump cannot roll or fall over.

WARNING
Crushing hazard
Death or serious personal injury
- Always lift the pump by its lifting bracket or use a forklift.

DANGER
Electric shock
Death or serious personal injury
- Never lift the pump by the power cable, hose, or pipe.

Leave the cable-end protectors and control cables on the power supply until making the electrical connection. Whether insulated or not, the free cable end must never be exposed to moisture.

Inspecting the product

If the pump is not in operation or is being stored for more than a month, turn the impeller once a month.

WARNING
Crushing hazard
Death or serious personal injury
- Do not turn the impeller by hand. Always use an appropriate tool.

On pumps fitted with a guide vane, be careful not to damage the guide vane when turning the impeller.

Lifting the product

Weights are stated with 10 m cables.

WARNING
Crushing of feet
Death or serious personal injury

- Always use a forklift for lifting the pump.
- Always lift the pump by its marked lifting points.

Pumps are provided with a center of gravity label to help lifting.

Weights of sewage pumps with cooling jacket for submerged installation on auto-coupling include guide shoes.

Weights of sewage pumps with cooling jacket for horizontal dry installation include horizontal base stands.

Pumps have the following weight ranges:

Pump outlet	Weight range [kg]	
	50 Hz	60 Hz
DN 500	5550-8270 kg	5550-7780 kg
DN 600	7550-12980 kg	7570-13130 kg
DN 800	8690-16900 kg	11420-16750 kg

WARNING
Crushing of feet
Death or serious personal injury

- If the pump is tilted in more than a 10° angle in any direction, it might fall over.
- During transportation or service always secure the pump with chains, or position it horizontally.

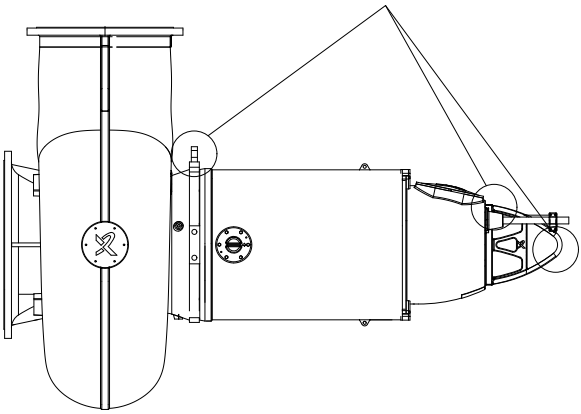

TM089036

Lifting points

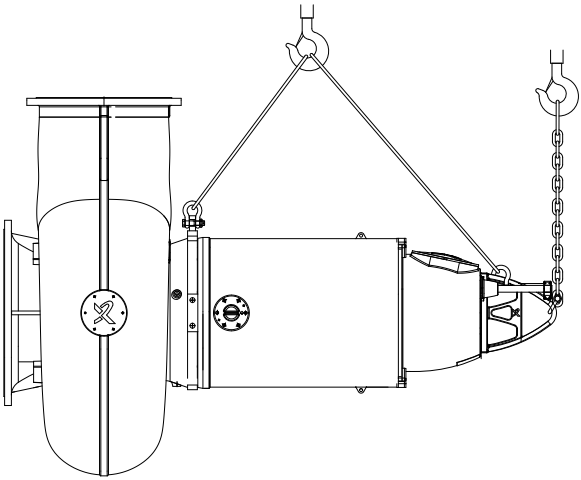

TM089037

Lifting the pump, step 1

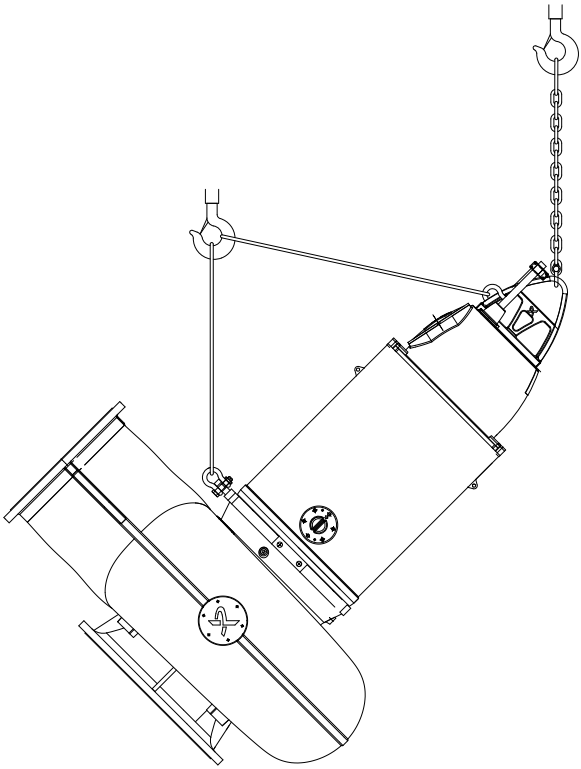

TM089038

Lifting the pump, step 2

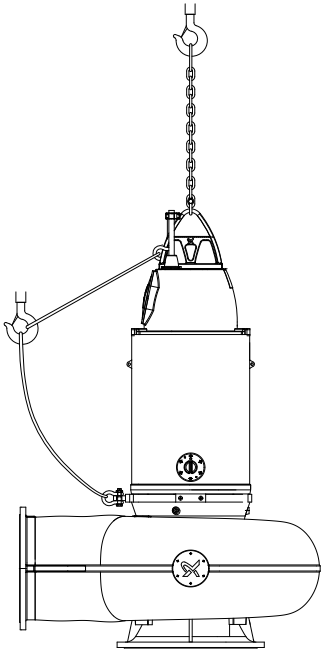

TM089040

Lifting the pump, step 3

Mechanical installation

DANGER
Electric shock
Death or serious personal injury

- Before starting any work on the product, make sure that the power supply is switched off and it cannot be switched on unintentionally.

DANGER
Crushing hazard
Death or serious personal injury

- During installation, always support the pump by lifting chains or place it in horizontal position to secure stability.

CAUTION
Crushing hazard
Minor or moderate personal injury

- Do not put your hands or any tool into the pump inlet or outlet after the pump has been connected to the power supply, unless the main switch has been locked in position 0.
- Make sure that the power supply cannot be switched on unintentionally.

The free end of the cable must not be submerged as water may penetrate into the motor.

Make sure that the pipes are installed without the use of undue force. No loads from the weight of the pipes must be carried by the pump. Use loose flanges to ease the installation and to avoid pipe tension at the flanges.

Electrical connection

DANGER
Electric shock
Death or serious personal injury

- Before starting any work on the product, make sure that the power supply is switched off and that it cannot be switched on unintentionally.

DANGER
Electric shock
Death or serious personal injury

- The pump must be grounded. Before connecting the pump to the voltage supply, make sure the connection to ground complies withthe local regulations.

Connect the pump to an external main switch ensuring all-pole disconnection with a contact separation according to EN 60204-1, 5.3.2. It must be possible to lock the main switch in position 0.

The supply voltage and frequency are marked on the nameplate. Make sure that the motor is suitable for the power supply at the installation site.

The electrical connection must comply with the local regulations.

Connect the pumps to a controller with a motor protection relay with IEC trip class 10 or 15 or NEMA-equivalent.

Before installation and the first startup of the pump, check the condition of the cable to avoid short circuits.

Switches and sensors

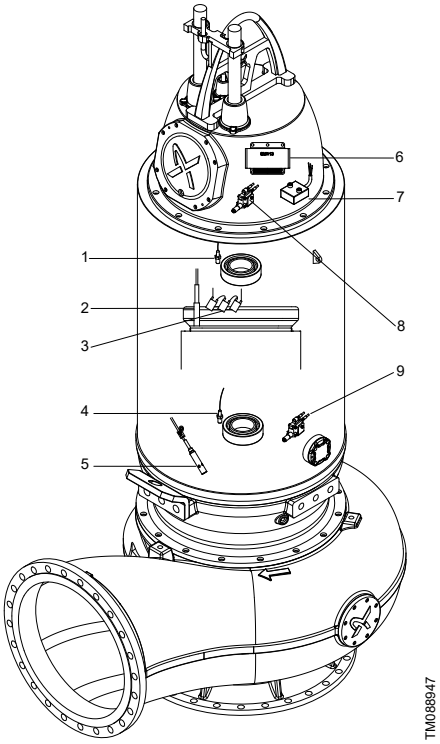

Sensor and switch layout

Position	Description
1	Bearing thermal protection (upper)
2	Stator thermal protection (Pt100)
3	Stator thermal protection (Bi-metal)
4	Bearing thermal protection (lower)
5	Water-in-oil sensor (WIO)
6	SM113 (optional)
7	Vibration sensor (PVS3, optional)
8	Terminal box moisture sensor (switch)
9	Motor housing moisture sensor (switch)

Thermal switches

Three bimetallic thermal switches are built into the stator windings. A contact opens in case of overtemperature (130 °C).

The motor-protective circuit breaker of the pump controller must include a circuit which automatically disconnects the power supply in case the protective circuit is opened.

The thermal switches are connected in series in a separate circuit in the power or control cables.

The thermal switches must be connected to the motor protection safety circuit in the control cabinet.

Technical data:

- Two conductors
- Operating voltage: 12-250 VAC
- Maximum switching current: 2.5 at cos φ = 1

Pt100

The sensor is connected in a separate circuit in the power or control cables.

Connect the sensor to a Pt100 relay in SM113 or IO113.

The sensor resistance values are the following:

- 100 Ω at 0 °C
- 138.5 Ω at 100 °C
- 107.8 Ω at 20 °C.

Do not use a megohmmeter for testing the alarm due to the low resistance of the sensor circuits.

The temperature limits are the following:

- 120 °C: warning for bearing temperature
- 130 °C: optional warning for high stator temperature, in case of PTC sensor used for monitoring

Water-in-oil (WIO) sensor

The WIO sensor measures the water content in the oil chamber and have the following signals:

- 4-20 mA: 0-20% of water in oil does not cause a reaction
- 22 mA: water content outside of the measuring range causes a warning
- 3.5 mA: low oil level causes an alarm.

The sensor is fitted in a stainless tube for mechanical protection.

The WIO sensor can be used with other pump controllers than IO113 or SM113 with 4-20 mA inputs.

Lack of oil may overheat and damage the mechanical shaft seals. The WIO sensor in the oil chamber triggers the alarm if the quality or quantity of the oil in oil chamber is inadequate.

Technical data:

- Input voltage: 12-24 VDC
- Output current: 3.4-22 mA
- Power input: 0.6 W
- Ambient temperature: 0-70 °C.

Moisture switch

Moisture switches are motor protection devices protecting the motor from damage due to moisture.

Moisture switches are non-reversing and must be replaced after they have been activated.

Pumps have two moisture switches:

- One in the terminal box
- One in the lower part of the stator housing.

The motor-protective circuit breaker of the pump controller must include a circuit which automatically disconnects the power supply in case the protective circuit of the pump is opened.

Moisture switches are connected to a separate circuit via the control cable.

Moisture switches must also be connected to the safety circuit of the separate pump controller.

Technical data:

- They have two conductors
- Operating voltage: 12-250 VAC
- Maximum switching current: 2.5 A at cos φ = 1.

Vibration sensor (PVS3)

TM077106

PVS3 vibration sensor

The PVS 3 sensor monitors the vibration level to protect the pump and the pipe network against damage.

A change in the vibration level indicates an abnormal situation. Make sure that a service inspection is carried out before the pump or the pipe network is damaged.

Measurement of insulation resistance

IO 113 measures the insulation resistance between a stator winding and ground:

- resistance above 10 MΩ = OK
- resistance between 10 MΩ and 1 MΩ = warning

- resistance below 1 MΩ = alarm.

Frequency converter operation

TM084173

In principle, all three-phase motors can be connected to a frequency converter.

However, frequency converter operation will often expose the motor insulation system to a heavier load and cause the motor to be more noisy than usual due to eddy currents caused by voltage peaks.

In addition, large motors driven via a frequency converter will be loaded by bearing currents.

For frequency converter operation, observe the following:

- The thermal protection of the motor must be connected.
- Peak voltage and dU/dt must be in accordance with the table below. The values stated are maximum values supplied to the motor terminals. The cable influence has not been taken into account. See the frequency converter data sheet regarding the actual values and the cable influence on the peak voltage and dU/dt.
- Set the frequency converter U/f ratio according to the motor data.
- Local regulations/standards must be fulfilled.
- Before installing a frequency converter, calculate the lowest allowable frequency in the installation in order to avoid zero flow.
- Do not reduce the motor speed to less than 70 % (35 Hz) of rated speed.
- Keep the flow velocity above 1 m/sec.
- Let the pump run at rated speed at least once a day in order to prevent sedimentation in the piping system.
- Do not exceed the frequency indicated on the nameplate. In this case there is risk of motor overload.
- Keep the motor cable as short as possible. The peak voltage will increase with the length of the motor cable. See data sheet for the frequency converter used.
- Use input and output filters on the frequency converter. See data sheet for the frequency converter used.
- Use screened motor cable if there is a risk that electrical noise can disturb other electrical equipment. See data sheet for the frequency converter used.

When operating the pump by a frequency converter, consider the following:

- The locked-rotor torque can be lower depending on the type of the frequency converter.
- The noise level may increase. See the installation and operating instructions for the selected frequency converter.

Maximum repetitive peak voltage [V]	Maximum dU/dt U_N 400 V [V/µ sec.]
850	2000

Frequency converter use may reduce the lifespan of the bearings and the shaft seal, depending on the operating mode and other circumstances.

For more information about the frequency converter operation, see the data sheet and the installation and operating instructions for the selected frequency converter.

Startup

DANGER
Electric shock
Death or serious personal injury
- Make sure the pump is grounded.

Pumps in dry installation must be vented.

Before the first startup and after a long standstill period, make sure that the pump is filled with the pumped liquid.

Make sure that the pump is filled with the pumped liquid.

Dry-running is not allowed.

In case of abnormal noise or vibrations, stop the pump immediately. Do not restart the pump until the cause of the fault is identified and eliminated.

Direction of rotation check

The pump may only be started for a short period without being submerged for checking the direction of rotation.

A label indicates the correct direction of rotation on the pump housing.

In case of sewage pumps with cooling jacket for submerged installation, check the direction of jerk at starting the pump. If it jerks counter-clockwise, the direction of rotation is correct.

In case of sewage pumps with cooling jacket for vertical, or horizontal dry installation, check the duty point.

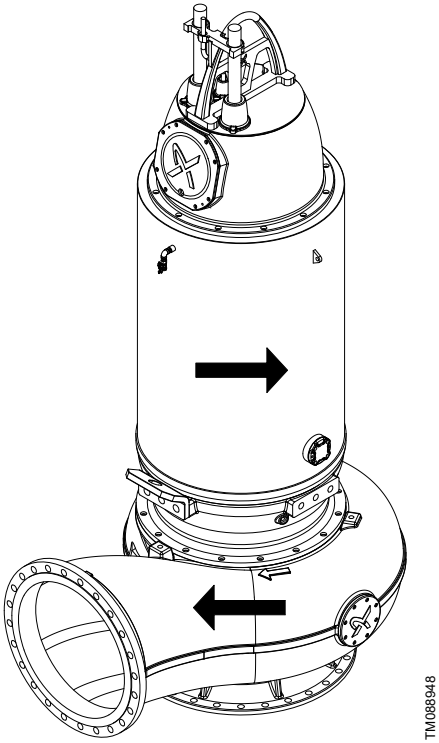

Direction of jerk and rotation

Storage

WARNING
Crushing hazard
Death or serious personal injury

- Do not turn the impeller by hand. Always use an appropriate tool.

On pumps fitted with guide vane, be careful not to damage the guide vane when turning the impeller.

Service and maintenance

WARNING
Crushing hazard
Death or serious personal injury

- Always support the pump using lifting chains or place it in horizontal position to secure stability.

DANGER
Electric shock
Death or serious personal injury
- Before starting any work on the product, make sure that the power supply is switched off and it cannot be switched on unintentionally.

DANGER
Electric shock
Death or serious personal injury
- Make sure the pump is grounded.

Maintenance and service must be carried out in an authorized service workshop by qualified persons.

Make sure to use only original service parts from the manufacturer to ensure correct dimension. The bolts used in motor must be class A2-70 according to EN/ISO 4762.

Disposal of the motor liquid must comply with local regulations.

Ball bearings

Replace the ball bearings at least every 25.000 operating hours.

Oil check and change

When the pump is new or after a shaft seal replacement, check the oil lever after a month of operation. Change the oil if it contains water.

If the pump is fitted with WIO sensor, it is not necessary to check the oil level.

CAUTION
Pressurised system
Minor or moderate personal injury
- When loosing the screw of the oil chamber, note that pressure may have built up in the chamber. Do not remove the screw until the pressure has been fully relieved.
- Cover the screw with a rag to avoid spillage.

Completely pump out the used oil making sure that the removal tube goes all the way to the bottom of the oil chamber. For complete drainage, the pump must be in horizontal position. After refilling, tighten the oil plug with 180 Nm torque in case of M16 oil plug, or 440 Nm torque in case of M22 oil plug.

Dispose of the used oil according to local regulations.

Insulation resistance check

The IO 113 measures the insulation resistance between a stator winding and earth:
- If resistance is higher than 10 MΩ: OK
- If resistance is 1-10 MΩ: warning
- If resistance is less than 1 MΩ: alarm.

Use an insulation resistance tester set to 1000 VDC. Check phase-to-phase and phase-to-earth resistance. Test result must be over 100 MΩ. Check the power cable insulation resistance according to the starting method of the pump.

Contaminated pumps

The product is classified as contaminated, if it is used for contagious or toxic liquid.

CAUTION
Biological hazard
Minor or moderate personal injury
- Flush the pump thoroughly with clean water and rinse the pump parts after dismantling.

Before returning the product for service, contact Grundfos with details about the pumped liquid. Otherwise, Grundfos can deny to service the product.

Any application for service must include details about the pumped liquid.

Clean the product in the best possible way before returning it.

Troubleshooting

DANGER
Electric shock
Death or serious personal injury
- Before starting any work on the product, make sure that the power supply is switched off and it cannot be switched on unintentionally.

DANGER
Electric shock
Death or serious personal injury
- The pump must be grounded.

Before diagnosing any fault, make sure that all rotating parts have stopped moving.

PH value

All pumps can be used for pumping liquids with a pH value of 4-10.

Density and viscosity of the pumped liquid

Density: 1000 kg/m^3.

Kinematic viscosity: 1 mm^2/s (1 cSt).

When pumping liquids with a density and/or a kinematic viscosity higher than the values stated above, use motors with correspondingly higher outputs.

Flow rate

Keep a minimum flow rate to avoid sedimentation in the pipe network. Recommended flow rates:

- in vertical pipes: 0.7 m/s.
- in horizontal pipes: 1.0 m/s.

Ambient temperature

The allowed ambient temperature is 0-40 °C.

In special situations, when the motor is not fully loaded, the ambient temperature may be higher.

In this case, contact the nearest Grundfos company or service workshop.

Liquid temperature

The allowed liquid temperature is 0-40 °C.

In special situations, when the motor is not fully loaded, the ambient temperature may be higher.

In this case, contact the nearest Grundfos company or service workshop.

Operating mode

The pumps are designed for continuous operation with maximum number of starts:

- Pumps with 75-220 kW motors: maximum 10 starts per hour
- Pumps with 220 kW motors and above: maximum 6 starts per hour
- Maximum 5.000 starts per year.

Installation depth

Maximum 20 m below liquid level.

Solid size

The maximum solid size is 100-230 mm depending on impeller type.

Enclosure class

IP68.

Sound pressure

Use hearing protection when working nearby an installation in operation with a sound pressure level above 70 dB(A).

Electrical data

Voltage tolerances for the motor and the motor protection devices:

Component	Voltage	Tolerance
Motor	See the pump nameplate	± 10 %
Thermal switches	Maximum 240 V	± 10 %
Thermistors	2.5 - 7.5 V	-
Moisture switches	Maximum 240 V	-
Other sensors (optional)	Maximum 14 VDC	± 1 V
SM 113 (optional)	Maximum 14 VDC	± 1 V

Disposing of the product

This product or parts of it must be disposed of in an environmentally sound way.

1. Use the public or private waste collection service.
2. If this is not possible, contact the nearest Grundfos company or service workshop.

The crossed-out wheelie bin symbol on a product means that it must be disposed of separately from household waste. When a product marked with this symbol reaches its end of life, take it to a collection point designated by the local waste disposal authorities. The separate collection and recycling of such products will help protect the environment and human health.

See also end-of-life information at *www.grundfos.com/product-recycling*.

Declaration of conformity

GB: EU declaration of conformity

For products with CE marking on the nameplate.

We, Grundfos, declare under our sole responsibility that products (1) declared below are in conformity with the relevant union harmonisation legislation (2), harmonised standards or other technical specifications (3).

This declaration of conformity refers to the Grundfos document: 93355268

If a product consists of several components each with a separate declaration, all relevant declarations are included in the package.

BG: Декларация за съответствие на ЕС

За продукти със CE маркировка на табелката с данни.

Ние, Grundfos, декларираме с пълната си отговорност, че декларираните по-долу продукти (1) съответстват на приложимото законодателство за хармонизиране на Съюза (2), хармонизираните стандарти или други технически спецификации (3).

Тази декларация за съответствие е във връзка с документа на Grundfos: 93355268

Ако определен продукт се състои от няколко компонента, всеки от които с отделна декларация, в пакета се включват всички приложими декларации.

CZ: EU prohlášení o shodě

Pro výrobky s označením CE na typovém štítku.

My společnost Grundfos prohlašujeme na svou plnou odpovědnost, že níže uvedené výrobky (1) jsou v souladu s příslušnými harmonizačními právními předpisy (2), harmonizačními normami nebo jinými technickými specifikacemi (3) Evropské unie.

Toto prohlášení o shodě odkazuje na dokument společnosti Grundfos: 93355268

Pokud se výrobek skládá z několika součástí, z nichž každá má samostatné prohlášení, jsou v balení zahrnuta všechna příslušná prohlášení.

DE: EU-Konformitätserklärung

Für Produkte mit CE-Kennzeichnung auf dem Typenschild.

Wir, Grundfos, erklären in alleiniger Verantwortung, dass die Produkte (1), auf die sich die folgende Erklärung bezieht, den nachstehend genannten Harmonisierungsrechtsvorschriften (2), Normen und Spezifikationen (3) der EU entspricht.

Diese Konformitätserklärung bezieht sich auf das Grundfos-Dokument: 93355268

Besteht ein Produkt aus mehreren Komponenten, die jeweils eine eigene Deklaration haben, sind alle relevanten Deklarationen im Paket enthalten.

Eine Liste der erforderlichen Komponenten, die zur Erfüllung der funkbezogenen Anforderungen notwendig sind, finden Sie im entsprechenden Grundfos-Dokument.

Benannte Stelle für die EU-Baumusterprüfung (4)

Zertifikat Nr. 5

Benannte Stelle für die Produktionskontrolle (6)

DK: EU-overensstemmelseserklæring

For produkter med CE-mærkning på typeskiltet.

Vi, Grundfos, erklærer på eget ansvar, at produkter (1) der er angivet nedenfor, er i overensstemmelse med den relevante EU-harmoniseringslovgivning (2), harmoniserede standarder eller andre tekniske specifikationer (3).

Denne overensstemmelseserklæring henviser til Grundfos-dokumentet: 93355268

Hvis et produkt består af flere komponenter, hver med en separat erklæring, medfølger alle relevante erklæringer i pakken.

En liste over de komponenter der kræves for at opfylde de radiorelaterede krav, findes i det respektive Grundfos-dokument.

Bemyndiget organ for EU-typeafprøvning (4)

Certifikatnummer (5)

Bemyndiget organ for produktionskontrol (6)

EE: ELi vastavusdeklaratsioon

Tooted, millel on CE-märgis andmesildil.

Meie, Grundfos, kinnitame oma ainuvastutusel, et allpool deklareeritud tooted (1) on kooskõlas asjakohaste liidu ühtlustamisõigusaktide (2), ühtlustatud standardite ja muude tehniliste spetsifikatsioonidega (3).

Käesolev vastavusdeklaratsioon viitab Grundfosi dokumendile: 93355268

Kui toode koosneb mitmest komponendist, millest igaühel on eraldi deklaratsioon, lisatakse pakendisse kõik asjakohased deklaratsioonid.

Raadiosidega seotud nõuete täitmiseks vajalike komponentide loetelu on saadaval vastavas Grundfosi dokumendis.

ELi tüübihindamise teavitatud asutus (4)

Sertifikaadi nr (5)

Tootmiskontrolli teavitatud asutus (6)

ES: Declaración de conformidad UE

Para productos con marcado CE en la placa de características

Grundfos declara, bajo su exclusiva responsabilidad, que los productos (1) que a continuación se detallan son conformes con la legislación (2), las normas u otras especificaciones técnicas (3) armonizadas de la Unión que correspondan.

La presente declaración de conformidad concierne al siguiente documento de Grundfos: 93355268

Si un producto consta de varios componentes, cada uno de ellos con una declaración independiente, el paquete incluirá todas las declaraciones correspondientes.

La lista de componentes necesarios para cumplir los requisitos en materia de radio está disponible en el documento de Grundfos correspondiente.

Organismo notificado para el examen UE de tipo (4)

N.º de certificado (5)

Organismo notificado para el control de producción (6)

FI: EY-vaatimustenmukaisuusvakuutus

Tuotteet, joiden tyyppikilvessä on CE-merkintä

Grundfos vakuuttaa omalla vastuullaan, että alla mainitut tuotteet (1) ovat asiaankuuluvan unionin yhdenmukaistamislainsäädännön (2), yhdenmukaistettujen standardien tai (3) muiden teknisten eritelmien mukaisia.

Tämä vaatimustenmukaisuusvakuutus viittaa seuraavaan Grundfos-asiakirjaan: 93355268

Jos tuote sisältää useita komponentteja, joista jokaiselle on erillinen vaatimustenmukaisuusvakuutus, kaikki asiaankuuluvat vakuutukset sisältyvät pakkaukseen.

Luettelo radioon liittyvien vaatimusten täyttämisen edellyttämistä komponenteista on saatavilla vastaavassa Grundfos-asiakirjassa.

EU-tyyppitarkastuksesta vastaava ilmoitettu laitos (4)

Sertifikaatin nro (5)

Tuotannon valvonnasta vastaava ilmoitettu laitos (6)

FR : Déclaration de conformité UE

Pour les produits avec marquage CE sur la plaque signalétique.

Nous, Grundfos, déclarons sous notre seule responsabilité que les produits (1) déclarés ci-dessous sont conformes à la législation d'harmonisation (2), aux normes harmonisées ou à d'autres spécifications techniques (3).

Cette déclaration de conformité fait référence au document Grundfos : 93355268

Si un produit est constitué de plusieurs composants ayant chacun une déclaration distincte, toutes les déclarations pertinentes sont incluses dans l'emballage.

La liste des composants nécessaires pour répondre aux exigences en matière de radio est disponible dans le document Grundfos correspondant.

Organisme notifié pour examen de type UE (4)

Numéro de certificat (5)

Organisme notifié pour le contrôle de la production (6)

HU: EU megfelelőségi nyilatkozat

Az adattáblán CE-jelöléssel ellátott termékek esetében.

Mi, a Grundfos, saját kizárólagos felelősségünkre kijelentjük, hogy az alább feltüntetett termékek (1) megfelelnek a vonatkozó uniós harmonizációs jogszabályoknak (2), a harmonizált szabványoknak vagy egyéb műszaki előírásoknak (3).

Ez a megfelelőségi nyilatkozat a Grundfos dokumentumra vonatkozik: 93355268

Ha egy termék több részegységből áll, amelyek mindegyikéhez külön nyilatkozat tartozik, akkor a csomag az összes vonatkozó nyilatkozatot tartalmazza.

A rádióval kapcsolatos követelmények teljesítéséhez szükséges részegységek listája a vonatkozó Grundfos-dokumentumban található.

Az EU-típusvizsgálathoz bejegyzett testület (4)

Tanúsítvány száma (5)

A gyártásellenőrzésért felelős bejegyzett testület (6)

LT: ES atitikties deklaracija

Produktams, kurių vardinėje plokštelėje yra CE ženklas.

Mes, „Grundfos“, su visa atsakomybe pareiškiame, kad toliau nurodyti produktai (1) atitinka derinamuosius Europos Sąjungos teisės aktus (2), darniuosius standartus arba kitas technines specifikacijas (3).

Ši atitikties deklaracija susijusi su „Grundfos“ dokumentu: 93355268

Jei produktas susideda iš kelių komponentų, kurių kiekvienas turi atskirą deklaraciją, pakuotėje yra visos šios deklaracijos.

Komponentų, reikalingų su radijo ryšiu susijusiems reikalavimams įvykdyti, sąrašas pateiktas atitinkamame „Grundfos“ dokumente.

ES tipo patvirtinimo paskelbtoji įstaiga (4)

Sertifikato Nr. (5)

Gamybos kontrolės paskelbtoji įstaiga (6)

LV: ES atbilstības deklarācija

Produktiem ar CE marķējumu pases datu plāksnītē.

Uzņēmums Grundfos ar pilnu atbildību paziņo, ka produkti (1), kuri deklarēti tālāk, atbilst attiecīgajiem savienības ar saskaņošanu saistītajiem tiesību aktiem (2), saskaņotajiem standartiem vai citām tehniskajām specifikācijām (3).

Šī atbilstības deklarācija attiecas uz Grundfos dokumentu: 93355268

Ja produkts sastāv no vairākiem komponentiem, no kuriem katram ir atsevišķa deklarācija, visas attiecīgās deklarācijas tiek iekļautas iepakojumā.

Nepieciešamo komponentu saraksts, lai izpildītu ar radiosakariem saistītās prasības, ir pieejams attiecīgajā Grundfos dokumentā.

Pieteiktā iestāde ES tipa pārbaudei (4)

Sertifikāta Nr. (5)

Pieteiktā iestāde ražošanas kontrolei (6)

PL: Deklaracja zgodności WE

Dla produktów z oznaczeniem CE na tabliczce znamionowej.

Firma Grundfos oświadcza z pełną odpowiedzialnością, że produkty (1), których dotyczy niniejsza deklaracja, są zgodne z odpowiednimi unijnymi przepisami harmonizacyjnymi (2), normami zharmonizowanymi lub innymi specyfikacjami technicznymi (3).

Niniejsza deklaracja zgodności odnosi się do dokumentu Grundfos: 93355268

Jeśli produkt składa się z kilku komponentów, z których każdy ma oddzielną deklarację, opakowanie zawiera wszystkie odnośne deklaracje.

Lista komponentów wymaganych do spełnienia wymagań radiowych jest dostępna w odpowiednim dokumencie Grundfos.

Jednostka notyfikowana do badań typu UE (4)

Nr certyfikatu (5)

Jednostka notyfikowana do celów kontroli produkcji (6)

PT: Declaração de conformidade UE

Para produtos com marcação CE na chapa de características.

A Grundfos declaramos sob sua única responsabilidade que os produtos (1) declarados abaixo estão em conformidade com a legislação de harmonização (2), as normas de harmonização ou outras especificações técnicas (3) relevantes da União.

Esta declaração de conformidade refere-se ao documento Grundfos: 93355268

Se um produto consistir em vários componentes, cada um com uma declaração separada, todas as declarações relevantes serão incluídas na embalagem.

A lista de componentes necessários para cumprir os requisitos relacionados com o rádio está disponível no respetivo documento da Grundfos.

Organismo notificado para o exame de tipo da UE (4)

N.º de certificado (5)

Organismo notificado para controlo de produção (6)

RO: Declarație de conformitate UE

Pentru produsele cu marcaj CE pe plăcuța de identificare.

Subscrisa, Grundfos, declară pe propria răspundere că produsele (1) menționate mai jos sunt în conformitate cu legislația relevantă de armonizare a Uniunii Europene (2), cu standardele armonizate sau cu alte specificații tehnice (3).

Această declarație de conformitate se referă la documentul Grundfos: 93355268

Dacă un produs este format din mai multe componente, fiecare cu o declarație separată, toate declarațiile relevante sunt incluse în pachet.

Lista componentelor necesare pentru îndeplinirea cerințelor privind echipamentele radio este disponibilă în documentul Grundfos corespunzător.

Organism notificat pentru examinarea UE de tip (4)

Nr. certificat (5)

Organism notificat pentru controlul producției (6)

RU: Декларация о соответствии нормам ЕС

Для изделий с маркировкой CE на заводской табличке.

Мы, компания Grundfos, с полной ответственностью заявляем, что изделия (1), к которым относится приведенная ниже декларация, соответствуют применимым гармонизированным законодательным актам (2), гармонизированным стандартам или другим техническим условиям Евросоюза (3).

Настоящая декларация соответствия относится к документу Grundfos: 93355268

Если изделие состоит из нескольких компонентов, на каждый из которых имеется отдельная декларация, то в комплект поставки включены все соответствующие декларации.

Список необходимых компонентов для выполнения требований к радиооборудованию, приводится в соответствующем документе Grundfos.

Нотифицированный орган, уполномоченный проводить оценку соответствия в ЕС (4)

Номер сертификата (5)

Нотифицированный орган, уполномоченный проводить производственный контроль (6)

SE: EU-försäkran om överensstämmelse

För produkter med CE-märkning på typskylten.

Vi, Grundfos, försäkrar under vårt eget ansvar att produkter (1) som deklareras nedan överensstämmer med gällande harmoniseringslagstiftning (2), harmoniserade standarder eller andra tekniska specifikationer (3).

Denna försäkran om överensstämmelse hänvisar till Grundfos-dokumentet: 93355268

Om en produkt består av flera komponenter, var och en med separat deklaration, ingår alla relevanta deklarationer i förpackningen.

Lista över nödvändiga komponenter för att uppfylla de radiorelaterade kraven finns i respektive Grundfos-dokument.

Anmält organ för EU-typprovning (4)

Certifikat nr (5)

Anmält organ för produktionskontroll (6)

SK: EÚ vyhlásenie o zhode

Pre výrobky s označením CE na typovom štítku.

My, spoločnosť Grundfos, vyhlasujeme na svoju plnú zodpovednosť, že nižšie uvedené výrobky (1) sú v súlade s príslušnými harmonizačnými právnymi predpismi (2), harmonizačnými normami alebo inými technickými špecifikáciami (3) Európskej únie.

Toto vyhlásenie o zhode odkazuje na dokument spoločnosti Grundfos: 93355268

Ak sa výrobok skladá z niekoľkých komponentov, z ktorých každý má samostatné vyhlásenie, sú v balení zahrnuté všetky príslušné vyhlásenia.

Zoznam požadovaných súčastí na splnenie požiadaviek súvisiacich s rádiovým signálom je k dispozícii v príslušnom dokumente spoločnosti Grundfos.

Úradne určený orgán pre EÚ typové schválenie (4)

Osvedčenie č. (5)

Úradne určený orgán kontroly výroby (6)

TR: AB uygunluk beyanı

Etiketinde CE işareti bulunan ürünler için.

Grundfos olarak, aşağıdaki beyan edilen ürünlerin (1) ilgili birlik uyum mevzuatı (2), uyumlaştırılmış standartlar veya diğer teknik özellikler (3) ile uyumlu olduğunu tüm sorumluluk bize ait olmak üzere beyan ederiz.

Bu uygunluk beyanı, Grundfos dokümanıyla ilgilidir: 93355268

Bir ürün her biri ayrı bir beyana sahip birkaç parçadan oluşuyorsa tüm ilgili beyanlar pakete dahil edilir.

Telsizle ilgili gereksinimlerin karşılanması için gerekli bileşenlerin listesi ilgili Grundfos belgesinde mevcuttur.

AB Tipi inceleme için onay kuruluşu (4)

Sertifika No. (5)

Üretim kontrolü için onaylı kuruluş (6)

UA: Декларація відповідності EU

Для виробів з маркуванням CE на заводській табличці.

Ми, компанія Grundfos, під нашу виключну відповідальність заявляємо, що виріб (1), до якого відноситься нижченаведена декларація, відповідає вимогам дійсного гармонізованого законодавства Союзу (2), гармонізованим стандартам і будь-яким технічним умовам (3).

Ця декларація відповідності відноситься до документа компанії Grundfos: 93355268

Якщо виріб складається з кількох компонентів, кожен з яких має окрему декларацію, усі відповідні декларації включені в пакування.

Список необхідних компонентів для виконання вимог до радіообладнання доступний у відповідному документі компанії Grundfos.

Уповноважений орган для перевірки типу ЄС (4)

Номер сертифіката (5)

Уповноважений орган контролю виробництва (6)

CN:欧盟符合性声明

对于铭牌上带有 CE 标识的产品。

格兰富公司郑重宣布，以下声明的产品 (1) 符合欧盟统一的立法 (2)、协调标准或其他技术规格 (3)。

本符合性声明是指格兰富文档： 93355268

如果产品由多个部件构成，且每个部件带有单独的声明，则包装包含所有相关声明。

相应格兰富文件列出了满足无线电相关要求所需的部件。

欧盟型检验公告机构 (4)

证书号 (5)

生产控制公告机构 (6)

NO: Samsvarserklæring for EU

For produkter med CE-merking på typeskiltet.

Vi, Grundfos, erklærer under vårt eneansvar at produkter (1) erklært nedenfor er i samsvar med er i samsvar med EUs relevante harmoniseringslovgivning (2), harmoniserte standarder eller andre tekniske spesifikasjoner (3).

Denne samsvarserklæringen viser til følgende Grundfos-dokument: 93355268

Hvis et produkt består av flere komponenter som alle har separate erklæringer, følger alle relevante erklæringer med i pakken.

Liste over nødvendige komponenter for å oppfylle de radiorelaterte kravene er tilgjengelig i det aktuelle Grundfos-dokumentet.

Teknisk kontrollorgan for undersøkelse av EU-type (4)

Sertifikatnummer (5)

Teknisk kontrollorgan for produksjonskontroll (6)

AR: إقرار مطابقة الاتحاد الأوروبي (EU)

على لوحة الاسم CE للمنتجات التي تحمل علامة.

نقر نحن، جروندفوس، بمقتضى مسؤوليتنا الفردية بأن المنتجات (1) المعلنة أدناه تتوافق مع تشريعات التنسيق النقابي ذات الصلة (2)، أو المعايير المنسقة أو المواصفات الفنية الأخرى (3).

يشير إقران المطابقة هذا إلى وثيقة جراندفوس: 93355268

إذا كان المنتج يتكون من عدة مكونات لكل منها إقرار منفصل، فسيتم تضمين جميع الإقرارات ذات الصلة في العبوة.

تتوفر قائمة المكونات المطلوبة للوفاء بالمتطلبات المتعلقة بالراديو في وثيقة جروندفوس المعنية.

الجهة المعتمدة للفحص من نوع الاتحاد الأوروبي (4)

شهادة رقم (5)

الجهة المعتمدة لمراقبة الإنتاج (6)

IS: ESB-samræmisyfirlýsing

Fyrir vörur með CE-merki á merkiplötunni.

Við, Grundfos, lýsum því yfir á okkar eigin ábyrgð að vörur (1) sem tilgreindar eru hér á eftir samræmast þar að lútandi samhæfingarlöggjöf Sambandsins (2), samhæfðum stöðlum eða öðrum tækniforskriftum (3).

Í þessari samræmisyfirlýsingu er vísað til Grundfos-skjalsins: 93355268

Ef vara samanstendur af nokkrum íhlutum sem hver hefur sína yfirlýsingu fylgja allar viðeigandi yfirlýsingar með í umbúðunum.

Skrá yfir íhluti sem þarf til að uppfylla kröfur sem tengjast þráðlausum fjarskiptabúnaði er að finna í viðeigandi Grundfos-skjali.

Tilkynntur aðili fyrir ESB-gerðarprófun (4)

Vottorð nr. 5.

Tilkynntur aðili fyrir framleiðslustýringu (6)

KSN

Union harmonisation legislation (2)

Harmonised standards or other technical specifications (3)

- Standards used:
  2006/42/EC (Machinery Directive)
  2014/30/EU (EMC Directive)
  2011/65/EU and 2015/863/EU (RoHS Directives)
  EN IEC 63000:2018.

Székesfehérvár, 28/02/2025

Zoltán Lajtos
MUNI Solutions Value Stream Director

Grundfos Holding A/S
Poul Due Jensens Vej 7
8850 Bjerringbro, Denmark
www.grundfos.com

10000745695

Declaration of conformity

UK declaration of conformity

We, Grundfos, declare under our sole responsibility that the products to which the declaration below relates, are in conformity with UK regulations, standards and specifications to which conformity is declared, as listed below:

Valid for Grundfos products:

KSN

- **Supply of Machinery (Safety) Regulations 2008**
  Standards used: EN 809:1998 + A1:2009
- **Electromagnetic Compatibility Regulations 2016**
  Standards used: EN 61326-1:2013
- **The Restriction of the Use of Certain Hazardous Substances in Electrical and Electronic Equipment Regulations 2019**
  Standards used: EN IEC 63000:2018

This Declaration of Conformity is valid together with Grundfos publication number 93355268.

Székesfehérvár, 14th March, 2025

Zoltán Lajtos
MUNI Solutions Value Stream Director
Grundfos Holding A/S
Poul Due Jensens Vej 7
8850 Bjerringbro, Denmark
www.grundfos.com
Manufacturer and person empowered to sign the UK declaration of conformity.
10000751765

Declaration of conformity

GB: Moroccan declaration of conformity

We, Grundfos, declare under our sole responsibility that the products to which the declaration below relates, are in conformity with Moroccan laws, orders, standards and specifications to which conformity is declared, as listed below:

Valid for Grundfos products:

KSN

Law No 24-09, 2011 Safety of products and services and the following orders:

Order No 2573-14, 2015 Safety Requirements for Low Voltage Electrical Equipment

Standards used: NM EN 809+A1:2015

Order No 2574-14, 2015 Electromagnetic Compatibility

Standards used: NM EN 61326-1:2016

This Moroccan declaration of conformity is only valid when accompanying Grundfos instructions.

FR : Déclaration de conformité marocaine

Nous, Grundfos, déclarons sous notre seule responsabilité que les produits auxquels se réfère la déclaration ci-après sont conformes aux lois, arrêtés, normes et spécifications marocains pour lesquels la conformité est déclarée, tels qu'énumérés ci-dessous :

Valable pour les produits Grundfos :

KSN

Loi n° 24-09 de 2011 relative à la sécurité des produits et des services et les arrêtés suivants :

Arrêté n° 2573-14 de 2015 relatif au matériel électrique destiné à être utilisé dans certaines limites de tension

Normes utilisées : NM EN 809+A1:2015

Arrêté n° 2574-14 de 2015 relatif à la compatibilité électromagnétique des équipements

Normes utilisées : NM EN 61326-1:2016

Cette déclaration de conformité marocaine est uniquement valide lorsqu'elle accompagne les notices Grundfos.

بريطانيا العظمى: إقرار المطابقة المغربي

نقر نحن، جروندفوس، بمقتضى مسؤوليتنا وحدنا بأن المنتجات التي يتعلق بها الإقرار أدناه، تتوافق مع القوانين والقرارات والمعايير والمواصفات المغربية التي تم إقرار المطابقة بشأنها، كما هو موضح أدناه:

سارٍ على منتجات جروندفوس:

KSN

قانون رقم 24-09، 2011 بشأن سلامة المنتجات والخدمات والقرارات التالية:

القرار رقم 2573-14، 2015 بشأن متطلبات السلامة للمعدات الكهربائية ذات الجهد المنخفض

المعايير المستخدمة: NM EN 809+A1:2015

القرار رقم 2574-14، 2015 بشأن التوافق الكهرومغناطيسي

المعايير المستخدمة: NM EN 61326-1:2016

يكون إقرار المطابقة المغربي هذا صالحًا فقط عند إرفاق تعليمات جروندفوس.

Grundfos Holding A/S
Poul Due Jensens Vej 7
8850 Bjerringbro, Denmark
www.grundfos.com

GB: Manufacturer and person empowered to sign the Moroccan declaration of conformity.

FR : Fabricant et personne habilitée à signer la Déclaration de conformité marocaine.

بريطانيا العظمى: الجهة المصنعة والشخص المفوض بتوقيع إقرار المطابقة المغربي.

10000751651

Argentina
Bombas GRUNDFOS de Argentina S.A.
Ruta Panamericana km. 37.500industin
1619 - Garín Pcia. de B.A.
Tel.: +54-3327 414 444
Fax: +54-3327 45 3190

Australia
GRUNDFOS Pumps Pty. Ltd.
P.O. Box 2040
Regency Park
South Australia 5942
Tel.: +61-8-8461-4611
Fax: +61-8-8340-0155

Austria
GRUNDFOS Pumpen Vertrieb
Ges.m.b.H.
Grundfosstraße 2
A-5082 Grödig/Salzburg
Tel.: +43-6246-883-0
Fax: +43-6246-883-30

Belgium
N.V. GRUNDFOS Bellux S.A.
Boomsesteenweg 81-83
B-2630 Aartselaar
Tel.: +32-3-870 7300
Fax: +32-3-870 7301

Bosnia and Herzegovina
GRUNDFOS Sarajevo
Zmaja od Bosne 7-7A
BiH-71000 Sarajevo
Tel.: +387 33 592 480
Fax: +387 33 590 465
www.ba.grundfos.com
E-mail: grundfos@bih.net.ba

Brazil
BOMBAS GRUNDFOS DO BRASIL
Av. Humberto de Alencar Castelo
Branco, 630
CEP 09850 - 300
São Bernardo do Campo - SP
Tel.: +55-11 4393 5533
Fax: +55-11 4343 5015

Bulgaria
Grundfos Bulgaria EOOD
Slatina District
Iztochna Tangenta street no. 100
BG - 1592 Sofia
Tel.: +359 2 49 22 200
Fax: +359 2 49 22 201
E-mail: bulgaria@grundfos.bg

Canada
GRUNDFOS Canada inc.
2941 Brighton Road
Oakville, Ontario
L6H 6C9
Tel.: +1-905 829 9533
Fax: +1-905 829 9512

China
GRUNDFOS Pumps (Shanghai) Co. Ltd.
10F The Hub, No. 33 Suhong Road
Minhang District
Shanghai 201106 PRC
Tel.: +86 21 612 252 22
Fax: +86 21 612 253 33

Colombia
GRUNDFOS Colombia S.A.S.
Km 1.5 vía Siberia-Cota Conj. Potrero
Chico,
Parque Empresarial Arcos de Cota Bod.
1A.
Cota, Cundinamarca
Tel.: +57(1)-2913444
Fax: +57(1)-8764586

Croatia
GRUNDFOS CROATIA d.o.o.
Buzinski prilaz 38, Buzin
HR-10010 Zagreb
Tel.: +385 1 6595 400
Fax: +385 1 6595 499
www.hr.grundfos.com

Czech Republic
GRUNDFOS Sales Czechia and Slovakia
s.r.o.
Čajkovského 21
779 00 Olomouc
Tel.: +420-585-716 111

Denmark
GRUNDFOS DK A/S
Martin Bachs Vej 3
DK-8850 Bjerringbro
Tel.: +45-87 50 50 50
Fax: +45-87 50 51 51
E-mail: info_GDK@grundfos.com
www.grundfos.com/DK

Estonia
GRUNDFOS Pumps Eesti OÜ
Peterburi tee 92G
11415 Tallinn
Tel.: + 372 606 1690
Fax: + 372 606 1691

Finland
OY GRUNDFOS Pumput AB
Trukkikuja 1
FI-01360 Vantaa
Tel.: +358-(0) 207 889 500

France
Pompes GRUNDFOS Distribution S.A.
Parc d'Activités de Chesnes
57, rue de Malacombe
F-38290 St. Quentin Fallavier (Lyon)
Tel.: +33-4 74 82 15 15
Fax: +33-4 74 94 10 51

Germany
GRUNDFOS GMBH
Schlüterstr. 33
40699 Erkrath
Tel.: +49-(0) 211 929 69-0
Fax: +49-(0) 211 929 69-3799
E-mail: infoservice@grundfos.de
Service in Deutschland:
kundendienst@grundfos.de

Greece
GRUNDFOS Hellas A.E.B.E.
20th km. Athinon-Markopoulou Av.
P.O. Box 71
GR-19002 Peania
Tel.: +0030-210-66 83 400
Fax: +0030-210-66 46 273

Hong Kong
GRUNDFOS Pumps (Hong Kong) Ltd.
Unit 1, Ground floor, Siu Wai industrial
Centre
29-33 Wing Hong Street & 68 King Lam
Street, Cheung Sha Wan
Kowloon
Tel.: +852-27861706 / 27861741
Fax: +852-27858664

Hungary
GRUNDFOS South East Europe Kft.
Tópark u. 8
H-2045 Törökbálint
Tel.: +36-23 511 110
Fax: +36-23 511 111

India
GRUNDFOS Pumps India Private
Limited
118 Old Mahabalipuram Road
Thoraipakkam
Chennai 600 097
Tel.: +91-44 2496 6800

Indonesia
PT GRUNDFOS Pompa
Graha intirub Lt. 2 & 3
Jln. Cililitan Besar No.454. Makasar,
Jakarta Timur
ID-Jakarta 13650
Tel.: +62 21-469-51900
Fax: +62 21-460 6910 / 460 6901

Ireland
GRUNDFOS (Ireland) Ltd.
Unit A, Merrywell Business Park
Ballymount Road Lower
Dublin 12
Tel.: +353-1-4089 800
Fax: +353-1-4089 830

Italy
GRUNDFOS Pompe Italia S.r.l.
Via Gran Sasso 4
I-20060 Truccazzano (Milano)
Tel.: +39-02-95838112
Fax: +39-02-95309290 / 95838461

Japan
GRUNDFOS Pumps K.K.
1-2-3, Shin-Miyakoda, Kita-ku
Hamamatsu
431-2103 Japan
Tel.: +81 53 428 4760
Fax: +81 53 428 5005

Kazakhstan
Grundfos Kazakhstan LLP
7' Kyz-Zhibek Str., Kok-Tobe micr.
KZ-050020 Almaty Kazakhstan
Tel.: +7 (727) 227-98-55/56

Korea
GRUNDFOS Pumps Korea Ltd.
6th Floor, Aju Building 679-5
Yeoksam-dong, Kangnam-ku, 135-916
Seoul, Korea
Tel.: +82-2-5317 600
Fax: +82-2-5633 725

Latvia
SIA GRUNDFOS Pumps Latvia
Deglava biznesa centrs
Augusta Deglava ielā 60
LV-1035, Rīga,
Tel.: + 371 714 9640, 7 149 641
Fax: + 371 914 9646

Lithuania
GRUNDFOS Pumps UAB
Smolensko g. 6
LT-03201 Vilnius
Tel.: + 370 52 395 430
Fax: + 370 52 395 431

Malaysia
GRUNDFOS Pumps Sdn. Bhd.
7 Jalan Peguam U1/25
Glenmarie industrial Park
40150 Shah Alam, Selangor
Tel.: +60-3-5569 2922
Fax: +60-3-5569 2866

Mexico
Bombas GRUNDFOS de México
S.A. de C.V.
Boulevard TLC No. 15
Parque industrial Stiva Aeropuerto
Apodaca, N.L. 66600
Tel.: +52-81-8144 4000
Fax: +52-81-8144 4010

Netherlands
GRUNDFOS Netherlands
Veluwezoom 35
1326 AE Almere
Postbus 22015
1302 CA ALMERE
Tel.: +31-88-478 6336
Fax: +31-88-478 6332
E-mail: info_gnl@grundfos.com

New Zealand
GRUNDFOS Pumps NZ Ltd.
17 Beatrice Tinsley Crescent
North Harbour Industrial Estate
Albany, Auckland
Tel.: +64-9-415 3240
Fax: +64-9-415 3250

Norway
GRUNDFOS Pumper A/S
Strømsveien 344
Postboks 235, Leirdal
N-1011 Oslo
Tel.: +47-22 90 47 00
Fax: +47-22 32 21 50

Poland
GRUNDFOS Pompy Sp. z o.o.
ul. Klonowa 23
Baranowo k. Poznania
PL-62-081 Przeźmierowo
Tel.: (+48-61) 650 13 00
Fax: (+48-61) 650 13 50

Portugal
Bombas GRUNDFOS Portugal, S.A.
Rua Calvet de Magalhães, 241
Apartado 1079
P-2770-153 Paço de Arcos
Tel.: +351-21-440 76 00
Fax: +351-21-440 76 90

Romania
GRUNDFOS Pompe România SRL
S-PARK BUSINESS CENTER, Clădirea A2, etaj 2
Str. Tipografilor, Nr. 11-15, Sector 1, Cod 013714
Bucuresti, Romania
Tel.: 004 021 2004 100
E-mail: romania@grundfos.ro

Serbia
Grundfos Srbija d.o.o.
Omladinskih brigada 90b
11070 Novi Beograd
Tel.: +381 11 2258 740
Fax: +381 11 2281 769
www.rs.grundfos.com

Singapore
GRUNDFOS (Singapore) Pte. Ltd.
25 Jalan Tukang
Singapore 619264
Tel.: +65-6681 9688
Faxax: +65-6681 9689

Slovakia
GRUNDFOS s.r.o.
Prievozská 4D 821 09 BRATISLAVA
Tel.: +421 2 5020 1426
sk.grundfos.com

Slovenia
GRUNDFOS LJUBLJANA, d.o.o.
Leskoškova 9e, 1122 Ljubljana
Tel.: +386 (0) 1 568 06 10
Fax: +386 (0)1 568 06 19
E-mail: tehnika-si@grundfos.com

South Africa
GRUNDFOS (PTY) LTD
16 Lascelles Drive, Meadowbrook Estate
1609 Germiston, Johannesburg
Tel.: (+27) 10 248 6000
Fax: (+27) 10 248 6002
E-mail: lgradidge@grundfos.com

Spain
Bombas GRUNDFOS España S.A.
Camino de la Fuentecilla, s/n
E-28110 Algete (Madrid)
Tel.: +34-91-848 8800
Fax: +34-91-628 0465

Sweden
GRUNDFOS AB
Box 333 (Lunnagårdsgatan 6)
431 24 Mölndal
Tel.: +46 31 332 23 000
Fax: +46 31 331 94 60

Switzerland
GRUNDFOS Pumpen AG
Bruggacherstrasse 10
CH-8117 Fällanden/ZH
Tel.: +41-44-806 8111
Fax: +41-44-806 8115

Taiwan
GRUNDFOS Pumps (Taiwan) Ltd.
7 Floor, 219 Min-Chuan Road
Taichung, Taiwan, R.O.C.
Tel.: +886-4-2305 0868
Fax: +886-4-2305 0878

Thailand
GRUNDFOS (Thailand) Ltd.
92 Chaloem Phrakiat Rama 9 Road
Dokmai, Pravej, Bangkok 10250
Tel.: +66-2-725 8999
Fax: +66-2-725 8998

Turkey
GRUNDFOS POMPA San. ve Tic. Ltd. Sti.
Gebze Organize Sanayi Bölgesi
Ihsan dede Caddesi
2. yol 200. Sokak No. 204
41490 Gebze/ Kocaeli
Tel.: +90 - 262-679 7979
Fax: +90 - 262-679 7905
E-mail: satis@grundfos.com

Ukraine
ТОВ "ГРУНДФОС УКРАЇНА"
Бізнес Центр Європа
Столичне шосе, 103
м. Київ, 03131, Україна
Tel.: (+38 044) 237 04 00
Fax: (+38 044) 237 04 01
E-mail: ukraine@grundfos.com

United Arab Emirates
GRUNDFOS Gulf Distribution
P.O. Box 16768
Jebel Ali Free Zone, Dubai
Tel.: +971 4 8815 166
Fax: +971 4 8815 136

United Kingdom
GRUNDFOS Pumps Ltd.
Grovebury Road
Leighton Buzzard/Beds. LU7 4TL
Tel.: +44-1525-850000
Fax: +44-1525-850011

U.S.A.
Global Headquarters for WU
856 Koomey Road
Brookshire, Texas 77423 USA
Phone: +1-630-236-5500

Uzbekistan
Grundfos Tashkent, Uzbekistan
The Representative Office of Grundfos Kazakhstan in Uzbekistan
38a, Oybek street, Tashkent
Tel.: (+998) 71 150 3290 / 71 150 3291
Fax: (+998) 71 150 3292

Trademarks displayed in this material, including but not limited to Grundfos and the Grundfos logo, are registered trademarks owned by The Grundfos Group. © 2025 Grundfos Holding A/S, all rights reserved.

93355268 **03.2025**

ECM: 1418779