KSN pumps

75-800 kW

50/60 Hz, DIN

Installation and operating instructions

GRUNDFOS

KSN pumps

English (GB)

Installation and operating instructions 4

Original installation and operating instructions

Table of contents

1. General information 5
1.1 Hazard statements 5
1.2 Notes 5
1.3 Target group. 5

2. Product introduction 6
2.1 Product description 6
2.2 Intended use 6
2.3 Pumped liquids 6
2.4 Identification. 7

3. Receiving the product. 8
3.1 Transporting the product 8
3.2 Inspecting the product 8
3.3 Lifting the product. 8

4. Mechanical installation 11
4.1 Mounting the product 12
4.2 Foundation 12
4.3 Permanent, vertical, submerged installation on auto coupling 14
4.4 Permanent, horizontal, dry installation 16
4.5 Level of pumped liquids. 18
4.6 Torques for inlet and outlet flanges. 18

5. Electrical connection 18
5.1 Motor protection. 19
5.2 Switches and sensors 19
5.3 Pump control 21
5.4 Wire colours. 23
5.5 Wiring diagrams. 24
5.6 Frequency converter operation. 33
5.7 Cable data. 34

6. Startup 34
6.1 Direction of rotation check 34

7. Storage 35

8. Service and maintenance. 35
8.1 Piping 36
8.2 Pump parts 36
8.3 Ball bearings 36
8.4 Cooling jacket. 36
8.5 Visual check. 36
8.6 Impeller clearance inspection. 36
8.7 Oil check and change. 36
8.8 Cable entry check. 36
8.9 Insulation resistance check. 37
8.10 Spare parts 37
8.11 Contaminated pumps 37

9. Troubleshooting 37
9.1 Pump does not start or stops without visible cause. 37
9.2 Pump does not start or stop 37
9.3 Pump runs, but does not deliver the flow rate 38
9.4 Pump starts, but stops immediately 38
9.5 The pump is vibrating or too loud. 38
9.6 There is water in the oil. 38
9.7 The oil level is low 38

10. Technical data 39
10.1 PH value 39
10.2 Density and viscosity of the pumped liquid. 39
10.3 Flow rate 39
10.4 Ambient temperature 39
10.5 Liquid temperature 39
10.6 Operating mode. 39
10.7 Installation depth 39
10.8 Solid size 39
10.9 Enclosure class 39
10.10 Sound pressure 39
10.11 Electrical data. 39

11. Disposing of the product 39

1. General information

Read this document before you install the product. Installation and operation must comply with local regulations and accepted codes of good practice.

1.1 Hazard statements

The symbols and hazard statements below may appear in Grundfos installation and operating instructions, safety instructions and service instructions.

DANGER

Indicates a hazardous situation which, if not avoided, will result in death or serious personal injury.

WARNING

Indicates a hazardous situation which, if not avoided, could result in death or serious personal injury.

CAUTION

Indicates a hazardous situation which, if not avoided, could result in minor or moderate personal injury.

The hazard statements are structured in the following way:

SIGNAL WORD

Description of the hazard

Consequence of ignoring the warning

- Action to avoid the hazard.

1.2 Notes

The symbols and notes below may appear in Grundfos installation and operating instructions, safety instructions and service instructions.

Observe these instructions for explosion-proof products.

A blue or grey circle with a white graphical symbol indicates that an action must be taken.

A red or grey circle with a diagonal bar, possibly with a black graphical symbol, indicates that an action must not be taken or must be stopped.

If these instructions are not observed, it may result in malfunction or damage to the equipment.

Tips and advice that make the work easier.

1.3 Target group

These installation and operating instructions are intended for professional installers.

2. Product introduction

2.1 Product description

This booklet describes instructions for the installation, operation and maintenance of Grundfos KSN pumps, 75 - 800 kW.

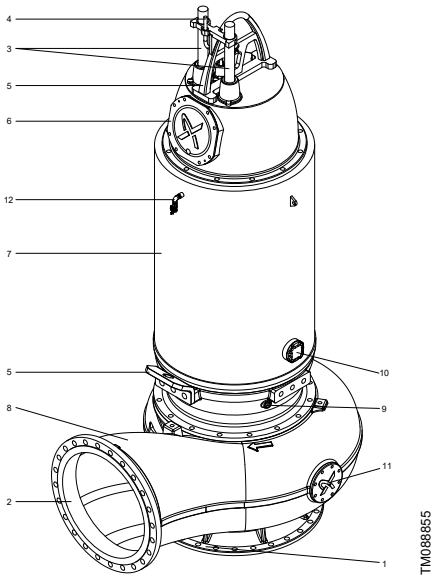

KSN pump

Position	Description
1	Inlet
2	Outlet
3	Power supply cable
4	Control cable
5	Lifting bracket
6	Inspection cover
7	Submersible motor
8	Pump housing
9	Oil drainage hole
10	Inspection cover, motor
11	Inspection cover, pump
12	Air vent valve

The KSN pump ranges are free-flow channel impeller pumps specifically designed for pumping sewage and wastewater in a wide range of municipal and industrial applications. The pumps are made of resistant materials, such as cast iron and stainless steel. These materials ensure good durability in wastewater applications. The pumps are fitted with motors from 75 to 800 kW as standard range and with outlet sizes of DN 500 - 600 and 800. The motors are either 6, 8, 10, 12 or 14-pole motors, depending on the motor size. The free passage in the pumps is 100 to 230 mm. The pumps are available for these types of installation:

- submerged installation on auto-coupling system
- dry installation, vertical
- dry installation, horizontal
- free standing.

Max. submersion depth is 20 m when installed on auto-coupling.

2.2 Intended use

These pumps are designed for pumping sewage and wastewater in a wide range of municipal, private and industrial applications.

2.3 Pumped liquids

The KSN pumps, ranges DN500, 600 and 800 are specially designed for wastewater in a wide range of applications, such as:

- raw-water intake,
- wastewater transportation,
- sewage treatment plants,
- municipal pumping stations,
- industrial process water.

The pumps are suitable for both temporary and permanent installation.

Liquid:

- pH value: 4-10.
- liquid temperature: 0 °C to +40 °C.

When pumping liquids with a density and/or a kinematic viscosity higher than that of water, use motors with correspondingly higher outputs.

Density and viscosity of pumped liquid:

Maximum density: 1000 kg/m^3, maximum kinematic viscosity: 1 mm^2/s (1cSt).

2.4 Identification

2.4.1 Nameplate

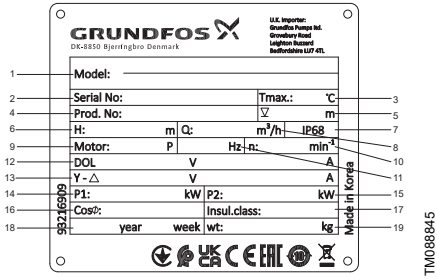

Nameplate example

Position	Description
1.	Type designation
2.	Serial number
3.	Max. ambient temperature
4.	Product number
5.	Max. installation depth
6.	Duty point flow head
7.	Enclosure class according to IEC 60529
8.	Duty point flow rate
9.	Number of poles
10.	Rated speed
11.	Frequency
12.	Voltage and current, DOL starting
13.	Voltage and current, Y-D starting
14.	Input power
15.	Shaft power
16.	Power factor
17.	Insulation class
18.	Production code (year and week)
19.	Pump weight

2.4.2 Type key

Example: KSN3.120.500.5000.6.H.N.5.38.S.Z

Code	Explanation	Designation
KSN	Grundfos Sewage and wastewater pump	Pump type
3	Three channel	Impeller type
4	Four channel	
120	Maximum solid size [mm]	Pump passage
500	Pump outlet nominal diameter [mm]	Pump outlet
5000	500 kW: P2 x 10	Power [kW]
6	6 poles	Number of poles
8	8 poles	
10	10 poles	
12	12 poles	
14	14 poles	
H	High	Pressure version
M	Medium	
L	Low	
N	Pump without Ex approval	Pump version
5	50Hz	Frequency [Hz]
6	60Hz	
38	380 V	Voltage [V]
41	415 V	
46	460 V	
66	660 V	
2H	3000 V	
3H	3300 V	
4H	4160 V	
6H	6000 V	
7H	6600 V	
10H	10000 V	
S	Standard sensor version	Sensor version
A	Sensor version A	
B	Sensor version B	
F	Sensor version FPV	
Z	Custom-built product	Customization

3. Receiving the product

The pump is supplied from the factory in a proper packaging in which it should remain until installation. Make sure that the pump cannot roll or fall over.

3.1 Transporting the product

All lifting equipment must be rated for the purpose and checked for damage before lifting the pump. The lifting equipment rating must not be exceeded. The pump weight is stated on the nameplate.

WARNING
Crushing hazard
Death or serious personal injury
- Lifting and moving must be done by a trained person.

CAUTION
Sharp element
Minor or moderate personal injury
- Packaging parts may be pointy or sharp. Wear hand protection.

CAUTION
Crushing hazard
Minor or moderate personal injury
- Make sure the pump cannot roll or fall over.

WARNING
Crushing hazard
Death or serious personal injury
- Always lift the pump by its lifting bracket or use a forklift.

DANGER
Electric shock
Death or serious personal injury
- Never lift the pump by the power cable, hose, or pipe.

Leave the cable-end protectors and control cables on the power supply until making the electrical connection. Whether insulated or not, the free cable end must never be exposed to moisture.

3.2 Inspecting the product

During storage, protect the pump against moisture and heat.

If the pump is not in operation or is being stored for more than a month, turn the impeller once a month.

WARNING
Crushing hazard
Death or serious personal injury
- Do not turn the impeller by hand. Always use an appropriate tool.

On pumps fitted with a guide vane, be careful not to damage the guide vane when turning the impeller.

After storage, inspect the pump before putting it into operation. Make sure that the impeller can rotate freely. Pay attention to the condition of the shaft seals, O-rings, cable entries, and potential glycol leakage.

3.3 Lifting the product

Weights are stated with 10 m cables.

WARNING
Crushing of feet
Death or serious personal injury
- Always use a forklift for lifting the pump.
- Always lift the pump by its marked lifting points.

Pumps are provided with a center of gravity label to help lifting.

Weights of sewage pumps with cooling jacket for submerged installation on auto-coupling include guide shoes.

Weights of sewage pumps with cooling jacket for horizontal dry installation include horizontal base stands.

Pumps have the following weight ranges:

Pump outlet	Weight range [kg]	
	50 Hz	60 Hz
DN 500	5550-8270 kg	5550-7780 kg
DN 600	7550-12980 kg	7570-13130 kg
DN 800	8690-16900 kg	11420-16750 kg

WARNING
Crushing of feet
Death or serious personal injury
- If the pump is tilted in more than a 10° angle in any direction, it might fall over.
- During transportation or service always secure the pump with chains, or position it horizontally.

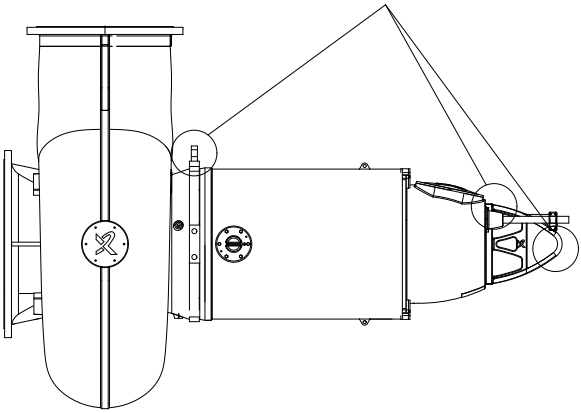

TM089036

Lifting points

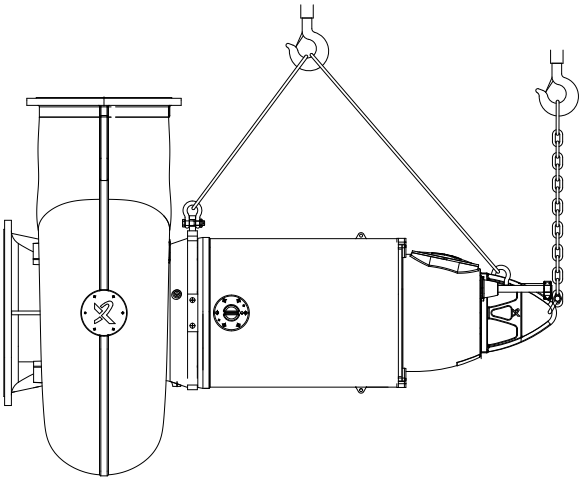

TM089037

Lifting the pump, step 1

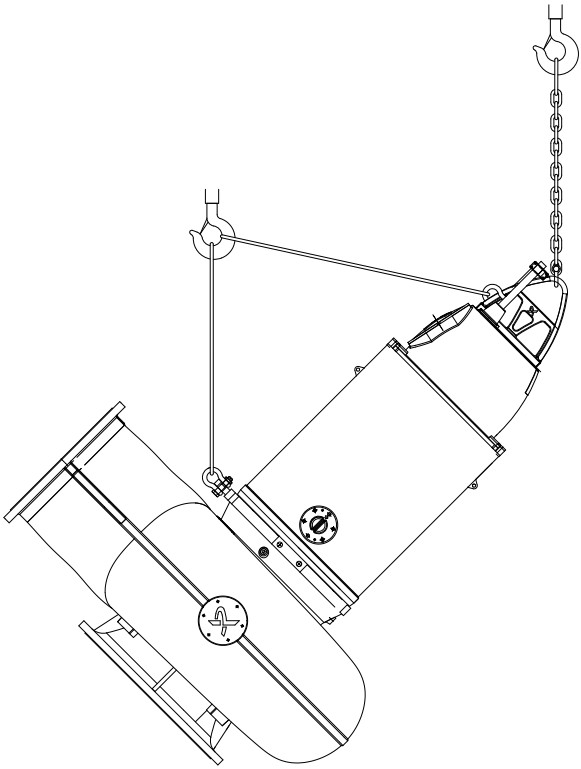

TM089038

Lifting the pump, step 2

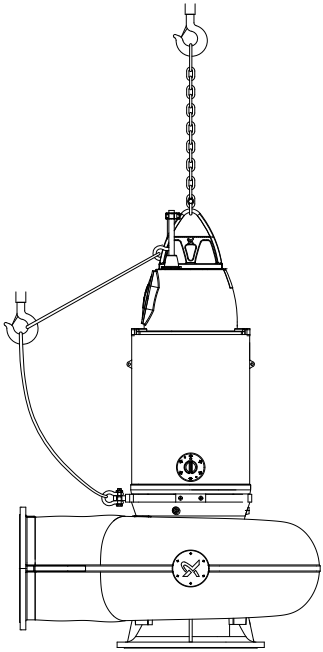

TM089040

Lifting the pump, step 3

4. Mechanical installation

Fit the extra nameplate supplied with the pump at the installation site.

Observe all safety regulations at the installation site. Make sure there is adequate fresh air supply in the pit.

DANGER
Electric shock
Death or serious personal injury

- Before starting any work on the product, make sure that the power supply is switched off and it cannot be switched on unintentionally.

DANGER
Crushing hazard
Death or serious personal injury

- During installation, always support the pump by lifting chains or place it in horizontal position to secure stability.

CAUTION
Crushing hazard
Minor or moderate personal injury

- Do not put your hands or any tool into the pump inlet or outlet after the pump has been connected to the power supply, unless the main switch has been locked in position 0.
- Make sure that the power supply cannot be switched on unintentionally.

The free end of the cable must not be submerged as water may penetrate into the motor.

Make sure that the pipes are installed without the use of undue force. No loads from the weight of the pipes must be carried by the pump. Use loose flanges to ease the installation and to avoid pipe tension at the flanges.

4.1 Mounting the product

Installation type	Accessories
Sewage pump with cooling jacket for submerged installation	Auto coupling
Sewage pump with cooling jacket for vertical dry installation	Base plate for vertical installation
Sewage pump with cooling jacket for horizontal dry installation	Base plate for horizontal installation

4.2 Foundation

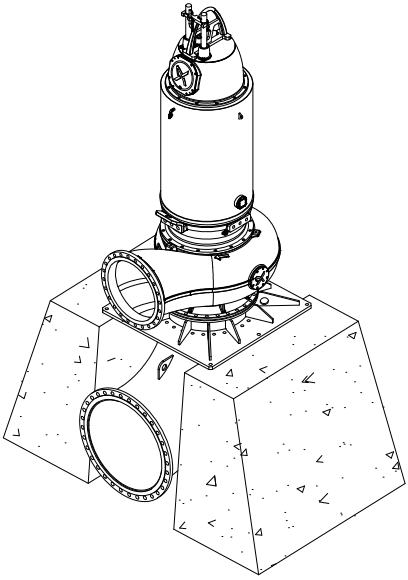

Permanent vertical dry installation

The rotating equipment generates vibrations when an impeller or rotor is turning at high speed.
Proper installation and anchorage of the pumps and accessories are crucial to limit vibrations and achieve reliable installation:

- The foundation and concrete must support the weight of the pump including accessories, the liquid passing through the pump and the forces generated by the pump.
- The mass of the concrete foundation must be minimum 3-5 times heavier than the weight of the supported equipment and must have sufficient rigidity to withstand the axial, transverse, and torsional loads generated by the pump.
- The foundation must be 15 cm wider than the baseplate for pumps up to 350 kW and 25 cm wider for larger pumps.
- The concrete used in the foundation must have a minimum tensile strength of 250 N/cm^2.
- Always use epoxy grout to fasten the baseplate to the foundation.
- In case of products with DN600 and DN800 suction bends, make sure to check the height and other dimensions of the bend support before installing.

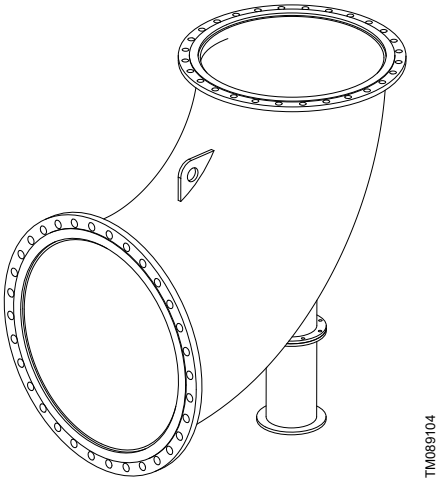

Bend for permanent vertical dry installation, DN600L, DN800

Check the following table for base unit bolt lengths and pull-out strength:

Outlet	Foundation bolt
DN 500	6 x M30 x 400L
DN 600	6 x M30 x 400L
DN 800	6 x M36 x 500L

4.2.1 Stop levels for installations on concrete foundation

Make sure to set the starting levels above the pump housing for making the cooling jacket able to fill up before the pump starts pumping.

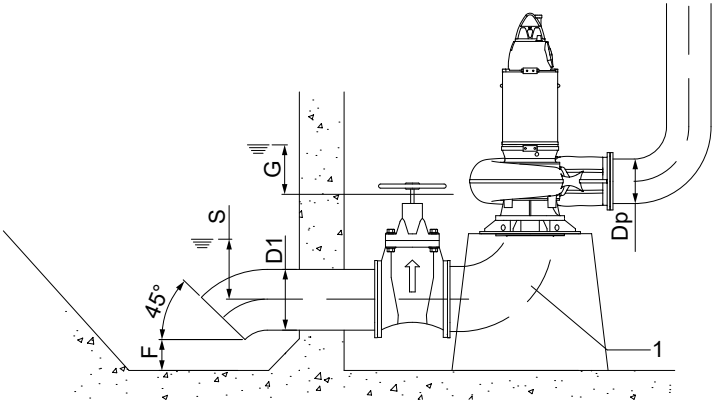

Position	Description
S	Minimum stop level
F	Minimum distance between the bottom of the pit and the lowest part of the inlet pipe, F = 0.5 x D1
G	Minimum start level, G = Dp
D1	D1 = S
1	Reducing bend

4.3 Permanent, vertical, submerged installation on auto coupling

Pumps for permanent, vertical installation in a pit can be installed on a stationary auto-coupling unit and operated completely or partially submerged in the pumped liquid.

Make sure that the pipes are installed without the use of undue force. No loads from the weight of the pipes must be carried by the pump. Use loose flanges to ease the installation and to avoid pipe tension at the flanges.

Do not use elastic elements or bellows to connect the pipes.

The guide rails must not have any axial play as this may cause noise during operation

Guide shoe is mounted on the outlet flange by default.

1. Drill mounting holes for the guide-rail bracket on the inside of the pit and fasten it provisionally with two screws.
2. Place the auto-coupling base unit on the bottom of the pit. If the bottom is uneven, the auto-coupling base unit must be supported. Use a plumb line to establish the correct positioning. Fasten the auto coupling with expansion bolts.
3. Connect the outlet pipe in accordance with the generally accepted procedures. Avoid exposing the pipe to distortion or tension.
4. Place the guide rails on the auto-coupling base unit and adjust the length of the rails to the guide-rail bracket at the top of the pit.
5. Unscrew the provisionally fastened guide-rail bracket. Insert the expansion dowels into the holes. Fasten the guide-rail bracket on the inside of the pit. Tighten the bolts in the expansion dowels.
6. Clean out debris before lowering the pump into the pit.
7. Fit the guide shoe to the pump.
8. Slide the guide shoe along the guide-rails and lower the pump into the pit by a chain secured to the lifting bracket. When the pump reaches the auto-coupling base unit, pull the lifting chain towards the guide rail several times to shake off any foreign substances. When the chain is unstrained, the pump connects automatically to the auto-coupling unit.
9. Hang up the end of the chain on a suitable hook at the top of the pit. Make sure that the chain is straight but not strained.
10. Adjust the length of the power cable by coiling it up on a relief fitting to ensure that the cable is not damaged during operation. Fasten the relief fitting to a suitable hook at the top of the pit. Make sure that the cables are not sharply bent or pinched.
11. Connect the power- and the control cables, if any.

The free end of the cable must not be submerged as water may leak into the motor.

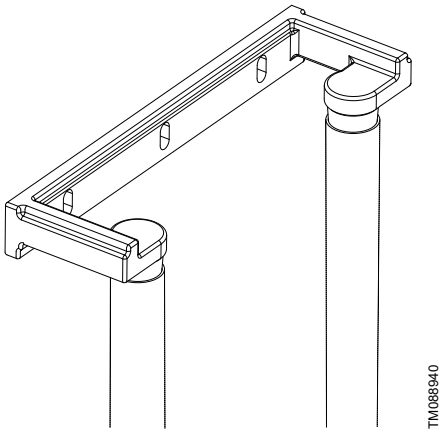

Upper guide rail bracket

For the best efficiency, follow pedestal heights in the table below:

Position	Pump type	Required pedestal height [mm]
A	DN 500	250
	DN 600	300
	DN 800	450

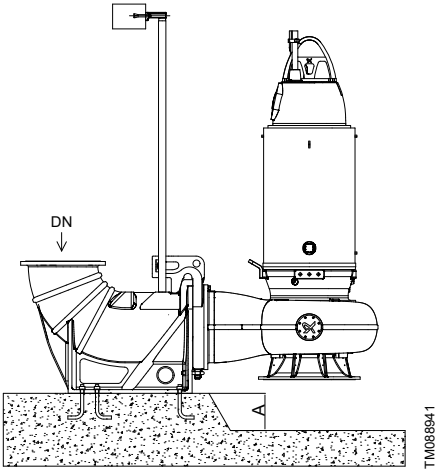

Auto coupling base installation on pedestal

The pump must be tilted in 0°-7° angle when lowered on the guide rail.

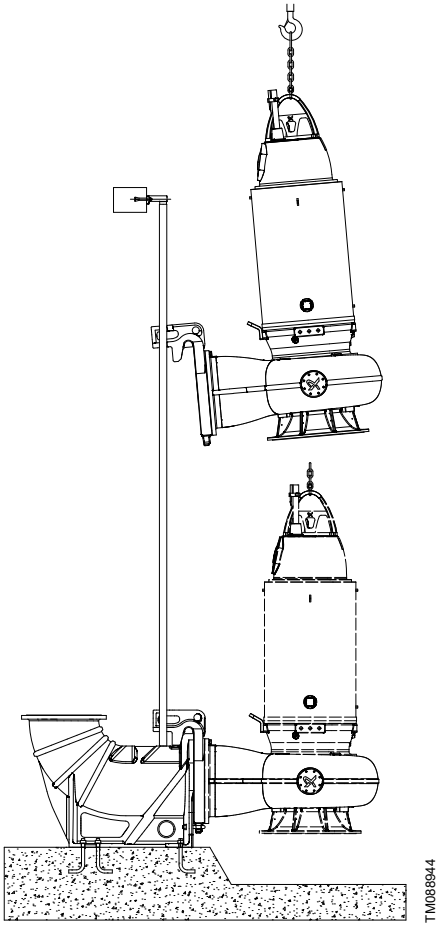

Lowering the pump on the guide rail

Check the following table for base unit bolt lengths:

Outlet	Foundation bolt
DN 500	4 x M42 x 400L
DN 600	4 x M42 x 630L
DN 800	6 x M42 x 630L

Make sure to check dimension L not to interfere with the guide shoe.

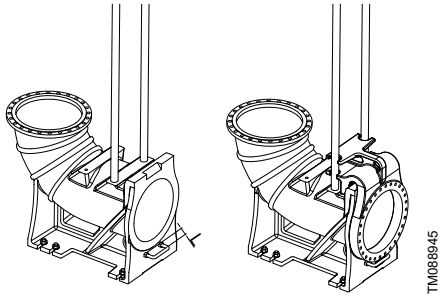

Auto coupling base unit with guide shoe

Pump type	L [mm]
DN 500	88
DN 600	108
DN 800	138

4.4 Permanent, horizontal, dry installation

Use isolating valves on either side of the pump to facilitate service on it.

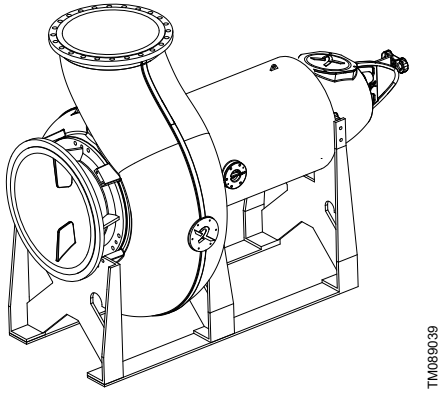

KSN pump on horizontal stand

Pumps in dry installation are installed permanently in a pump room.

The pump motor is enclosed and watertight.

Proceed as follows:

1. Mark and drill mounting holes in the concrete floor or foundation.
2. Fit the bracket or base stand to the pump.
3. Fasten the pump with expansion bolts.
4. Check that the pump is vertical or horizontal.
5. Fit the inlet and outlet pipes and isolating valves, if used, and ensure that the pump is not stressed by the pipes.
6. Adjust the length of the power cable by coiling it up on a relief fitting to ensure that the cable is not damaged during operation. Fasten the relief fitting to a suitable hook. Make sure that the cables are not sharply bent or pinched.
7. Connect the power- and the control cables, if any.

Fasten the pump to the inlet and outlet pipes with flange connections.

In horizontal installations, use a reducer between the inlet pipe and the pump. The reducer must be eccentric and has to be installed the way its straight edge is pointing upwards. Therefore the accumulation of air in the inlet pipe and the risk of operation disturbance are eliminated.

4.4.1 Stop levels for horizontal installation

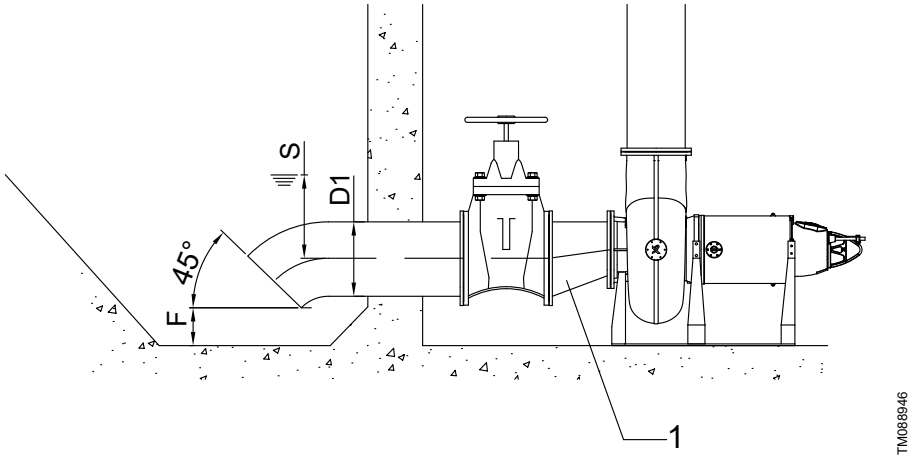

Position	Description
S	Minimum stop level
F	Minimum distance between the bottom of the pit and the lowest part of the inlet pipe, F = 0.5 x D1
G	Minimum start level, G = Dp
D1	D1 = S
1	Eccentric reducer

4.5 Level of pumped liquids

Do not let the pump run dry.

Install an additional level switch to ensure that the pump is stopped in case the stop level switch is not working.

To ensure adequate motor cooling, the following minimum requirements must be met:

- The pump housing of sewage pumps with cooling jacket for submerged installation must be completely covered by the pumped liquid, and the air vent valve must always be open.
- In case of sewage pumps with cooling jacket for vertical or horizontal dry installation, the air must be evacuated from the cooling jacket through an air-vent valve before starting up for the first time, or after long standstill periods. During operation, the cooling jacket must be filled with pumped liquid.

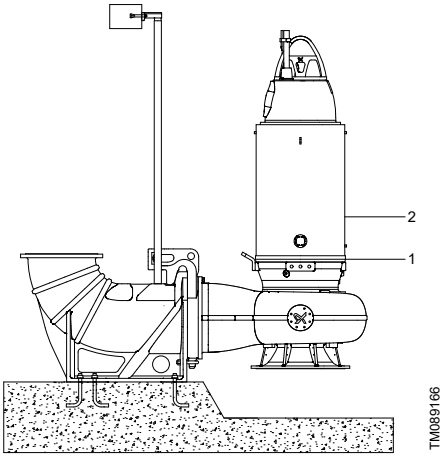

Liquid levels

Position	Description
1	Top of the pump housing
2	Stop level

4.6 Torques for inlet and outlet flanges

Select the bolt length based on the recommended dimensions and on-site conditions.

Discharge	Foundation bolt	
	Auto-coupling base unit	Dry, vertical information
DN500	4 × M42 × 400L	6 × M30 × 400L
DN600	4 × M42 × 630L	6 × M30 × 400L
DN800	6 × M42 × 630L	6 × M36 × 500L

5. Electrical connection

DANGER
Electric shock
Death or serious personal injury

- Before starting any work on the product, make sure that the power supply is switched off and that it cannot be switched on unintentionally.

DANGER
Electric shock
Death or serious personal injury

- The pump must be grounded. Before connecting the pump to the voltage supply, make sure the connection to ground complies withthe local regulations.

Connect the pump to an external main switch ensuring all-pole disconnection with a contact separation according to EN 60204-1, 5.3.2. It must be possible to lock the main switch in position 0.

The supply voltage and frequency are marked on the nameplate. Make sure that the motor is suitable for the power supply at the installation site.

The electrical connection must comply with the local regulations.

Connect the pumps to a controller with a motor protection relay with IEC trip class 10 or 15 or NEMA-equivalent.

Before installation and the first startup of the pump, check the condition of the cable to avoid short circuits.

The most commonly used startup methods are the following:

- Direct-on-line starting (DOL). See Appendix.
- Star-delta starting (Y/D). See Appendix.
- Soft start.

The selection of suitable starting method depends on several considerations on usage and mains supply conditions.

When using star-delta start, it is important to keep switching transient time to a minimum to avoid high transient torques. Use a time relay with a switching time of maximum 50 ms or according to the manufacturer's specifications.

The pump can be operated with a frequency converter according to the specifications of the manufacturer.

5.1 Motor protection

The motors have three thermal protectors connected in series and two moisture switches connected in series. Protectors and switches are connected in two separate circuits. Thermal protectors are reversible, moisture switches are irreversible. The thermal protection circuit (conductors A and B) and the moisture protection circuit (conductors B and C) have separate outputs to enable separate alarms if motor is overheated or affected by moisture.

All other sensor connections are either led out of the motor (sensor version B) via conductors D to J, or connected to the SM113 unit (sensor version S) and led out of the motor via conductors D and G.

5.2 Switches and sensors

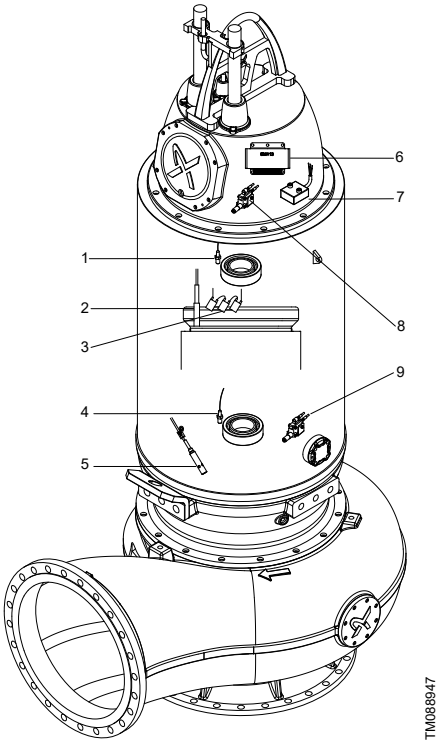

Sensor and switch layout

Position	Description
1	Bearing thermal protection (upper)
2	Stator thermal protection (Pt100)
3	Stator thermal protection (Bi-metal)
4	Bearing thermal protection (lower)
5	Water-in-oil sensor (WIO)
6	SM113 (optional)
7	Vibration sensor (PVS3, optional)
8	Terminal box moisture sensor (switch)
9	Motor housing moisture sensor (switch)

5.2.1 Thermal switches

Three bimetallic thermal switches are built into the stator windings. A contact opens in case of overtemperature (130 °C).

The motor-protective circuit breaker of the pump controller must include a circuit which automatically disconnects the power supply in case the protective circuit is opened.

The thermal switches are connected in series in a separate circuit in the power or control cables.

The thermal switches must be connected to the motor protection safety circuit in the control cabinet.

Technical data:

- Two conductors
- Operating voltage: 12-250 VAC
- Maximum switching current: 2.5 at cos φ = 1

5.2.2 Pt100

The sensor is connected in a separate circuit in the power or control cables.

Connect the sensor to a Pt100 relay in SM113 or IO113.

The sensor resistance values are the following:

- 100 Ω at 0 °C
- 138.5 Ω at 100 °C
- 107.8 Ω at 20 °C.

Do not use a megohmmeter for testing the alarm due to the low resistance of the sensor circuits.

The temperature limits are the following:

- 120 °C: warning for bearing temperature
- 130 °C: optional warning for high stator temperature, in case of PTC sensor used for monitoring

5.2.3 Water-in-oil (WIO) sensor

The WIO sensor measures the water content in the oil chamber and have the following signals:

- 4-20 mA: 0-20% of water in oil does not cause a reaction
- 22 mA: water content outside of the measuring range causes a warning
- 3.5 mA: low oil level causes an alarm.

The sensor is fitted in a stainless tube for mechanical protection.

The WIO sensor can be used with other pump controllers than IO113 or SM113 with 4-20 mA inputs.

Lack of oil may overheat and damage the mechanical shaft seals. The WIO sensor in the oil chamber triggers the alarm if the quality or quantity of the oil in oil chamber is inadequate.

Technical data:

- Input voltage: 12-24 VDC
- Output current: 3.4-22 mA
- Power input: 0.6 W
- Ambient temperature: 0-70 °C.

5.2.4 Moisture switch

Moisture switches are motor protection devices protecting the motor from damage due to moisture.

Moisture switches are non-reversing and must be replaced after they have been activated.

Pumps have two moisture switches:

- One in the terminal box
- One in the lower part of the stator housing.

The motor-protective circuit breaker of the pump controller must include a circuit which automatically disconnects the power supply in case the protective circuit of the pump is opened.

Moisture switches are connected to a separate circuit via the control cable.

Moisture switches must also be connected to the safety circuit of the separate pump controller.

Technical data:

- They have two conductors
- Operating voltage: 12-250 VAC
- Maximum switching current: 2.5 A at cos φ = 1.

5.2.5 Vibration sensor (PVS3)

TM077106

PVS3 vibration sensor

The PVS 3 sensor monitors the vibration level to protect the pump and the pipe network against damage.

A change in the vibration level indicates an abnormal situation. Make sure that a service inspection is carried out before the pump or the pipe network is damaged.

5.3 Pump control

The following pump controller devices are available on demand for KSN/KSE pumps:

- Grundfos Dedicated Controls
- IO 113
- SM 113
- MP 204
- GU 02.

5.3.1 Dedicated controls

TM084174

Grundfos Dedicated Controls is capable of controlling up to six pumps.

It consists of the following components:

- CU 361 control unit
- IO 351B module
- IO 113 protection module.

The Dedicated Controls system starts and stops pumps with the following devices:

- float switches
- analog pressure sensors
- ultrasonic sensors.

By combining float switches with analog pressure sensors, the water level can be controlled.

Two additional safety float switches can be installed in the Dedicated Controls system for high level and dry-running alarm.

5.3.2 IO 113

GR-1014619

IO113 module

The IO 113 module is the interface between a pump with analogue and digital sensors and the pump controller. The most important sensor data are indicated on the front panel.

One pump can be connected to one IO 113.

With the sensors, IO 113 provides a galvanic separation between the motor voltage in the pump and the connected controller.

IO 113 enables the following functions:

- overtemperature protection
- monitoring the sensors for analogue measurement of:
  - motor temperature
  - leakage (WIO)
  - pump vibrations (PVS3)
  - stator insulation resistance
  - bearing temperature
  - digital measurement of moisture in motor.
- stopping the pump in case of alarm
- monitoring the pump remotely through RS485 communication (Modbus or GENIbus).

5.3.2.1 Measurement of insulation resistance

IO 113 measures the insulation resistance between a stator winding and ground:

- resistance above 10 MΩ = OK
- resistance between 10 MΩ and 1 MΩ = warning
- resistance below 1 MΩ = alarm.

5.3.3 SM 113

GR-1014621

SM 113 module

The SM 113 module is used for collecting and transferring sensor data. SM 113 works with IO 113 through power line communication using the Grundfos GENIbus protocol.

SM 113 collects data from the following devices:

- current sensors, 4-20 mA
  - Vibration sensor
  - WIO sensor
  - Water-in-air sensor (WIA)
  - Pt100/Pt1000 thermal sensors.
- Maximum 3 Pt100 thermal sensors
- Maximum 4 Pt1000 thermal sensors.

SM 113 is fitted with a 2.7 kΩ resistor to avoid false sensor alarms in the IO 113.

5.3.4 MP 204

GR-1015249

MP 204 is an electronic control unit designed for monitoring and protecting motors, pumps, machines, cables and cable joints.

It monitors the following:

- System insulation resistance to earth before start
- Motor temperature (if the motor is fitted with a Pt100/Pt1000, or PTC sensor).
- Current consumption and unbalance
- Supply voltage
- Phase sequence
- Missing phase
- Harmonic distortion
- Power factor (cos ϕ)
- Starting capacitor (single-phase operation only)
- Run capacitor (single-phase operation only).

MP204 protects against the following:

- Overload
- Dry running
- Motor failure
- High motor temperature
- Power supply failure.

MP204 includes the following by standard:

- Display
- Relay output for external fault indication
- GENIbus connection
- Pt100/Pt1000 sensor input
- PTC/thermal switch input

5.3.5 GU02

GU02 is a complete monitoring unit, it can monitor the pump status by detecting motor overheating, high temperature of bearings, seal leakage and moisture in junction box if there is any problem you can recognize it by alarm sound.

GU02 can monitor:

- Over temperature of stator windings (R, S, T)
- High temperature of bearings (Upper and Lower)
- Moisture in the terminal box
- Seal leakage in bearing housing.

5.4 Wire colours

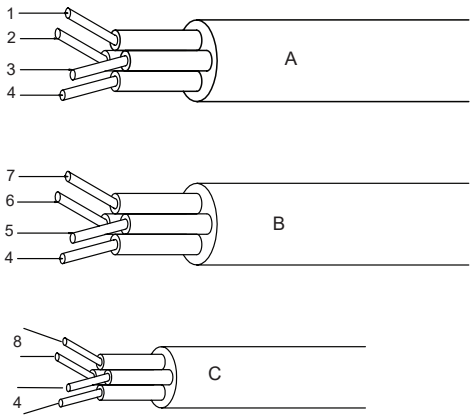

Wire colours, DOL, two power cables

Position	Description
A	Primary power cable
1	U1 - red
2	W1 - black
3	V1 - white
4	Earth - green
B	Secondary power cable
5	U2 - red
6	W2 - black
7	V2 - white
C	Sensor cable
8	A to J - white

5.5 Wiring diagrams

D = Control cable.

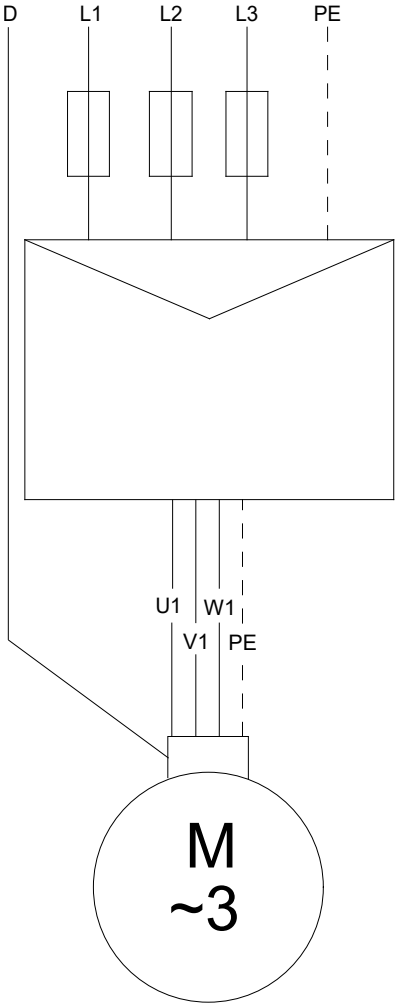

TM056180

Direct-online-starting, one power cable

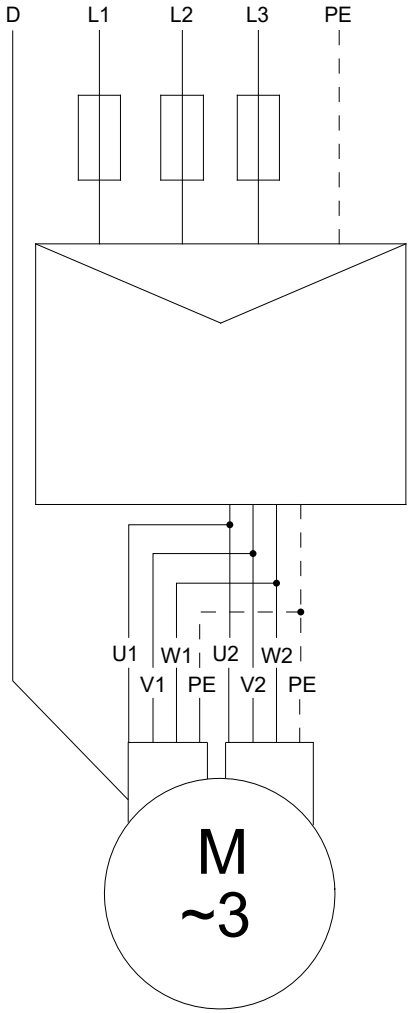

TM056181

Direct-online-starting, two power cables

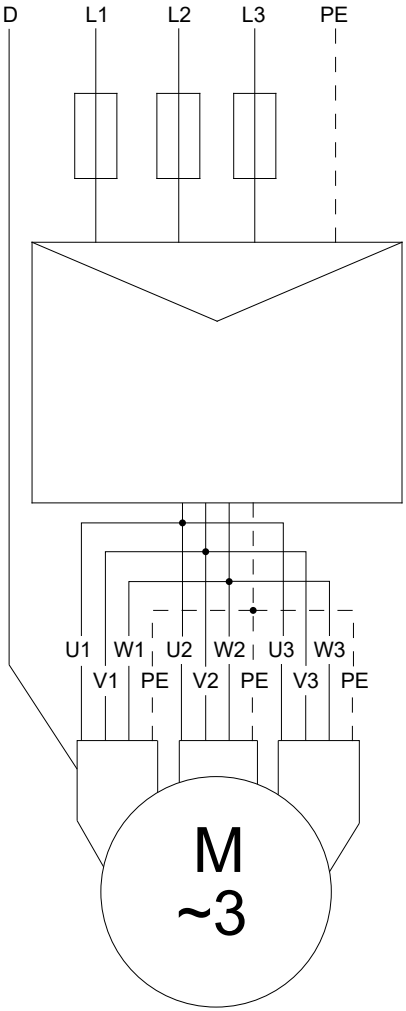

TM056182

Direct-online-starting, three power cables

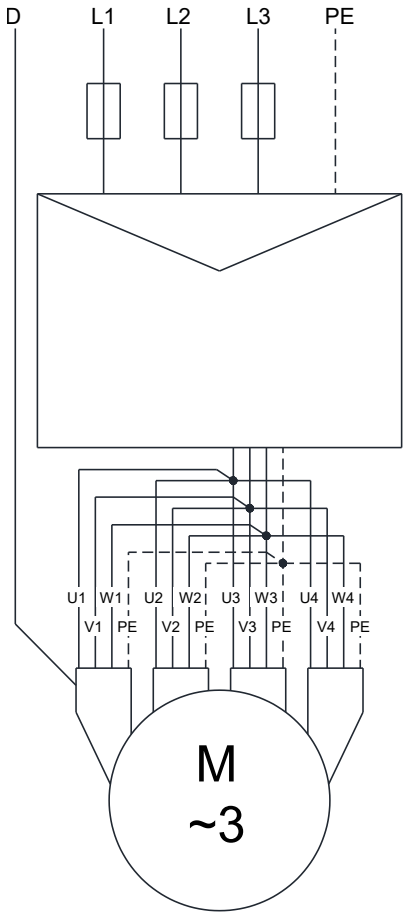

TM089289

Direct-on-line starting, four power cables

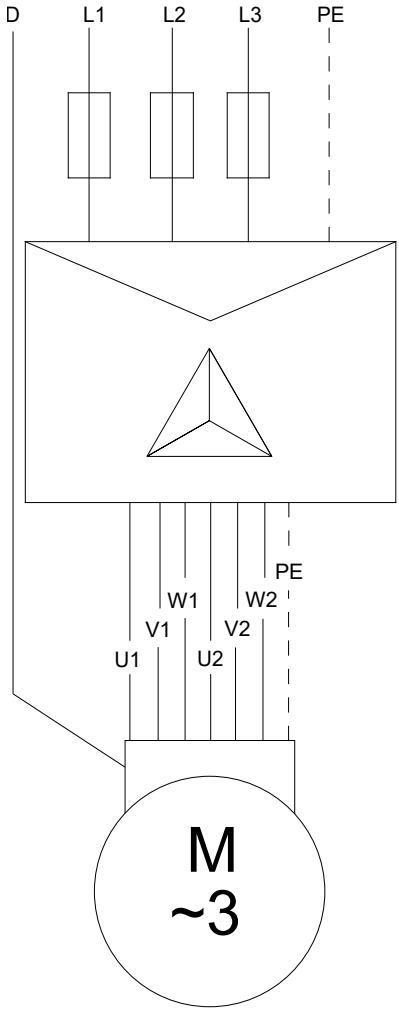

Star-delta-starting, one power cable

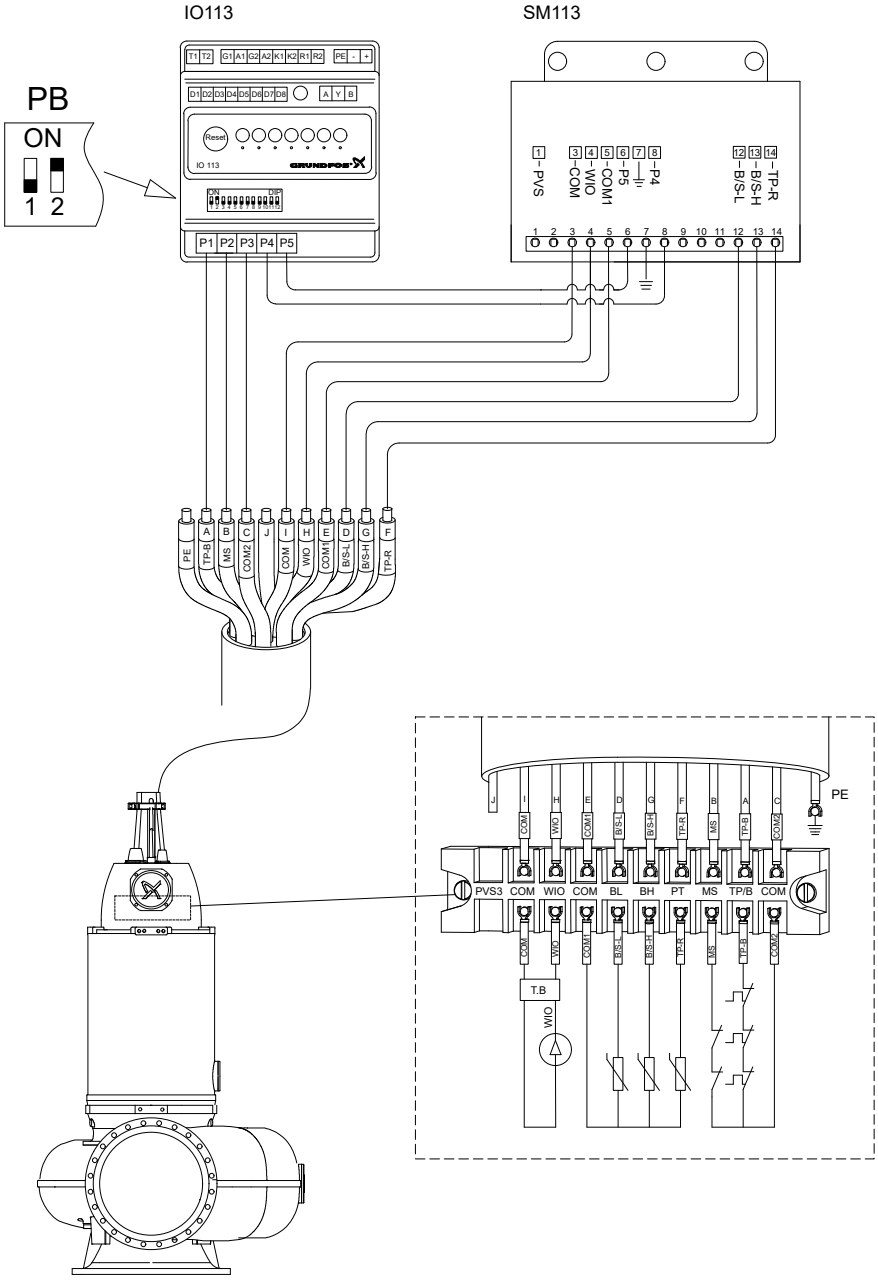

Wiring diagram of IO113 and SM113 (Sensor version A)

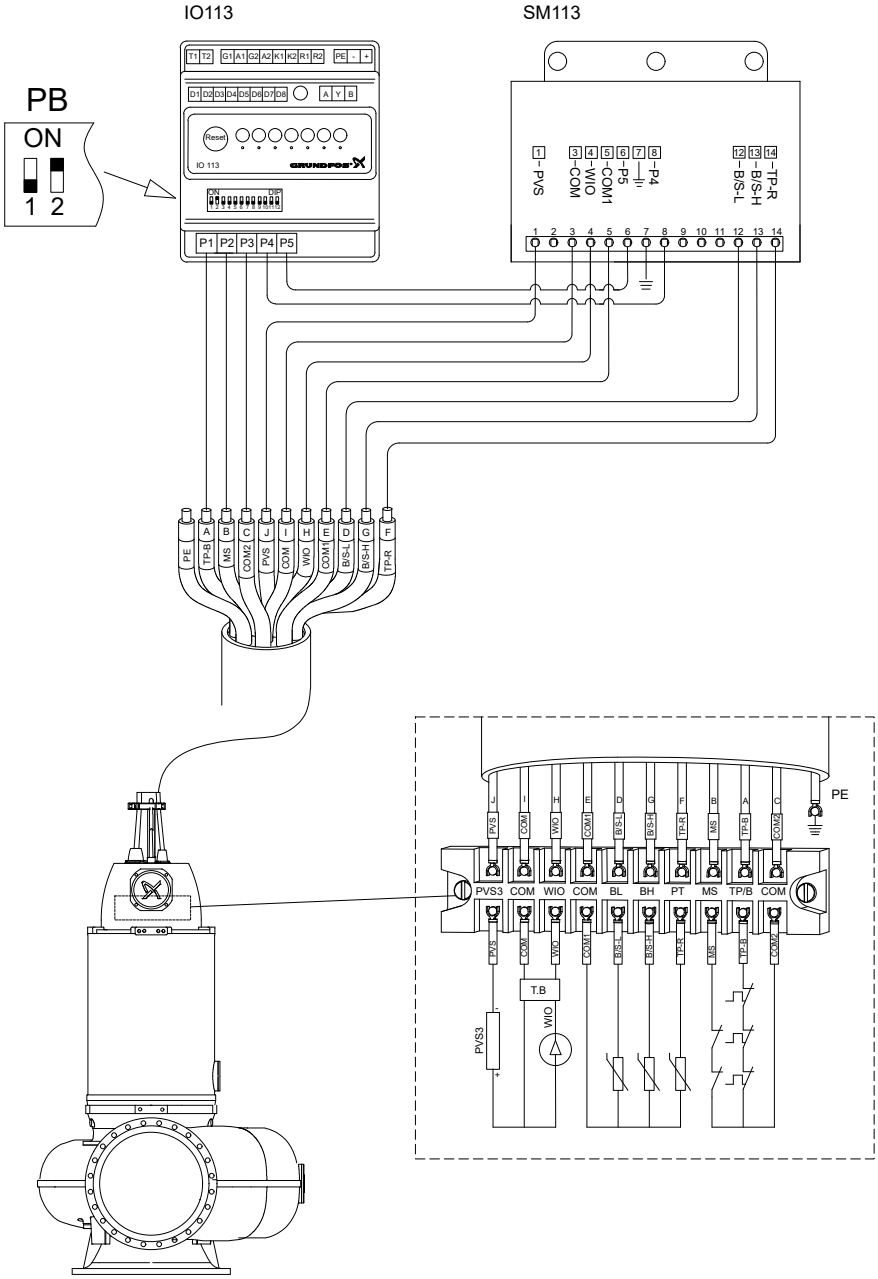

Wiring diagram of IO113 and SM113 (Sensor version B) with sensor options

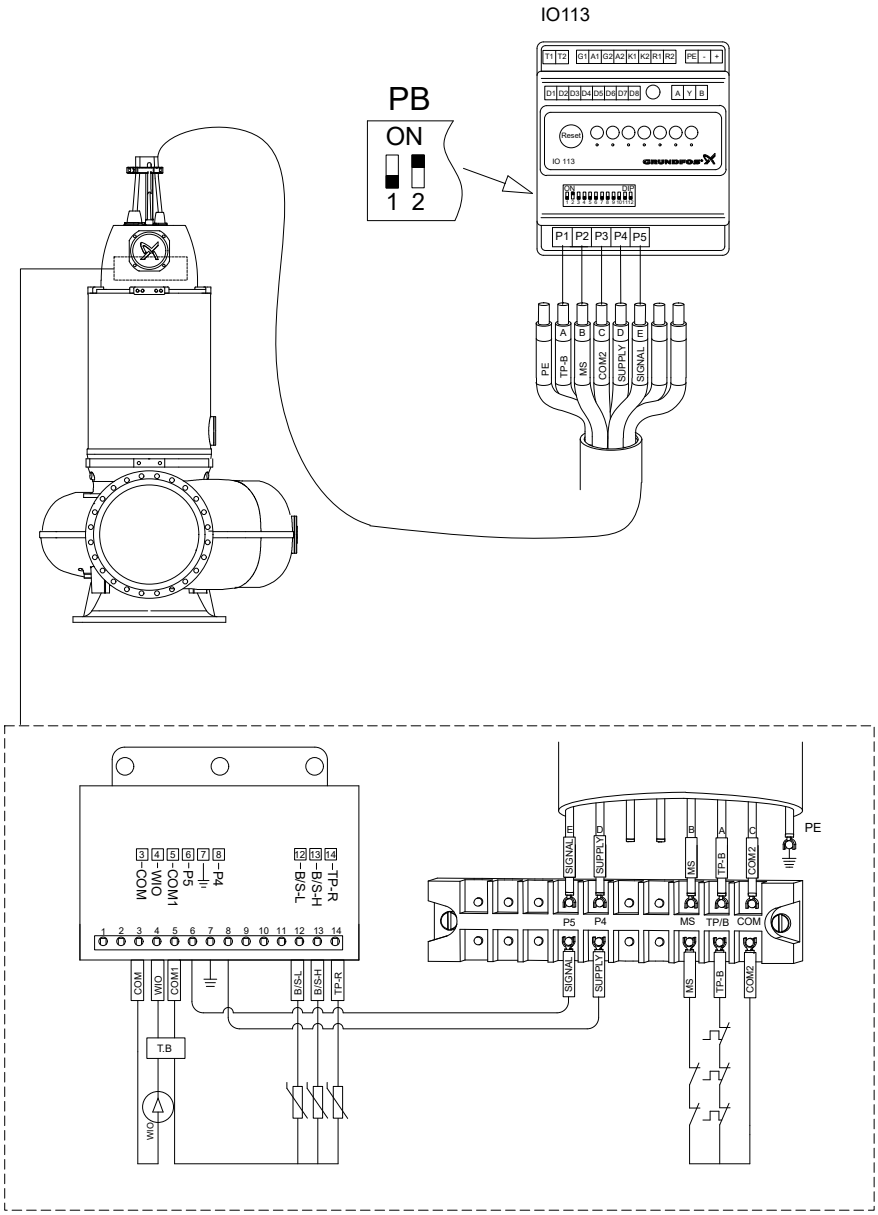

TM088850

Wiring diagram of IO113 and SM113 (Sensor version A)

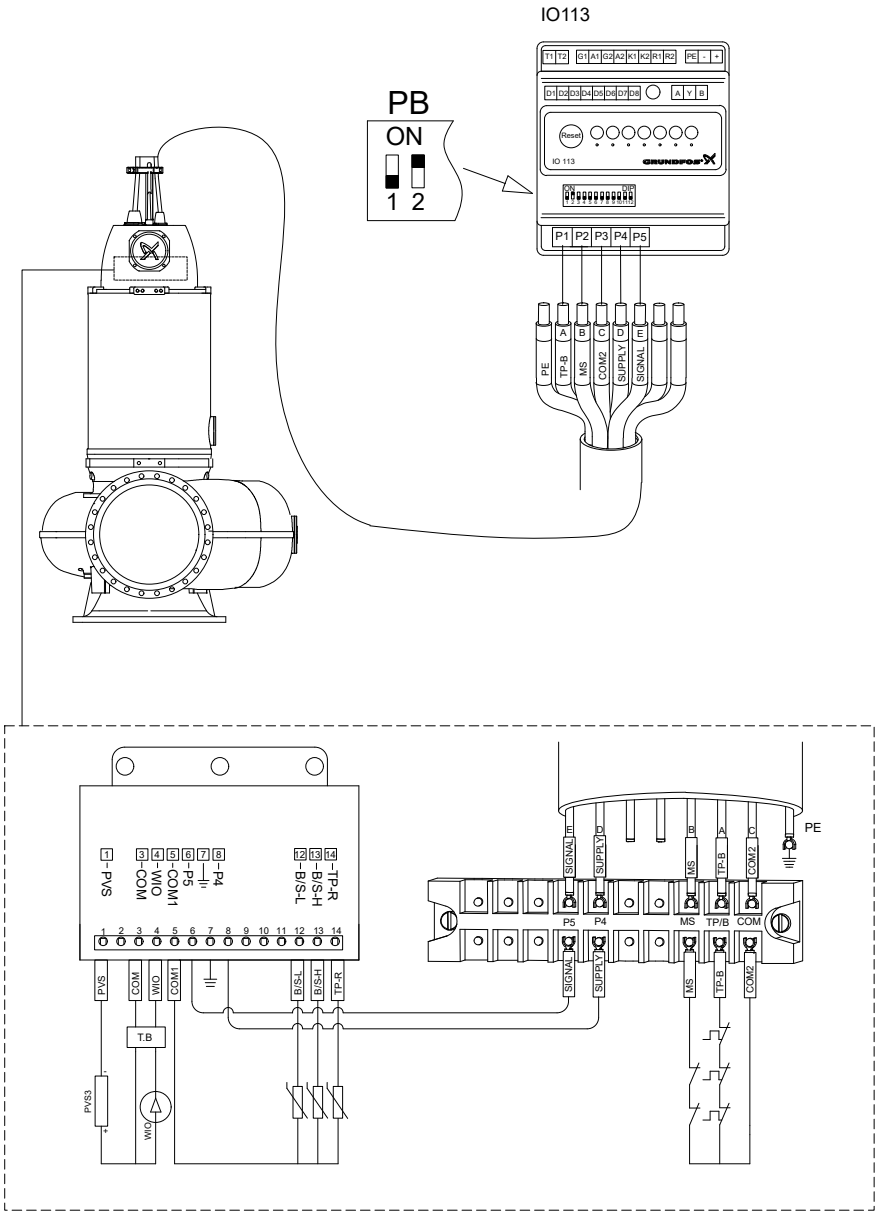

TM088851

Wiring diagram of IO113 and SM113 (Sensor version B) with sensor options

5.6 Frequency converter operation

TM084173

In principle, all three-phase motors can be connected to a frequency converter.

However, frequency converter operation will often expose the motor insulation system to a heavier load and cause the motor to be more noisy than usual due to eddy currents caused by voltage peaks.

In addition, large motors driven via a frequency converter will be loaded by bearing currents.

For frequency converter operation, observe the following:

- The thermal protection of the motor must be connected.
- Peak voltage and dU/dt must be in accordance with the table below. The values stated are maximum values supplied to the motor terminals. The cable influence has not been taken into account. See the frequency converter data sheet regarding the actual values and the cable influence on the peak voltage and dU/dt.
- Set the frequency converter U/f ratio according to the motor data.
- Local regulations/standards must be fulfilled.
- Before installing a frequency converter, calculate the lowest allowable frequency in the installation in order to avoid zero flow.
- Do not reduce the motor speed to less than 70 % (35 Hz) of rated speed.
- Keep the flow velocity above 1 m/sec.
- Let the pump run at rated speed at least once a day in order to prevent sedimentation in the piping system.
- Do not exceed the frequency indicated on the nameplate. In this case there is risk of motor overload.
- Keep the motor cable as short as possible. The peak voltage will increase with the length of the motor cable. See data sheet for the frequency converter used.
- Use input and output filters on the frequency converter. See data sheet for the frequency converter used.
- Use screened motor cable if there is a risk that electrical noise can disturb other electrical equipment. See data sheet for the frequency converter used.

When operating the pump by a frequency converter, consider the following:

- The locked-rotor torque can be lower depending on the type of the frequency converter.
- The noise level may increase. See the installation and operating instructions for the selected frequency converter.

Maximum repetitive peak voltage [V]	Maximum dU/dt U_N 400 V [V/µ sec.]
850	2000

! Frequency converter use may reduce the lifespan of the bearings and the shaft seal, depending on the operating mode and other circumstances.

For more information about the frequency converter operation, see the data sheet and the installation and operating instructions for the selected frequency converter.

5.7 Cable data

The cables are 10 m long as standard. Other cable lengths are available on request.

The followings are required for cables:

- Ambient temperature must be between -20 and +40 °C.
- Conductor must be stranded plain copper class 5 (IEC 60228). Its maximum temperature must be 90 °C.
- Insulation must be extruded EP rubber.
- Sheath must be extruded black rubber.

Power cable

The power cable is of the 0.6/1KV PNCT-S (screened) type.

Cable type [mm^2]	Outer cable diameter [mm]	Weight [kg/m]	Bending radius [cm]
4x70	49-55	5.2	78
4x95	53-59	5.9	84
4x120	62-68	7.8	97.5
4x150	66-72	9.5	103.5

Control cable

The control cable is of the screened 0.6/1KV PNCT-S (non-combined) type.

Cable type [mm^2]	Outer cable diameter [mm]	Weight [kg/m]	Bending radius [cm]
11x2.5	21.5-24.5	0.75	34.5

6. Startup

DANGER
Electric shock
Death or serious personal injury
- Make sure the pump is grounded.

Pumps in dry installation must be vented.

Before the first startup and after a long standstill period, make sure that the pump is filled with the pumped liquid.

Make sure that the pump is filled with the pumped liquid.
Dry-running is not allowed.

In case of abnormal noise or vibrations, stop the pump immediately. Do not restart the pump until the cause of the fault is identified and eliminated.

Proceed as follows:

1. Remove the fuses or switch off the main switch.
2. Check the oil level in the oil chamber.
3. Check if the impeller can rotate freely.
4. Check if monitoring units, if used, are operating.
5. If fitted, open the isolation valves.
6. In case of sewage pumps with cooling jacket for submerged installation, make sure the pumps is properly connected to the auto coupling.
7. In case of sewage pumps with cooling jacket for vertical, or horizontal dry installation, makes sure there is liquid in the pit and the pump housing and cooling jacket are filled with water. Open the air vent valve before, or during startup until water comes out of the valve. Then close the valve.
8. In case of sewage pumps with cooling jacket for submerged installation, the air vent valve must be open during operation. Check the setting of the level switches.
9. Start the pump, and check the operation for abnormal noise or vibrations.
10. After startup, the actual pump duty point must be established. Make sure the operating conditions are met.

Always operate the pump in accordance with established routines and perform scheduled checks of monitoring equipment and accessories. Make sure that the pump and equipment settings cannot be changed by unauthorised persons.

6.1 Direction of rotation check

The pump may only be started for a short period without being submerged for checking the direction of rotation.

A label indicates the correct direction of rotation on the pump housing.

In case of sewage pumps with cooling jacket for submerged installation, check the direction of jerk at starting the pump. If it jerks counter-clockwise, the direction of rotation is correct.

In case of sewage pumps with cooling jacket for vertical, or horizontal dry installation, check the duty point.

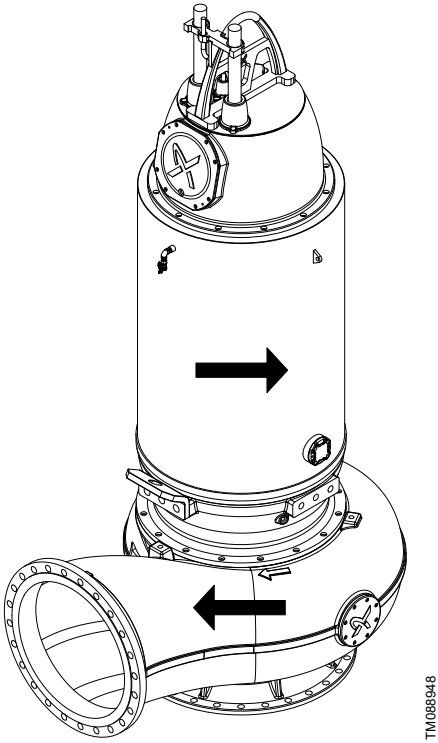

Direction of jerk and rotation

7. Storage

During storage, the pump must be protected against moisture and heat.

After a period of storage, inspect the pump before putting it into operation. Make sure that the impeller can rotate freely. Pay attention to the condition of the shaft seals, O-rings and the cable entries.

Do not store the product in direct sunlight.

Storage temperature is -20 °C to +55 °C. A maximum of 70 °C is allowed for short periods, not exceeding 24 hours, according to EN 60204-1.

Do not remove the cable-end protectors until the cables are installed to protect them against moisture.

Make sure the cooling jacket is empty before storing the pump.

If the pump is being stored for more than a month, turn the impeller at least every month to prevent the seal faces of the lower mechanical shaft seal from seizing up.

Avoiding this may cause damage to the shaft seal and motor bearings when the pump is started.

If the impeller cannot be turned, contact an authorised service workshop.

WARNING
Crushing hazard
Death or serious personal injury

- Do not turn the impeller by hand. Always use an appropriate tool.

On pumps fitted with guide vane, be careful not to damage the guide vane when turning the impeller.

8. Service and maintenance

WARNING
Crushing hazard
Death or serious personal injury

- Always support the pump using lifting chains or place it in horizontal position to secure stability.

DANGER
Electric shock
Death or serious personal injury

- Before starting any work on the product, make sure that the power supply is switched off and it cannot be switched on unintentionally.

DANGER
Electric shock
Death or serious personal injury

- Make sure the pump is grounded.

Maintenance and service must be carried out in an authorized service workshop by qualified persons.

Make sure to use only original service parts from the manufacturer to ensure correct dimension. The bolts used in motor must be class A2-70 according to EN/ISO 4762.

A major overhaul is required in every third year.

Operation inspection is required twice a year.

Before carrying out maintenance and service, make sure that the pump is thoroughly flushed with clean water. Rinse the pump parts after dismantling.

Frequency converter use may reduce the lifespan of the bearings and the shaft seal, depending on the operating mode and other circumstances.

Check the following:

- Power consumption
- Oil level.

When the pump is new or after replacement of the shaft seals, check the motor liquid level and its water content after one week of operation. If the motor liquid level has dropped, the shaft seal may be defective.

Disposal of the motor liquid must comply with local regulations.

If the pump vibrates at an abnormal level, do not restart the pump until the cause of the fault have been identified and removed.

8.1 Piping

Make sure the pipes, valves, and other peripheral equipment are intact.

8.2 Pump parts

Check the suction and volute casing for possible wear, and replace defective parts.

8.3 Ball bearings

Check the shaft for noisy or heavy operation, turn the shaft by hand. Replace defective ball bearings.

A general overhaul of the pump is usually required in case of defective ball bearings or poor motor function. This work must be carried out by an authorised service workshop.

When the pump is new or after a shaft seal replacement, inspect operation after a week. Regular inspection and preventive maintenance ensures more reliable operation.

Replace the ball bearings at least every 25.000 operating hours.

8.4 Cooling jacket

Check the cooling jacket and coolant path at least in every 6 month according to condition of the site and pumped liquid.

8.5 Visual check

Check the following:

- Look for cracks or other external damage
- Check if the lifting bracket and lifting chain is damaged or corroded
- Check if the motor cable is damaged or bent
- Check if cables are properly connected to the motor top cover
- Check if screws are not loose
- Check if the cooling jacket path is clean by opening the inspection cover on the cooling jacket.

8.6 Impeller clearance inspection

When the clearance between the impeller and the wear ring exceeds 2 mm, replace the wear ring.

For more information, contact Grundfos or the nearest service workshop.

8.7 Oil check and change

When the pump is new or after a shaft seal replacement, check the oil lever after a month of operation. Change the oil if it contains water.

If the pump is fitted with WIO sensor, it is not necessary to check the oil level.

CAUTION
Pressurised system
Minor or moderate personal injury

- When loosing the screw of the oil chamber, note that pressure may have built up in the chamber. Do not remove the screw until the pressure has been fully relieved.
- Cover the screw with a rag to avoid spillage.

Completely pump out the used oil making sure that the removal tube goes all the way to the bottom of the oil chamber. For complete drainage, the pump must be in horizontal position. After refilling, tighten the oil plug with 180 Nm torque in case of M16 oil plug, or 440 Nm torque in case of M22 oil plug.

Dispose of the used oil according to local regulations.

8.8 Cable entry check

Check the following:

- Check if cable clamps are tight
- Check if cable entry is tight
- Makes sure the sealing sleeve's and washer's diameter match the cables'

- Make sure cables cannot move freely during operation.

In case of the cables are damaged, make sure to change them.

8.9 Insulation resistance check

The IO 113 measures the insulation resistance between a stator winding and earth:

- If resistance is higher than 10 MΩ: OK
- If resistance is 1-10 MΩ: warning
- If resistance is less than 1 MΩ: alarm.

Use an insulation resistance tester set to 1000 VDC. Check phase-to-phase and phase-to-earth resistance. Test result must be over 100 MΩ. Check the power cable insulation resistance according to the starting method of the pump.

8.10 Spare parts

Replace damaged motor parts by new and approved ones. For information, contact Grundfos.

Do not recondition motor parts by machining, re-tapping or welding.

8.11 Contaminated pumps

The product is classified as contaminated, if it is used for contagious or toxic liquid.

CAUTION
Biological hazard
Minor or moderate personal injury
- Flush the pump thoroughly with clean water and rinse the pump parts after dismantling.

Before returning the product for service, contact Grundfos with details about the pumped liquid. Otherwise, Grundfos can deny to service the product.

Any application for service must include details about the pumped liquid.

Clean the product in the best possible way before returning it.

9. Troubleshooting

DANGER
Electric shock
Death or serious personal injury
- Before starting any work on the product, make sure that the power supply is switched off and it cannot be switched on unintentionally.

DANGER
Electric shock
Death or serious personal injury
- The pump must be grounded.

Before diagnosing any fault, make sure that all rotating parts have stopped moving.

9.1 Pump does not start or stops without visible cause.

Cause	Remedy
Pump does not start or stops without visible cause.	Re-establish power supply. Start the pump manually and check contactor operation.
Moisture in the stator housing or in terminal box. The moisture switch interrupts the supply voltage.	Contact an authorized service workshop.
Water-in-oil sensor not covered in oil. The sensor interrupts the supply voltage.	Contact an authorized service workshop.

9.2 Pump does not start or stop

The controller indicates a disconnected motor-protective circuit breaker or protection equipment.

Cause	Remedy
A phase is missing.	Re-establish all phases.
The pump is overloaded.	Find and remedy the cause.
The impeller is jammed.	Clean the impeller.
The motor-protective circuit breaker is not set correctly.	Set according to rated current.
Insufficient motor cooling due to malfunctioned thermal switches.	Re-establish motor cooling.
Too high density of pumped liquid.	Dilute the liquid.
Cooling jacket path is blocked by solids in the pumped liquid.	Clean the cooling jacket.

Cause	Remedy
Moisture switch is malfunctioned in the motor.	Contact an authorized service workshop.
Motor cable is defective.	Contact an authorized service workshop.
Voltage is fluctuating.	Re-establish correct voltage supply. Permissible deviation is ± 10 %.

9.3 Pump runs, but does not deliver the flow rate

Cause	Remedy
Wrong direction of rotation.	Interchange two phases to the motor.
The impeller is loose or worn.	Adjust the impeller clearance. If the impeller must be replaced, contact an authorized service workshop.
The pump or pipework is clogged.	Clean the pump or pipework.
Pump head is too high.	Measure the differential pressure and compare the value with the pump curve. Remove the blockage in the outlet pipe.
Valves are closed or blocked. The non-return valve is not operating.	Clean or replace the valves.
There is air in the pump or inlet pipe.	Vent the pump and inlet pipe. Raise the stop level in the pit.
The pumped liquid is too dense.	Dilute the pumped liquid.
The pump is not connected to the auto coupling properly.	Pump the liquid level down in the pit. Lift the pump out and place it on the auto coupling again.
There is a leakage in the pipes.	Repair the pipes.

9.4 Pump starts, but stops immediately

Cause	Remedy
Clogged pump causes motor-protective circuit breaker to malfunction.	Clean the pump.
The motoer overheated therefore thermal switches malfunction.	Let the pump cool down, then clean it.
The level switch is not set correctly or malfunctions.	Clean, set correctly, or replace the level switch.

9.5 The pump is vibrating or too loud

Cause	Remedy
The pump is partly clogged.	Clean the pump.
Wrong direction of rotation.	Interchange two phases to the motor.
The pump operates outside of specified operating range.	Re-establish proper operating conditions.
The pump is defective.	Repair the pump or contact an authorized workshop, if necessary.
The pump is not connected to the auto coupling properly.	Pump the liquid level down in the pit. Lift the pump out and place it on the auto coupling again.
The pump cavitates.	Clean the inlet pipe.
The base stand, auto coupling, ring stand, or guide rails are not installed properly.	Install the accesories properly.

9.6 There is water in the oil

Cause	Remedy
The lower mechanical seal is leaking.	Contact an authorized service workshop.

9.7 The oil level is low

Cause	Remedy
The upper mechanical seal is leaking.	Contact an authorized service workshop.

10. Technical data

10.1 PH value

All pumps can be used for pumping liquids with a pH value of 4-10.

10.2 Density and viscosity of the pumped liquid

Density: 1000 kg/m^3.

Kinematic viscosity: 1 mm^2/s (1 cSt).

When pumping liquids with a density and/or a kinematic viscosity higher than the values stated above, use motors with correspondingly higher outputs.

10.3 Flow rate

Keep a minimum flow rate to avoid sedimentation in the pipe network. Recommended flow rates:

- in vertical pipes: 0.7 m/s.
- in horizontal pipes: 1.0 m/s.

10.4 Ambient temperature

The allowed ambient temperature is 0-40 °C.

In special situations, when the motor is not fully loaded, the ambient temperature may be higher.

In this case, contact the nearest Grundfos company or service workshop.

10.5 Liquid temperature

The allowed liquid temperature is 0-40 °C.

In special situations, when the motor is not fully loaded, the ambient temperature may be higher.

In this case, contact the nearest Grundfos company or service workshop.

10.6 Operating mode

The pumps are designed for continuous operation with maximum number of starts:

- Pumps with 75-220 kW motors: maximum 10 starts per hour
- Pumps with 220 kW motors and above: maximum 6 starts per hour
- Maximum 5.000 starts per year.

10.7 Installation depth

Maximum 20 m below liquid level.

10.8 Solid size

The maximum solid size is 100-230 mm depending on impeller type.

10.9 Enclosure class

IP68.

10.10 Sound pressure

Use hearing protection when working nearby an installation in operation with a sound pressure level above 70 dB(A).

10.11 Electrical data

Voltage tolerances for the motor and the motor protection devices:

Component	Voltage	Tolerance
Motor	See the pump nameplate	± 10 %
Thermal switches	Maximum 240 V	± 10 %
Thermistors	2.5 - 7.5 V	-
Moisture switches	Maximum 240 V	-
Other sensors (optional)	Maximum 14 VDC	± 1 V
SM 113 (optional)	Maximum 14 VDC	± 1 V

11. Disposing of the product

This product or parts of it must be disposed of in an environmentally sound way.

1. Use the public or private waste collection service.
2. If this is not possible, contact the nearest Grundfos company or service workshop.

The crossed-out wheelie bin symbol on a product means that it must be disposed of separately from household waste. When a product marked with this symbol reaches its end of life, take it to a collection point designated by the local waste disposal authorities. The separate collection and recycling of such products will help protect the environment and human health.

See also end-of-life information at *www.grundfos.com/product-recycling*.

Argentina
Bombas GRUNDFOS de Argentina S.A.
Ruta Panamericana km. 37.500industin
1619 - Garín Pcia. de B.A.
Tel.: +54-3327 414 444
Fax: +54-3327 45 3190

Australia
GRUNDFOS Pumps Pty. Ltd.
P.O. Box 2040
Regency Park
South Australia 5942
Tel.: +61-8-8461-4611
Fax: +61-8-8340-0155

Austria
GRUNDFOS Pumpen Vertrieb
Ges.m.b.H.
Grundfosstraße 2
A-5082 Grödig/Salzburg
Tel.: +43-6246-883-0
Fax: +43-6246-883-30

Belgium
N.V. GRUNDFOS Bellux S.A.
Boomsesteenweg 81-83
B-2630 Aartselaar
Tel.: +32-3-870 7300
Fax: +32-3-870 7301

Bosnia and Herzegovina
GRUNDFOS Sarajevo
Zmaja od Bosne 7-7A
BiH-71000 Sarajevo
Tel.: +387 33 592 480
Fax: +387 33 590 465
www.ba.grundfos.com
E-mail: grundfos@bih.net.ba

Brazil
BOMBAS GRUNDFOS DO BRASIL
Av. Humberto de Alencar Castelo
Branco, 630
CEP 09850 - 300
São Bernardo do Campo - SP
Tel.: +55-11 4393 5533
Fax: +55-11 4343 5015

Bulgaria
Grundfos Bulgaria EOOD
Slatina District
Iztochna Tangenta street no. 100
BG - 1592 Sofia
Tel.: +359 2 49 22 200
Fax: +359 2 49 22 201
E-mail: bulgaria@grundfos.bg

Canada
GRUNDFOS Canada inc.
2941 Brighton Road
Oakville, Ontario
L6H 6C9
Tel.: +1-905 829 9533
Fax: +1-905 829 9512

China
GRUNDFOS Pumps (Shanghai) Co. Ltd.
10F The Hub, No. 33 Suhong Road
Minhang District
Shanghai 201106 PRC
Tel.: +86 21 612 252 22
Fax: +86 21 612 253 33

Colombia
GRUNDFOS Colombia S.A.S.
Km 1.5 vía Siberia-Cota Conj. Potrero
Chico,
Parque Empresarial Arcos de Cota Bod.
1A.
Cota, Cundinamarca
Tel.: +57(1)-2913444
Fax: +57(1)-8764586

Croatia
GRUNDFOS CROATIA d.o.o.
Buzinski prilaz 38, Buzin
HR-10010 Zagreb
Tel.: +385 1 6595 400
Fax: +385 1 6595 499
www.hr.grundfos.com

Czech Republic
GRUNDFOS Sales Czechia and Slovakia
s.r.o.
Čajkovského 21
779 00 Olomouc
Tel.: +420-585-716 111

Denmark
GRUNDFOS DK A/S
Martin Bachs Vej 3
DK-8850 Bjerringbro
Tel.: +45-87 50 50 50
Fax: +45-87 50 51 51
E-mail: info_GDK@grundfos.com
www.grundfos.com/DK

Estonia
GRUNDFOS Pumps Eesti OÜ
Peterburi tee 92G
11415 Tallinn
Tel.: + 372 606 1690
Fax: + 372 606 1691

Finland
OY GRUNDFOS Pumput AB
Trukkikuja 1
FI-01360 Vantaa
Tel.: +358-(0) 207 889 500

France
Pompes GRUNDFOS Distribution S.A.
Parc d'Activités de Chesnes
57, rue de Malacombe
F-38290 St. Quentin Fallavier (Lyon)
Tel.: +33-4 74 82 15 15
Fax: +33-4 74 94 10 51

Germany
GRUNDFOS GMBH
Schlüterstr. 33
40699 Erkrath
Tel.: +49-(0) 211 929 69-0
Fax: +49-(0) 211 929 69-3799
E-mail: infoservice@grundfos.de
Service in Deutschland:
kundendienst@grundfos.de

Greece
GRUNDFOS Hellas A.E.B.E.
20th km. Athinon-Markopoulou Av.
P.O. Box 71
GR-19002 Peania
Tel.: +0030-210-66 83 400
Fax: +0030-210-66 46 273

Hong Kong
GRUNDFOS Pumps (Hong Kong) Ltd.
Unit 1, Ground floor, Siu Wai industrial
Centre
29-33 Wing Hong Street & 68 King Lam
Street, Cheung Sha Wan
Kowloon
Tel.: +852-27861706 / 27861741
Fax: +852-27858664

Hungary
GRUNDFOS South East Europe Kft.
Tópark u. 8
H-2045 Törökbálint
Tel.: +36-23 511 110
Fax: +36-23 511 111

India
GRUNDFOS Pumps India Private
Limited
118 Old Mahabalipuram Road
Thoraipakkam
Chennai 600 097
Tel.: +91-44 2496 6800

Indonesia
PT GRUNDFOS Pompa
Graha intirub Lt. 2 & 3
Jln. Cililitan Besar No.454. Makasar,
Jakarta Timur
ID-Jakarta 13650
Tel.: +62 21-469-51900
Fax: +62 21-460 6910 / 460 6901

Ireland
GRUNDFOS (Ireland) Ltd.
Unit A, Merrywell Business Park
Ballymount Road Lower
Dublin 12
Tel.: +353-1-4089 800
Fax: +353-1-4089 830

Italy
GRUNDFOS Pompe Italia S.r.l.
Via Gran Sasso 4
I-20060 Truccazzano (Milano)
Tel.: +39-02-95838112
Fax: +39-02-95309290 / 95838461

Japan
GRUNDFOS Pumps K.K.
1-2-3, Shin-Miyakoda, Kita-ku
Hamamatsu
431-2103 Japan
Tel.: +81 53 428 4760
Fax: +81 53 428 5005

Kazakhstan
Grundfos Kazakhstan LLP
7' Kyz-Zhibek Str., Kok-Tobe micr.
KZ-050020 Almaty Kazakhstan
Tel.: +7 (727) 227-98-55/56

Korea
GRUNDFOS Pumps Korea Ltd.
6th Floor, Aju Building 679-5
Yeoksam-dong, Kangnam-ku, 135-916
Seoul, Korea
Tel.: +82-2-5317 600
Fax: +82-2-5633 725

Latvia
SIA GRUNDFOS Pumps Latvia
Deglava biznesa centrs
Augusta Deglava ielā 60
LV-1035, Rīga,
Tel.: + 371 714 9640, 7 149 641
Fax: + 371 914 9646

Lithuania
GRUNDFOS Pumps UAB
Smolensko g. 6
LT-03201 Vilnius
Tel.: + 370 52 395 430
Fax: + 370 52 395 431

Malaysia
GRUNDFOS Pumps Sdn. Bhd.
7 Jalan Peguam U1/25
Glenmarie industrial Park
40150 Shah Alam, Selangor
Tel.: +60-3-5569 2922
Fax: +60-3-5569 2866

Mexico
Bombas GRUNDFOS de México
S.A. de C.V.
Boulevard TLC No. 15
Parque industrial Stiva Aeropuerto
Apodaca, N.L. 66600
Tel.: +52-81-8144 4000
Fax: +52-81-8144 4010

Netherlands
GRUNDFOS Netherlands
Veluwezoom 35
1326 AE Almere
Postbus 22015
1302 CA ALMERE
Tel.: +31-88-478 6336
Fax: +31-88-478 6332
E-mail: info_gnl@grundfos.com

New Zealand
GRUNDFOS Pumps NZ Ltd.
17 Beatrice Tinsley Crescent
North Harbour Industrial Estate
Albany, Auckland
Tel.: +64-9-415 3240
Fax: +64-9-415 3250

Norway
GRUNDFOS Pumper A/S
Strømsveien 344
Postboks 235, Leirdal
N-1011 Oslo
Tel.: +47-22 90 47 00
Fax: +47-22 32 21 50

Poland
GRUNDFOS Pompy Sp. z o.o.
ul. Klonowa 23
Baranowo k. Poznania
PL-62-081 Przeźmierowo
Tel.: (+48-61) 650 13 00
Fax: (+48-61) 650 13 50

Portugal
Bombas GRUNDFOS Portugal, S.A.
Rua Calvet de Magalhães, 241
Apartado 1079
P-2770-153 Paço de Arcos
Tel.: +351-21-440 76 00
Fax: +351-21-440 76 90

Romania
GRUNDFOS Pompe România SRL
S-PARK BUSINESS CENTER, Clădirea A2, etaj 2
Str. Tipografilor, Nr. 11-15, Sector 1, Cod 013714
Bucuresti, Romania
Tel.: 004 021 2004 100
E-mail: romania@grundfos.ro

Serbia
Grundfos Srbija d.o.o.
Omladinskih brigada 90b
11070 Novi Beograd
Tel.: +381 11 2258 740
Fax: +381 11 2281 769
www.rs.grundfos.com

Singapore
GRUNDFOS (Singapore) Pte. Ltd.
25 Jalan Tukang
Singapore 619264
Tel.: +65-6681 9688
Faxax: +65-6681 9689

Slovakia
GRUNDFOS s.r.o.
Prievozská 4D 821 09 BRATISLAVA
Tel.: +421 2 5020 1426
sk.grundfos.com

Slovenia
GRUNDFOS LJUBLJANA, d.o.o.
Leskoškova 9e, 1122 Ljubljana
Tel.: +386 (0) 1 568 06 10
Fax: +386 (0)1 568 06 19
E-mail: tehnika-si@grundfos.com

South Africa
GRUNDFOS (PTY) LTD
16 Lascelles Drive, Meadowbrook Estate
1609 Germiston, Johannesburg
Tel.: (+27) 10 248 6000
Fax: (+27) 10 248 6002
E-mail: lgradidge@grundfos.com

Spain
Bombas GRUNDFOS España S.A.
Camino de la Fuentecilla, s/n
E-28110 Algete (Madrid)
Tel.: +34-91-848 8800
Fax: +34-91-628 0465

Sweden
GRUNDFOS AB
Box 333 (Lunnagårdsgatan 6)
431 24 Mölndal
Tel.: +46 31 332 23 000
Fax: +46 31 331 94 60

Switzerland
GRUNDFOS Pumpen AG
Bruggacherstrasse 10
CH-8117 Fällanden/ZH
Tel.: +41-44-806 8111
Fax: +41-44-806 8115

Taiwan
GRUNDFOS Pumps (Taiwan) Ltd.
7 Floor, 219 Min-Chuan Road
Taichung, Taiwan, R.O.C.
Tel.: +886-4-2305 0868
Fax: +886-4-2305 0878

Thailand
GRUNDFOS (Thailand) Ltd.
92 Chaloem Phrakiat Rama 9 Road
Dokmai, Pravej, Bangkok 10250
Tel.: +66-2-725 8999
Fax: +66-2-725 8998

Turkey
GRUNDFOS POMPA San. ve Tic. Ltd. Sti.
Gebze Organize Sanayi Bölgesi
Ihsan dede Caddesi
2. yol 200. Sokak No. 204
41490 Gebze/ Kocaeli
Tel.: +90 - 262-679 7979
Fax: +90 - 262-679 7905
E-mail: satis@grundfos.com

Ukraine
ТОВ "ГРУНДФОС УКРАЇНА"
Бізнес Центр Європа
Столичне шосе, 103
м. Київ, 03131, Україна
Tel.: (+38 044) 237 04 00
Fax: (+38 044) 237 04 01
E-mail: ukraine@grundfos.com

United Arab Emirates
GRUNDFOS Gulf Distribution
P.O. Box 16768
Jebel Ali Free Zone, Dubai
Tel.: +971 4 8815 166
Fax: +971 4 8815 136

United Kingdom
GRUNDFOS Pumps Ltd.
Grovebury Road
Leighton Buzzard/Beds. LU7 4TL
Tel.: +44-1525-850000
Fax: +44-1525-850011

U.S.A.
Global Headquarters for WU
856 Koomey Road
Brookshire, Texas 77423 USA
Phone: +1-630-236-5500

Uzbekistan
Grundfos Tashkent, Uzbekistan
The Representative Office of Grundfos Kazakhstan in Uzbekistan
38a, Oybek street, Tashkent
Tel.: (+998) 71 150 3290 / 71 150 3291
Fax: (+998) 71 150 3292

Trademarks displayed in this material, including but not limited to Grundfos and the Grundfos logo, are registered trademarks owned by The Grundfos Group. © 2025 Grundfos Holding A/S, all rights reserved.

93364672 **03.2025**

ECM: 1418779