Data booklet

MTS, MTSE

50/60 Hz

Model K screw pumps

GRUNDFOS

Table of contents

1. Introduction 3
MTS Model K pumps 3
When to select an E-pump 3
MTSE pumps with built-in frequency converter 3
Applications 4

2. Features and benefits 5
Pump 5
Motors for MTS pumps 5
Motors for MTSE pumps 6
Terminal box positions 7
Overload protection 7

3. Performance range 8
MTS, 50 Hz 8
MTS, 60 Hz 9
MTSE, 50/60 Hz 10

4. Product range. 12

5. Identification. 13
Type key 13

6. Construction. 14
MTS 25 and 32 14
Material specification 14

7. Operating conditions 15
Pumped liquids 15
Control of MTSE pumps 17
Installation 24

8. Performance curves and technical data . . . 26
How to read the curve charts 26
Guidelines to performance curves 26
MTS 25, 50 Hz 27
MTS 32, 50 Hz 30
MTS 25, 60 Hz 33
MTS 32, 60 Hz 36
MTSE 25, 3×380-500 V, 50/60 Hz 39
MTSE 32, 3×380-500 V, 50/60 Hz 47
MTSE 25, 3×200-240 V, 50/60 Hz 53
MTSE 32, 3×200-240 V, 50/60 Hz 61

9. Motor data 67
Mains-operated motors for MTS, 50 Hz 67
Mains-operated motors for MTS, 60 Hz 69
Mains-operated motors for MTSE, 50/60 Hz 70

10. Accessories 71
CIM (Communication Interface Modules) 71
Remote controls 71
Counterflanges for outlet port 72
Counterflanges for inlet port 72
Pressure-relief valves 73

11. Grundfos Product Center 75

12. Document quality feedback. 76

1. Introduction

MTS Model K pumps

TM087801

MTS pump in cutaway view

MTS pumps are screw pumps designed for pumping cooling lubricants and cutting oils for machine tool applications.

Depending on pump type, it can be mounted on top of tanks with the pump immersed in the pumped liquid, or the pump can be dry-installed to the tank with pipe connections. See the section on pump designs.

The pumps come in various sizes and screw pitches to provide the flow rate, pressure and length required.

The pumps consist of a motor and a pump unit. The motor is a Grundfos standard MG motor designed in accordance with EN standards.

The pump unit consists of optimized hydraulics, various types of connections, a motor stool and various other parts.

Related information

Pump designs

When to select an E-pump

Select an E-pump if the following is required:

- controlled operation, as the consumption fluctuates
- constant pressure
- communication with the pump.

Adaptation of performance through frequency-controlled speed control offers obvious benefits, such as the following:

- energy savings
- increased comfort
- control and monitoring of the pump performance.

MTSE pumps with built-in frequency converter

TM092679

MTSE pump with an E-motor

MTSE pumps are MTS pumps with an E-motor, that is, a motor with built-in frequency converter. A frequency converter enables continuously variable motor speed control, allowing the pump to operate at any duty point. The motors of the MTSE pumps are Grundfos MGE motors designed in compliance with EN standards.

MTSE pumps are ideal for machining centers where different processes and tools lead to changing flow and pressure requirements.

The MTSE pump offers the following features and benefits:

- energy saving
- low heat input into the cooling lubricant
- increased cooling efficiency
- better performance of the machining center
- simple integration with the machining center
- Safe Torque Off safety function.

Note that the product must be installed in a place with access control to prevent unauthorized access.

Applications

MTS pumps are an important part of modern metal machining centers, transfer lines, and grinding and deep-hole-drilling machines.

In metal working or process engineering, MTS pumps transfer well-, conditionally- or poorly- lubricating abrasive liquids, such as cutting, grinding and deep-hole-drilling oils, oil-in-water emulsions, and cooling lubricant solutions. The pumped liquid must not attack the materials.

Permissible cooling lubricants:

- Solutions (inorganic substances in water, organic and synthetic substances in water)
- emulsions (oil-in-water emulsion containing 2 to 20 % oil)
- cutting and grinding oils (without additives, with polar physically acting additives, with mildly acting, lubricating film forming additives, with polar and mildly acting additives, with active, chemical additives, with polar and active additives).

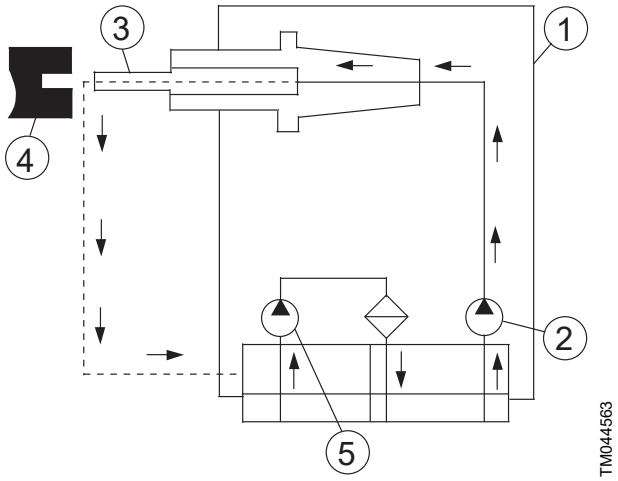

Schematic drawing

Pos.	Description
1	Machining centre
2	MTS high-pressure pump
3	Drilling tool
4	Work piece
5	Filter pump

Related information

List of pumped liquids

2. Features and benefits

Pump

The MTS Model K pump offers the following features and benefits:

- **compact design**
  - featuring an opening for ventilation, filling and emptying
  - tube ensuring visual inspection for leak detection
- **variable installation**
  - integrated installation flange
  - SAE-connection option on the pressure side above the container plate making possible a simplified installation of attachments
- **two types of inlet casings**
  - axial inlet option for tank-top installation
  - SAE-connection option at the side, 90°-rotatable, for dry installation
- **high efficiency**
  - screw spindles made of tool steel, specially hardened and precision-machined
  - labyrinth for effective pressure reduction
- **long service life**
  - single-part running casing made of grey cast iron, specially hardened and precision-machined
  - external main bearing
  - wear-resistant mechanical seal
  - screw spindles made of tool steel, specially hardened and precision-machined
- **good performance ratio**
  - various pump sizes and screw pitches for providing the required flow rate, pressure and length to achieve good performance ratio.

Motors for MTS pumps

The pumps are fitted with a fully enclosed, fan-cooled, 2-pole Grundfos standard MG motor with principal dimensions according to EN and IEC standards.

Electrical tolerances are compliant with EN 60034.

Electrical data

Mounting designation	B5/V1	
Insulation class	F	
Efficiency class, 50 Hz	MG motors: [1]	IE3
Efficiency class, 60 Hz	MG motors:	IE3
Enclosure class	IP55	
Supply voltage, 50 Hz (tolerance -10 % / +10 %)	P_2: 1.5 - 22 kW:	3 × 220-240D / 380-415Y V
	P_2: 7.5 - 22 kW:	3 × 380-415D / 660-690Y V
Supply voltage, 60 Hz (tolerance -10 % / +10 %)	P_2: 1.5 - 22 kW:	3 × 220-277D / 380-480Y V
		3 × 380-480D / 660-690Y V

On request	
Supply voltage, 50 Hz	3 × 200-220 / 346-380 V
Supply voltage, 60 Hz	3 × 200-230 / 346-400 V 3 × 208-230 / 460-480 V

1) IE4 motors are available on request.

On request, Grundfos MG motors are available with cURus approvals issued by the Underwriters Laboratories Inc. according to UL 1004 standard for electrical motors.

Ambient temperature

MG motors (1.5 - 22 kW): maximum 60 °C.

If the ambient temperature exceeds the above maximum value, or if the motor is located at or above 1000 metres above sea level, the motor output (P2) must be reduced due to the low density, and consequently low cooling effect, of the air. In such cases, it may be necessary to use a motor with a higher output.

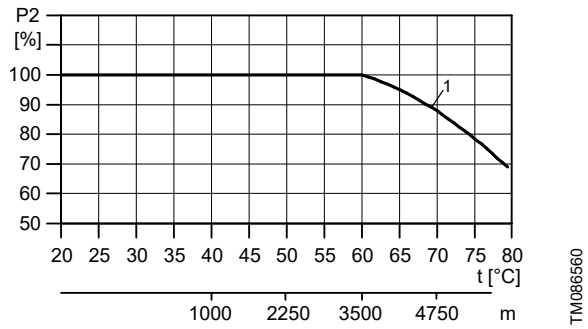

Relationship between motor output (P2) and ambient temperature or altitude

Pos.	Description
1	MG motors (1.5 - 22 kW)

Motor protection

Three-phase motors must be connected to a motor-protective circuit breaker in accordance with local regulations.

Three-phase Grundfos and Siemens motors from 3 kW and upwards have a built-in thermistor (PTC) in compliance with DIN 44082 (IEC 34-11: TP 211).

Maximum number of starts

Pump	Motor [kW]	Recommended max. number of starts per hour
MTS	1.5 - 2.2	250
	3-4	100
	5.5 - 11	50
	15-22	40

Sound pressure level

The MTS construction design allows gentle, even, virtually pulsation-free and low-noise pumping. The noise emission remains between 56 and 78 dB(A), and depends on

speed, pump size and installation. MTS pumps operate significantly quieter than rotary lobe and centrifugal pumps with comparable performance.

Measuring conditions:

Distance to the pump:	1 m
Operation:	Cavitation-free
Motor:	IEC standard motor
Tolerance:	± 3 dB

Size	Sound pressure level [dB]
32	< 78 dB(A)
25	< 78 dB(A)

The data are reference values.

The actual airborne sound level depends specifically on the installation conditions.

Motor [kW]	Max. sound pressure level [dB(A)] ISO 3743	
	50 Hz	60 Hz
1.5	55.5	59.8
2.2	55.5	59.8
3	55.3	59.8
4	58.7	63.6
5.5	58.8	63.6
7.5	60.3	65.1
11	60.5	65.1
15	60.6	65.2
18.5	60.7	65.3
22	64.4	69.1

The values apply only to MG motors.

The values for both 50 and 60 Hz have a tolerance of 3 dB(A) according to EN ISO 4871, which is not added to the values in these tables.

Motors for MTSE pumps

The pumps are fitted with a totally enclosed, fan-cooled, 2-pole Grundfos frequency-controlled MGE motor with principal dimensions in accordance with the EN standards.

Electrical tolerances comply with EN 60034. MTSE pumps from 2.2 to 22 kW are fitted with three-phase MGE motors as standard.

See the Grundfos Product Center at *http://product-selection.grundfos.com/.*

Electrical data

Mounting designation	B5/V1
Insulation class	F
Efficiency class	I5
Enclosure class	IP55
Supply voltage (-10 % / +10 %)	200-240 V; 380-500 V
Supply frequency	50/60 Hz

Maximum ambient temperature and altitude for Grundfos MGE motors

The table shows the maximum permissible ambient temperature at full load, and the maximum permissible installation altitude above sea level at full load.

Motor efficiency class: IE5

Motor power [kW]	Motor make	Phase	Max. ambient temperature [°C]	Max. altitude above sea level [m]
2.2 - 22	MGE	3	50 [2)]	1000

[2)] 3 × 200−240 V MGE motors are rated for a maximum ambient temperature of 40 °C.

Motor load for Grundfos MGE motors

MGE motors can be installed up to 3500 m above sea level.

Motors installed above the maximum installation altitude of 1000 m above sea level must not be fully loaded. Use the below curve to calculate the derated motor power.
If the required motor output exceeds the derated motor power, select an oversized motor.

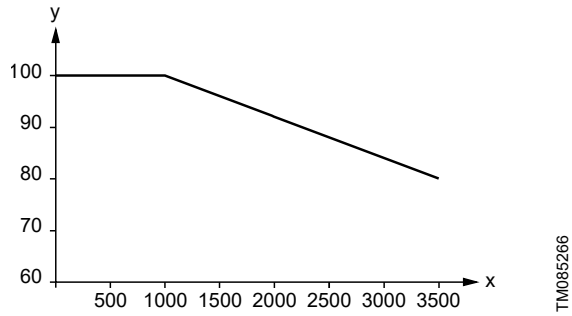

Derating of motor output power P2 % (y-axis) in relation to installation altitude above sea level in metres (x-axis)

Motor protection

MGE motors incorporate thermal protection against slow overload and blocking (IEC 34-11:TP 211).

Grundfos pumps with an MGE motor require no external motor protection.

Sound pressure level

Motor [kW]	Maximum sound pressure level [dB(A)] ISO 3743
	50/60 Hz
2.2	56.5
3	57
4	57
5.5	56.5
7.5	66.8
11	66.8
15	66.8
18.5	62.6
22	63.8

Terminal box positions

As standard, the pumps have their terminal box mounted in position 12 o'clock of the pump. However, other positions are possible.

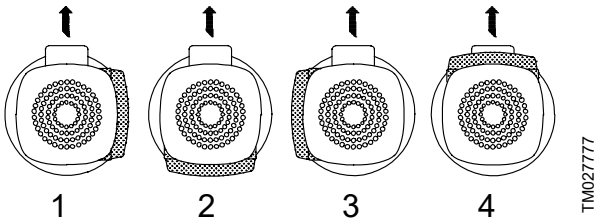

Terminal box positions

Pos.	Description
1	Position 3 o'clock
2	Position 6 o'clock
3	Position 9 o'clock
4	Position 12 o'clock (standard)

Overload protection

The pump has no pressure-relief valve. Thus overload protection must be provided in the control system, or with pressure relief.

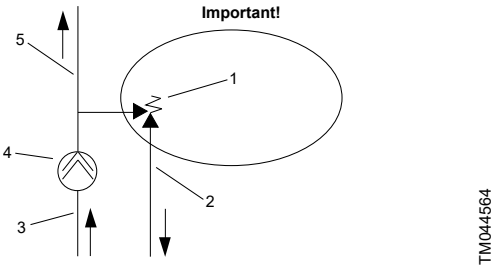

Overload protection

Pos.	Description
1	Pressure-relief valve
2	Backflow line to tank
3	Suction from tank
4	Pump
5	Pressure line to system

Related information

Pressure-relief valves

3. Performance range

MTS, 50 Hz

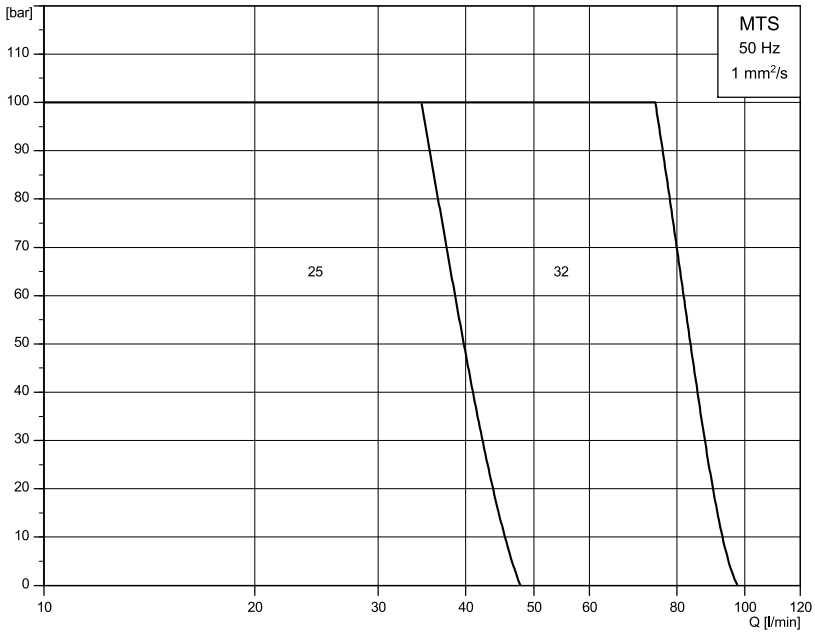

TM087169

Performance range - MTS, 50 Hz 1 mm^2 /s

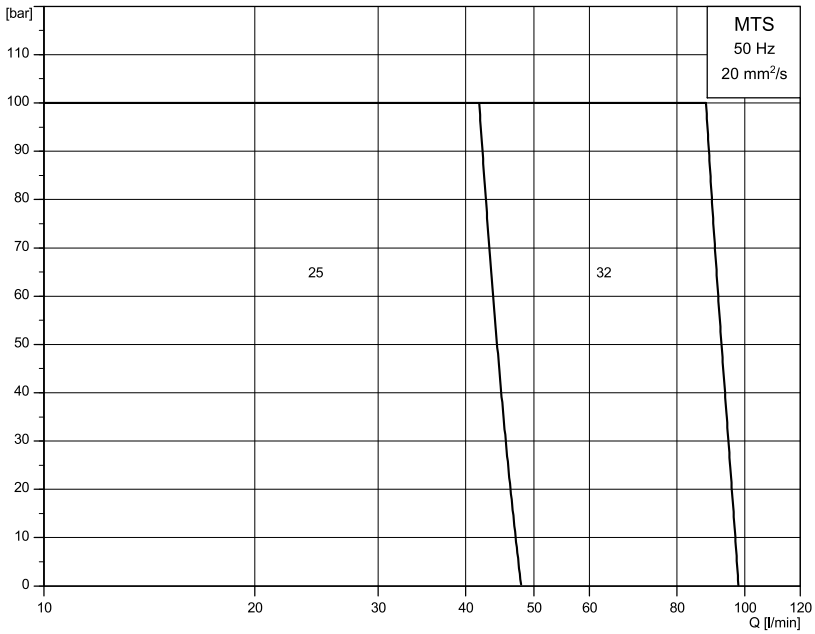

TM087170

Performance range - MTS, 50 Hz 20 mm^2/s

MTS, 60 Hz

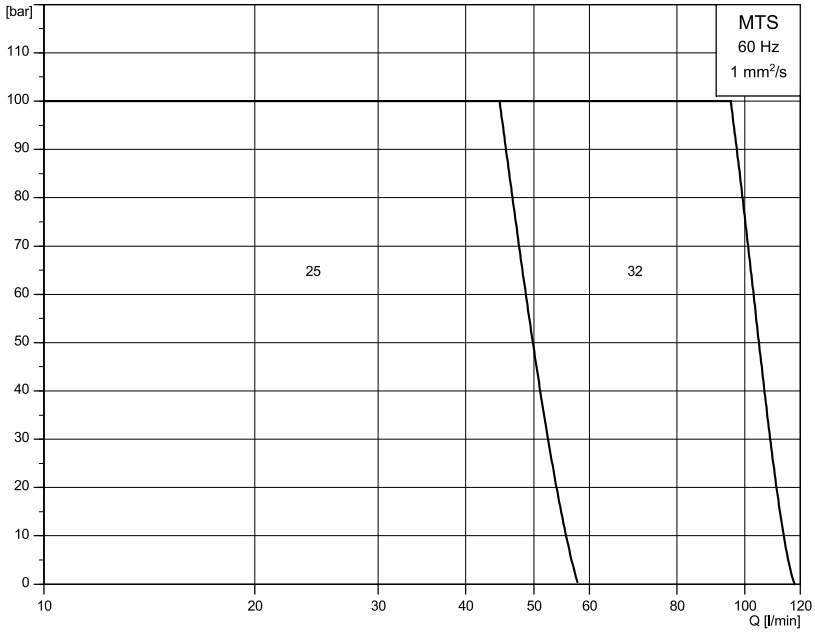

TM087171

Performance range - MTS, 60 Hz 1 mm²/s

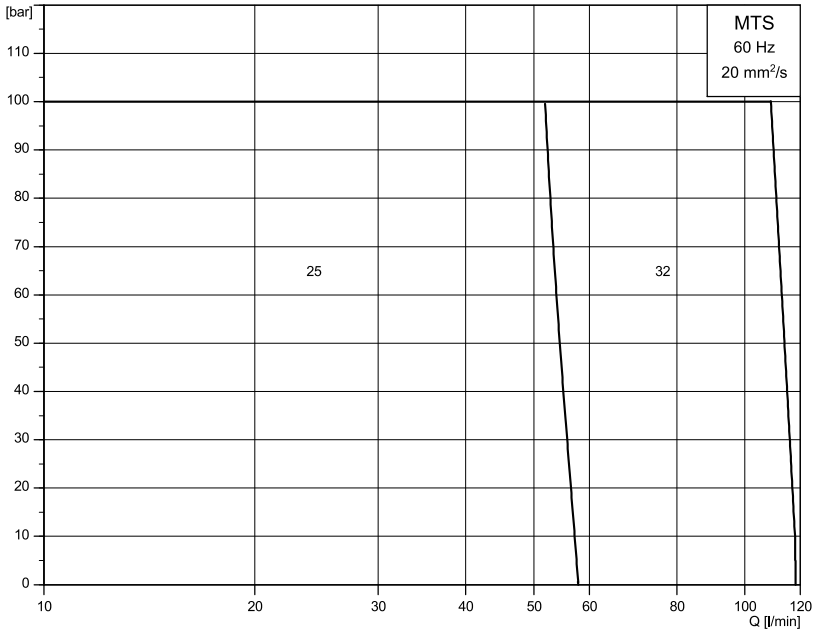

TM087172

Performance range - MTS, 60 Hz 20 mm²/s

MTSE, 50/60 Hz

Performance range - MTSE, 3x380-500 V

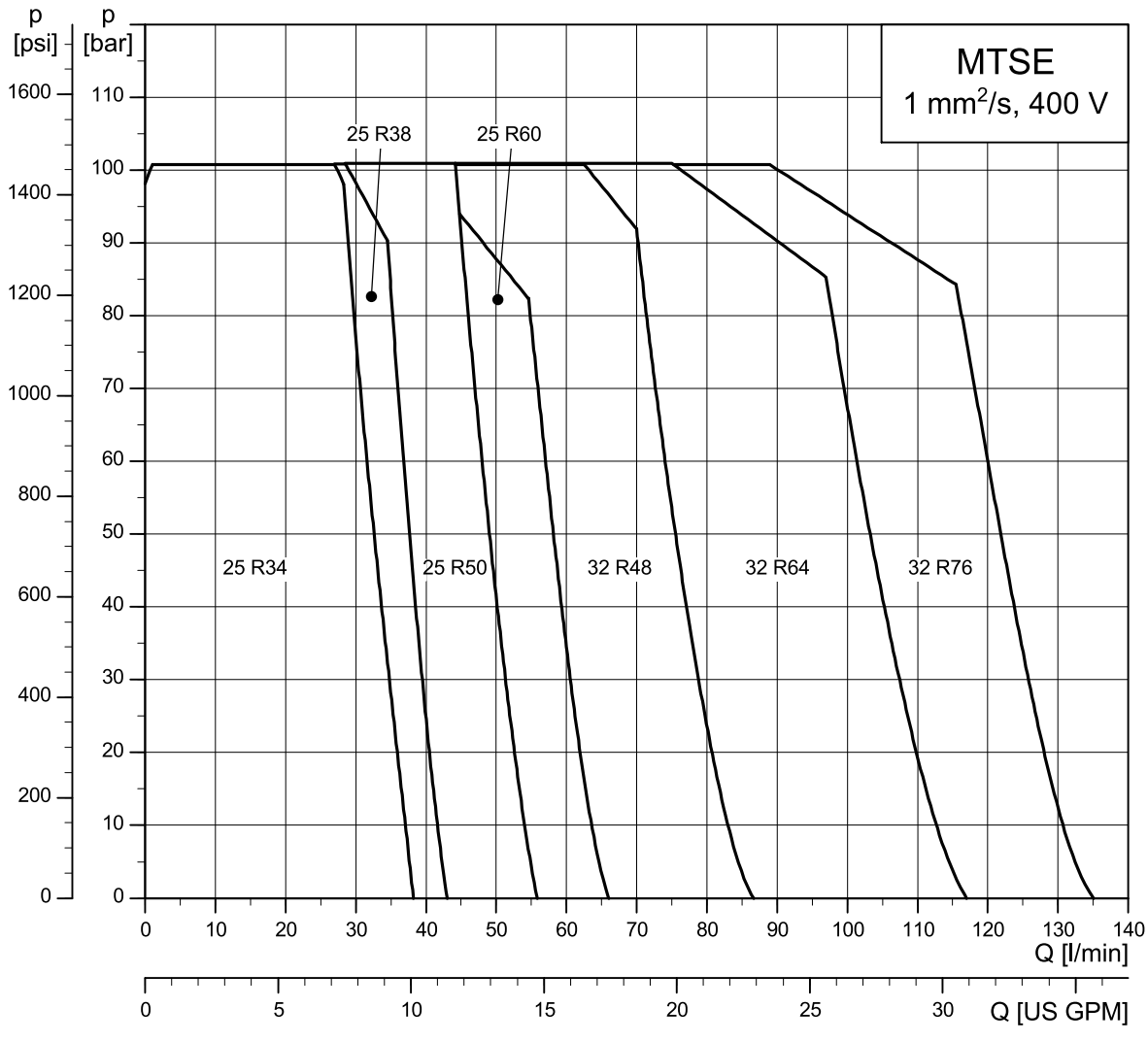

Performance range - MTSE, 50/60 Hz

Performance range - MTSE, 3x200-240 V

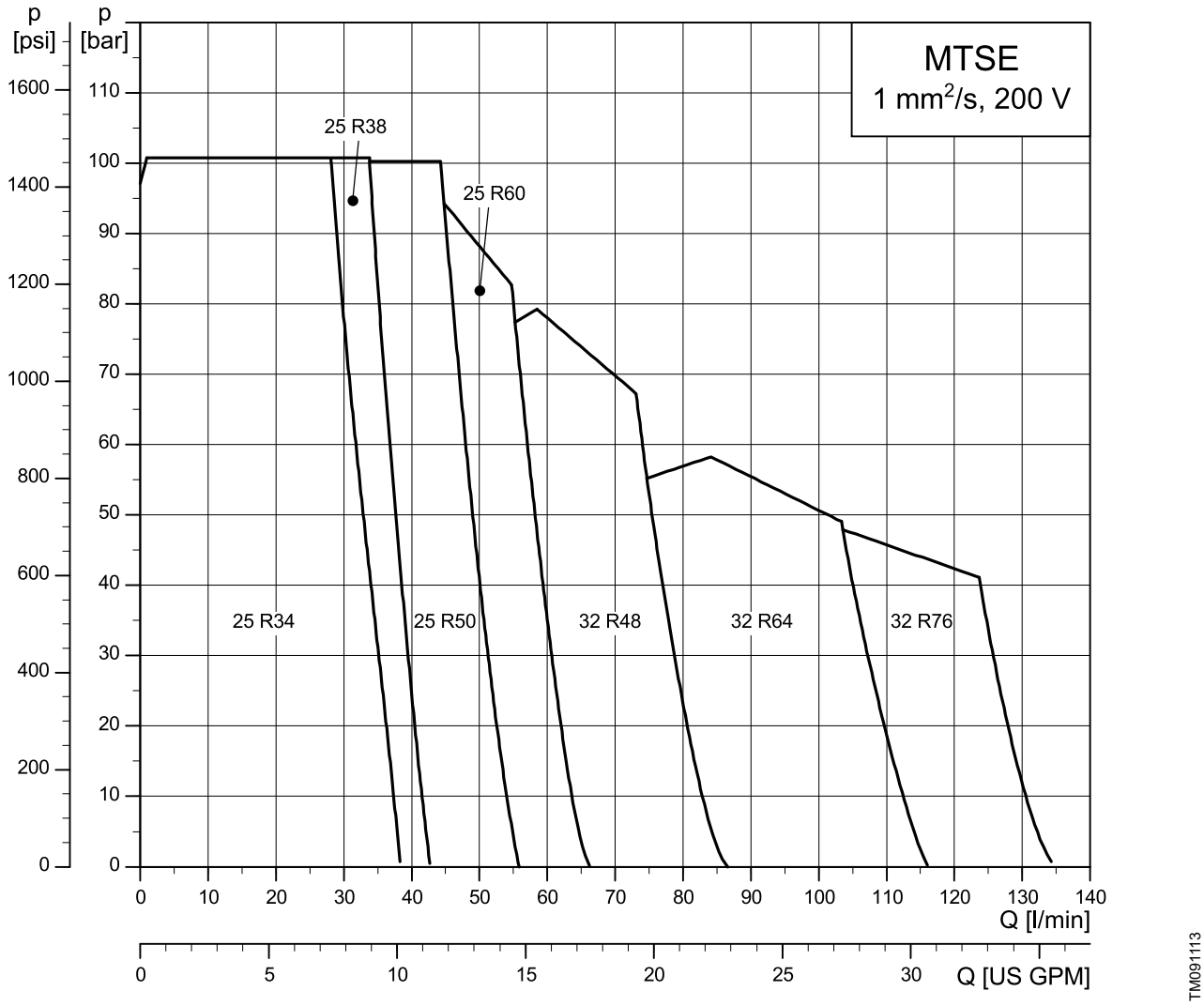

Performance range - MTSE, 50/60 Hz

4. Product range

50 Hz

Range	MTS 25	MTS 32
Flow range [l/min]	0 - 45.2	0 - 92.4
Motor power P2 [kW]	0.7 - 9.8	1.4 - 19

60 Hz

Range	MTS 25	MTS 32
Flow range [l/min]	0 - 44.7	0 - 113
Motor power P2 [kW]	0.8 - 11.8	1.6 - 22.9

Operating conditions

Range	MTS 25	MTS 32
Maximum temperature [°C]	80	80
Maximum differential pressure (emulsion) [bar]	100	100
Maximum differential pressure (oil) [bar]	100	100
Maximum inlet pressure [bar]	8	8

Pipe connection

Range	MTS 25	MTS 32
Inlet (tank-top version)	G 1	G 1 1/2
Inlet (dry version)	SAE 1"	SAE 1 1/2"
Outlet pipe thread	G 3/4	G 3/4
Outlet flange	SAE 3/4"	SAE 1"
Installation length [mm]	181	237

Shaft seal

Range	MTS 25	MTS 32
BQQV (mechanical seal)	•	•

5. Identification

Type key

Example: MTSE 25-40 R38 BQQV T

Code	Explanation
MTS	Pump type
E	Pump with E-motor
25	Frame size
40	Maximum pressure (bar) Pressure range: 10 to 100 bar
R	Spindle sense of gradient (R = right)
38	Spindle pitch angle in degrees Further spindle pitch angles: R34 R38 R48 R50 R60 R64 R76
BQQV	Mechanical shaft seal
T	T = Pump for tank-top installation D = Pump for dry installation H = Pump for horizontal installation

6. Construction

MTS 25 and 32

Axial pipe thread connection on inlet side

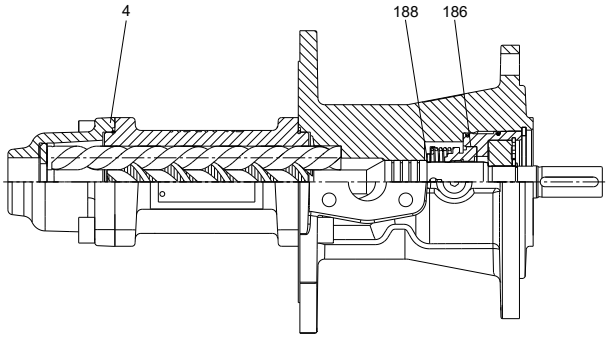

TM088177

SAE flange on inlet side

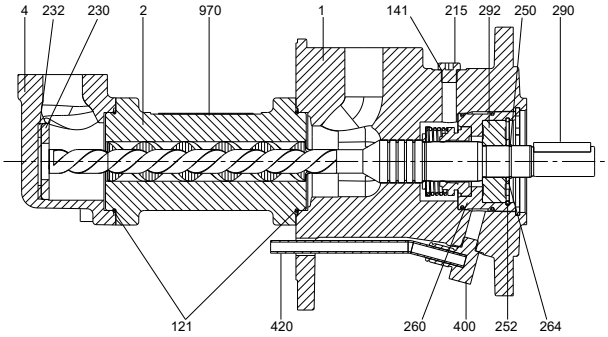

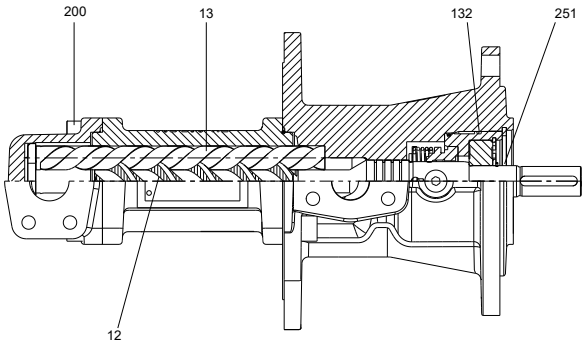

TM088176

Pos.	Designation	Pos.	Designation
1	Outlet casing	230	Thrust disc
2	Rotor housing	232	Rubber disc
4	Inlet casing	250	Circlip
12	Drive screw	251	Circlip
13	Idler screw	252	Circlip
121	O-ring	260	Bearing housing
132	O-ring	264	Supporting washer
133	O-ring	290	Key
141	Gasket	292	Deep-groove ball bearing
186	Mechanical shaft seal	400	Adapter
188	Supporting washer	420	Tube
200	Hexagon socket head screw	970	Nameplate
215	Screw plug		

Material specification

Pos.	Designation		Materials
2	Rotor housing (basic material)	EN GJL-250	GG25
	Rotor housing (active surfaces in the spindle bores)	Specially hardened	Basic hardness, 171 HB
			Surface hardness, 420 HV
4	Inlet casing	EN-GJL-250	GG25
1	Outlet casing	EN-GJL-250	GG25
12 + 13	Screw set (basic material)	1.2379	X155CrVMo12-1 / X153CrVMoV12
	Screw set (surface)		nitrided, 58-60 HRC; 1200-1300 HV
186	Mechanical shaft seal	AX15EA-025	SiC/SiC, FPM, 1.4310

7. Operating conditions

Pumped liquids

List of pumped liquids

The composition, oil content, that is, the ability to provide lubrication, and cooling effect of the liquid determine the pump maintenance intervals and maximum permissible performance data.

Based on DIN 51 385, cooling lubricants are divided into three groups based on water and oil content. The pump also pumps cooling lubricants with a very low lubricating effect, but a very high cooling performance.

Cooling lubricant main group	Subgroup	Effect at the processing spot
L Solutions	Solutions of inorganic materials in water	Higher cooling effect, lower lubricating effect
	Solutions, dispersions of organic and synthetic materials in water	
E Emulsions	Oil-in-water emulsions (Oil content E 2 to E 20 %)	Cooling and lubricating effect
S Petroleum-based cutting and grinding oils (natural and synthetic)	Cutting oils without additives (pure)	Higher lubricating effect, lower cooling effect
	Cutting oils with polar (physically effective) additives	
	Cutting oils with mild-effect (lubricating film forming) EP additives	Better surface adhesion protecting against corrosion
	Cutting oils with polar and mild-effect EP additives	
	Cutting oils with active (chemical) EP additives	Higher temperature and pressure resistance
	Cutting oils with polar and active EP additives	

Related information

Applications

Filtration

To reach an acceptable pump life, we recommend that you filtrate the cooling lubricants to the following cleanness classes according to ISO 4406/99. The recommended cleanness class depends on the pumping pressure and abrasive class 1 to 7.

There are process examples for abrasive classes provided in the table below.

The additional specifications to filter mesh and mass proportion are guide values for orientation. The decisive factor is the cleanness of the liquid indicated by the cleanness class.

To avoid damage by coarse particles, we recommend that you use a filter mesh of 65 µm (nominal, two dimensional) or finer.

	Abrasive class													
	1		**2**		**3**		**4**		**5**		**6**		**7**	
Material	Steel, GG, Al		Steel, GG, Al		Al (Si > 5 %)		Steel		Steel, hard		Hard metal		Titanium	
Process	Drilling		Turning/milling		Turning/milling		Grinding		Grinding		Grinding		Grinding	
Tool	HSS		Tungsten carbide		Tungsten carbide		Corundum		Corundum		CBN		Diamond	
Pressure stage	Oil	Emulsion	Oil	Emulsion	Oil	Emulsion	Oil	Emulsion	Oil	Emulsion	Oil	Emulsion	Oil	Emulsion
≤ 100 bar	21/19/16 ≤ 30 µm ≤ 30 mg/l	**21/19/16** **≤ 30 µm** **≤ 30 mg/l**	21/19/16 ≤ 25 µm ≤ 25 mg/l	**21/19/16** **≤ 25 µm** **≤ 25 mg/l**	**21/19/16** **≤ 20 µm** **≤ 20 mg/l**	**21/19/16** **≤ 20 µm** **≤ 20 mg/l**	**20/18/15** **≤ 17 µm** **≤ 15 mg/l**	**20/18/15** **≤ 17 µm** **≤ 15 mg/l**	**20/18/15** **≤ 15 µm** **≤ 10 mg/l**	**20/18/15** **≤ 15 µm** **≤ 10 mg/l**	**19/17/14** **≤ 10 µm** **≤ 5 mg/l**	**19/17/14** **≤ 10 µm** **≤ 5 mg/l**	**18/16/13** **≤ 6 µm** **≤ 3 mg/l**	**18/16/13** **≤ 6 µm** **≤ 3 mg/l**
≤ 80 bar	22/20/17 ≤ 50 µm ≤ 60 mg/l	22/20/17 ≤ 50 µm ≤ 60 mg/l	22/20/17 ≤ 45 µm ≤ 60 mg/l	22/20/17 ≤ 45 µm ≤ 60 mg/l	22/20/17 ≤ 40 µm ≤ 40 mg/l	22/20/17 ≤ 40 µm ≤ 40 mg/l	21/19/16 ≤ 30 µm ≤ 30 mg/l	21/19/16 ≤ 30 µm ≤ 30 mg/l	**21/19/16** **≤ 20 µm** **≤ 20 mg/l**	**21/19/16** **≤ 20 µm** **≤ 20 mg/l**	**20/18/15** **≤ 15 µm** **≤ 10 mg/l**	**20/18/15** **≤ 15 µm** **≤ 10 mg/l**	**19/17/14** **≤ 6 µm** **≤ 10 mg/l**	**19/17/14** **≤ 6 µm** **≤ 10 mg/l**
≤ 60 bar	23/21/18 ≤ 60 µm ≤ 120 mg/l	23/21/18 ≤ 60 µm ≤ 120 mg/l	23/21/18 ≤ 55 µm ≤ 100 mg/l	23/21/18 ≤ 55 µm ≤ 100 mg/l	23/21/18 ≤ 50 µm ≤ 60 mg/l	23/21/18 ≤ 50 µm ≤ 60 mg/l	22/20/17 ≤ 50 µm ≤ 60 mg/l	22/20/17 ≤ 50 µm ≤ 60 mg/l	22/20/17 ≤ 40 µm ≤ 40 mg/l	**22/20/17** **≤ 40 µm** **≤ 40 mg/l**	**21/19/16** **≤ 20 µm** **≤ 20 mg/l**	**21/19/16** **≤ 20 µm** **≤ 20 mg/l**	**20/18/15** **≤ 10 µm** **≤ 15 mg/l**	**20/18/15** **≤ 10 µm** **≤ 15 mg/l**
≤ 30 bar	24/22/19 ≤ 70 µm ≤ 160 mg/l	24/22/19 ≤ 70 µm ≤ 160 mg/l	24/22/19 ≤ 55 µm ≤ 160 mg/l	24/22/19 ≤ 55 µm ≤ 160 mg/l	24/22/19 ≤ 55µm ≤ 140 mg/l	21/19/16 ≤ 55µm ≤ 140 mg/l	23/21/18 ≤ 80 µm ≤ 120 mg/l	23/21/18 ≤ 80 µm ≤ 120 mg/l	23/21/18 ≤ 60 µm ≤ 80 mg/l	23/21/18 ≤ 60 µm ≤ 80 mg/l	**22/20/17** **≤ 40 µm** **≤ 40 mg/l**	**22/20/17** **≤ 40 µm** **≤ 40 mg/l**	**21/19/16** **≤ 10 µm** **≤ 15 mg/l**	**21/19/16** **≤ 10 µm** **≤ 15 mg/l**

Note that values **in bold** indicate a shorter operating life of the pump.

Control of MTSE pumps

Control options

It is possible to communicate with E-pumps via the following platforms:

- operating panel on the pump
- Grundfos GO
- Grundfos GO Link
- central management system.

The purpose of controlling an E-pump is to monitor and control the pressure, temperature, flow rate, and liquid level of the system.

Operating panels

The operating panel on the E-pump terminal box makes it possible to change the setpoint settings manually. All settings are saved if the power supply is switched off.

The following operating panels are available as standard:

- HMI 200
- HMI 300.

Note that these panels include an integrated radio module.

The following operating panels without an integrated radio module are available on request:

- HMI 100
- HMI 101
- HMI 201
- HMI 301.

Standard operating panel, HMI 200 and HMI 201

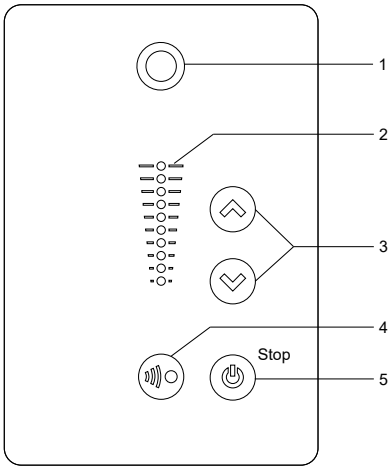

TM054848

Pos.	Symbol	Description
1		**Grundfos Eye**: Indicator light showing the operating status of the product
2	-	Light fields for indication of the setpoint
3		**Up**/**Down**: Buttons to change the setpoint
4		**Radio communication**: Button enabling radio communication with the Grundfos GO
5		**Start**/**Stop**: Button for starting and stopping the product

Advanced operating panel, HMI 300 and HMI 301

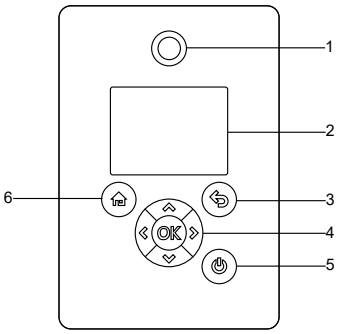

TM054849

Pos.	Symbol	Description
1		**Grundfos Eye**: Indicator light showing the operating status of the product
2	-	Graphical color display
3		**Back**: Button for going one step back
4		**Left**/**Right**: Button navigating between main menus, displays and digits
		Up/**Down**: Buttons navigating between submenus or changing the value settings
	OK	**OK**: Button for saving changed values, resetting alarms, expanding the value field, and enabling radio connection with the Grundfos GO
5		**Start**/**Stop**: Button for starting and stopping the product
6		**Home**: Button for going to the Home menu

Central management system

Communication with the E-pump is possible even if the operator is not present near the E-pump. Communication is enabled by connecting the E-pump to a central building management system, which allows the operator to monitor the pump, and change control modes and setpoint settings.

Communication between E-pumps and a central building management system is enabled via a Grundfos Communication Interface Module (CIM).

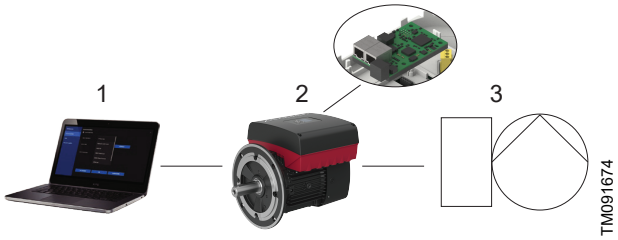

Structure of a central management system

Pos.	Description
1	Central management system
2	Communication Interface Module (CIM)
3	E-pump

Related information

CIM (Communication Interface Modules)

Communication

MGE 2.2 kW

Grundfos GO Link

The product is designed for wired or wireless communication with the Grundfos GO Link, allowing for setting functions and accessing status overviews, configuration and current operating parameters.

Use the Grundfos GO Link together with the following interfaces:

- Ethernet cable: only with FM310 and FM311
- Grundfos MI 301: wired connection with USB cable (wireless connection over radio, only with HMI 100, HMI 200 and HMI 300)
- Grundfos PC Tool Link: wired connection with USB cable.

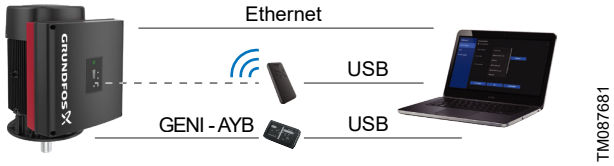

Grundfos GO Link setup

Pos.	Description
1	Standard Ethernet cable with at least CAT5e/CAT6 rating
2	Grundfos MI 301 enabling radio communication (to be used together with a USB cable to connect to a laptop)
3	Grundfos PC Tool Link module enabling wired connection to the pump (to be used together with a USB cable to connect to a laptop)

Related information

Infrared and radio communication

MGE 3 to 22 kW

Bluetooth

Via the built-in Bluetooth module, the product can communicate with the Grundfos GO. Bluetooth communication can take place at distances up to 10 metres.

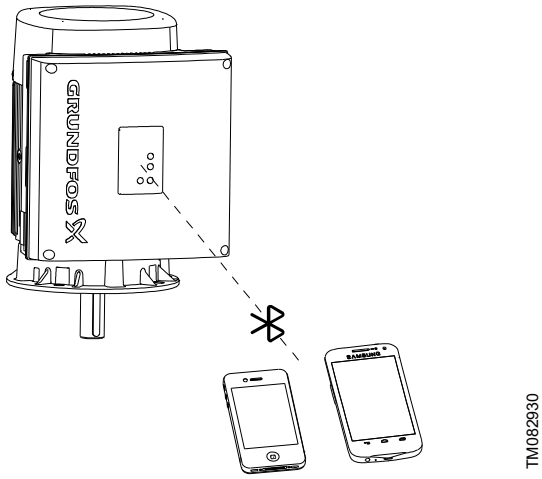

Bluetooth information

Frequency of operation	2400 - 2483.5 MHz
Modulation type	GFSK
Data rate	2 Mbps
Transmit power	5 dBm EIRP with internal antenna

GLoWpan information

Frequency of operation	2405-2480 MHz
Modulation type	GP O-QPSK
Data rate	1 Mbps
Transmit power	5 dBm EIRP with internal antenna

Related information

Bluetooth communication

Control modes for E-pumps

Grundfos MTSE pumps are only available without a pressure sensor.

MTSE without sensor

MTSE pumps without a sensor are suitable in the following situations:

- when uncontrolled operation is required
- when another sensor is retrofit to control, for example, the flow rate, temperature, differential temperature, liquid level and pH value at some arbitrary points in the system.

MGE 2.2 to 22 kW

These MTSE pumps without a sensor can be set to either of the following control modes:

- constant pressure
- constant curve
- constant other value.

In constant pressure operating mode, the pump adjusts its performance to the desired setpoint. See the figure below.

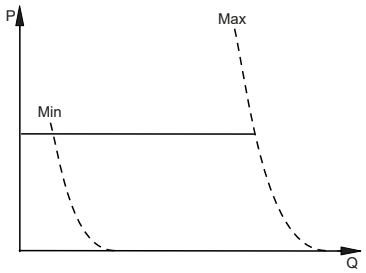

TM074814

Constant pressure mode

In constant curve operating mode, which is the factory setting, the pump operates according to the constant curve set. See the figure below.

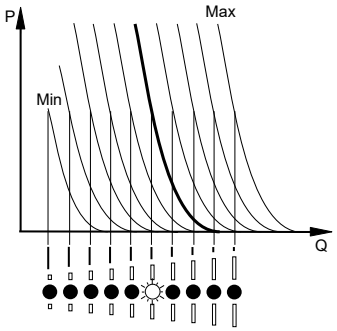

TM074810

Constant curve mode

Functional module for MGE 2.2 kW

FM300

The module has a number of inputs and outputs enabling the motor to be used in advanced applications where many inputs and outputs are required.

Inputs and outputs

The module has the following connections:

- three analog inputs
- one analog output
- two dedicated digital inputs
- two configurable digital inputs or open-collector outputs
- Grundfos Digital Sensor input and output
- two Pt100/1000 inputs
- two LiqTec sensor inputs
- two signal relay outputs
- GENIbus connection.

Connection terminals

All inputs and outputs are internally separated from the mains-conducting parts by reinforced insulation, and are galvanically separated from other circuits. All control terminals are supplied with protective extra-low voltage (PELV) ensuring protection against electric shock.

- Signal relay outputs
  - Signal relay 1:
    LIVE:
    Power supply voltages up to 250 VAC can be connected to this output.
    PELV:
    The output is galvanically separated from other circuits. Therefore, the supply voltage or protective extra-low voltage can be connected to the output as desired.
  - Signal relay 2:
    PELV:
    The output is galvanically separated from other circuits. Therefore, the supply voltage or protective extra-low voltage can be connected to the output as desired.
- Power supply (terminals N, PE, L or L1, L2, L3, PE).

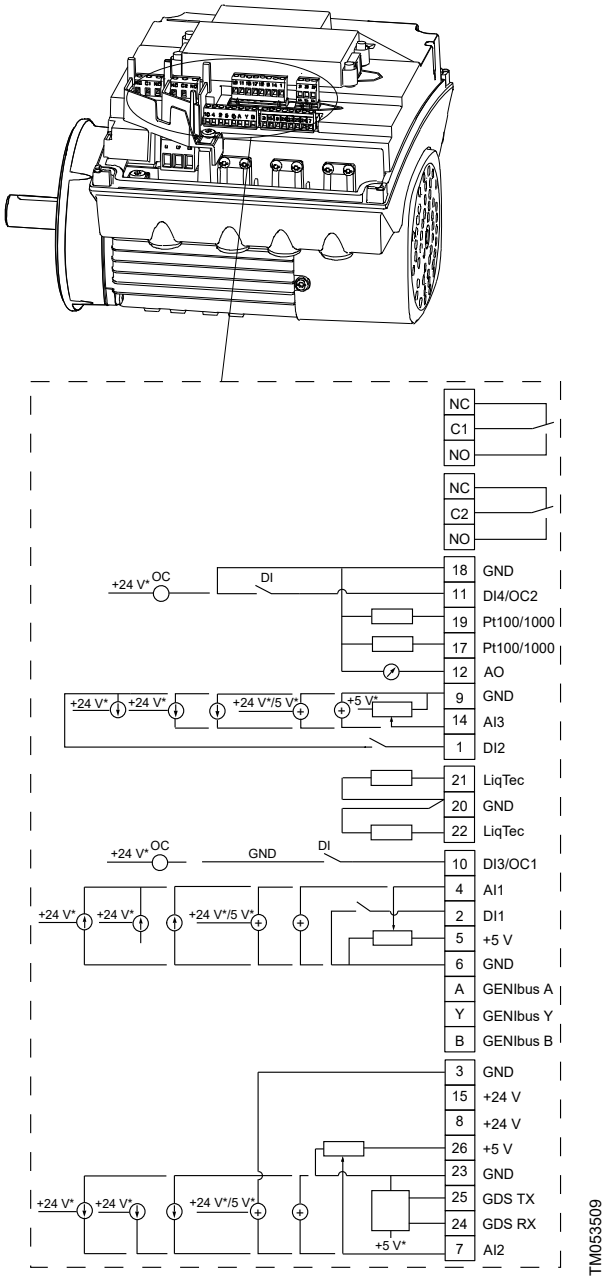

Connection terminals, FM300 functional module

* If an external supply source is used, there must be a connection to the GND.

Terminal	Type	Function
NC	Normally closed contact	Signal relay 1: LIVE or PELV
C1	Common	
NO	Normally open contact	
NC	Normally closed contact	Signal relay 2: PELV only
C2	Common	
NO	Normally open contact	
18	GND	Signal ground
110.5 - 3.5 V or 0-5 V or 0-10 V	DI4/OC2	Digital input/output, configurable Open collector: max. 24 V resistive or inductive

Terminal	Type	Function
19	Pt100/1000 input 2	Pt100/1000 sensor input 2
17	Pt100/1000 input 1	Pt100/1000 sensor input 1
12	AO	Analog output: • 0-20 mA or 4-20 mA • 0-10 V
9	GND	Signal ground
14	AI3	Analog input: • 0-20 mA or 4-20 mA • 0-10 V
1	DI2	Digital input, configurable
21	LiqTec sensor input 1	LiqTec sensor input 1 White conductor
20	GND	Signal ground Brown and black conductors
22	LiqTec sensor input 2	LiqTec sensor input 2 Blue conductor
10	DI3/OC1	Digital input/output, configurable Open collector: max. 24 V resistive or inductive
4	AI1	Analog input: • 0-20 mA or 4-20 mA • 0.5 - 3.5 V, 0-5 V or 0-10 V
2	DI1	Digital input, configurable
5	+5 V	Power supply to a potentiometer and sensor
6	GND	Signal ground
A	GENIbus, A	GENIbus, A (+)
Y	GENIbus, Y	GENIbus, GND
B	GENIbus, B	GENIbus, B (-)
3	GND	Signal ground
15	+24 V	Power supply
8	+24 V	Power supply
26	+5 V	Supply to potentiometer and sensor
23	GND	Signal ground
25	GDS TX	Grundfos Digital Sensor output
24	GDS RX	Grundfos Digital Sensor input
7	AI2	Analog input: • 0-20 mA or 4-20 mA • 0.5 - 3.5 V, 0-5 V or 0-10 V

Functional module for MGE 3 to 22 kW

FM310 and FM311

Inputs and outputs

Note that the FM311 functional module does not include Bluetooth connection.

The module has the following connections:

- three analog inputs
- one analog output
- two dedicated digital inputs
- two configurable digital inputs or open-collector outputs
- Grundfos Digital Sensor input and output
- two Pt100/1000 inputs
- two LiqTec sensor inputs
- two signal relay outputs
- GENIbus/Modbus connection
- two Safe Torque Off (STO) inputs [3)]
- Ethernet connection
- Bluetooth (BLE) connection. [4)]

3) Safe Torque Off (STO) is a safety function to stop the motor from turning without actively braking it. It complies with the definition in EN 61800-5-2.

4) The FM311 is without Bluetooth.

Connection terminals

All control terminals are supplied with safety extra-low voltage (SELV), ensuring protection against electric shock.

All inputs and outputs are internally separated from the mains-conducting parts by reinforced insulation, and are galvanically separated from other circuits.

Cables for the relays and the Ethernet cable must be rated at least 250 V / 2 A.

The relays are approved for overvoltage category II, regardless of whether power is supplied from a transformer or a power supply.

Signal relay outputs

Signal relay 1

LIVE: You can connect supply voltages up to 250 VAC to the output.

SELV: The output is galvanically separated from other circuits. Therefore, you can connect the supply voltage or safety extra-low voltage to the output as desired.

Signal relay 2

SELV: The output is galvanically separated from other circuits. Therefore, you can connect the supply voltage or safety extra-low voltage to the output as desired.

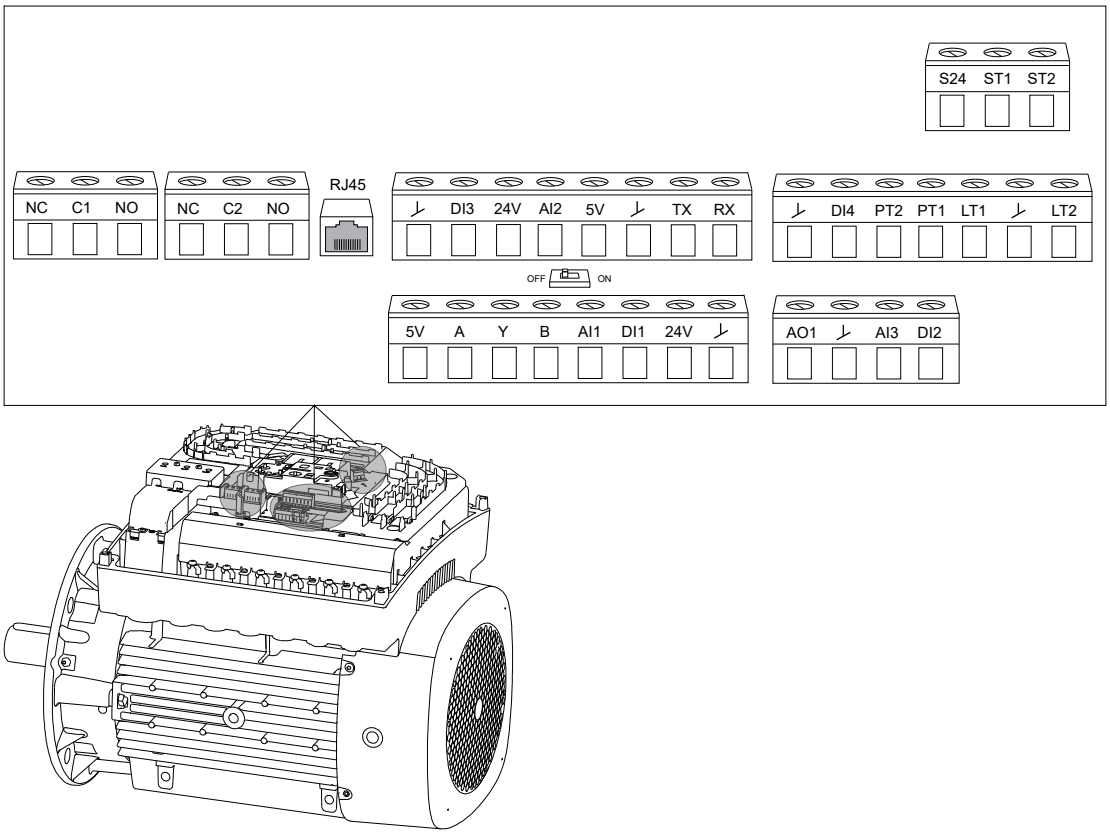

Terminal	Type	Function
NC	Normally closed contact	Signal relay 1: LIVE or SELV
C1	Common	
NO	Normally open contact	
NC	Normally closed contact	Signal relay 2: SELV only
C2	Common	
NO	Normally open contact	
RJ45	Ethernet	Ethernet communication
GND	GND	Signal ground
DI3	DI3/OC1	Digital input/output, configurable Open collector: max. 24 V resistive or inductive
24V	+24 V	Power supply
AI2	AI2	Analog input: • 0-20 mA or 4-20 mA • 0.5 - 3.5 V, 0-5 V or 0-10 V
5V	+5 V	Power supply to a potentiometer or sensor
GND	GND	Signal ground
TX	GDS TX	Grundfos Digital Sensor output
RX	GDS RX	Grundfos Digital Sensor input
GND	GND	Signal ground
DI4	DI4/OC2	Digital input/output, configurable Open collector: max. 24 V resistive or inductive
PT2	Pt100/1000 input 2	Pt100/1000 sensor input 2
PT1	Pt100/1000 input 1	Pt100/1000 sensor input 1
LT1	LiqTec sensor input 1	LiqTec sensor input 1 White conductor
GND	GND	Signal ground Brown and black conductors
LT2	LiqTec sensor input 2	LiqTec sensor input 2 Blue conductor

Terminal	Type	Function
5V	+5 V	Power supply to a potentiometer or sensor
A	GENIbus, A	GENIbus, A (+) / Modbus, D1 (+)
Y	GENIbus, Y	GENIbus, GND / Modbus, GND
B	GENIbus, B	GENIbus, B (-) / Modbus, D0 (-)
AI1	AI1	Analog input: • 0-20 mA or 4-20 mA • 0.5 - 3.5 V, 0-5 V or 0-10 V
DI1	DI1	Digital input [5], configurable
24V	+24 V	Power supply
GND	GND	Signal ground
AO1	AO	Analog output: • 0-20 mA or 4-20 mA • 0-10 V
GND	GND	Signal ground
AI3	AI3	Analog input: • 0-20 mA or 4-20 mA • 0.5 - 3.5 V, 0-5 V or 0-10 V
DI2	DI2	Digital input, configurable
S24	+24 V (STO)	Power supply to the Safe Torque Off inputs
ST1	STO1	Safe Torque Off - Input 1
ST2	STO2	Safe Torque Off - Input 2

5) The digital input 1 is factory-set to be start or stop input where an open circuit results in stop. A jumper is factory-fitted between the terminals DI1 and GND. Remove the jumper if the digital input 1 is to be used as external start or stop, or any other external function.

Safe Torque Off (STO) function

The Safe Torque Off (STO) is a safety function to stop the motor from turning without actively braking it. It follows the definition by the EN61800-5-2.

The principle of operation is the following:

- The Safe Torque Off (STO) function is activated (the input circuits are opened, for example, by opening contractors).
- The Safe Torque Off (STO) inputs of the motor de-energize.
- The motor cuts off the control signal for the output transistors.
- The motor coasts to a stop if it is running. The drive cannot restart while the Safe Torque Off (STO) function is activated. After deactivating the Safe Torque Off (STO), the motor can restart immediately.
- Finally, the control software of the motor generates a Safe Torque Off (STO) alert and corresponding indications. The Safe Torque Off (STO) alert can be configured.

For instructions on how to activate and operate the Safe Torque Off (STO) function, read the following installation and operating instructions.

Safe Torque Off

Installation and operating instructions

http://net.grundfos.com/qr/i/92916582

Installation

The following applies for pumps installed in tanks.

To protect the pump at startup and ensure correct performance, observe the requirements in the table below.

Pump type	A [mm]	B [mm]
MTS 25	Max. 127	Min. 25
MTS 32	Max. 179	Min. 25

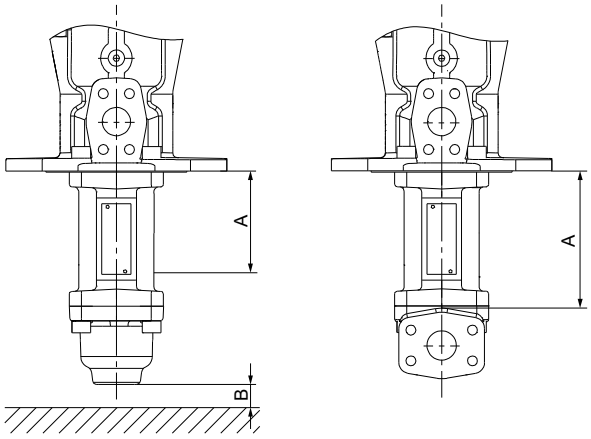

Design types Axial (left) and SAE (right)

Dimension **A [mm]** can be extended by the length of an inlet pipe, if installed.

For dimension **B [mm]**, we recommend an inlet distance of minimum 100 mm from the tank bottom to avoid any potential impurities to be sucked into the pump.

Inlet types

Two inlet types are available for the pumps:

- Axial inlet for tank-top installations
- SAE inlet for dry installations.

These types of installations are well-suited for operation with an inlet pressure up to 8 bar, and it is easy to access the pump. A silicon carbide mechanical shaft seal ensures a long service life.

Axial inlet

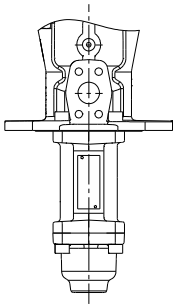

SAE inlet

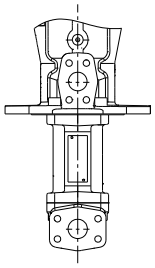

Mounting of the inlet pipe

When mounting the inlet pipe, do not exceed the maximum 18 mm thread length.

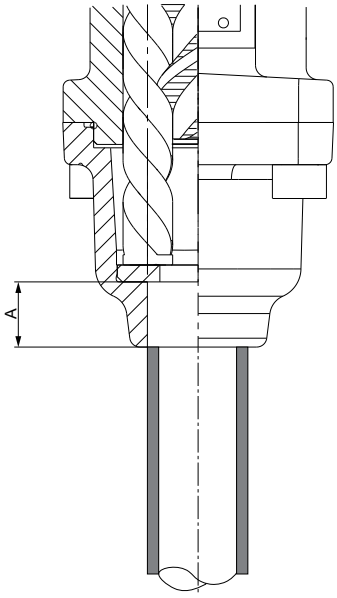

Maximum thread length (A)

Pump designs

The pump designs available as standard and on request are shown in the figure below.

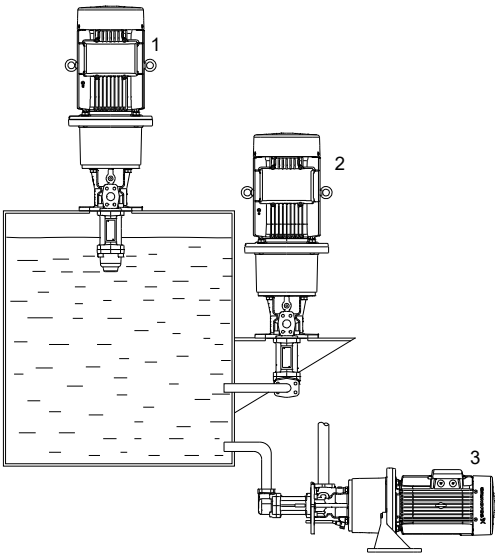

TM087643

Pump designs

Pos.	Description
1	Pump designed for tank-top installation
2	Pump designed for dry installation with flange
3	Pump designed for dry installation with mounting foot

Related information

MTS Model K pumps

Pumps for tank-top installation

The pump is equipped with a flange for mounting on the tank top, and the outlet port is above the tank cover. This type of installation is easy and economic to install.

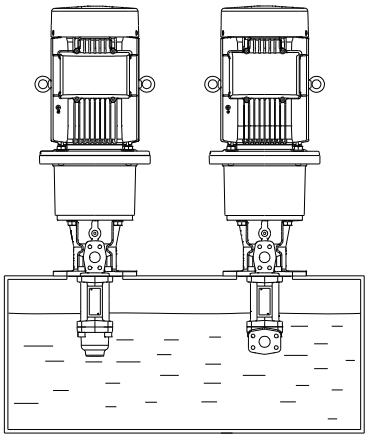

TM087644

Tank-top installation

Pumps for dry installation

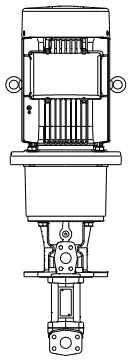

TM087645

Pump designed for dry installation with a flange

Pumps for horizontal installation

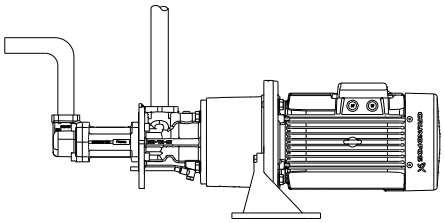

TM087646

Pump designed for dry installation with horizontal mounting foot

8. Performance curves and technical data

How to read the curve charts

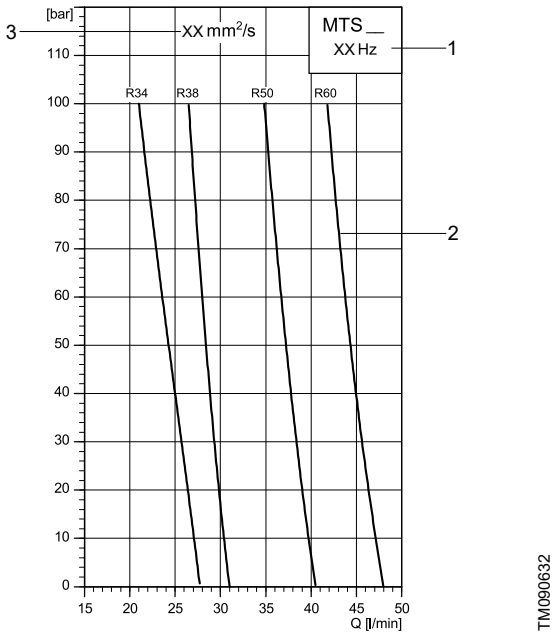

Pos.	Description
1	Pump type and frequency
2	Spindle pitch angle in degrees where R refers to the spindle sense of gradient (R=right)
3	Curve sheet for liquid at 1 mm^2/s or 20 mm^2/s

Note that the power consumption of the pump can be found in the data table below the curve.

Guidelines to performance curves

Performance tolerances:

Q > 100 l/min	VDMA 24284, Class II, Group II Tolerance ΔQ: +10 % / -5 %
Q ≤ 100 l/min	Grundfos specification Tolerance ΔQ: +10 % / -(20-0,15*Q_{nom}) %

Example:

MTS 25 R38	
at 30 bar: Q_{nom} = 27,7 l/min	
Maximum flow:	30.4 l/min
Minimum flow:	23.3 l/min

MTS 25, 50 Hz

Performance range

Performance data at 1 mm²/s (emulsion)

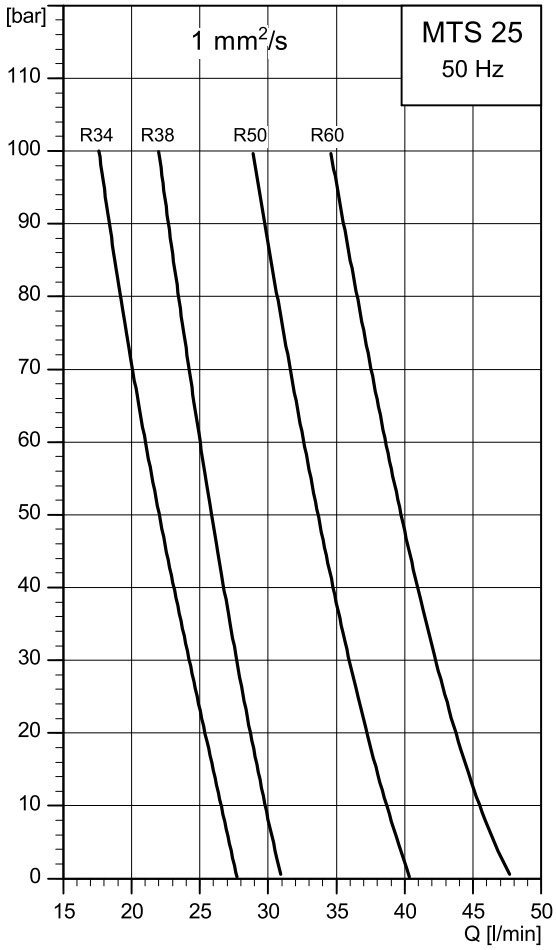

TM087135

Performance data at 20 mm²/s (cutting oil with EP additives)

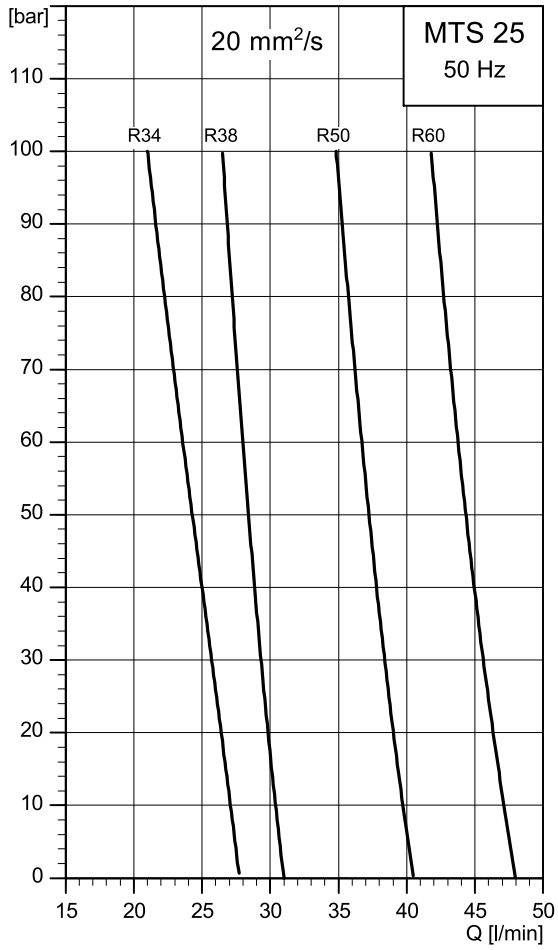

TM087137

Pressure [bar]	1 mm²/s (emulsion)								20 mm²/s (cutting oil with EP additives)							
	R34		R38		R50		R60		R34		R38		R50		R60	
	Q	P	Q	P	Q	P	Q	P	Q	P	Q	P	Q	P	Q	P
	[l/min]	[kW]	[l/min]	[kW]	[l/min]	[kW]	[l/min]	[kW]	[l/min]	[kW]	[l/min]	[kW]	[l/min]	[kW]	[l/min]	[kW]
10	26.6	0.7	29.7	0.7	38.5	1	45.2	1.1	27.5	0.7	30.4	0.7	39.7	1	47.1	1.1
20	25.4	1.2	28.7	1.3	37.2	1.7	43.8	2	26.6	1.2	29.8	1.3	39	1.7	46.3	2
30	24.2	1.8	27.7	1.9	36	2.5	42.3	3	25.7	1.8	29.3	1.9	38.4	2.5	45.6	3
40	23.1	2.3	26.8	2.5	34.8	3.3	41	4	24.9	2.3	28.9	2.5	37.8	3.3	45	4
50	22	2.8	25.9	3.1	33.7	4	39.8	5	24.2	2.8	28.4	3.1	37.2	4	44.3	5
60	21	3.4	25	3.7	32.6	4.8	39.6	5.9	23.5	3.4	28	3.7	36.7	4.8	43.8	5.9
70	20.1	3.9	24.2	4.3	31.6	5.6	37.5	6.9	22.9	3.9	27.6	4.3	36.2	5.6	43.2	6.9
80	19.2	4.5	23.4	4.9	30.6	6.3	36.4	7.9	22.3	4.5	27.2	4.9	35.7	6.3	42.7	7.9
90	18.4	5	22.7	5.5	29.7	7.1	35.5	8.8	21.8	5	26.8	5.5	35.3	7.1	42.2	8.8
100	17.6	5.6	22	6.1	28.9	7.9	34.6	9.8	20.9	5.6	26.5	6.1	34.8	7.9	41.8	9.8

Dimensional sketch

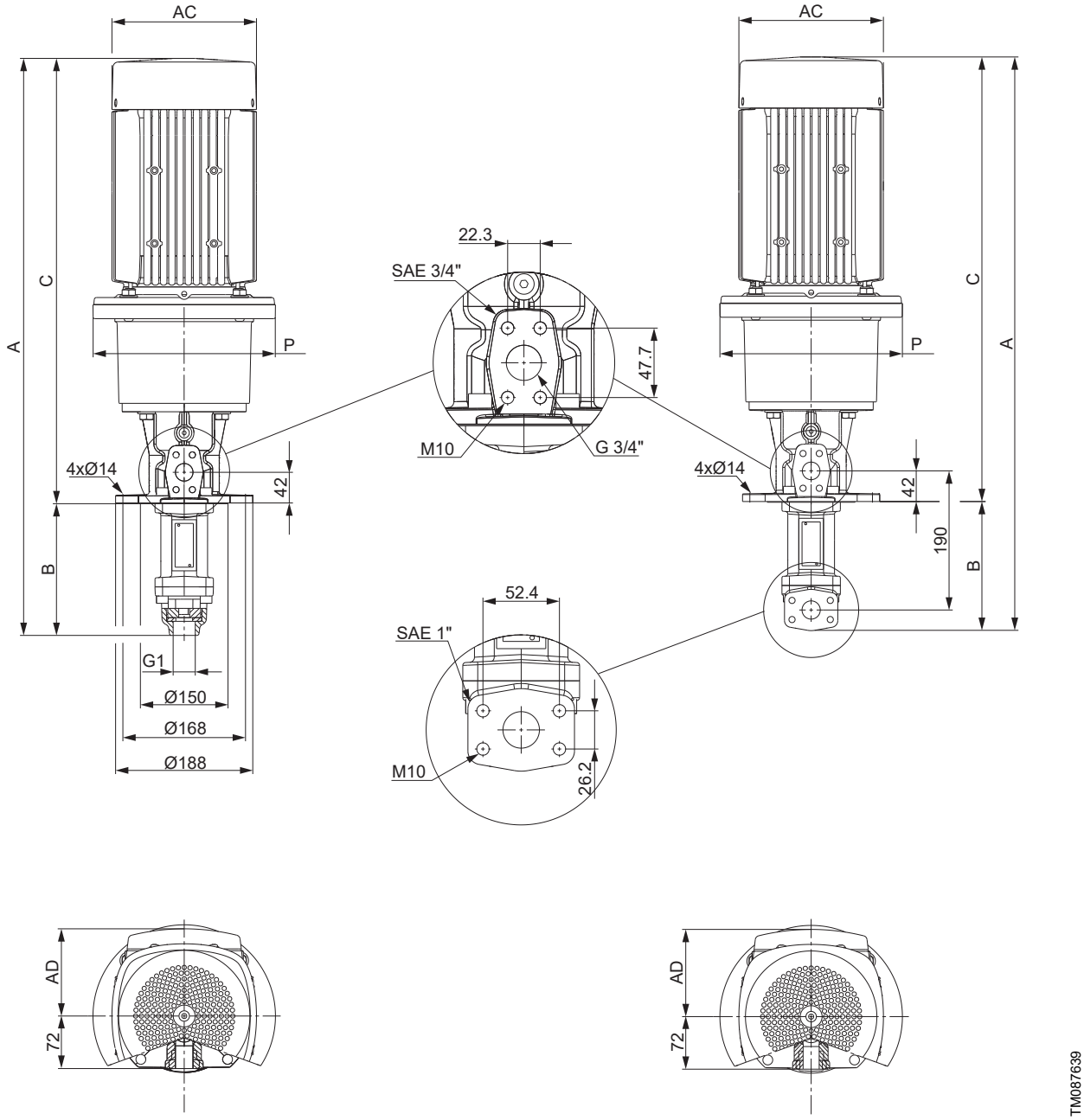

Tank-top installation (left), dry installation (right)

Dimensions and weights

Pump type	P2 [kW]	Dimensions [mm]									Net weight [kg]	
		A		B		C		AC	AD	P	Tank-top	Dry
		Tank-top	Dry	Tank-top	Dry	Tank-top	Dry					
MTS 25-30 R34	2.2	779	774	181	176	598	598	178	110	200	41	38
MTS 25-40 R34	3	788	783	181	176	607	607	198	120	250	44	42
MTS 25-50 R34	3	788	783	181	176	607	607	198	120	250	44	42
MTS 25-60 R34	4	825	820	181	176	644	644	220	134	250	54	52
MTS 25-70 R34	4	825	820	181	176	644	644	220	134	250	54	52
MTS 25-80 R34	5.5	864	859	181	176	683	683	220	134	300	63	62
MTS 25-90 R34	5.5	864	859	181	176	683	683	220	134	300	63	62
MTS 25-100 R34	7.5	852	847	181	176	671	671	260	159	300	69	68
MTS 25-30 R38	2.2	779	774	181	176	598	598	178	110	200	41	38

Pump type	P2 [kW]	Dimensions [mm]									Net weight [kg]	
		A		B		C		AC	AD	P	Tank-top	Dry
		Tank-top	Dry	Tank-top	Dry	Tank-top	Dry					
MTS 25-40 R38	3	788	783	181	176	607	607	198	120	250	44	42
MTS 25-50 R38	4	825	820	181	176	644	644	220	134	250	54	52
MTS 25-60 R38	4	825	820	181	176	644	644	220	134	250	54	52
MTS 25-70 R38	5.5	864	859	181	176	683	683	220	134	300	63	62
MTS 25-80 R38	5.5	864	859	181	176	683	683	220	134	300	63	62
MTS 25-90 R38	7.5	852	847	181	176	671	671	260	159	300	69	68
MTS 25-100 R38	7.5	852	847	181	176	671	671	260	159	300	69	68
MTS 25-30 R50	3	788	783	181	176	607	607	198	120	250	44	42
MTS 25-40 R50	4	825	820	181	176	644	644	220	134	250	54	52
MTS 25-50 R50	5.5	864	859	181	176	683	683	220	134	300	63	62
MTS 25-60 R50	5.5	864	859	181	176	683	683	220	134	300	63	62
MTS 25-70 R50	7.5	852	847	181	176	671	671	260	159	300	69	68
MTS 25-80 R50	7.5	852	847	181	176	671	671	260	159	300	69	68
MTS 25-90 R50	7.5	852	847	181	176	671	671	260	159	300	69	68
MTS 25-100 R50	11	988	983	181	176	807	807	314	204	350	98	97
MTS 25-30 R60	3	788	783	181	176	607	607	198	120	250	44	42
MTS 25-40 R60	4	825	820	181	176	644	644	220	134	250	54	52
MTS 25-50 R60	5.5	864	859	181	176	683	683	220	134	300	63	62
MTS 25-60 R60	7.5	852	847	181	176	671	671	260	159	300	69	68
MTS 25-70 R60	7.5	852	847	181	176	671	671	260	159	300	69	68
MTS 25-80 R60	11	988	983	181	176	807	807	314	204	350	98	97
MTS 25-90 R60	11	988	983	181	176	807	807	314	204	350	98	97
MTS 25-100 R60	11	988	983	181	176	807	807	314	204	350	98	97

MTS 32, 50 Hz

Performance range

Performance data at 1 mm²/s (emulsion)

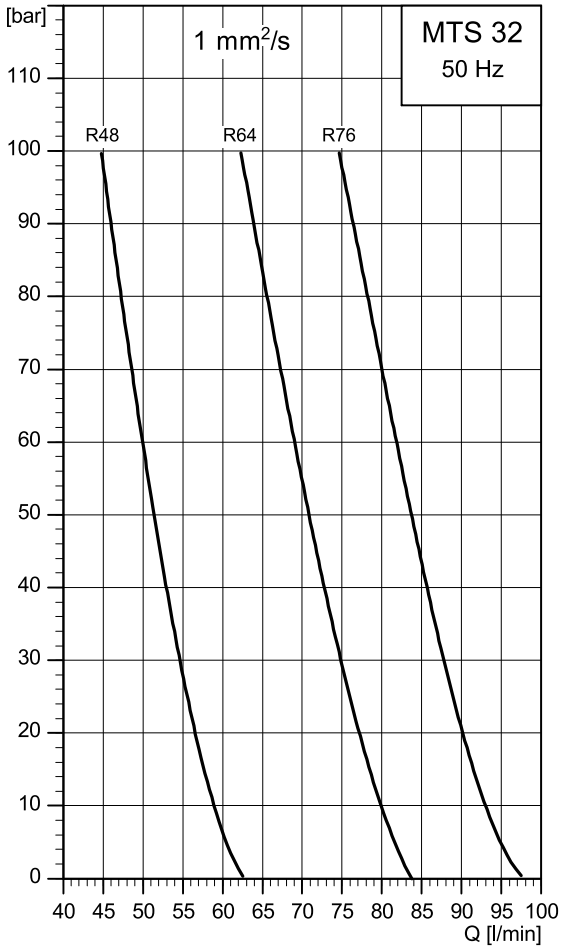

TM087136

Performance data at 20 mm²/s (cutting oil with EP additives)

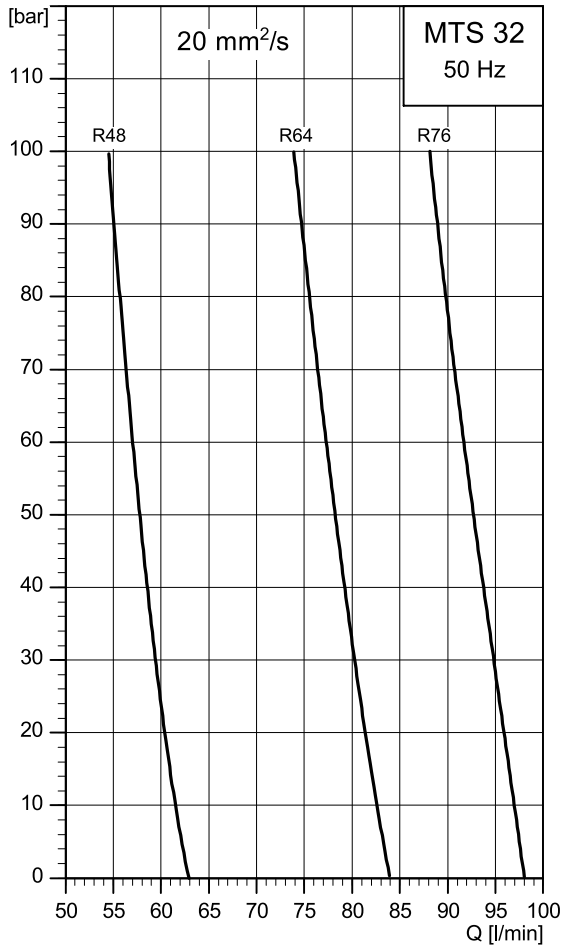

TM087138

Pressure [bar]	1 mm²/s (emulsion)						20 mm²/s (cutting oil with EP additives)					
	R48		R64		R76		R48		R64		R76	
	Q	P	Q	P	Q	P	Q	P	Q	P	Q	P
	[l/min]	[kW]	[l/min]	[kW]	[l/min]	[kW]	[l/min]	[kW]	[l/min]	[kW]	[l/min]	[kW]
10	58.5	1.4	79.4	1.9	92.4	2.3	61.3	1.4	82.5	1.9	97	2.3
20	56.6	2.5	77.2	3.5	90.2	4.2	60.4	2.5	81.4	3.5	95.9	4.2
30	54.8	3.7	75	5	87.9	6	59.5	3.7	80.3	5	94.8	6
40	53.1	4.8	72.9	6.6	85.8	7.9	58.6	4.8	79.2	6.6	93.7	7.9
50	51.5	6	70.9	8.1	83.8	9.7	57.8	6	78.2	8.1	92.7	9.7
60	49.9	7.2	69	9.7	81.8	11.6	57	7.2	77.3	9.7	91.7	11.6
70	48.5	8.3	67.2	11.3	79.9	13.4	56.3	8.3	76.4	11.3	90.7	13.4
80	47.2	9.5	65.5	12.8	78	15.3	55.7	9.5	75.5	12.8	89.8	15.3
90	45.9	10.6	63.8	14.4	76.3	17.1	55	10.6	74.7	14.4	88.9	17.1
100	44.8	11.8	62.3	15.9	74.6	19	54.5	11.8	73.9	15.9	88.1	19

Dimensional sketch

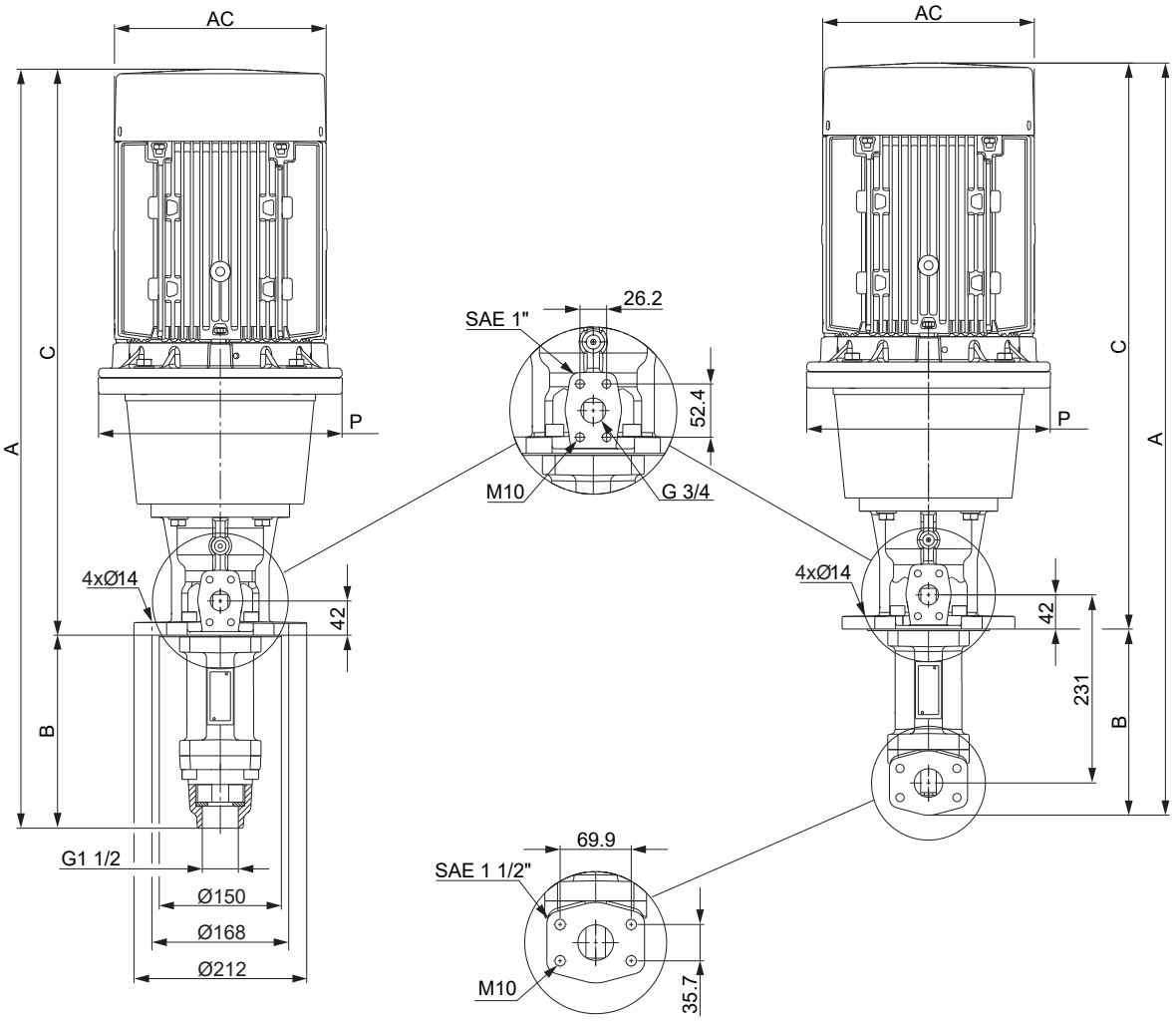

Tank-top installation (left), dry installation (right)

Dimensions and weights

Pump type	P2 [kW]	Dimensions [mm]									Net weight [kg]	
		A		B		C		AC	AD	P		
		Tank-top	Dry	Tank-top	Dry	Tank-top	Dry				Tank-top	Dry
MTS 32-30 R48	4	905	895	237	227	668	668	220	134	250	70	65
MTS 32-40 R48	5.5	944	934	237	227	707	707	220	134	300	79	73
MTS 32-50 R48	7.5	932	922	237	227	695	695	260	159	300	85	79
MTS 32-60 R48	7.5	932	922	237	227	695	695	260	159	300	85	79
MTS 32-70 R48	11	1068	1058	237	227	831	831	314	204	350	113	109
MTS 32-80 R48	11	1068	1058	237	227	831	831	314	204	350	113	109

Pump type	P2 [kW]	Dimensions [mm]									Net weight [kg]	
		A		B		C		AC	AD	P	Tank-top	Dry
		Tank-top	Dry	Tank-top	Dry	Tank-top	Dry					
MTS 32-90 R48	11	1068	1058	237	227	831	831	314	204	350	113	109
MTS 32-100 R48	15	1068	1058	237	227	831	831	314	204	350	125	120
MTS 32-30 R64	5.5	944	934	237	227	707	707	220	134	300	79	73
MTS 32-40 R64	7.5	932	922	237	227	695	695	260	159	300	85	79
MTS 32-50 R64	11	1068	1058	237	227	831	831	314	204	350	113	109
MTS 32-60 R64	11	1068	1058	237	227	831	831	314	204	350	113	109
MTS 32-70 R64	15	1068	1058	237	227	831	831	314	204	350	125	120
MTS 32-80 R64	15	1068	1058	237	227	831	831	314	204	350	125	120
MTS 32-90 R64	15	1068	1058	237	227	831	831	314	204	350	125	120
MTS 32-100 R64	18.5	1112	1102	237	227	875	875	314	204	350	132	127
MTS 32-30 R76	5.5	944	934	237	227	707	707	220	134	300	79	73
MTS 32-40 R76	7.5	932	922	237	227	695	695	260	159	300	85	79
MTS 32-50 R76	11	1068	1058	237	227	831	831	314	204	350	113	109
MTS 32-60 R76	11	1068	1058	237	227	831	831	314	204	350	113	109
MTS 32-70 R76	15	1068	1058	237	227	831	831	314	204	350	125	120
MTS 32-80 R76	15	1068	1058	237	227	831	831	314	204	350	125	120
MTS 32-90 R76	18.5	1112	1102	237	227	875	875	314	204	350	132	127
MTS 32-100 R76	18.5	1112	1102	237	227	875	875	314	204	350	132	127

MTS 25, 60 Hz

Performance range

Performance data at 1 mm²/s (emulsion)

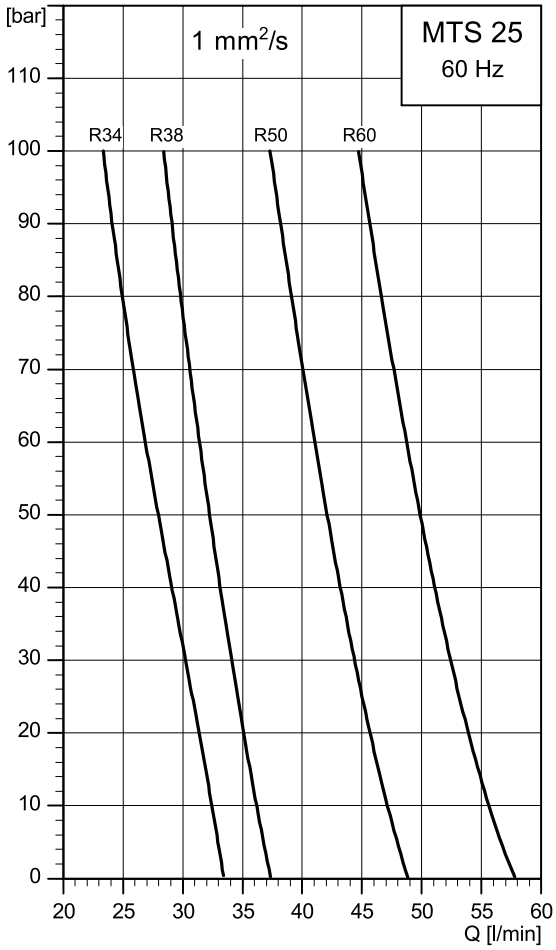

TM087139

Performance data at 20 mm²/s (cutting oil with EP additives)

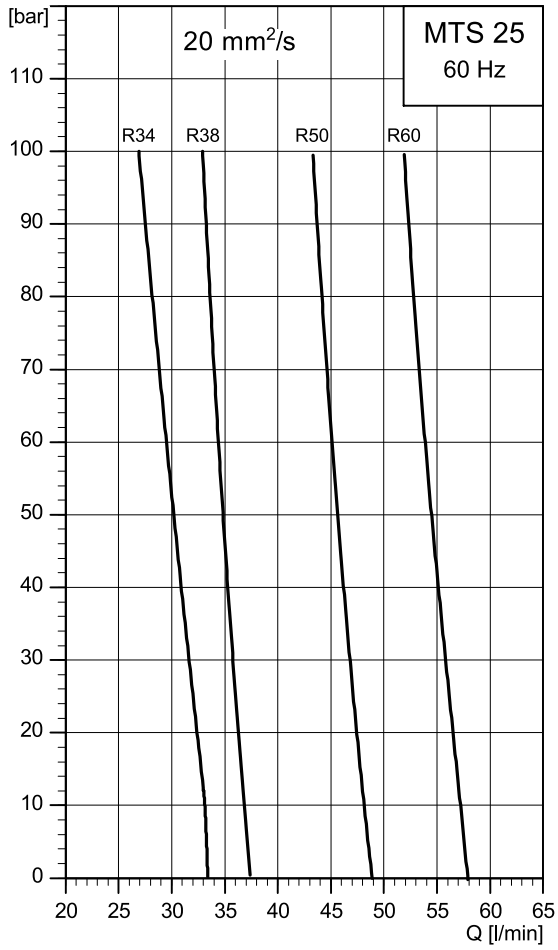

TM087141

Pressure [bar]	1 mm²/s (emulsion)								20 mm²/s (cutting oil with EP additives)							
	R34		R38		R50		R60		R34		R38		R50		R60	
	Q	P	Q	P	Q	P	Q	P	Q	P	Q	P	Q	P	Q	P
	[l/min]	[kW]	[l/min]	[kW]	[l/min]	[kW]	[l/min]	[kW]	[l/min]	[kW]	[l/min]	[kW]	[l/min]	[kW]	[l/min]	[kW]
10	32.6	0.8	36.1	0.8	47	1.1	55.4	1.3	33.5	0.8	36.8	0.8	48.1	1.1	57.2	1.3
20	31.4	1.5	35.1	1.6	45.7	2.1	53.9	2.5	32.6	1.5	36.3	1.6	47.4	2.1	56.5	2.5
30	30.2	2.1	34.1	2.3	44.4	3	52.5	3.6	31.7	2.1	35.8	2.3	46.8	3	55.8	3.6
40	29	2.7	33.2	3	43.2	3.9	51.1	4.8	30.9	2.7	35.3	3	46.2	3.9	55.1	4.8
50	27.9	3.4	32.2	3.7	42.1	4.9	49.9	6	30.1	3.4	34.8	3.7	45.7	4.9	54.5	6
60	26.9	4	31.4	4.5	41	5.8	48.7	7.1	29.4	4	34.4	4.5	45.1	5.8	53.9	7.1
70	25.9	4.7	30.6	5.2	40	6.7	47.6	8.3	28.8	4.7	34	5.2	44.6	6.7	53.3	8.3
80	25	5.3	29.8	5.9	39.1	7.7	46.6	9.5	28.2	5.3	33.6	5.9	44.1	7.7	52.8	9.5
90	24.1	5.9	29.1	6.6	38.2	8.6	45.6	10.7	27.7	5.9	33.3	6.6	43.7	8.6	52.3	10.7
100	23.3	6.6	28.4	7.4	37.3	9.5	44.7	11.8	26.8	6.6	32.9	7.4	43.3	9.5	51.9	11.8

Dimensional sketch

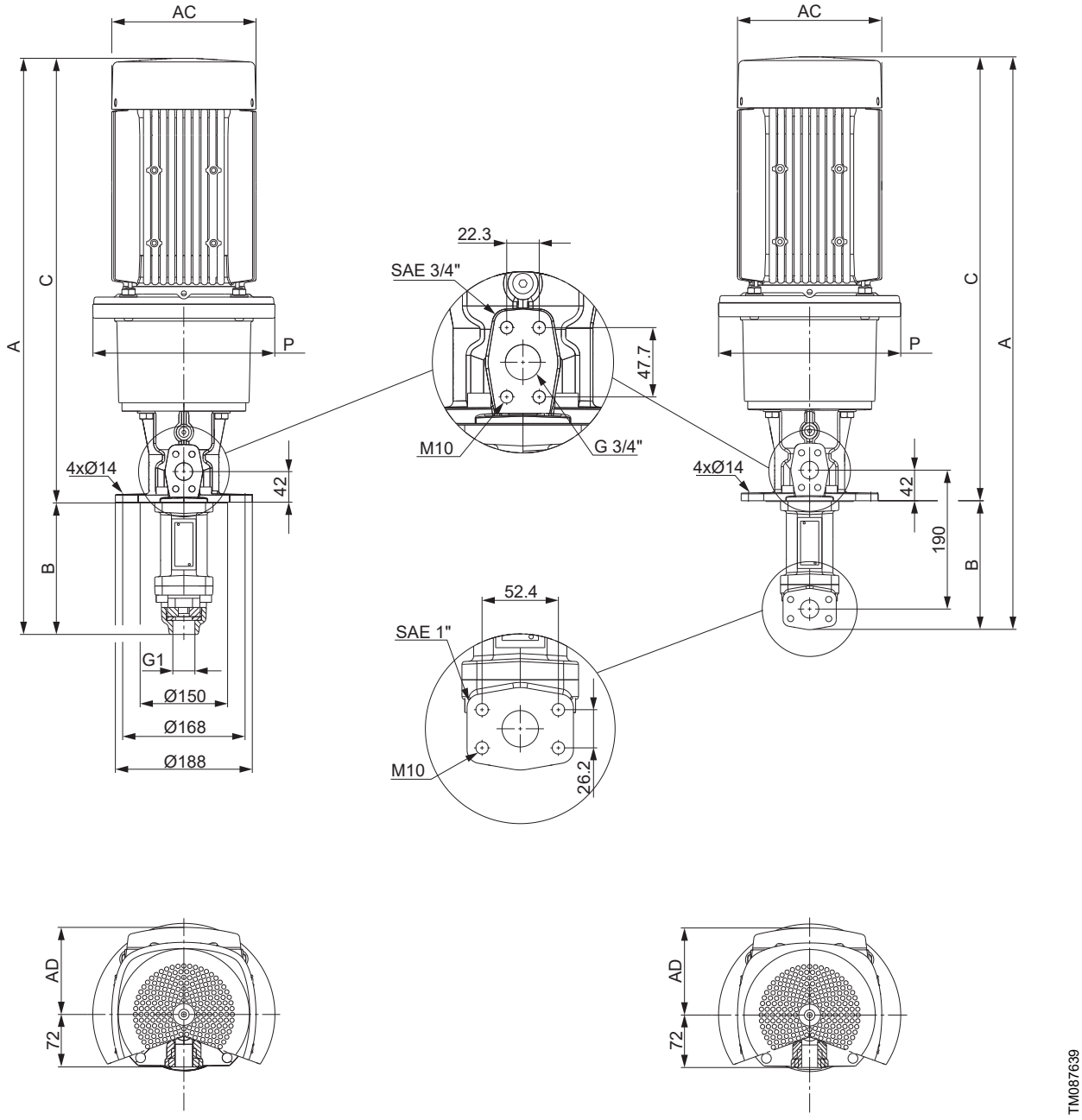

Tank-top installation (left), dry installation (right)

Dimensions and weights

Pump type	P2 [kW]	Dimensions [mm]									Net weight [kg]	
		A		B		C		AC	AD	P	Tank-top	Dry
		Tank-top	Dry	Tank-top	Dry	Tank-top	Dry					
MTS 25-30 R34	3	788	783	181	176	607	607	198	120	250	44	42
MTS 25-40 R34	3	788	783	181	176	607	607	198	120	250	44	42
MTS 25-50 R34	4	825	820	181	176	644	644	220	134	250	54	52
MTS 25-60 R34	5.5	864	859	181	176	683	683	220	134	300	63	62
MTS 25-70 R34	5.5	864	859	181	176	683	683	220	134	300	63	62
MTS 25-80 R34	5.5	864	859	181	176	683	683	220	134	300	63	62
MTS 25-90 R34	7.5	852	847	181	176	671	671	260	159	300	69	68
MTS 25-100 R34	7.5	852	847	181	176	671	671	260	159	300	69	68
MTS 25-30 R38	3	788	783	181	176	607	607	198	120	250	44	42

Pump type	P2 [kW]	Dimensions [mm]									Net weight [kg]	
		A		B		C		AC	AD	P	Tank-top	Dry
		Tank-top	Dry	Tank-top	Dry	Tank-top	Dry					
MTS 25-40 R38	4	825	820	181	176	644	644	220	134	250	54	52
MTS 25-50 R38	4	825	820	181	176	644	644	220	134	250	54	52
MTS 25-60 R38	5.5	864	859	181	176	683	683	220	134	300	63	62
MTS 25-70 R38	5.5	864	859	181	176	683	683	220	134	300	63	62
MTS 25-80 R38	7.5	852	847	181	176	671	671	260	159	300	69	68
MTS 25-90 R38	7.5	852	847	181	176	671	671	260	159	300	69	68
MTS 25-100 R38	7.5	852	847	181	176	671	671	260	159	300	69	68
MTS 25-30 R50	3	788	783	181	176	607	607	198	120	250	44	42
MTS 25-40 R50	4	825	820	181	176	644	644	220	134	250	54	52
MTS 25-50 R50	5.5	864	859	181	176	683	683	220	134	300	63	62
MTS 25-60 R50	7.5	852	847	181	176	671	671	260	159	300	69	68
MTS 25-70 R50	7.5	852	847	181	176	671	671	260	159	300	69	68
MTS 25-80 R50	11	988	983	181	176	807	807	314	204	350	98	97
MTS 25-90 R50	11	988	983	181	176	807	807	314	204	350	98	97
MTS 25-100 R50	11	988	983	181	176	807	807	314	204	350	98	97
MTS 25-30 R60	4	825	820	181	176	644	644	220	134	250	54	52
MTS 25-40 R60	5.5	864	859	181	176	683	683	220	134	300	63	62
MTS 25-50 R60	7.5	852	847	181	176	671	671	260	159	300	69	68
MTS 25-60 R60	7.5	852	847	181	176	671	671	260	159	300	69	68
MTS 25-70 R60	11	988	983	181	176	807	807	314	204	350	98	97
MTS 25-80 R60	11	988	983	181	176	807	807	314	204	350	98	97
MTS 25-90 R60	11	988	983	181	176	807	807	314	204	350	98	97
MTS 25-100 R60	15	988	983	181	176	807	807	314	204	350	110	108

MTS 32, 60 Hz

Performance range

Performance data at 1 mm²/s (emulsion)

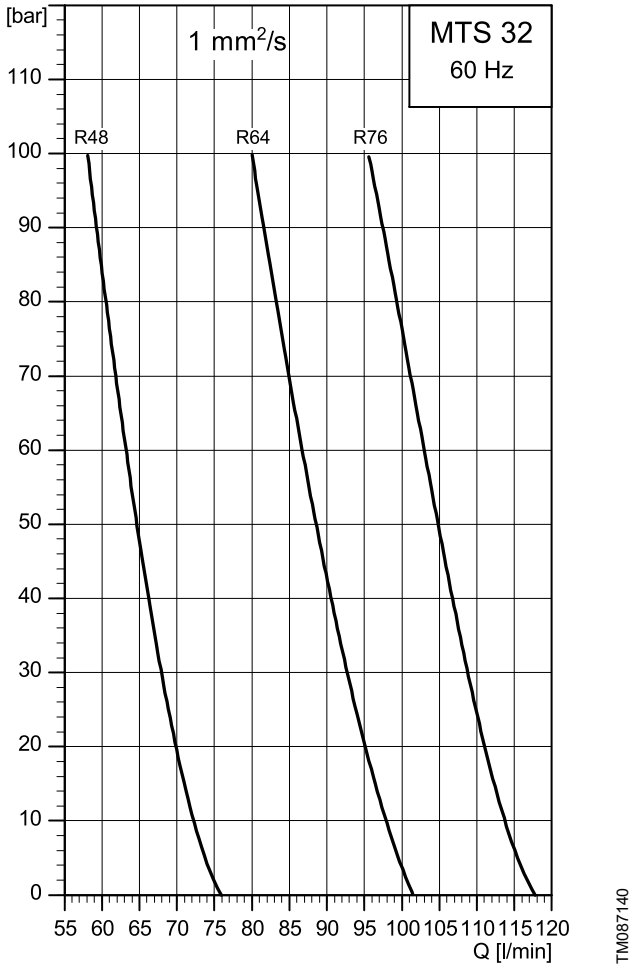

Performance data at 20 mm²/s (cutting oil with EP additives)

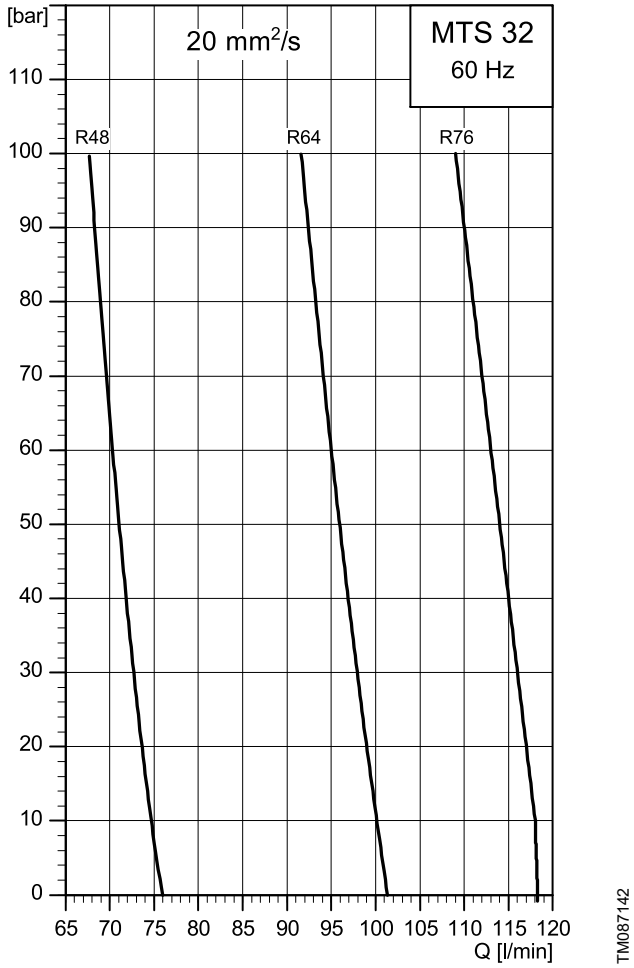

Pressure [bar]	1 mm²/s (emulsion)						20 mm²/s (cutting oil with EP additives)					
	R48		R64		R76		R48		R64		R76	
	Q	P	Q	P	Q	P	Q	P	Q	P	Q	P
	[l/min]	[kW]	[l/min]	[kW]	[l/min]	[kW]	[l/min]	[kW]	[l/min]	[kW]	[l/min]	[kW]
10	71.8	1.6	98.1	2.3	113	2.8	74.6	1.6	100	2.3	118	2.8
20	69.9	3	94.9	4.2	111	5	73.6	3	99	4.2	117	5
30	68.1	4.4	92.7	6.1	109	7.2	72.7	4.4	98	6.1	116	7.2
40	66.3	5.8	90.6	7.9	107	9.5	71.9	5.8	96.9	7.9	115	9.5
50	64.7	7.2	88.6	9.8	105	11.7	71.1	7.2	95.9	9.8	114	11.7
60	63.2	8.6	86.7	11.7	103	13.9	70.3	8.6	95	11.7	113	13.9
70	61.8	10	84.9	13.6	101	16.2	69.6	10	94.1	13.6	112	16.2
80	60.4	11.4	83.2	15.5	99	18.4	68.9	11.4	93.2	15.5	111	18.4
90	59.2	12.8	81.5	17.4	97.3	20.6	68.3	12.8	92.4	17.4	110	20.6
100	58.1	14.2	80	19.2	95.6	22.9	67.7	14.2	91.6	19.2	109	22.9

Dimensional sketch

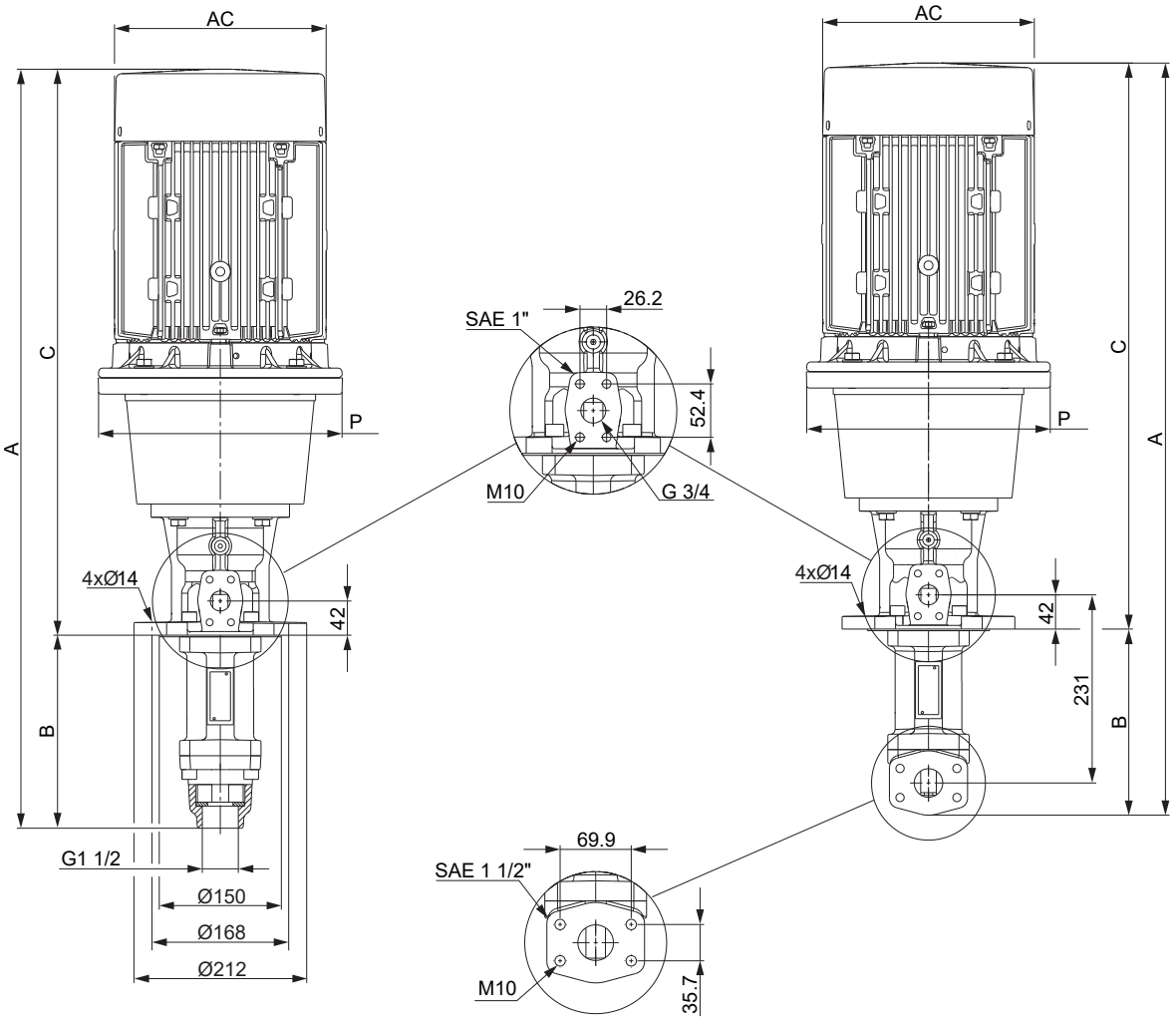

Tank-top installation (left), dry installation (right)

Dimensions and weights

Pump type	P2 [kW]	Dimensions [mm]									Net weight [kg]	
		A		B		C		AC	AD	P	Tank-top	Dry
		Tank-top	Dry	Tank-top	Dry	Tank-top	Dry					
MTS 32-30 R48	5.5	944	934	237	227	707	707	220	134	300	79	73
MTS 32-40 R48	7.5	932	922	237	227	695	695	260	159	300	85	79
MTS 32-50 R48	7.5	932	922	237	227	695	695	260	159	300	85	79
MTS 32-60 R48	11	1068	1058	237	227	831	831	314	204	350	113	109
MTS 32-70 R48	11	1068	1058	237	227	831	831	314	204	350	113	109
MTS 32-80 R48	15	1068	1058	237	227	831	831	314	204	350	125	120

Pump type	P2 [kW]	Dimensions [mm]									Net weight [kg]	
		A		B		C		AC	AD	P	Tank-top	Dry
		Tank-top	Dry	Tank-top	Dry	Tank-top	Dry					
MTS 32-90 R48	15	1068	1058	237	227	831	831	314	204	350	125	120
MTS 32-100 R48	15	1068	1058	237	227	831	831	314	204	350	125	120
MTS 32-30 R64	7.5	932	922	237	227	695	695	260	159	300	85	79
MTS 32-40 R64	11	1068	1058	237	227	831	831	314	204	350	113	109
MTS 32-50 R64	11	1068	1058	237	227	831	831	314	204	350	113	109
MTS 32-60 R64	15	1068	1058	237	227	831	831	314	204	350	125	120
MTS 32-70 R64	15	1068	1058	237	227	831	831	314	204	350	125	120
MTS 32-80 R64	18.5	1112	1102	237	227	875	875	314	204	350	132	127
MTS 32-90 R64	18.5	1112	1102	237	227	875	875	314	204	350	132	127
MTS 32-100 R64	22	1206	1196	237	227	969	969	314	204	350	208	203
MTS 32-30 R76	7.5	932	922	237	227	695	695	260	159	300	85	79
MTS 32-40 R76	11	1068	1058	237	227	831	831	314	204	350	113	109
MTS 32-50 R76	15	1068	1058	237	227	831	831	314	204	350	125	120
MTS 32-60 R76	15	1068	1058	237	227	831	831	314	204	350	125	120
MTS 32-70 R76	18.5	1112	1102	237	227	875	875	314	204	350	132	127
MTS 32-80 R76	22	1206	1196	237	227	969	969	314	204	350	208	203
MTS 32-90 R76	22	1206	1196	237	227	969	969	314	204	350	208	203

MTSE 25, 3×380-500 V, 50/60 Hz

MTSE 25 R34, 50/60 Hz

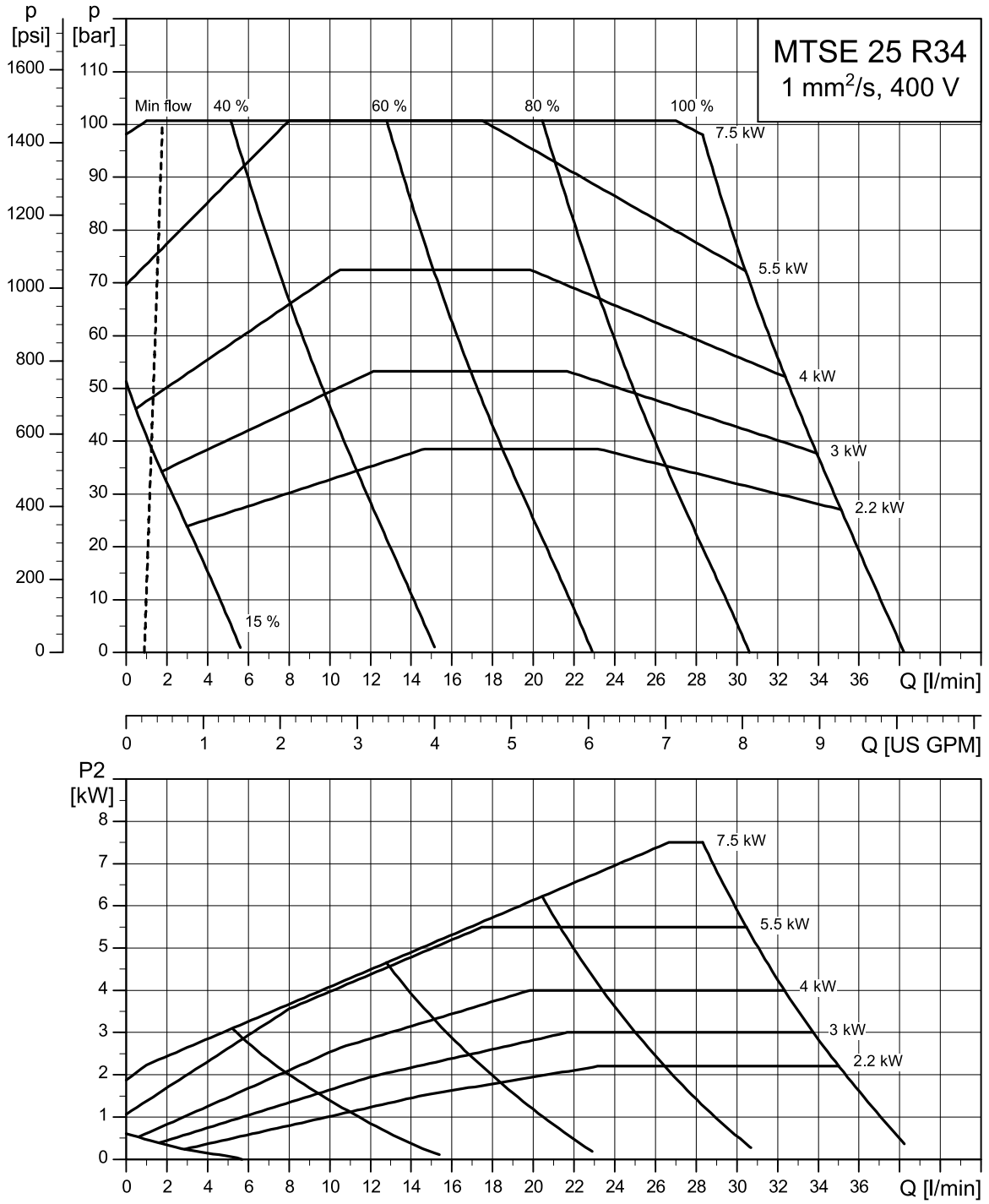

Dimensional sketch

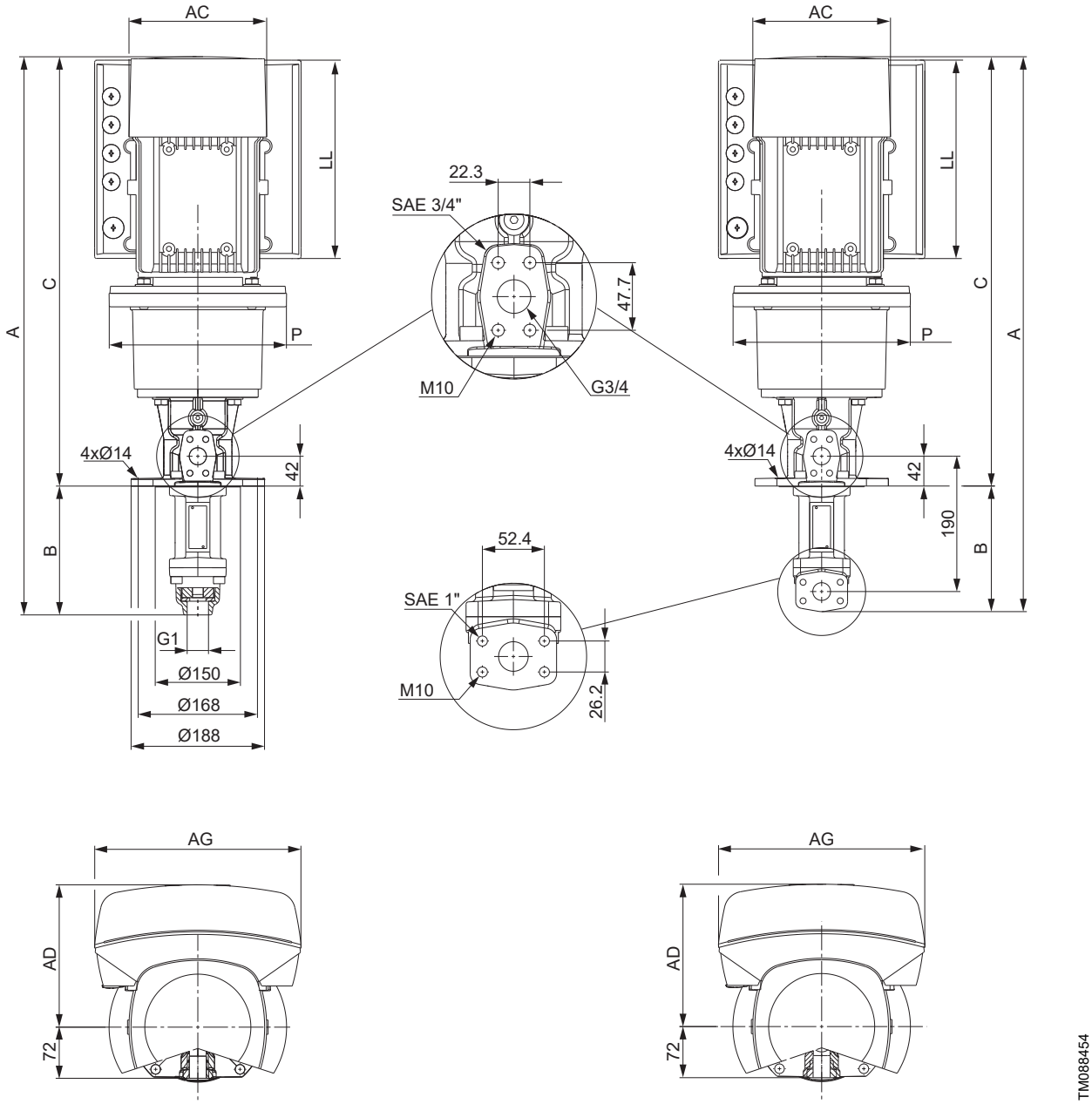

Tank-top installation (left), dry installation (right)

Dimensions and weights
MTSE 25 R34 3×380-500 V

Pump type	P2 [kW]	Dimensions [mm]											Net weight [kg]	
		A		B		C		AC	AD	AG	LL	P		
		Tank-top	Dry	Tank-top	Dry	Tank-top	Dry						Tank-top	Dry
25-39	2.2	732	727	181	176	551	551	122	158	268	232	200	41	39
25-54	3	787	782	181	176	606	606	191	201	291	280	250	44	42
25-73	4	787	782	181	176	606	606	191	201	291	280	250	54	52
25-100	5.5	838	833	181	176	657	657	191	201	291	280	300	63	61
25-100	7.5	862	857	181	176	681	681	255	237	346	317	300	63	61

MTSE 25 R38, 50/60 Hz

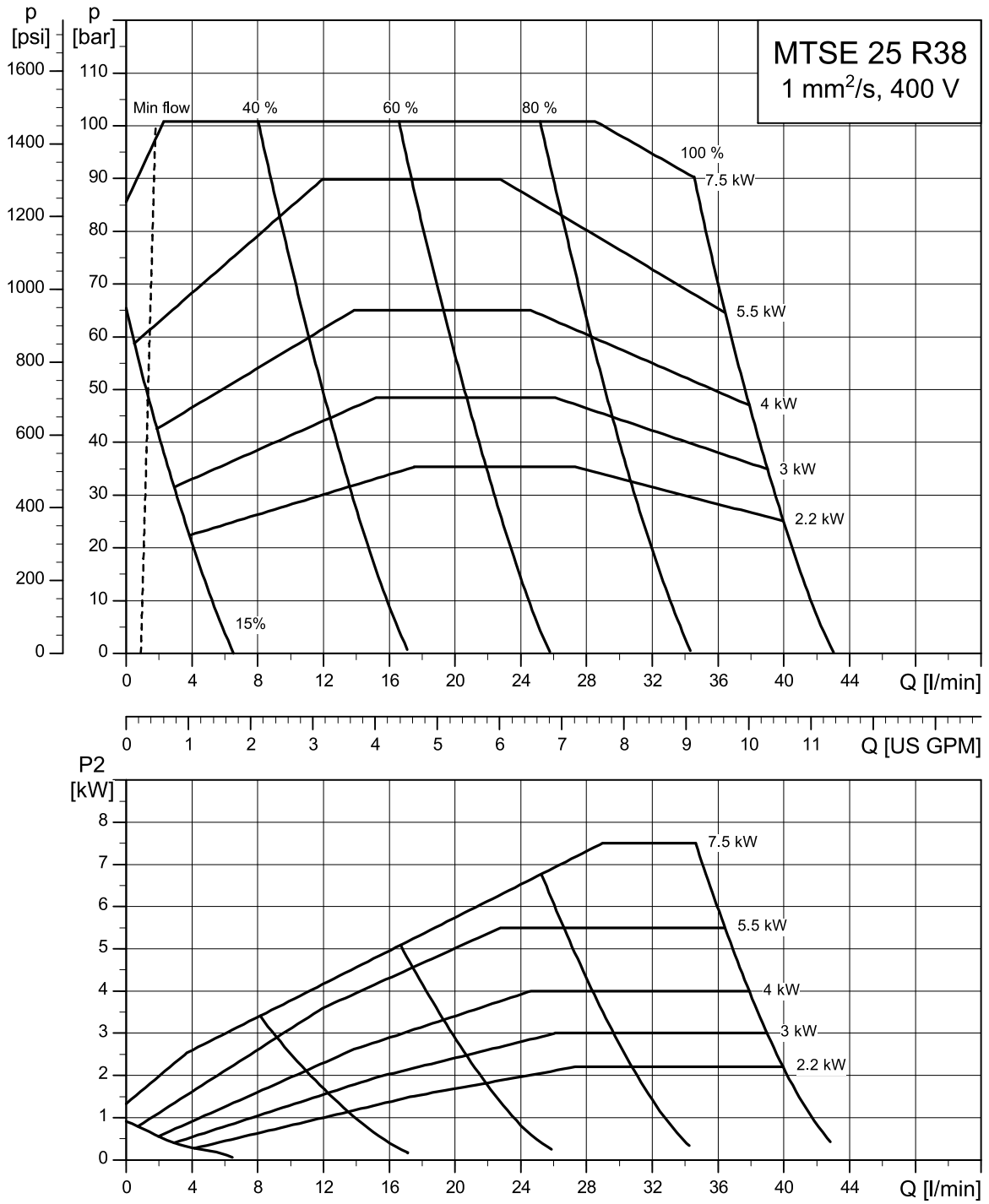

Dimensional sketch

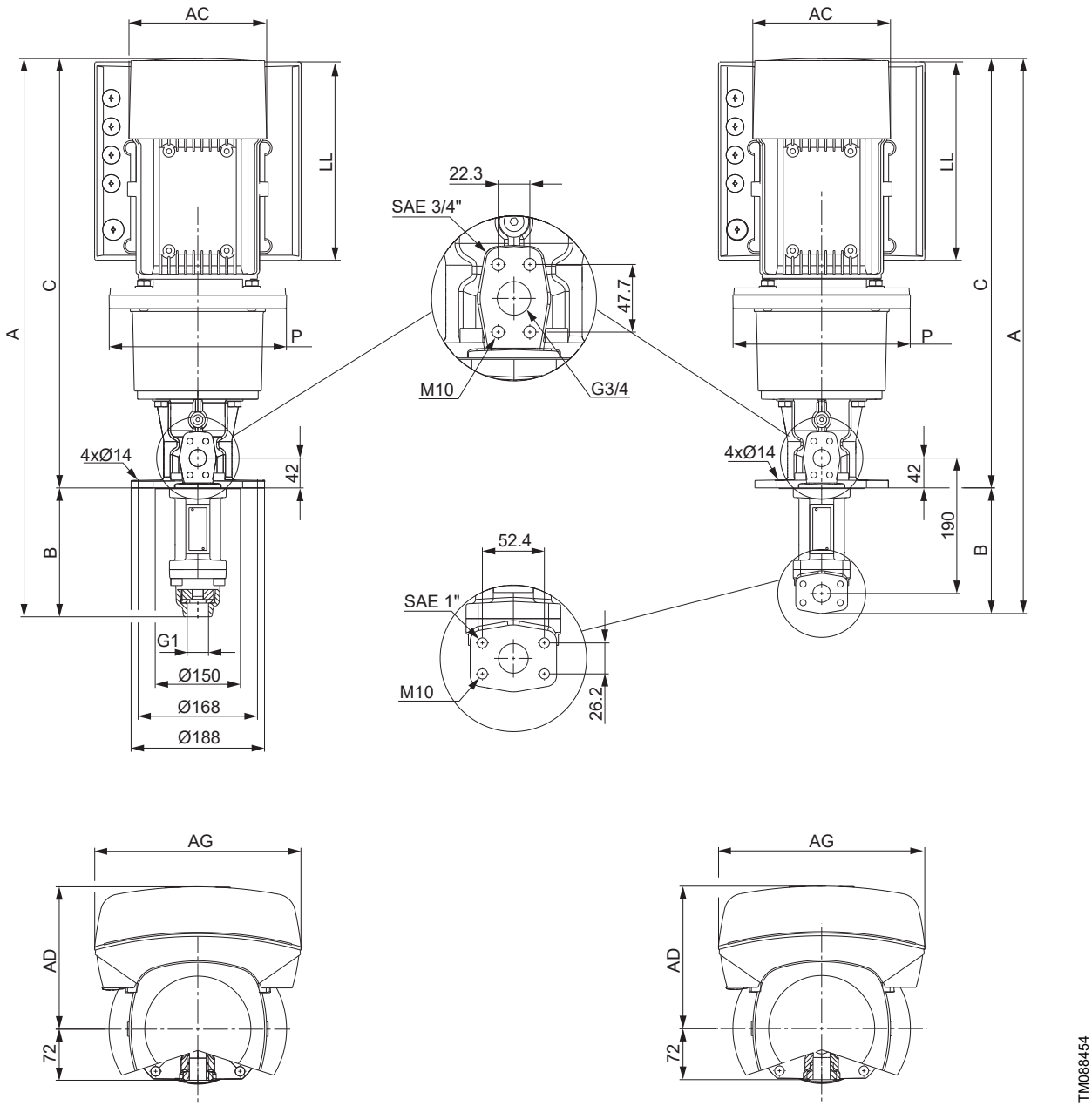

Tank-top installation (left), dry installation (right)

Dimensions and weights
MTSE 25 R38 3×380-500 V

Pump type	P2 [kW]	Dimensions [mm]											Net weight [kg]	
		A		B		C		AC	AD	AG	LL	P		
		Tank-top	Dry	Tank-top	Dry	Tank-top	Dry						Tank-top	Dry
25-35	2.2	732	727	181	176	551	551	122	158	268	232	200	41	39
25-48	3	787	782	181	176	606	606	191	201	291	280	250	44	42
25-65	4	787	782	181	176	606	606	191	201	291	280	250	54	52
25-90	5.5	838	833	181	176	657	657	191	201	291	280	300	63	61
25-100	7.5	862	857	181	176	681	681	255	237	346	317	300	63	61

MTSE 25 R50, 50/60 Hz

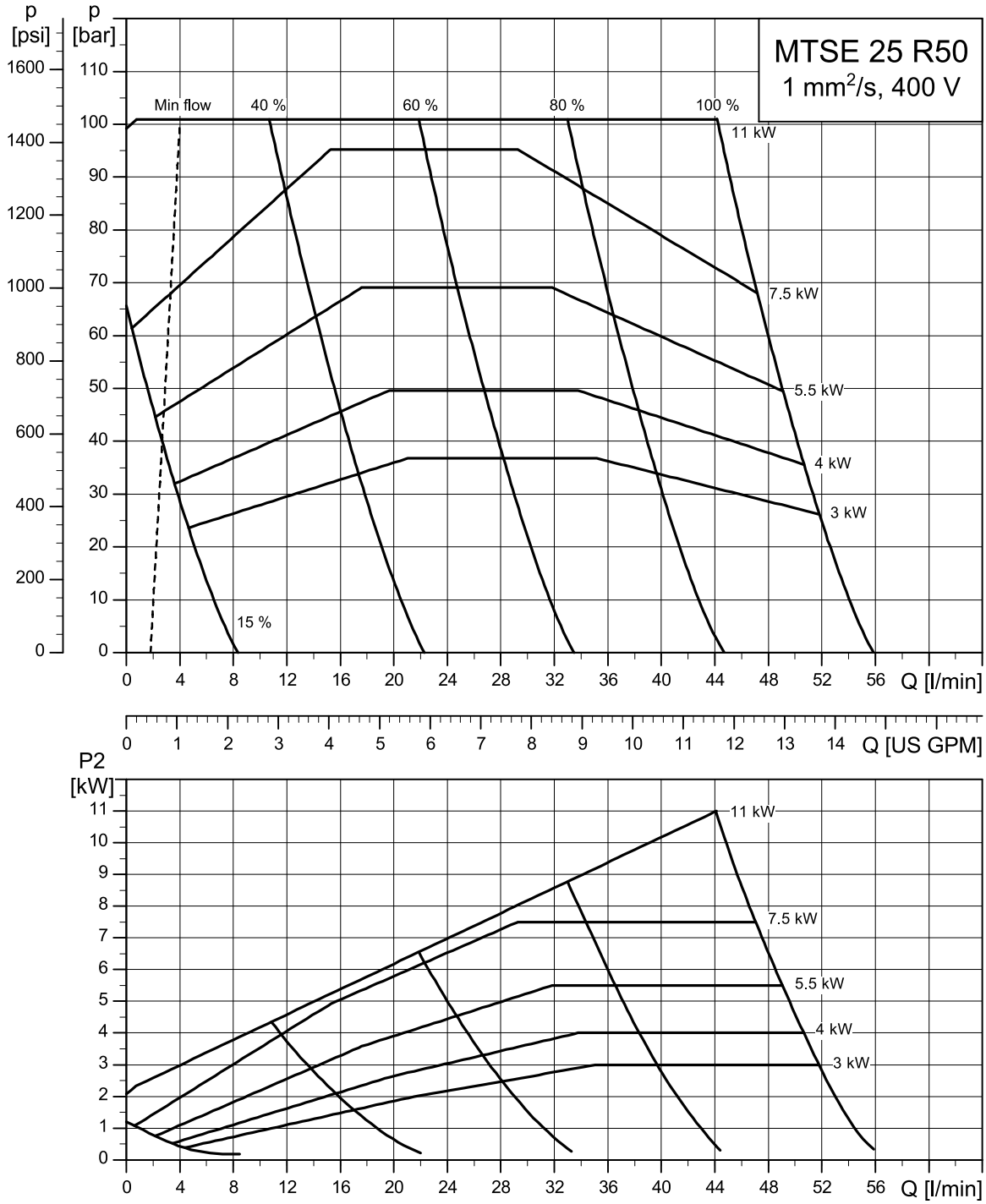

Dimensional sketch

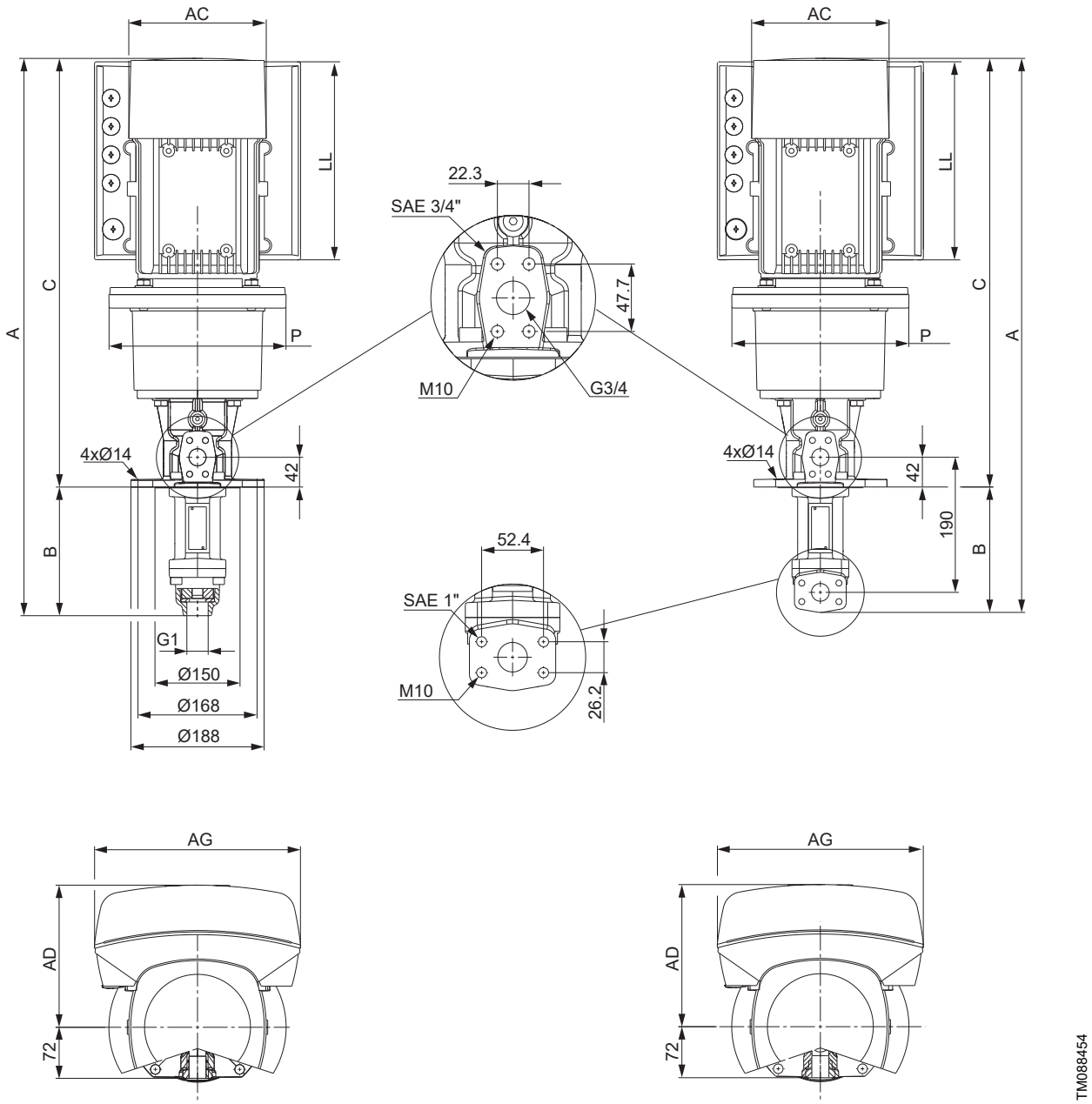

Tank-top installation (left), dry installation (right)

Dimensions and weights
MTSE 25 R50 3×380-500 V

Pump type	P2 [kW]	Dimensions [mm]											Net weight [kg]	
		A		B		C		AC	AD	AG	LL	P		
		Tank-top	Dry	Tank-top	Dry	Tank-top	Dry						Tank-top	Dry
25-37	3	787	782	181	176	606	606	191	201	291	280	250	44	42
25-50	4	787	782	181	176	606	606	191	201	291	280	250	54	52
25-69	5.5	838	833	181	176	657	657	191	201	291	280	300	63	61
25-95	7.5	862	857	181	176	681	681	255	237	346	317	300	63	61
25-100	11	912	907	181	176	731	731	255	237	346	317	350	98	96

MTSE 25 R60, 50/60 Hz

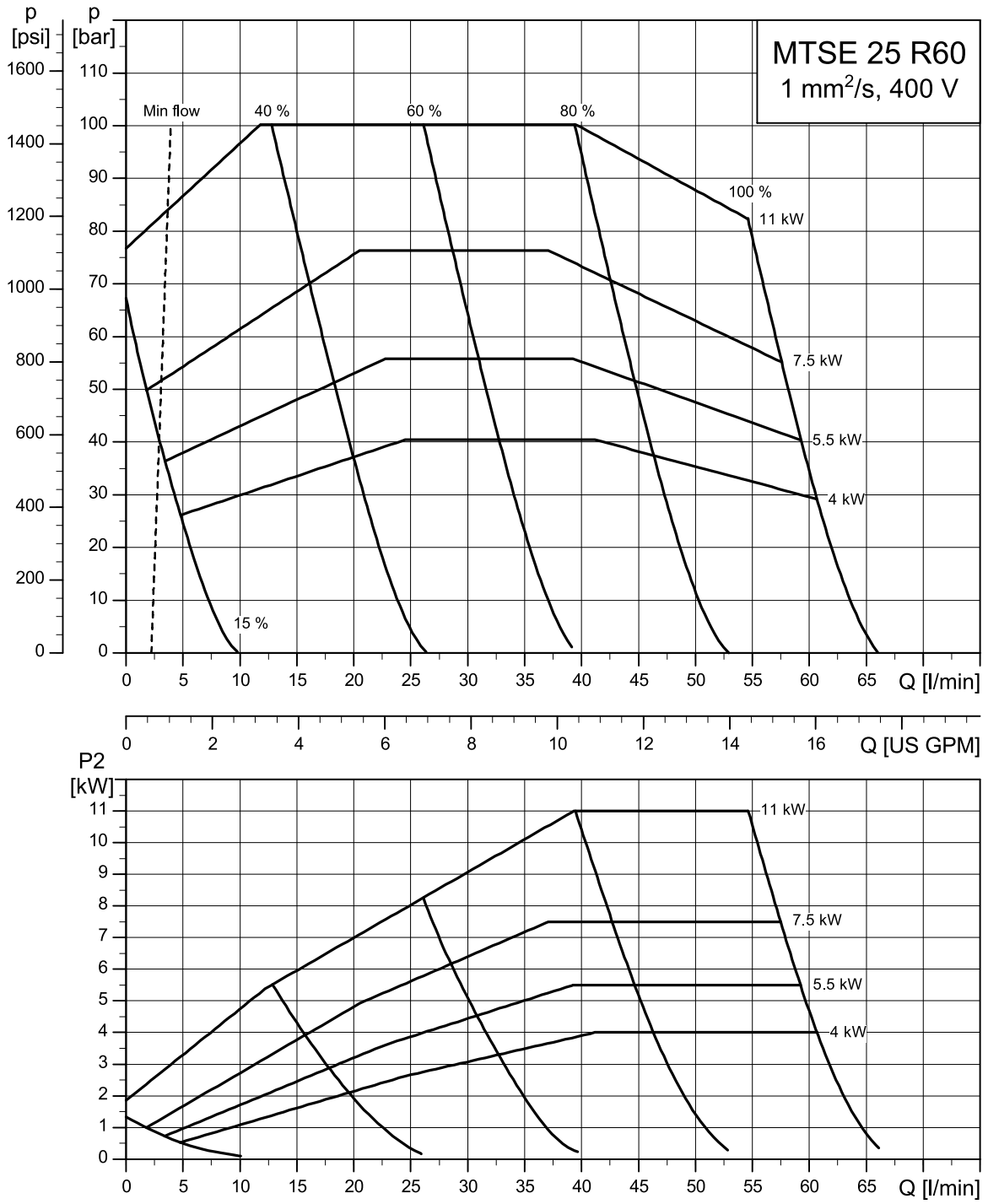

TM091088

Dimensional sketch

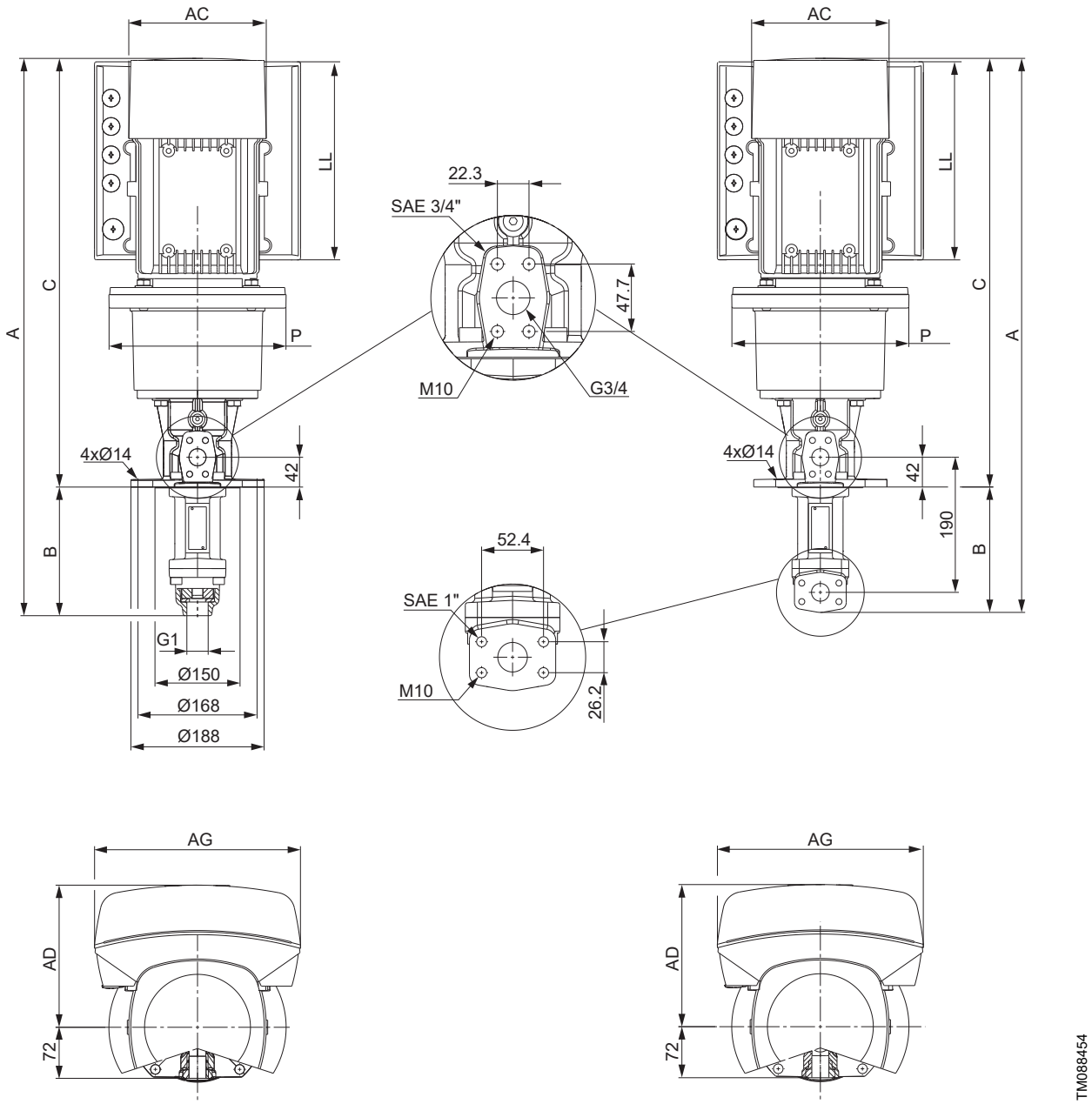

Tank-top installation (left), dry installation (right)

Dimensions and weights
MTSE 25 R60 3×380-500 V

Pump type	P2 [kW]	Dimensions [mm]											Net weight [kg]	
		A		B		C		AC	AD	AG	LL	P		
		Tank-top	Dry	Tank-top	Dry	Tank-top	Dry						Tank-top	Dry
25-37	3	787	782	181	176	606	606	191	201	291	280	250	44	42
25-40	4	787	782	181	176	606	606	191	201	291	280	250	54	52
25-55	5.5	838	833	181	176	657	657	191	201	291	280	300	63	61
25-76	7.5	862	857	181	176	681	681	255	237	346	317	300	63	61
25-100	11	912	907	181	176	731	731	255	237	346	317	350	98	96

MTSE 32, 3×380-500 V, 50/60 Hz

MTSE 32 R48, 50/60 Hz

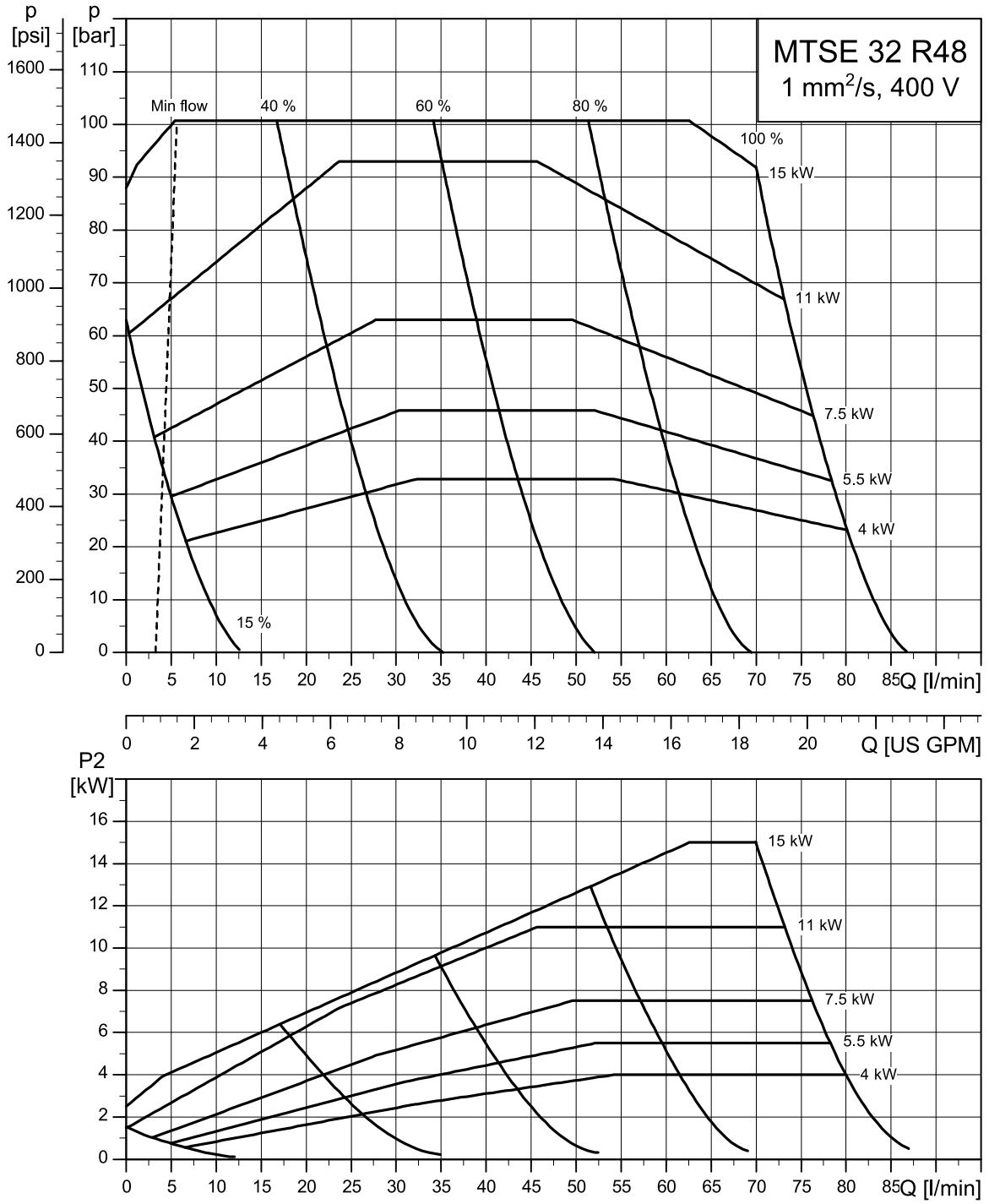

Dimensional sketch

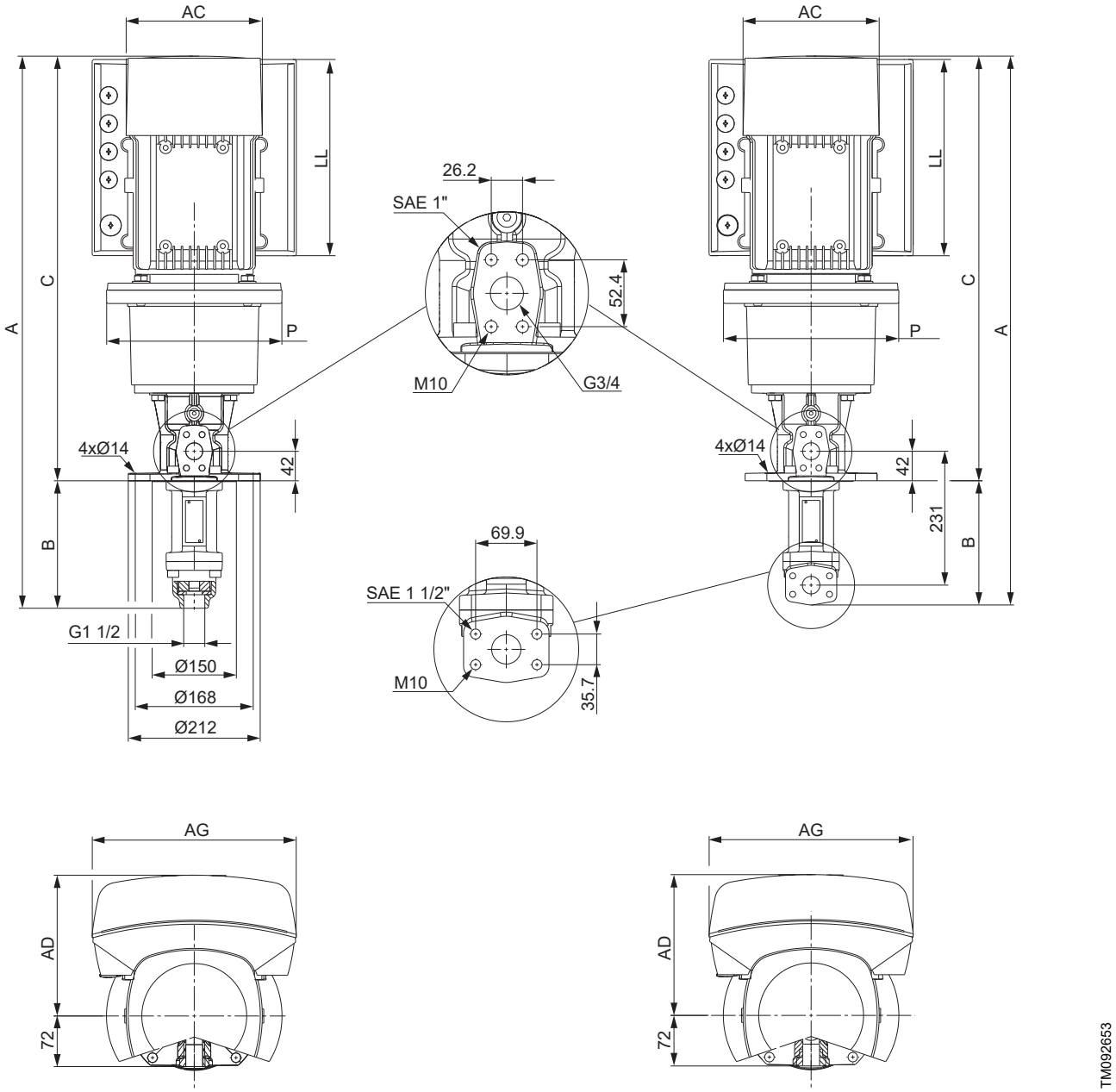

Tank-top installation (left), dry installation (right)

Dimensions and weights
MTSE 32 R48 3×380-500 V

Pump type	P2 [kW]	Dimensions [mm]											Net weight [kg]	
		A		B		C		AC	AD	AG	LL	P		
		Tank-top	Dry	Tank-top	Dry	Tank-top	Dry						Tank-top	Dry
32-33	4	867	857	237	227	630	630	191	201	291	280	250	70	65
32-46	5.5	918	908	237	227	681	681	191	201	291	280	300	79	74
32-63	7.5	942	932	237	227	705	705	255	237	346	317	300	79	74
32-93	11	992	982	237	227	755	755	255	237	346	317	350	125	120
32-100	15	1068	1058	237	227	831	831	314	303	420	414	350	125	120

MTSE 32 R64, 50/60 Hz

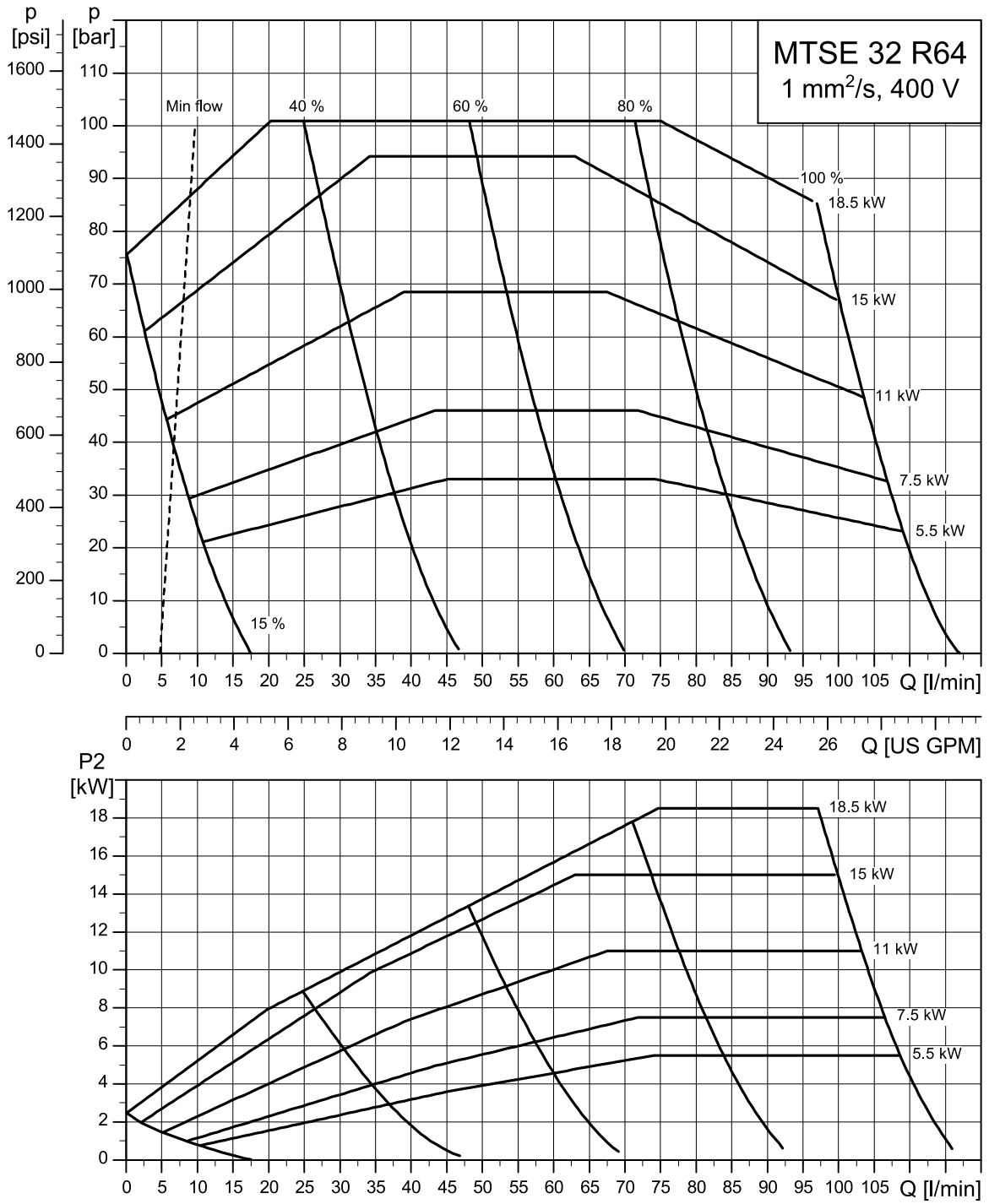

Dimensional sketch

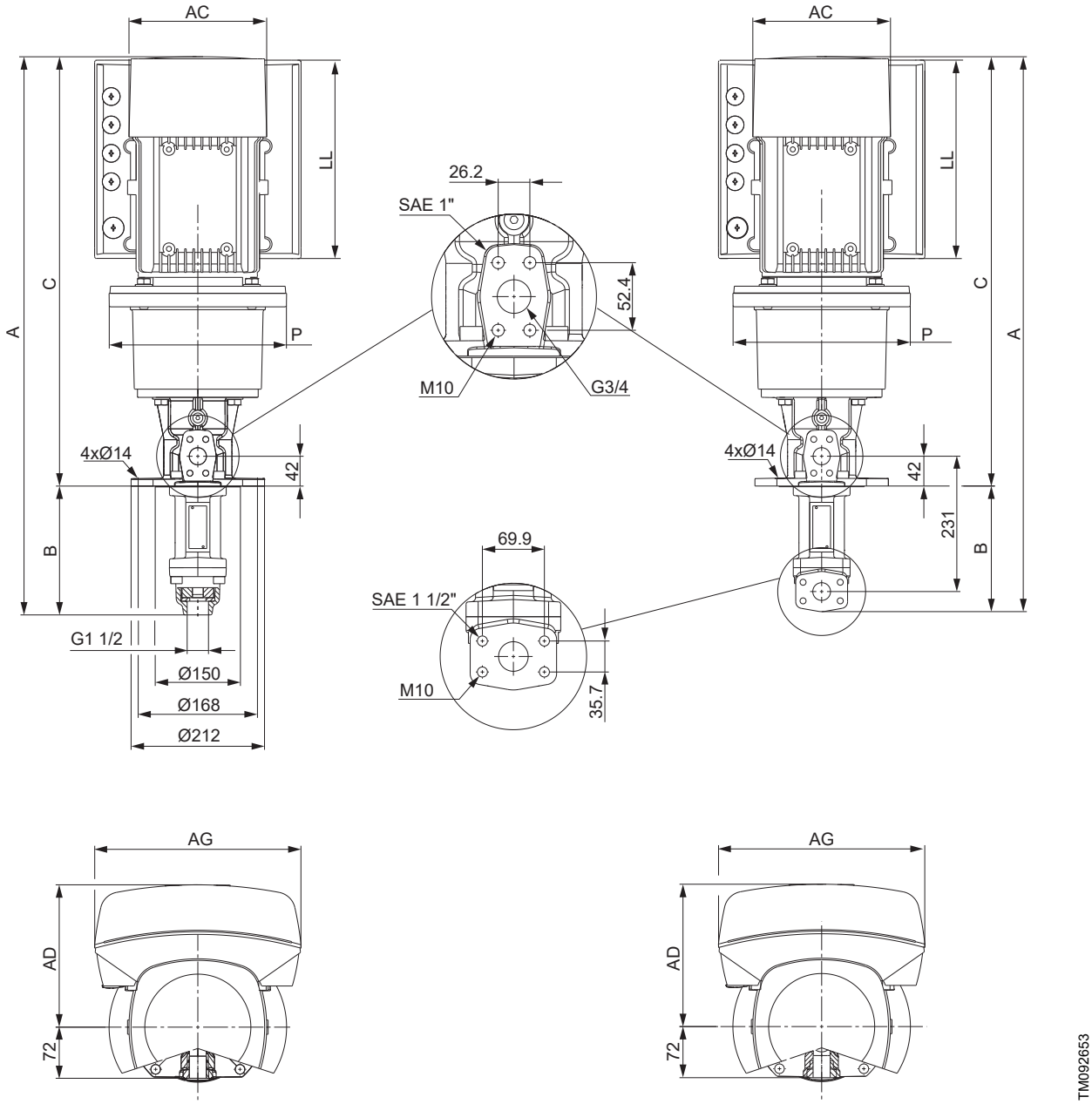

Tank-top installation (left), dry installation (right)

Dimensions and weights
MTSE 32 R64 3×380-500 V

Pump type	P2 [kW]	Dimensions [mm]											Net weight [kg]	
		A		B		C		AC	AD	AG	LL	P		
		Tank-top	Dry	Tank-top	Dry	Tank-top	Dry						Tank-top	Dry
32-33	5.5	918	908	237	227	681	681	191	201	291	280	300	79	74
32-46	7.5	942	932	237	227	705	705	255	237	346	317	300	79	74
32-68	11	992	982	237	227	755	755	255	237	346	317	350	125	120
32-94	15	1068	1058	237	227	831	831	314	303	420	414	350	125	120
32-100	18.5	1068	1058	237	227	831	831	314	303	420	414	350	132	127

MTSE 32 R76, 50/60 Hz

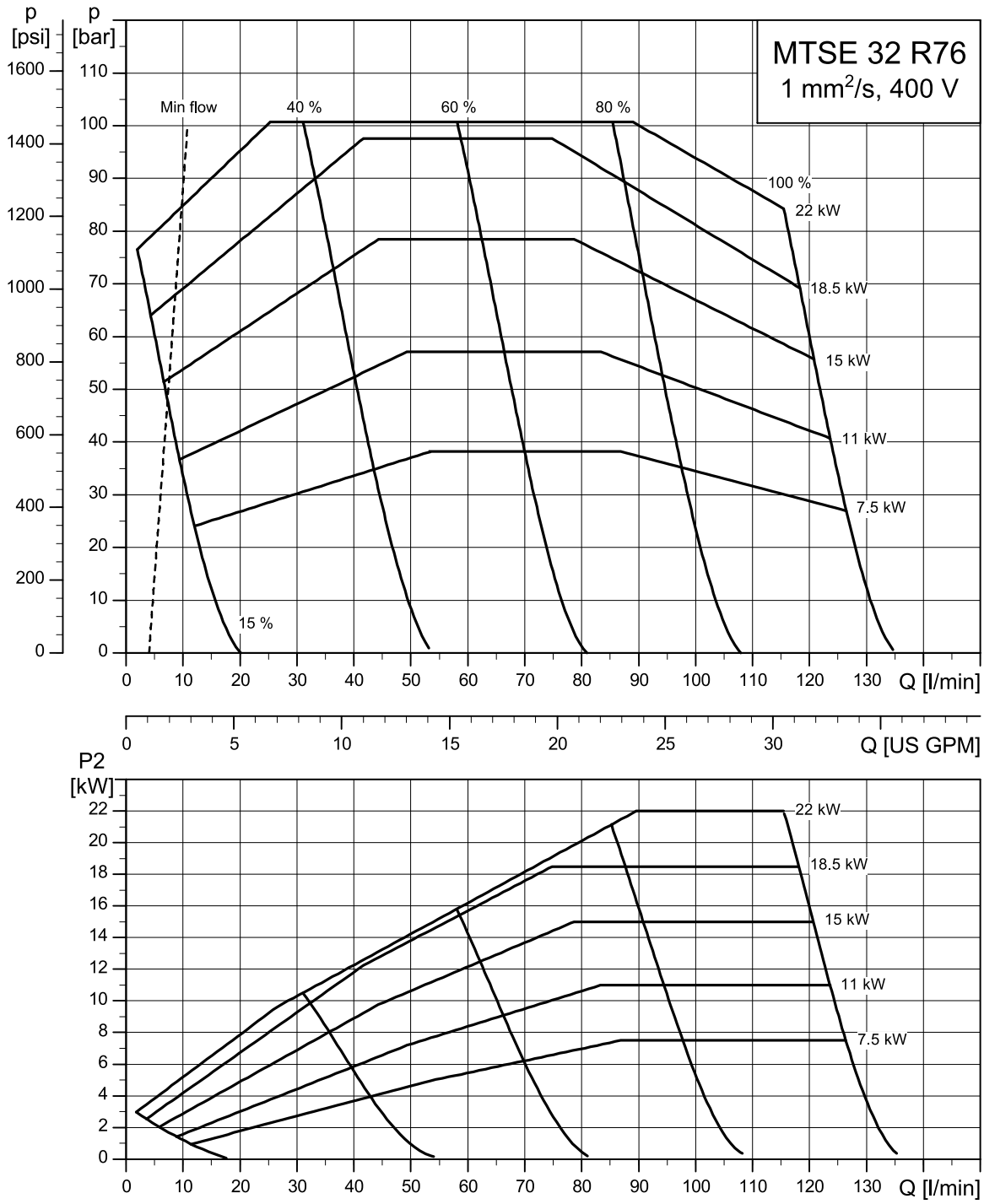

Dimensional sketch

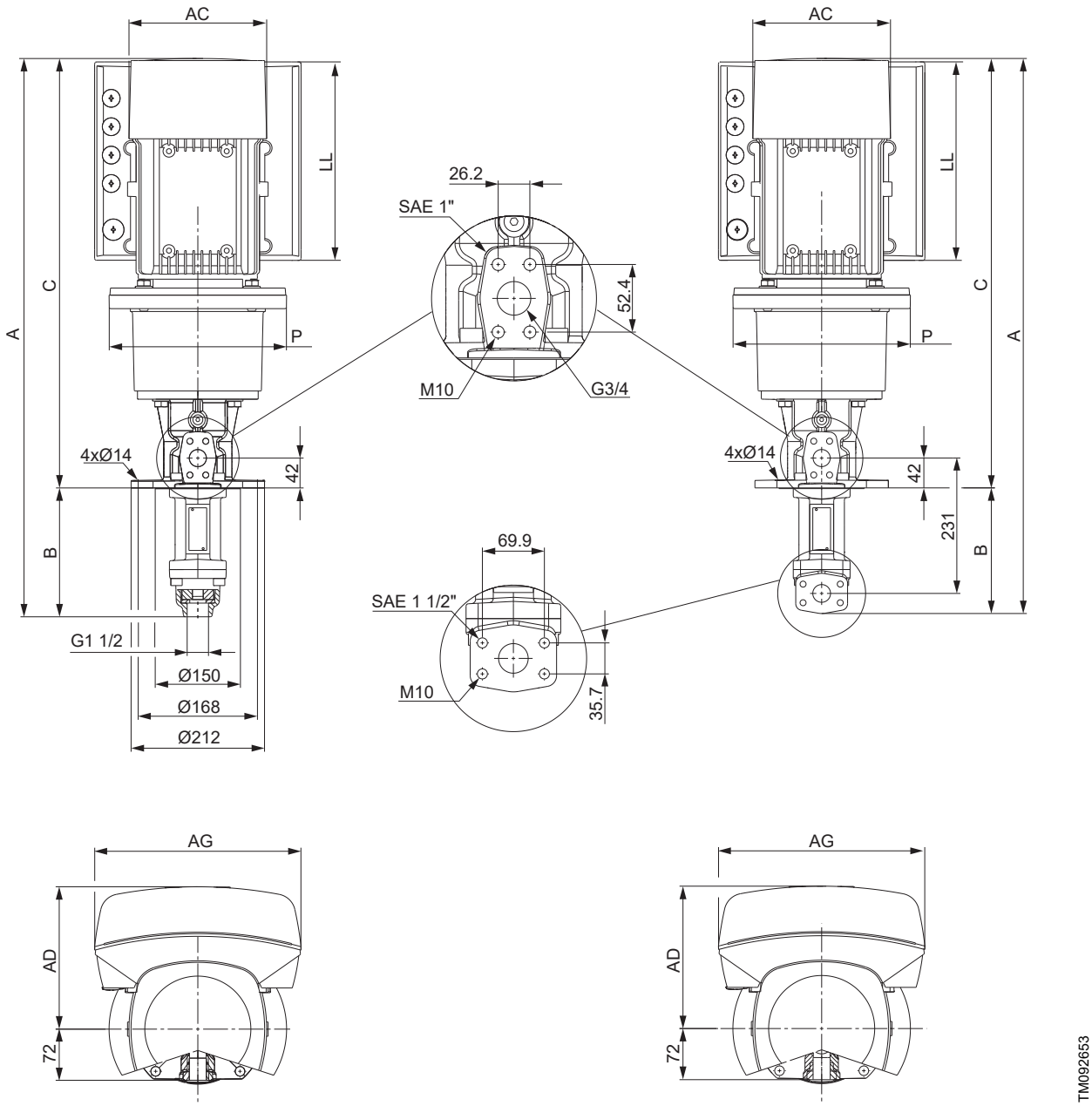

Tank-top installation (left), dry installation (right)

Dimensions and weights
MTSE 32 R76 3×380-500 V

Pump type	P2 [kW]	Dimensions [mm]											Net weight [kg]	
		A		B		C		AC	AD	AG	LL	P		
		Tank-top	Dry	Tank-top	Dry	Tank-top	Dry						Tank-top	Dry
32-38	7.5	942	932	237	227	705	705	255	237	346	317	300	79	74
32-57	11	992	982	237	227	755	755	255	237	346	317	350	125	120
32-79	15	1068	1058	237	227	831	831	314	303	420	414	350	125	120
32-98	18.5	1068	1058	237	227	831	831	314	303	420	414	350	132	127
32-100	22	1110	1100	237	227	873	873	314	303	420	414	350	208	203

MTSE 25, 3×200-240 V, 50/60 Hz

MTSE 25 R34, 50/60 Hz

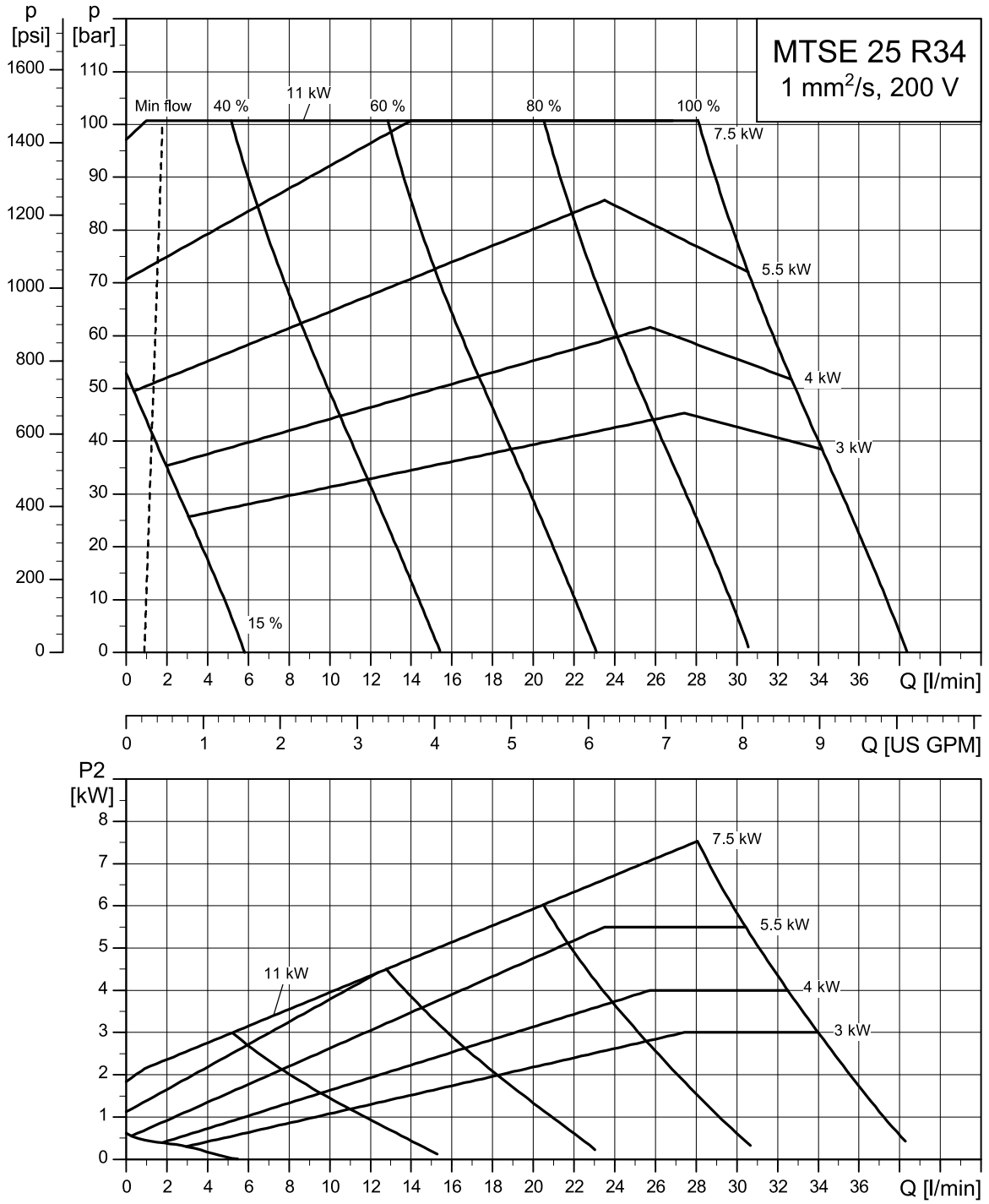

TM091081

Dimensional sketch

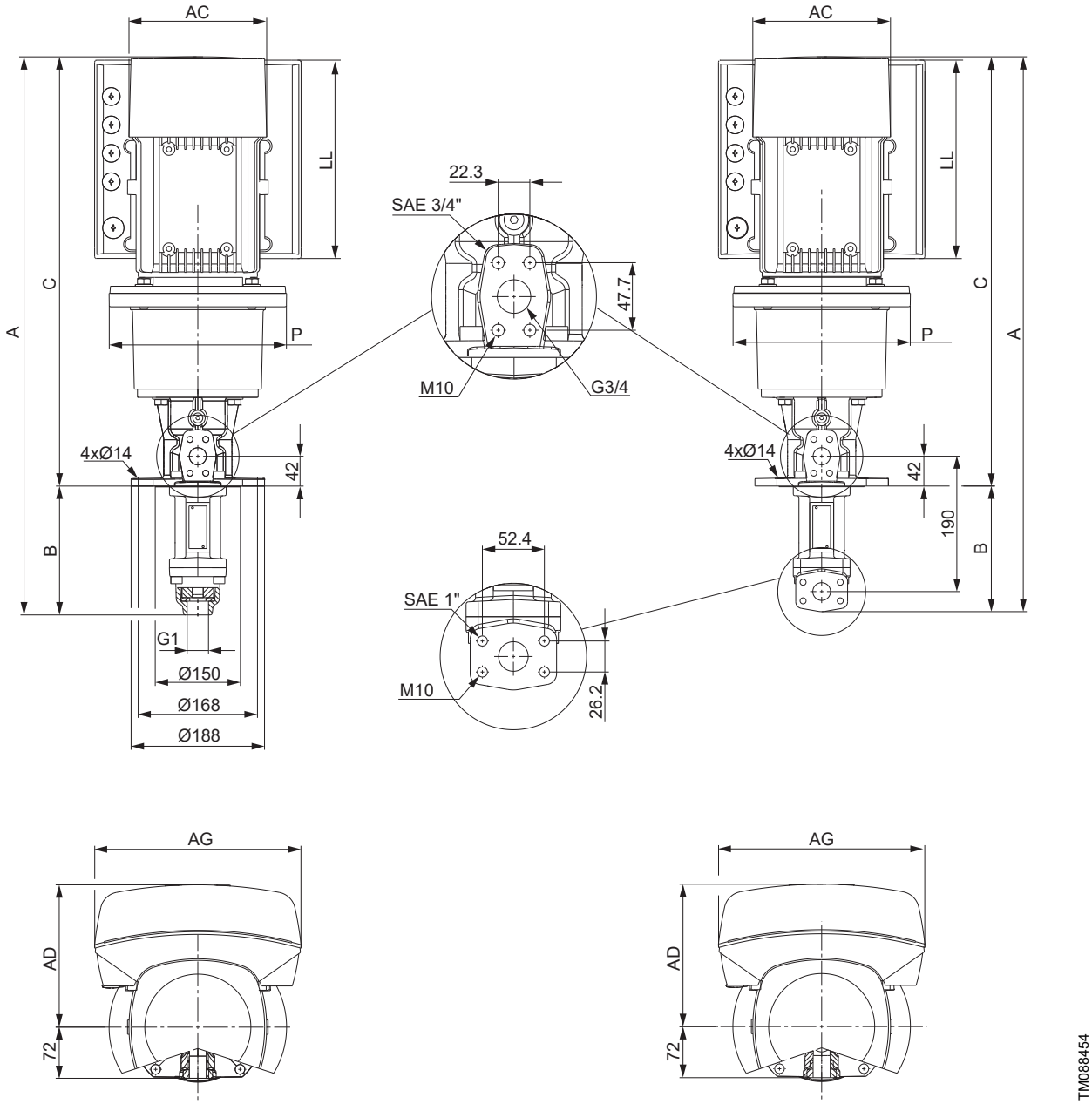

Tank-top installation (left), dry installation (right)

Dimensions and weights
MTSE 25 R34 3×200-240 V

Pump type	P2 [kW]	Dimensions [mm]											Net weight [kg]	
		A		B		C		AC	AD	AG	LL	P		
		Tank-top	Dry	Tank-top	Dry	Tank-top	Dry						Tank-top	Dry
25-45	3	787	782	181	176	606	606	191	201	291	280	250	44	42
25-62	4	787	782	181	176	606	606	191	201	291	280	250	54	52
25-86	5.5	862	857	181	176	681	681	255	237	346	317	300	63	61
25-100	7.5	988	983	181	176	807	807	314	303	420	414	350	98	96
25-100	11	988	983	181	176	807	807	314	303	420	414	350	98	96

MTSE 25 R38, 50/60 Hz

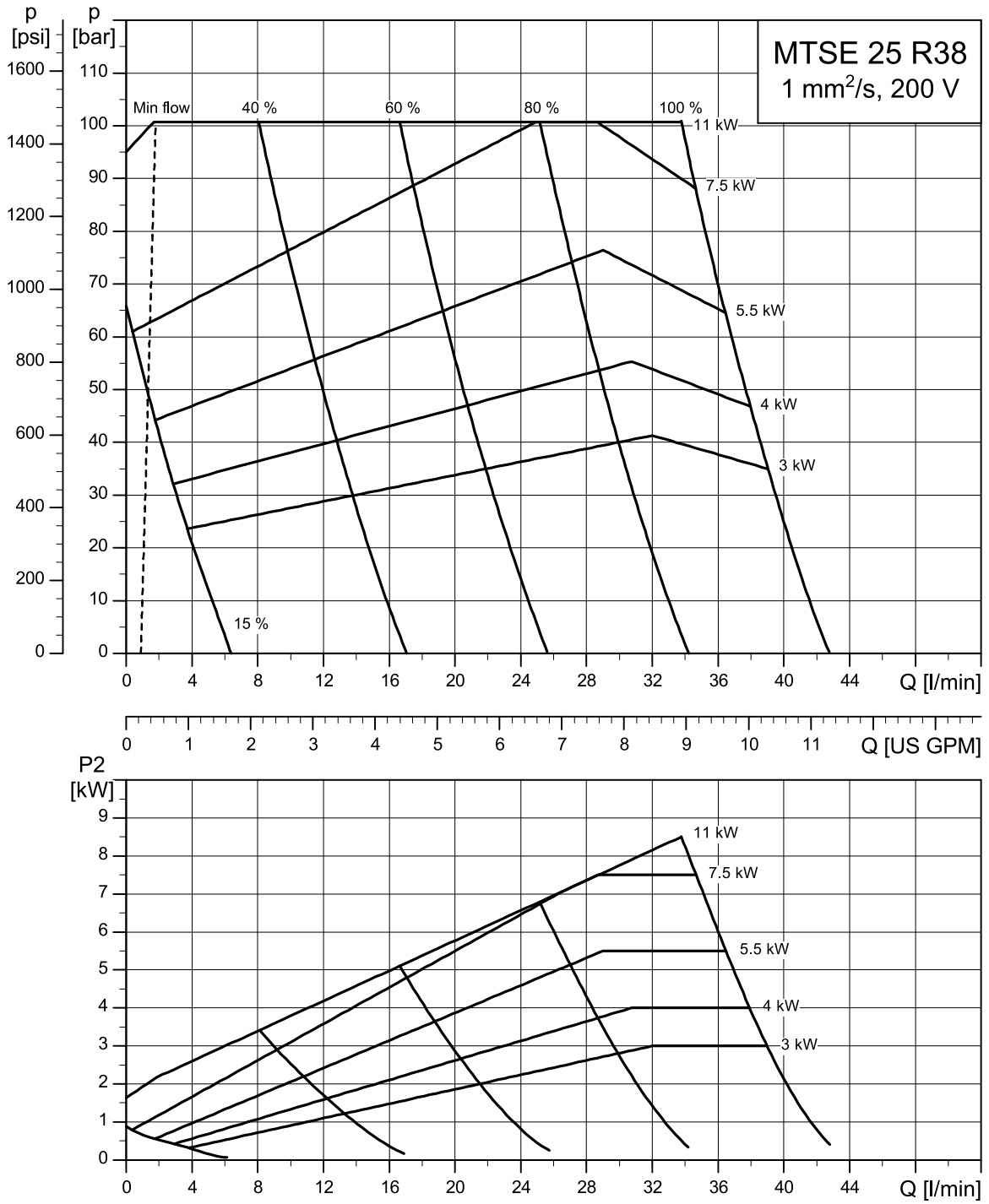

Dimensional sketch

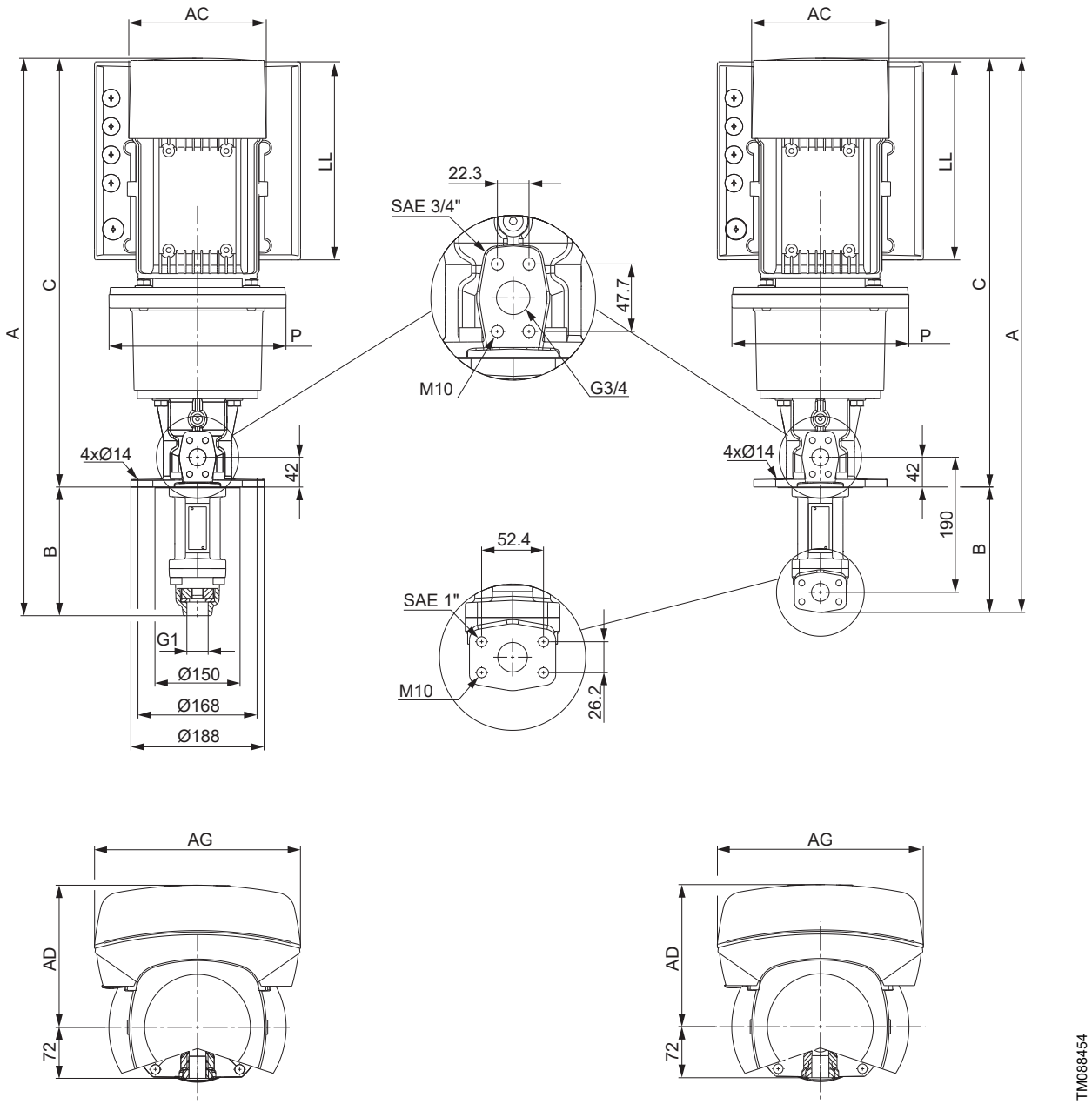

Tank-top installation (left), dry installation (right)

Dimensions and weights
MTSE 25 R38 3×200-240 V

Pump type	P2 [kW]	Dimensions [mm]											Net weight [kg]	
		A		B		C		AC	AD	AG	LL	P		
		Tank-top	Dry	Tank-top	Dry	Tank-top	Dry						Tank-top	Dry
25-41	3	787	782	181	176	606	606	191	201	291	280	250	44	42
25-55	4	787	782	181	176	606	606	191	201	291	280	250	54	52
25-77	5.5	862	857	181	176	681	681	255	237	346	317	300	63	61
25-100	7.5	988	983	181	176	807	807	314	303	420	414	350	98	96
25-100	11	988	983	181	176	807	807	314	303	420	414	350	98	96

MTSE 25 R50, 50/60 Hz

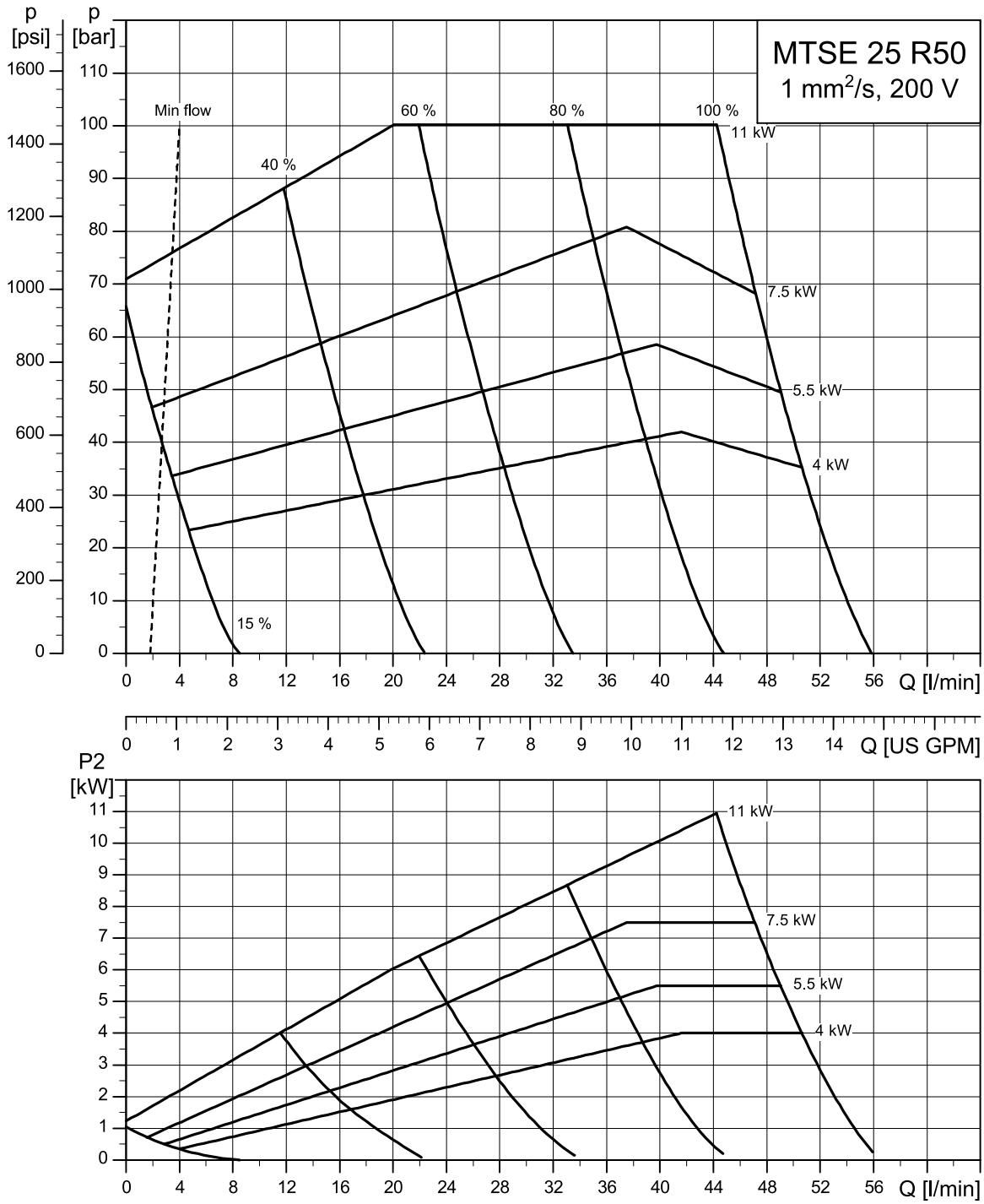

Dimensional sketch

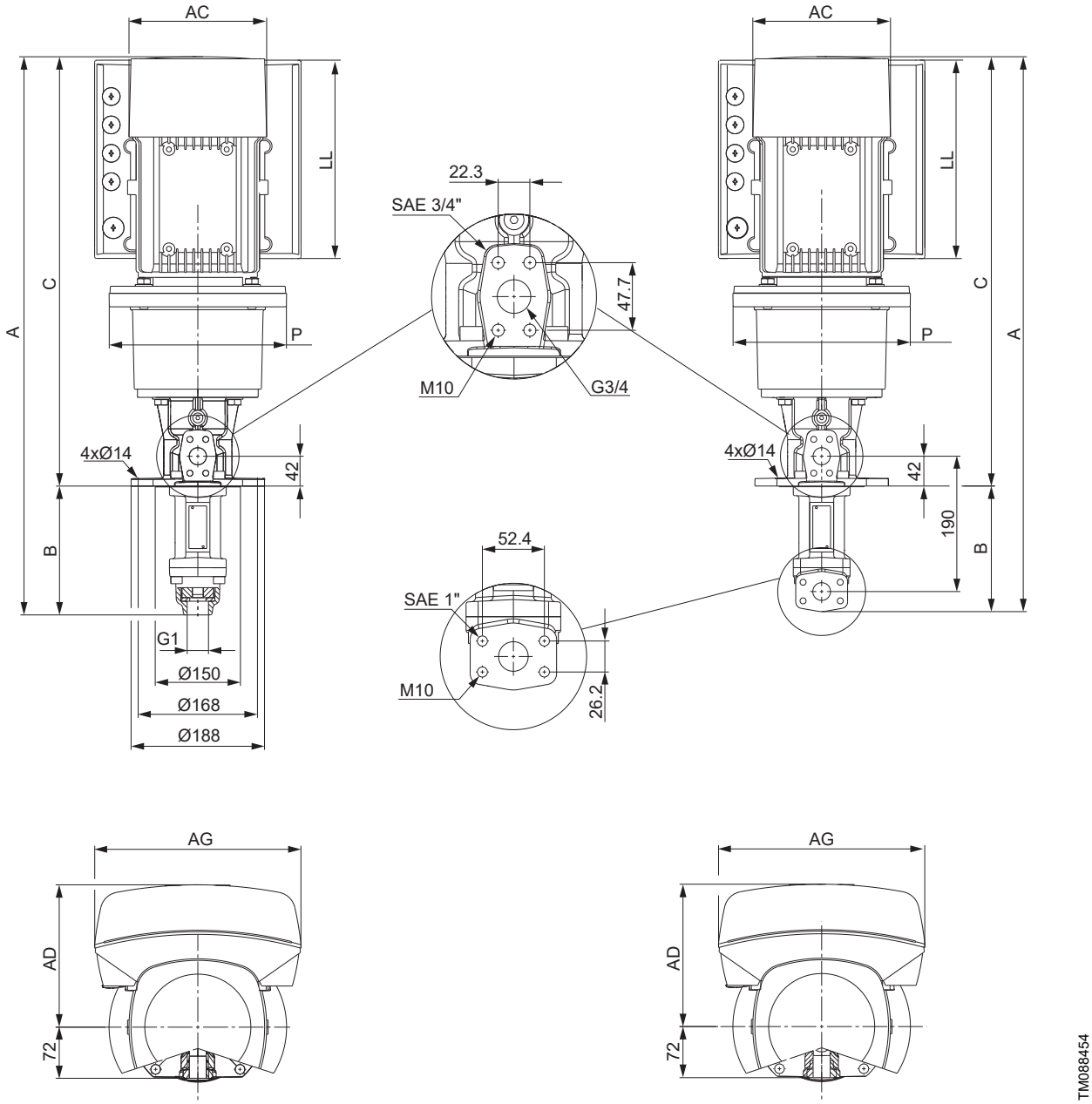

Tank-top installation (left), dry installation (right)

Dimensions and weights
MTSE 25 R50 3×200-240 V

Pump type	P2 [kW]	Dimensions [mm]											Net weight [kg]	
		A		B		C		AC	AD	AG	LL	P		
		Tank-top	Dry	Tank-top	Dry	Tank-top	Dry						Tank-top	Dry
25-42	4	787	782	181	176	606	606	191	201	291	280	250	54	52
25-58	5.5	862	857	181	176	681	681	255	237	346	317	300	63	61
25-81	7.5	988	983	181	176	807	807	314	303	420	414	350	98	96
25-100	11	988	983	181	176	807	807	314	303	420	414	350	98	96

MTSE 25 R60, 50/60 Hz

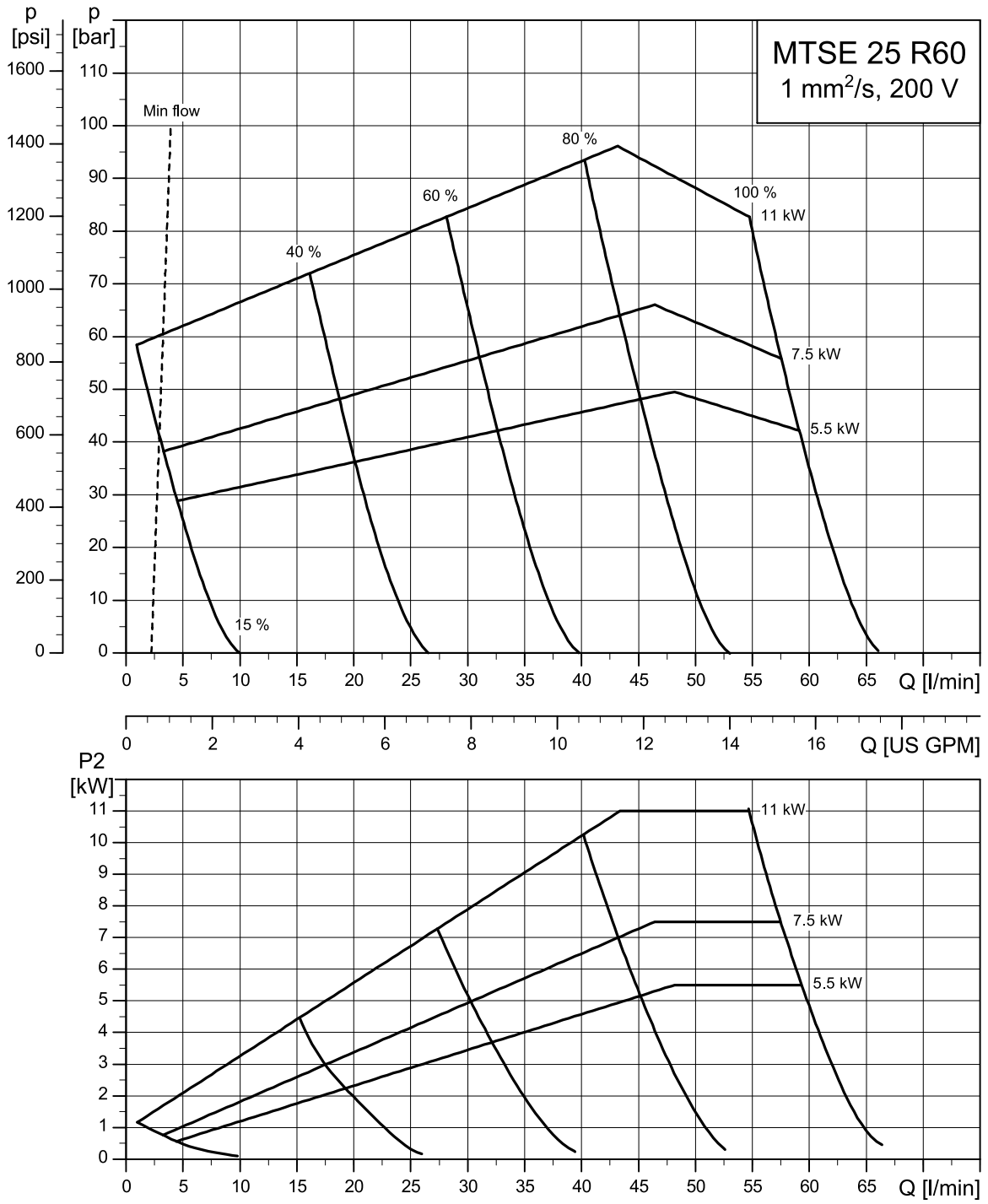

TM091087

Dimensional sketch

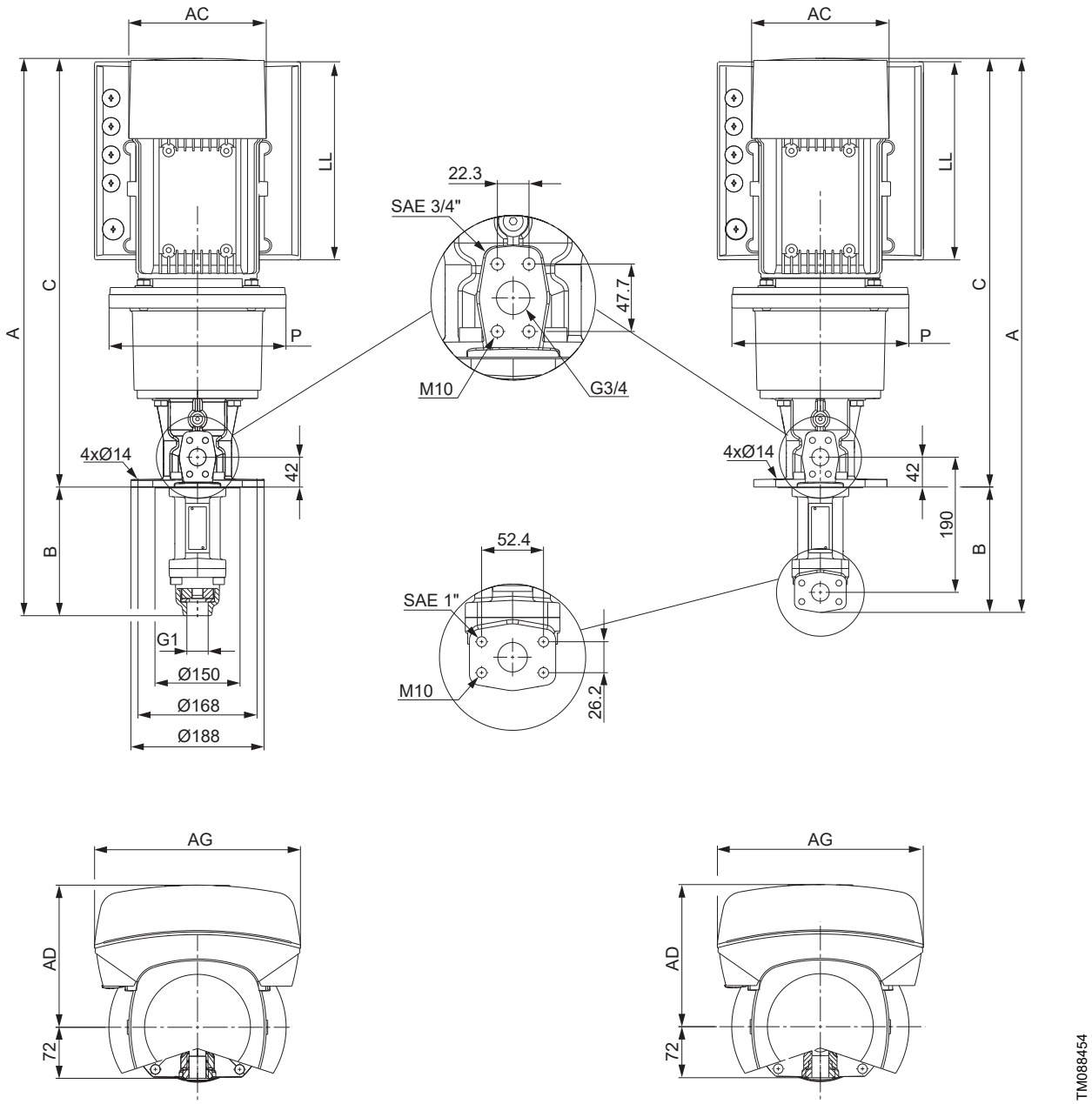

Tank-top installation (left), dry installation (right)

Dimensions and weights
MTSE 25 R60 3×200-240 V

Pump type	P2 [kW]	Dimensions [mm]											Net weight [kg]	
		A		B		C		AC	AD	AG	LL	P		
		Tank-top	Dry	Tank-top	Dry	Tank-top	Dry						Tank-top	Dry
25-48	5.5	862	857	181	176	681	681	255	237	346	317	300	63	61
25-65	7.5	988	983	181	176	807	807	314	303	420	414	350	98	96
25-96	11	988	983	181	176	807	807	314	303	420	414	350	98	96

MTSE 32, 3×200-240 V, 50/60 Hz

MTSE 32 R48, 50/60 Hz

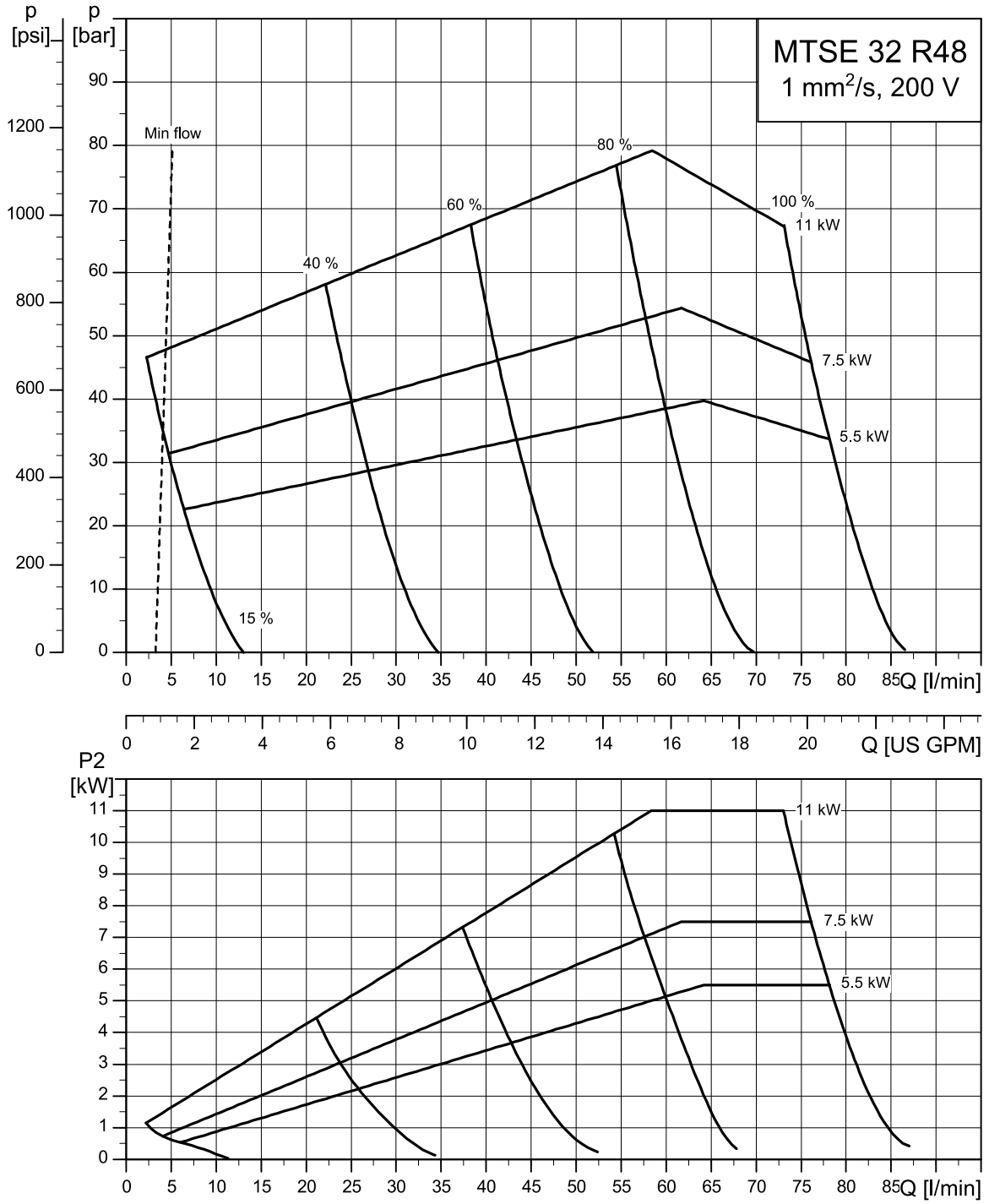

TM091089

Dimensional sketch

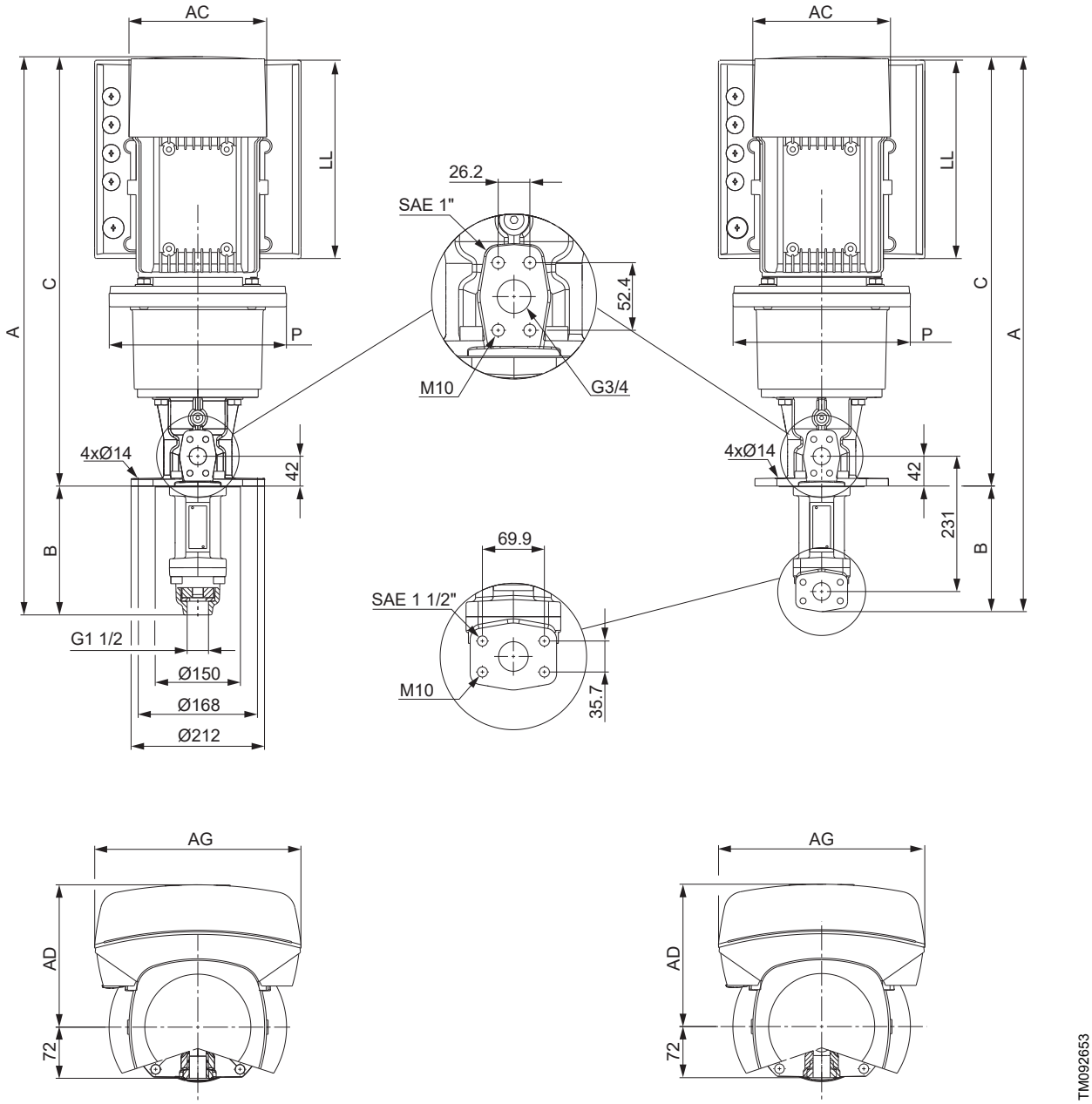

Tank-top installation (left), dry installation (right)

Dimensions and weights
MTSE 32 R48 3×200-240 V

Pump type	P2 [kW]	Dimensions [mm]											Net weight [kg]	
		A		B		C		AC	AD	AG	LL	P		
		Tank-top	Dry	Tank-top	Dry	Tank-top	Dry						Tank-top	Dry
32-39	5.5	942	932	237	227	705	705	255	237	346	317	300	79	74
32-54	7.5	1068	1058	237	227	831	831	314	303	420	414	350	125	120
32-79	11	1068	1058	237	227	831	831	314	303	420	414	350	125	120

MTSE 32 R64, 50/60 Hz

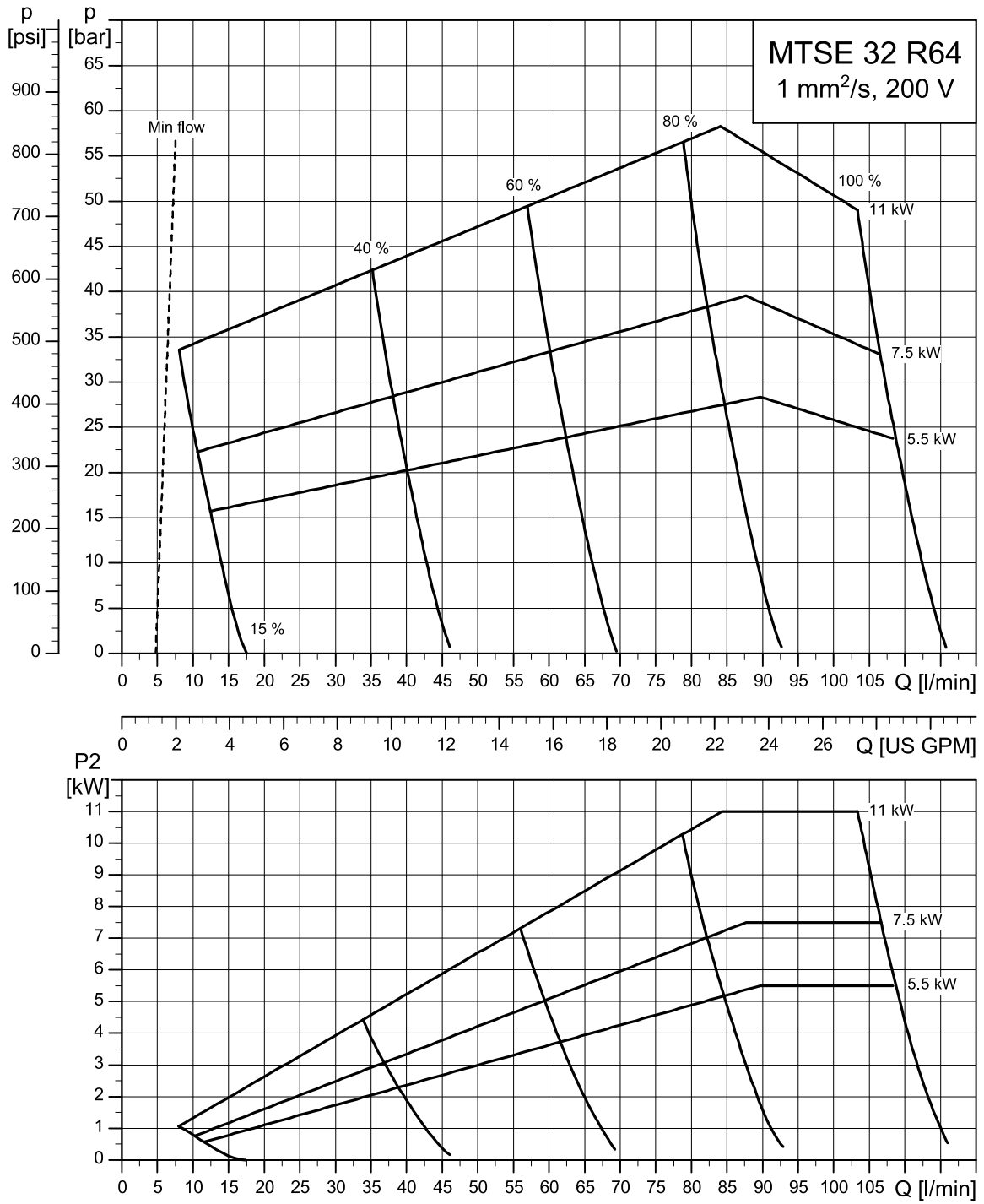

TM091091

Dimensional sketch

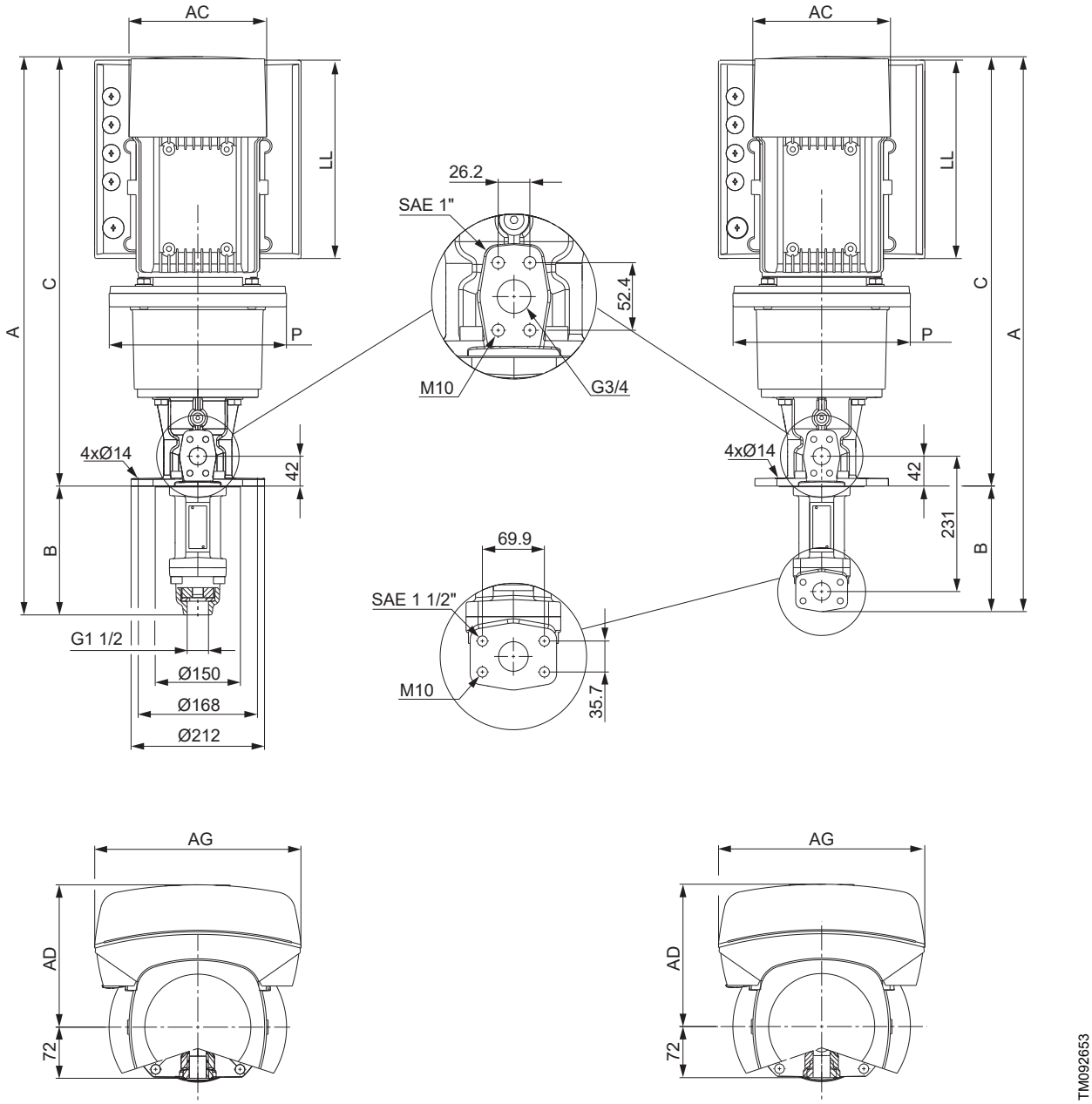

Tank-top installation (left), dry installation (right)

Dimensions and weights
MTSE 32 R64 3×200-240 V

Pump type	P2 [kW]	Dimensions [mm]											Net weight [kg]	
		A		B		C		AC	AD	AG	LL	P		
		Tank-top	Dry	Tank-top	Dry	Tank-top	Dry						Tank-top	Dry
32-28	5.5	942	932	237	227	705	705	255	237	346	317	300	79	74
32-39	7.5	1068	1058	237	227	831	831	314	303	420	414	350	125	120
32-58	11	1068	1058	237	227	831	831	314	303	420	414	350	125	120

MTSE 32 R76, 50/60 Hz

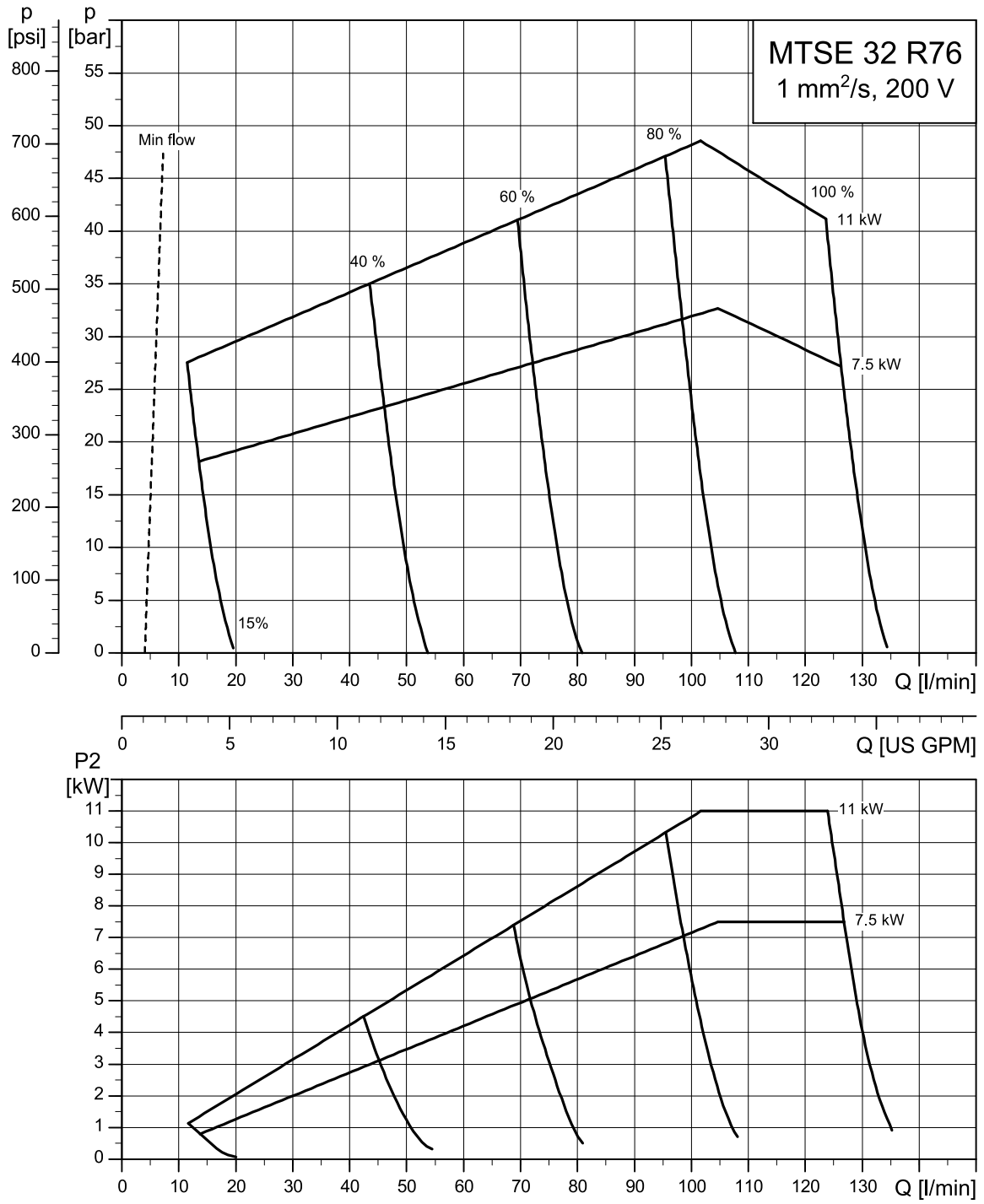

TM091093

Dimensional sketch

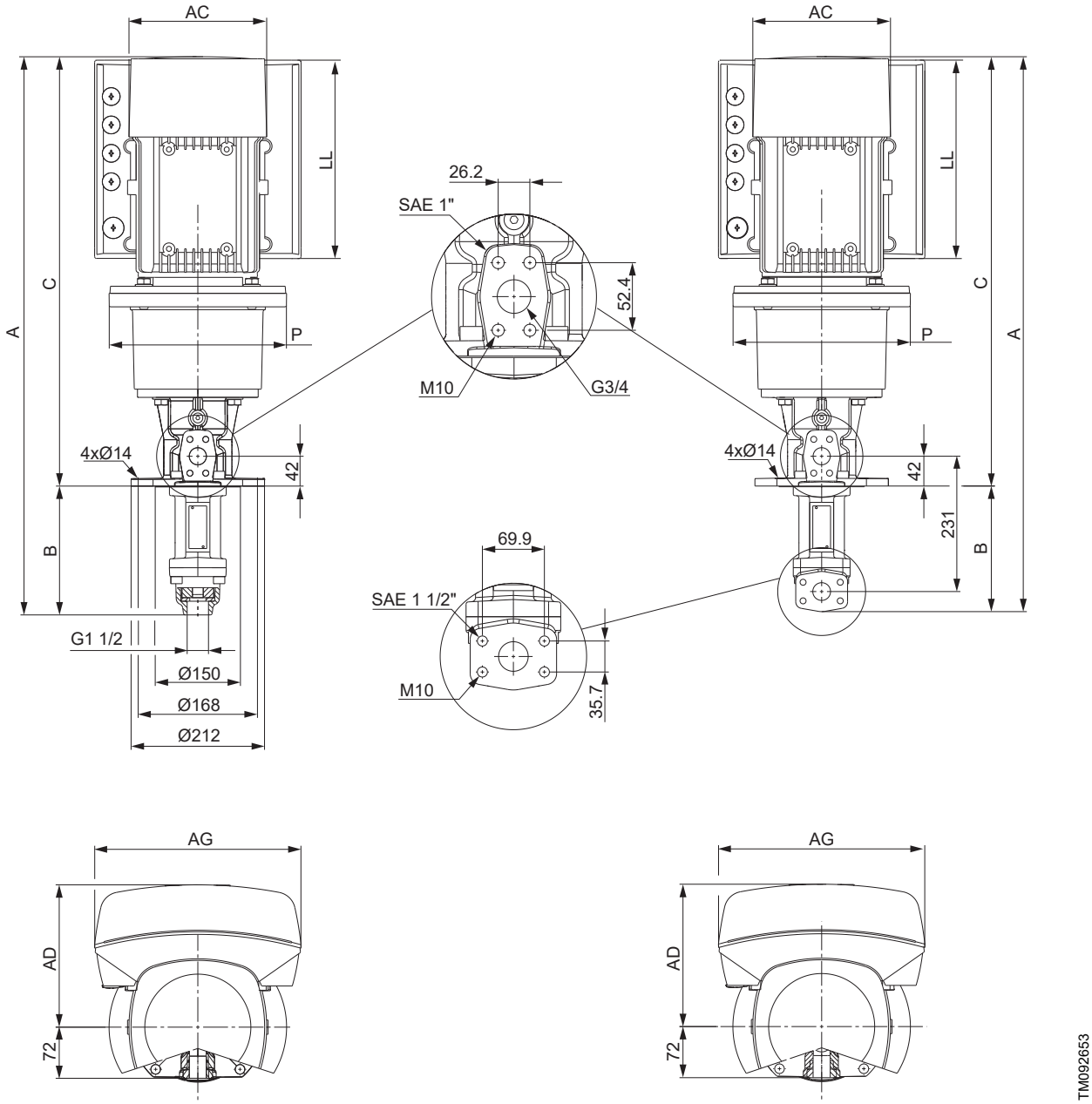

Tank-top installation (left), dry installation (right)

Dimensions and weights
MTSE 32 R76 3×200-240 V

Pump type	P2 [kW]	Dimensions [mm]											Net weight [kg]	
		A		B		C		AC	AD	AG	LL	P		
		Tank-top	Dry	Tank-top	Dry	Tank-top	Dry						Tank-top	Dry
32-32	7.5	1068	1058	237	227	831	831	314	303	420	414	350	125	120
32-48	11	1068	1058	237	227	831	831	314	303	420	414	350	125	120

9. Motor data

Mains-operated motors for MTS, 50 Hz

MG motors

TM031711

Motor make	P2 [kW]	Frame size	Phase	Standard voltage [V]	$I_{1/1}$[A]	$\frac{I_{start}}{I_{1/1}}$[%]	Cos $\varphi_{1/1}$	η [%]	Motor efficiency class
Grundfos MG	2.20	90LE	3	3 × 220-240D / 380-415Y	8.00 / 4.60	790-860	0.86 - 0.80	85.9	IE3
Grundfos MG	3.00	100LC			11.0 / 6.30	840-1100	0.87 - 0.82	87.1	
Grundfos MG	4.00	112MC			13.6 / 7.90	1000-1470	0.87	88.1	
Grundfos MG	5.50	132MC			19.0 / 11.0	1080-1480	0.87 - 0.82	89.2	
Grundfos MG	7.50	132SB			25.0 - 24.2 / 14.4 - 14.0	780-1050	0.88 - 0.82	90.1 - 90.4	
Grundfos MG	11.0	160MB			36.0 - 34.5 / 20.8 - 19.8	660-890	0.88 - 0.84	91.2	
Grundfos MG	15.0	160MD			48.5 - 45.0 / 28.0 - 26.0	660-890	0.89 - 0.87	91.9	
Grundfos MG	18.5	160LB			59.5 - 56.5 / 34.5 - 32.5	830-1100	0.89 - 0.85	92.4	
Grundfos MG	22.0	180MB			68.5 / 39.5	830-1040	0.90	92.7	
Grundfos MG	2.20	90LE		3 × 380-415D	4.60	790-860	0.86 - 0.80	85.9	
Grundfos MG	3.00	100LC			6.30	840-1100	0.87 - 0.82	87.1	
Grundfos MG	4.00	112MC			7.90	1000-1470	0.87	88.1	
Grundfos MG	5.50	132SC			11.0	1080-1480	0.87 - 0.82	89.2	
Grundfos MG	7.50	132SB		3 × 380-415D / 660-690Y	14.4 - 14.0 / 8.30 - 8.10	780-1050	0.88 - 0.86	90.4	
Grundfos MG	11.0	160MB			20.8 - 19.8 / 12.0 - 11.8	660-890	0.88 - 0.84	91.2	
Grundfos MG	15.0	160MD			28.0 - 26.0 / 16.2 - 15.6	660-890	0.89 - 0.87	91.9	
Grundfos MG	18.5	160LB			34.5 - 32.5 / 20.0 - 18.8	830-1100	0.89 - 0.85	92.4	
Grundfos MG	22.0	180MB			39.5 / 22.8	830-1040	0.90	92.7	

Motor make	P2 [kW]	Frame size	Phrase	Standard voltage [V]	$I_{1/1}$[A]	$\frac{I_{start}}{I_{1/1}}$[%]	Cos $\varphi_{1/1}$	η [%]	Motor efficiency class
Grundfos MG	2.20	90LG	3	3 × 220-230D / 380-400Y	7.85 / 4.55	970-1020	0.85 - 0.82	88	IE4
Grundfos MG	3.00	100LE			10.6 / 6.10	1130-1140	0.86 - 0.84	89.1	
Grundfos MG	4.00	112MD			13.6 / 7.80	1130-1190	0.90 - 0.88	90	
Grundfos MG	5.50	132SB			19.4 / 11.2	950-1010	0.84 - 0.81	90.9	
Grundfos MG	7.50	132SE			25.5 / 14.8	1020-1080	0.86 - 0.84	91.7	
Grundfos MG	2.20	90LG		3 × 380-400D / 660-690Y	4.55 / 2.60	970-1020	0.85 - 0.82	88	
Grundfos MG	3.00	100LE			6.10 / 3.55	1130-1140	0.86 - 0.84	89.1	
Grundfos MG	4.00	112MD			7.80 / 4.50	1130-1190	0.90 - 0.88	90	

Motor make	P2 [kW]	Frame size	Phrase	Standard voltage [V]	$I_{1/1}$[A]	$\frac{I_{start}}{I_{1/1}}$[%]	Cos φ 1/1	η [%]	Motor efficiency class
Grundfos MG	5.50	132SB			11.2 / 6.50	950-1010	0.84 - 0.81	90.9	
Grundfos MG	7.50	132SE			14.8 / 8.50	1020-1080	0-86 - 0.84	91.7	
Grundfos MG	11.0	160MD			21.4 / 12.4	950-1000	0.86 - 0.84	92.6	
Grundfos MG	15.0	160LB			29.5 / 16.8	1040-1130	0.86 - 0.83	93.3	
Grundfos MG	18.5	160LC			37.0 / 21.4	1160-1190	0.84 - 0.79	93.7	

Motor make	P2 [kW]	Frame size	Phase	Standard voltage [V]	$I_{1/1}$[A]	$\frac{I_{start}}{I_{1/1}}$[%]	Cos φ 1/1	η [%]	Motor efficiency class
Grundfos MG	2.20	90LE	3	3 × 200-220D / 346-380Y	8.95 - 9.10 / 5.15 - 5.25	880-950	0.84 - 0.76	85.9	IE3
Grundfos MG	3.00	100LC			11.6 - 11.6 / 6.65 - 6.65	1130-1270	0.85 - 0.77	87.1	
Grundfos MG	4.00	112MC			14.6 - 14.0 / 8.50 - 8.10	1040-1220	0.88 - 0.84	88.1	
Grundfos MG	5.50	132SC			21 / 12.2	1080-1180	0.87 - 0.82	89.2	
Grundfos MG	7.50	132SB			29-32 / 16.8 - 18.2	910-930	0.82 - 0.69	90.1	
Grundfos MMG-E	11.0	160MA		3 × 200DD / 400D	40.1 / 19.9	740-740	0.86	93.1	
Grundfos MMG-E	15.0	160MB			53.5 / 26.8	700-700	0.87	92.9	
Grundfos MMG-E	18.5	160L			67.7 / 33.9	710-710	0.87	93.2	
Grundfos MMG-E	22.0	180M			74.6 / 37.5	880-880	0.90	93	

Mains-operated motors for MTS, 60 Hz

MG motors

TM031711

Motor make	P2 [kW]	Frame size	Phase	Standard voltage [V]	$I_{1/1}$[A]	$\frac{I_{start}}{I_{1/1}}$[%]	Cos φ 1/1	η [%]	Motor efficiency class
Grundfos MG	2.2	90LE	3	3 × 230-277D / 400-480Y	7.50 - 6.95 / 4.30 - 4.00	820-1050	0.88 - 0.80	86.5	IE3
Grundfos MG	3	100LC		3 × 230-277D / 400-480Y	10.5 - 9.35 / 6.00 - 5.40	910-1100	0.90 - 0.84	88.5	
Grundfos MG	4	112MC		3 × 230-277D / 380-480Y	13.6 - 11.8 / 7.80 - 6.80	1000-1470	0.91 - 0.82	88.5	
Grundfos MG	5.5	132SC		3 × 230-277D / 380-480Y	18.4 - 16.2 / 10.6 - 9.30	1020-1480	0.90 - 0.80	89.5	
Grundfos MG	7.5	132SB		3 × 230-277D / 380-480Y	24.6 - 20.8 / 14.2 - 12.0	680-1050	0.90 - 0.82	90.2	
Grundfos MG	11	160MB		3 × 230-277D / 400-480Y	34.8 - 30.0 / 20.1 - 17.2	580-890	0.88 - 0.83	91.0	
Grundfos MG	15	160MD		3 × 230-277D / 400-480Y	46.6 - 39.0 / 26.9 - 22.4	640-890	0.89 - 0.86	91.0	
Grundfos MG	18.5	160LB		3 × 230-277D / 380-480Y	59.5 - 48.5 / 34.5 - 28.0	670-1100	0.89 - 0.84	92.4	
Grundfos MG	22	180MB		3 × 230-277D / 380-480Y	69.5 - 56.5 / 40.0-32.5	650-1040	0.91	91.7	

Motor make	P2 [kW]	Frame size	Phase	Standard voltage [V]	$I_{1/1}$[A]	$\frac{I_{start}}{I_{1/1}}$[%]	Cos φ 1/1	η [%]	Motor efficiency class
Grundfos MG	2.20	90LE	3	3 × 200-220D / 346-380Y	8.60 - 8.00/5.00 - 4.60	770-910	0.89 - 0.85	86.5	IE3
Grundfos MG	3.00	100LC			11.4 - 10.4 / 6.55 - 6	990-1230	0.88 - 0.86	88.5	
Grundfos MG	4.00	112MC			14.6 - 13.0 / 8.45 - 7.45	890-1190	0.90 - 0.87	88.5	
Grundfos MG	5.50	132SC			20.2 - 18.8 / 11.7 - 10.8	1020-1480	0.90 - 0.85	89.5	
Grundfos MG	7.50	132SB			26.5 - 25 / 15.4 - 14.4	830-1050	0.89 - 0.82	90.2	
Grundfos MMG-E	11.0	160MA		3 × 200-220DD / 400-440D	39.2 - 35.9 / 19.5 - 17.8	650-790	0.88 - 0.87	92.5 - 93.2	
Grundfos MMG-E	15.0	160MB			53.1 - 48.3 / 26.6 - 24.2	620-780	0.89 - 0.88	92.5 - 92.4	
Grundfos MMG-E	18.5	160L			65.3 - 60.2 / 32.8 - 30.2	620-860	0.89 - 0.81	93 - 94.5	
Grundfos MMG-E	22.0	180M			75.2 - 68.7/38.0 - 34.5	790-980	0.91 - 0.89	92.3 - 94.2	

Mains-operated motors for MTSE, 50/60 Hz

MGE motors

TM085711

MGE 380-500 V

Motor make	P2 [kW]	Frame size	Phase	Standard voltage [V]	$I_{1/1}$ [A]	Cos φ 1/1	η [%]	Motor efficiency class
Grundfos MGE	2.2	90	3	380-500	4.15 - 3.4	0.93 - 0.87	90.1	IE5
	3.0	100		380-500	5.8 - 4.8	0.91 - 0.86	90.7	
	4.0	112		380-500	7.6 - 6.2	0.92 - 0.87	92.2	
	5.5	132		380-500	10.3 - 8.2	0.92 - 0.88	92.7	
	7.5	132		380-500	14.1 - 11.2	0.93 - 0.89	92.5	
	11.0	160		380-500	20.3 - 16.0	0.93 - 0.90	93.1	
	15.0	160		380-500	26.7 - 22.0	0.94 - 0.92	92.8	
	18.5	160		380-500	33.0 - 27.8	0.94 - 0.92	92.8	
	22.0	160		380-500	39.2 - 31.5	0.94 - 0.93	92.9	

MGE 200-240 V

Motor make	P2 [kW]	Frame size	Phase	Standard voltage [V]	$I_{1/1}$ [A]	Cos φ 1/1	η [%]	Motor efficiency class
Grundfos MGE	2.2	100	3	200-240	7.8 - 6.5	0.94	88.8	IE5
	3	100		200-240	10.5 - 8.8	0.94	90.3	
	4	112		200-240	14.1 - 11.8	0.94	90.8	
	5.5	132		200-240	19.6 - 16.3	0.94	90.2	
	7.5	160		200-240	25.6 - 21.4	0.95 - 0.94	90.8	
	11	160		200-240	37.4 - 31.4	0.95 - 0.94	92	

10. Accessories

CIM (Communication Interface Modules)

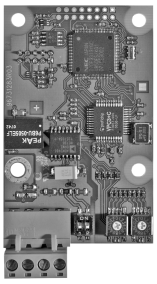

Grundfos CIM (Communication Interface Module)

The CIM enables communication of operating data, such as measured values and setpoints, between the pumps and a building management system. The CIM devices are add-on communication modules that are fitted in the terminal box of the pumps.

Note that the CIM must be fitted by authorized persons.

We offer the following CIM devices:

CIM 100

For communication via LONWorks

CIM 150

For communication via PROFIBUS DP

CIM 200

For communication via Modbus RTU

CIM 300

For communication via BACnet MS/TP

CIM 500

Ethernet module for communication via PROFINET, Modbus TCP, BACnet IP, EtherNet/IP GRM IP, Grundfos iSOLUTIONS Cloud.

Available CIM devices

Description	Fieldbus protocol	Product number
CIM 100	LONWorks	96824797
CIM 150	PROFIBUS DP	96824793
CIM 200	Modbus RTU	96824796
CIM 300	BACnet MS/TP	96893770
CIM 500	Ethernet	98301408
Antenna (puc)	3G/4G	99518079

For further information about data communication via CIM and fieldbus protocols, see the CIM documentation available at the Grundfos Product Center at www.grundfos.com.

Related information

Central management system

Remote controls

Grundfos GO

Use the Grundfos GO for the following types of wireless communication with the pump:

- infrared
- radio
- Bluetooth.

Infrared and radio communication

The following motors connect to the pump through wireless infrared or radio communication:

- MGE 2.2 kW.

Related information

Grundfos GO Link

MI 301

The MI 301 is a module with built-in infrared and radio communication. It is required for the Grundfos GO communication. The MI 301 can be used together with Android or iOS-based smart devices with a Bluetooth connection. It has a rechargeable Li-ion battery that must be charged separately.

TM053890

MI 301

The following are supplied with the product:

- Grundfos MI 301
- sleeve
- battery charger
- quick guide.

Description	Part no.
Grundfos MI 301	98046408

Product numbers

Grundfos GO variant	Product number
Grundfos MI 301	98046408

Bluetooth communication

The following motors connect to the pump through Bluetooth communication:

- MGE 3 to 22 kW.

Related information

Bluetooth

Counterflanges for outlet port

A set consists of one counterflange, one gasket, bolts and nuts.

SAE flange	Pump type	Description	Rated pressure	Pipe connection	Product number
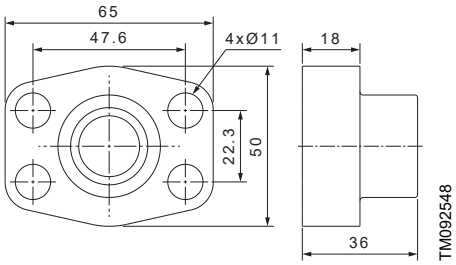	MTS 25	Threaded	207 bar	G3/4	93220197
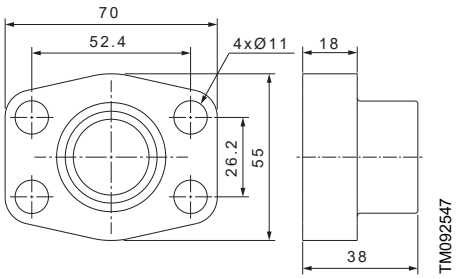	MTS 32	Threaded	207 bar	G1	93220201

Counterflanges for inlet port

A set consists of one counterflange, one gasket, bolts and nuts.

SAE flange	Pump type	Description	Rated pressure	Pipe connection	Product number
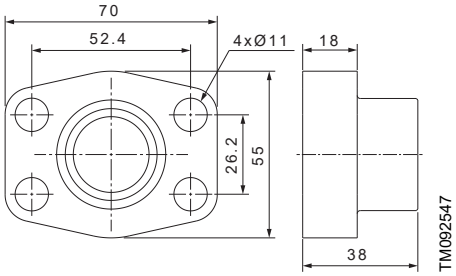	MTS 25	Threaded	207 bar	G1	93220201
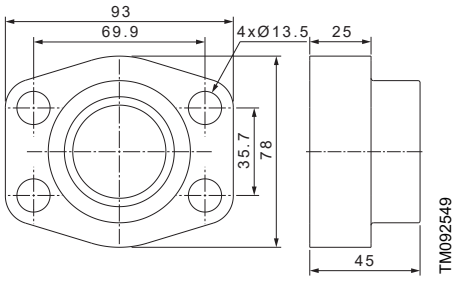	MTS 32	Threaded	207 bar	G1 1/2	93220203

Pressure-relief valves

Screw spindle pumps are positive-displacement pumps that must be pressure-controlled in order to protect the motor and pipe system. The pumped liquid which is not needed is returned to the tank via the pressure-relief valve. Selection of valves depends on the following factors:

- required pressure, flow rate and viscosity of the pumped liquid
- required valve adjustability and control.

The pressure-relief valves below are specifically designed for use in coolant applications.

Type	Description	Product number		
H	Manually operated, continuously adjustable pressure-relief valve. • The valve working pressure can be adjusted by a hand wheel.	98784405		TM054391
P	Manually operated, continuously adjustable pressure-relief valve with air pilot valve and solenoid valve for pressureless circulation. • The valve working pressure can be adjusted by a hand wheel. • Circulation with minimised pressure can be electrically activated. The valve is open at zero current and pressure.	98784432		TM054390
E	Electrically controlled, continuously adjustable pressure-relief valve with proportional solenoid air pilot valve. • The adjustable valve type enables the setting of any pressure from 5 to 120 bar. For pressure regulation, the machine control sends an analogue signal (0-10 V). The pneumatic control pressure is changed in proportion to the analogue signal and regulates the working pressure. • The valve is open in case of power loss or loss of pressure.	98784436		TM054392
-	Manually operated, safety valve • The valve working pressure can be adjusted by a hexagon key.	See the full list below.		TM087630

Further information on the manually operated safety relief vale

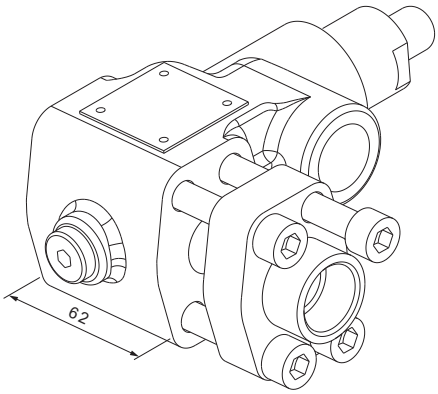

TM092545

Safety relief valve for MTS 25

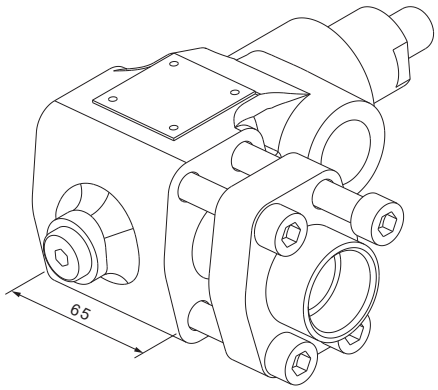

TM092546

Safety relief valve for MTS 32

Pos.	Description
1	Pressure relief line connection: MTS 25, 32: G 3/4
2	SAE counterflanges: MTS 25: SAE 3/4" MTS 32: SAE 1"
3	Connection for pressure gauge or pressure sensor G 1/4

Pump size	Description	SAE connection	Pressure range	Product number
MTS 25	Manually operated safety relief valve	SAE 3/4	20 - 60 bar	93220124
MTS 25	Manually operated safety relief valve	SAE 3/4	50 - 110 bar	93289399
MTS 32	Manually operated safety relief valve	SAE 1	20 - 60 bar	93289411
MTS 32	Manually operated safety relief valve	SAE 1	50 - 110 bar	93289412

Related information

Overload protection

11. Grundfos Product Center

Online search and sizing tool to help you make the right choice.
From the international view, you can select your specific country to view the product range available to you.
International view: *http://product-selection.grundfos.com*

All the information you need in one place

Performance curves, technical specifications, pictures, dimensional drawings, motor curves, wiring diagrams, spare parts, service kits, 3D drawings, documents, system parts. The Product Center displays any recent and saved items - including complete projects - right on the main page.

Downloads

On the product pages, you can download installation and operating instructions, data booklets, service instructions, etc., in PDF format.

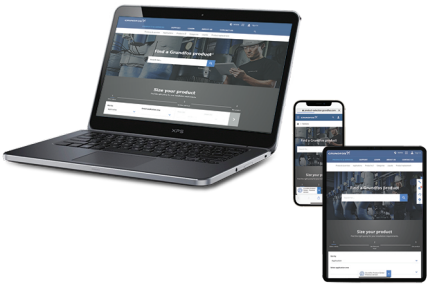

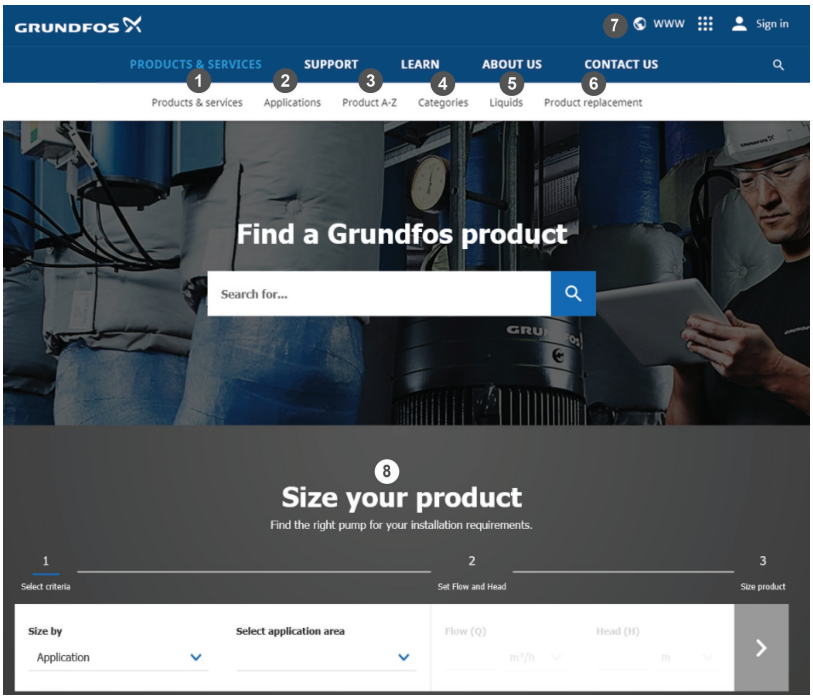

When you select your country, you will see the menus below. Note that some menus may not be available depending on the country.
Example: *https://product-selection.grundfos.com/uk*

Pos.	Description
1	**Products & services** enables you to find products and documents by typing a product number or name into the search field.
2	**Applications** enables you to choose an application to see how Grundfos can help you design and optimize your system.
3	**Products A-Z** enables you to look through a list of all the Grundfos products.
4	**Categories** enables you to look for a product category.
5	**Liquids** enables you to find pumps designed for aggressive, flammable or other special liquids.
6	**Product replacement** enables you to find a suitable replacement.
7	**WWW** enables you to select the country, which changes the language, the available product range and the structure of the website.
8	**Sizing** enables you to size a product based on your application and operating conditions.

12. Document quality feedback

To provide feedback about this document, scan the QR-code using your phone's camera or a QR code app.

Click here to submit your feedback

© Grundfos Holding A/S 04.2026

93188043

ECM: 1450489	04.2026

Grundfos Holding A/S
Poul Due Jensens Vej 7
DK-8850 Bjerringbro
Tel: +45 87 50 14 00
www.grundfos.com

GRUNDFOS