Hydro MPC

Supplement data booklet for GIT range, systems with 2 to 6 pumps and GENIECON PANEL

GRUNDFOS

Table of contents

1. System introduction 3
System description 3

2. System data 4
Performance range 4
Product range. 6
Type key 7

3. Construction. 8

4. Performance curves and technical data. . . . 9
Hydro MPC-E with CRE 3 9
Hydro MPC-E with CRE 5 12
Hydro MPC-E with CRE 10 15
Hydro MPC-E with CRE 15 18
Hydro MPC-E with CRE 20 21
Hydro MPC-E with CRE 32 24
Hydro MPC-E with CRE 45 27
Hydro MPC-E with CRE 64 31
Hydro MPC-EC with CR 64 34

5. Document quality feedback. 36

1. System introduction

This data booklet includes information such as system description, performance curves, type key, curves, technical data, and related details. For information not specifically mentioned in this document, see the data booklet in the table below.

Title	Document type	QR code	Link	Publication number
Hydro MPC	Data booklet		*http://net.grundfos.com/qr/i/93242159*	93242159

System description

As standard, the system consists of two to six CR or CRE pumps.

The pumps are connected in parallel and mounted on a common base frame with a control panel and all the necessary fittings, such as manifolds, non-return valves, isolating valves, pressure transmitters, pressure gauge, etc.

A pilot pump can be added in the system with high variation in flow demand to maintain high efficiency at low flow. The pumps of the system can be removed without interfering with the pipes on either side of the manifolds. Different control variants are available for the system.

The system is preconfigured and tested from factory.

Hydro MPC-E

- The system consists of two to six identical electronically speed-controlled CRE pumps.
- Each pump has an integrated frequency converter.
- The motor power is from 0.37 to 22 kW.
- The pipe connection is from R 2 to DN 200.

Hydro MPC-EC

- The system consists of two to six identical CR pumps.
- Each pump is connected to a Grundfos CUE frequency converter in the control panel.
- The motor power starts from 30 kW.
- The pipe connection is from DN 150 to DN 200.

2. System data

Performance range

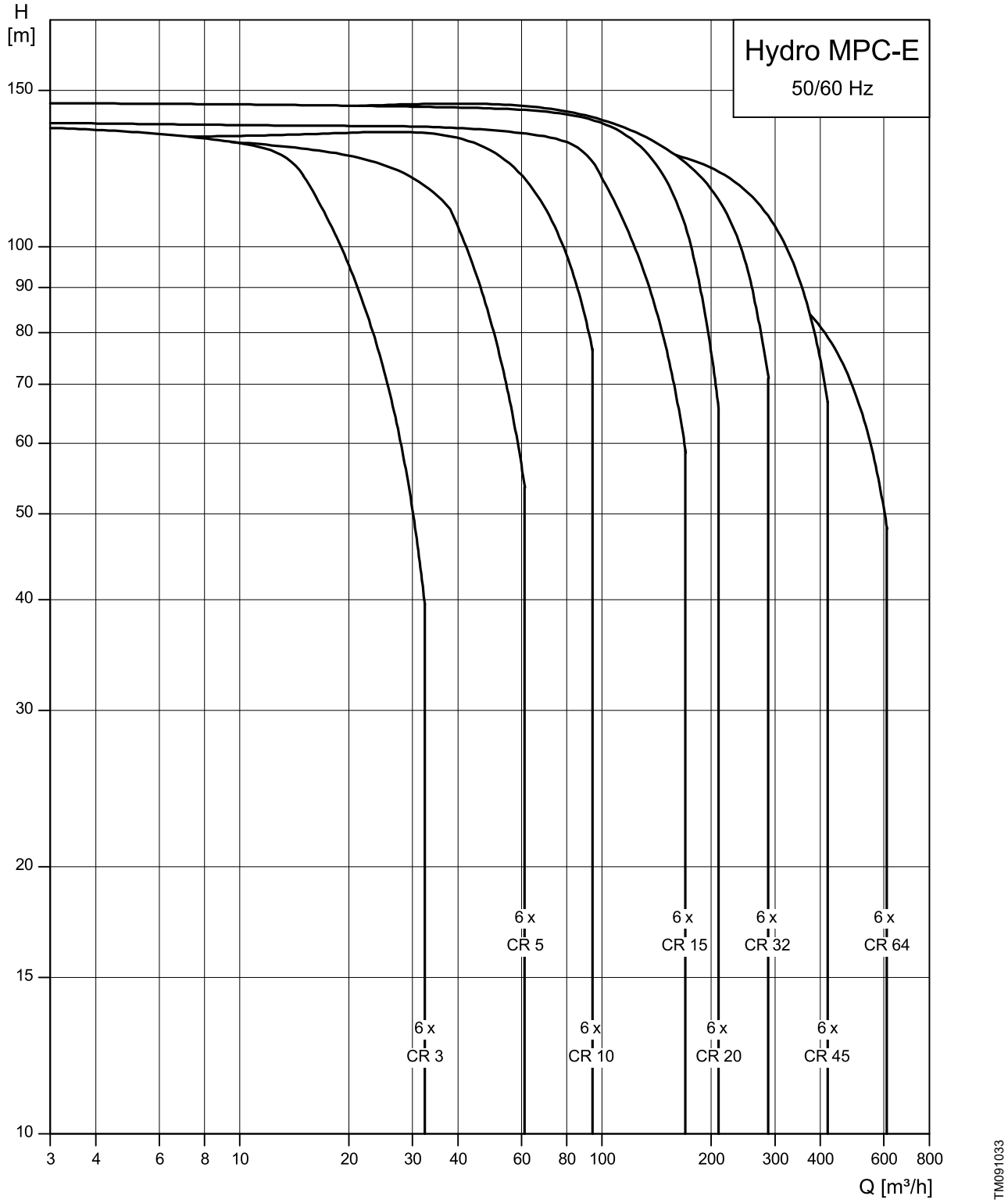

Hydro MPC-E

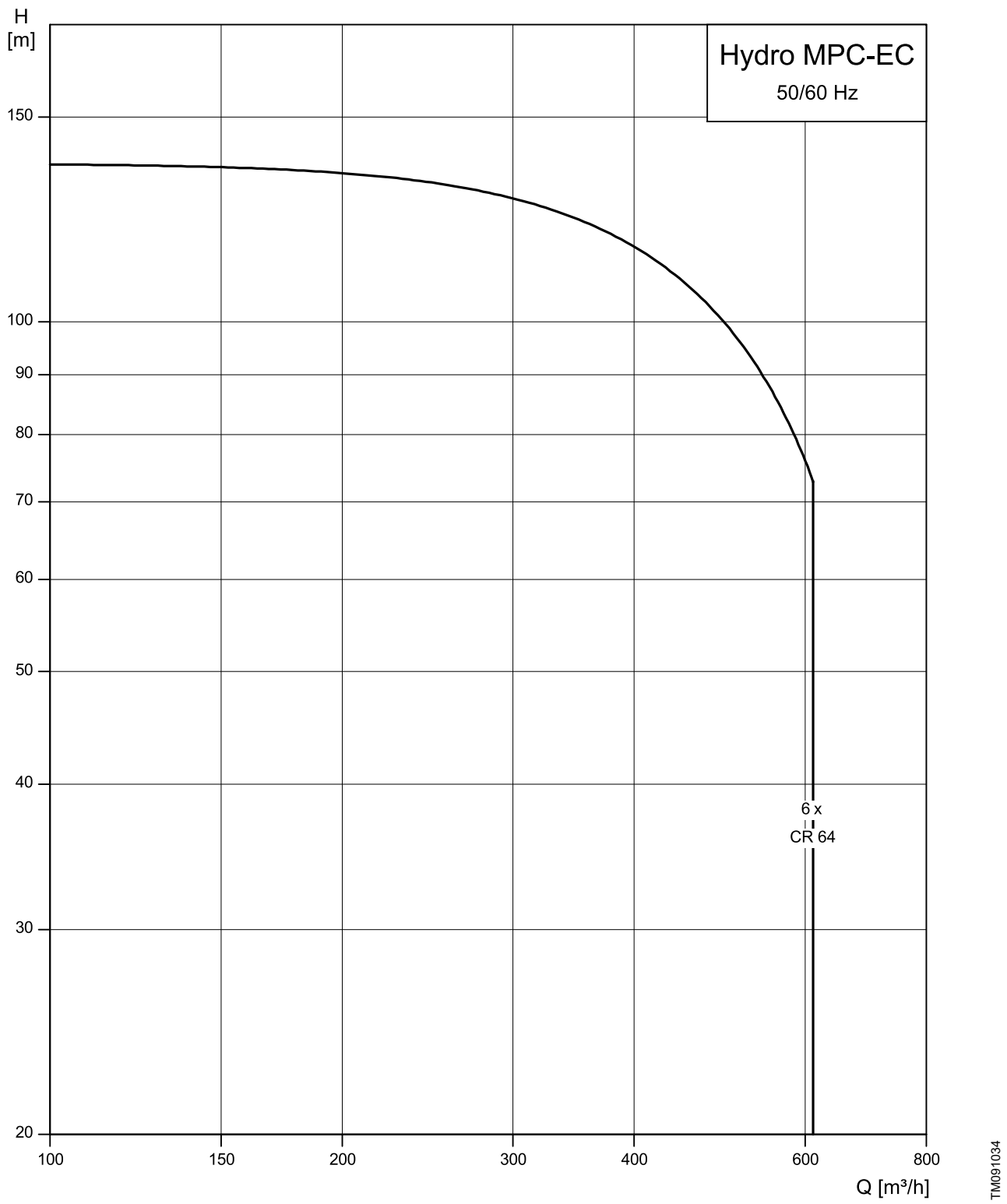
H
[m]
Hydro MPC-EC
50/60 Hz
150
100
90
80
70
60
50
40
30
20
6 x
CR 64
100
150
200
300
400
600
800
Q [m³/h]
TM091034

Hydro MPC-EC

Product range

System type	Hydro MPC-E	Hydro MPC-EC
Frequency	50 Hz	50 Hz
Number of pumps	2-6	2-6
Hydraulic data		
Maximum head [m]	146	146
Rated flow rate [m^3/h]	0-1836	0-1836
Liquid temperature [°C]	5-60 [1)]	5-60 [1)]
Ambient temperature [°C]	0-40	0-40
Relative humidity	90 %	90 %
Max. operating pressure [bar]	16 [2)]	16 [2)]
Motor data		
Motor power [kW]	0.37 - 22	30-37 [3)]
Shaft seal	HQQE (SiC/SiC/EPDM)	HQQE (SiC/SiC/EPDM)
Pipe connection		
Union connection	R 2 - R 2 1/2	-
DIN flange	DN 80 - DN 200	DN 150 - DN 200

1) Systems for lower and higher temperature are available on request.

2) Systems with maximum operating pressure higher than 16 bar are available on request.

3) Systems with bigger size are available on request.

Legend

- - Not applicable

Type key

Example: Hydro MPC-E 6 CRE155-1-1 V1 GD-A-D-ABC

Code	Explanation		Designation
Hydro MPC			System name
E	E: All pumps with E motors [4)] X: Customized system type	EC: All main pumps are fixed speed pumps with CUEs [5)]	System type
6			Number of main pumps
CRE155-1-1			Pump type
V1	V1: 3 × 400 V, 50 Hz, N, PE V2: 3 × 400 V, 50 Hz, PE V3: 3 × 380 V, 50 Hz, N, PE V4: 3 × 380 V, 50 Hz, PE V5: 3 × 400 V, 60 Hz, N, PE V6: 3 × 400 V, 60 Hz, PE V7: 3 × 380 V, 60 Hz, N, PE V8: 3 × 380 V, 60 Hz, PE V9: 3 × 440 V, 60 Hz, N, PE VA: 3 × 440 V, 60 Hz, PE VB: 3 × 220 V, 60 Hz, N, PE VC: 3 × 220 V, 60 Hz, PE VD: 1 × 208 V, 60 Hz, PE	VE: 3 × 208 V, 60 Hz, PE VF: 3 × 230 V, 60 Hz, PE VG: 3 × 460 V, 60 Hz, N, PE VH: 3 × 460 V, 60 Hz, PE VJ: 3 × 575 V, 60 Hz, PE VK: 3 × 415 V, 50 Hz, N, PE VL: 3 × 415 V, 50 Hz, PE VM: 1 × 240 V, 50 Hz, N, PE VN: 1 × 230 V, 50 Hz, N, PE VQ: 1 × 230 V, 60 Hz, PE VR: 3 × 200 V, 50 Hz, PE VS: 3 × 200 V, 60 Hz, PE VX: Customized variant (special voltage rating)	Voltage code
GD	GA: Systems with GENIECON PANEL mounted on the same base frame as the pumps. GC: Systems with GENIECON PANEL mounted on its own base for floor mounting. The panel can be placed up to 3 meters from the pumps. GD: Systems with GENIECON PANEL mounted on its own base frame. The panel can be placed up to 3 meters from the pumps. GW: Systems with GENIECON PANEL prepared for wall mounting. The panel can be placed from 3 meters and up. GX: Systems with GENIECON PANEL, customized mounting.		Design
A	A: E B: DOL C: SD		Starting method
D	A: Stainless steel manifold and base frame(s), with standard valves B: Stainless steel manifold, base frame(s) and valves C: Galvanized steel manifold and base frame(s), with standard valves D: Stainless steel manifold, galvanized steel base frame(s), with standard valves G: Galvanized steel manifold, galvanized steel base frame and local valves H: Galvanized steel manifold, black painted base frame(s), with standard valves I: Stainless steel manifold, black painted base frame(s), with standard valves J: Black coated mild steel manifold and base frame(s), with standard valves P: Stainless steel manifold, galvanized steel base frame and local valves X: Customized material combination		Material combination
ABC	A: Standard hydraulic B: Pilot pump C: Bypass D: Non-return valve on inlet E: Elbow manifold F: No inlet manifold G: Diaphragm tank H: Redundant inlet-pressure sensor I: Repair switch J: Redundant outlet-pressure sensor K: 1 free pump position L: 2 free pump position M: 3 free pump position	N: PN 10 pressure rating O: PN 25 pressure rating P: Low prepressure (NPSH) Q: PN 40 pressure rating R: Non standard RPM S: Customized variant T: Certificate U: Undersized motor V: Standard controls with options W: Customized controls X: More than three options Y: Control panel with double door	Option

4) Integrated frequency converter, one per pump.

5) Grundfos CUE frequency converter, one per pump.

3. Construction

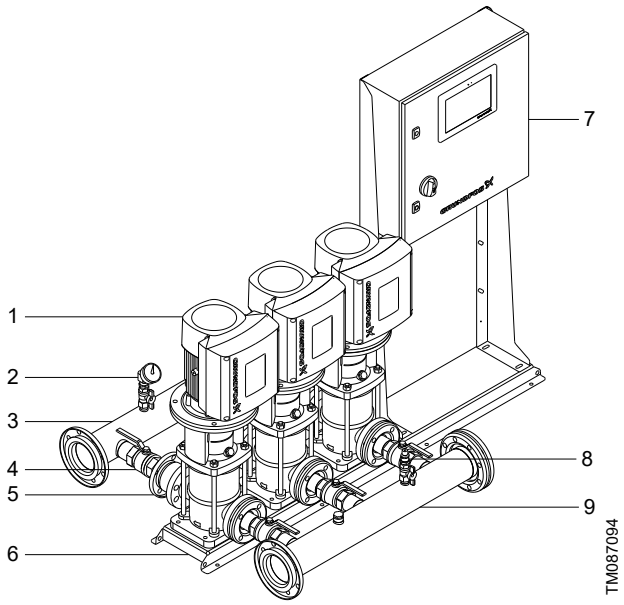

System structure

Pos.	Description	Quantity
1	Pump	2-6
2	Outlet-pressure sensor and pressure gauge	1
3	Outlet manifold	1
4	Isolating valve	2 per pump
5	Non-return valve	1 per pump
6	Base frame	1-2
7	Control panel	1
8	Inlet-pressure sensor	1
9	Inlet manifold	1

System components

The system has a base frame fitted with these components.

Components fitted on the inlet side:

- an inlet manifold
- an inlet-pressure sensor
- one isolating valve per pump.

Components fitted on the outlet side:

- an outlet manifold
- one non-return valve per pump
- one isolating valve per pump
- an outlet-pressure sensor and pressure gauge.

The system is fitted with a control panel to control and monitor the system. Optionally, the system can be fitted with a diaphragm tank on the outlet side.

4. Performance curves and technical data

Hydro MPC-E with CRE 3

Curve charts

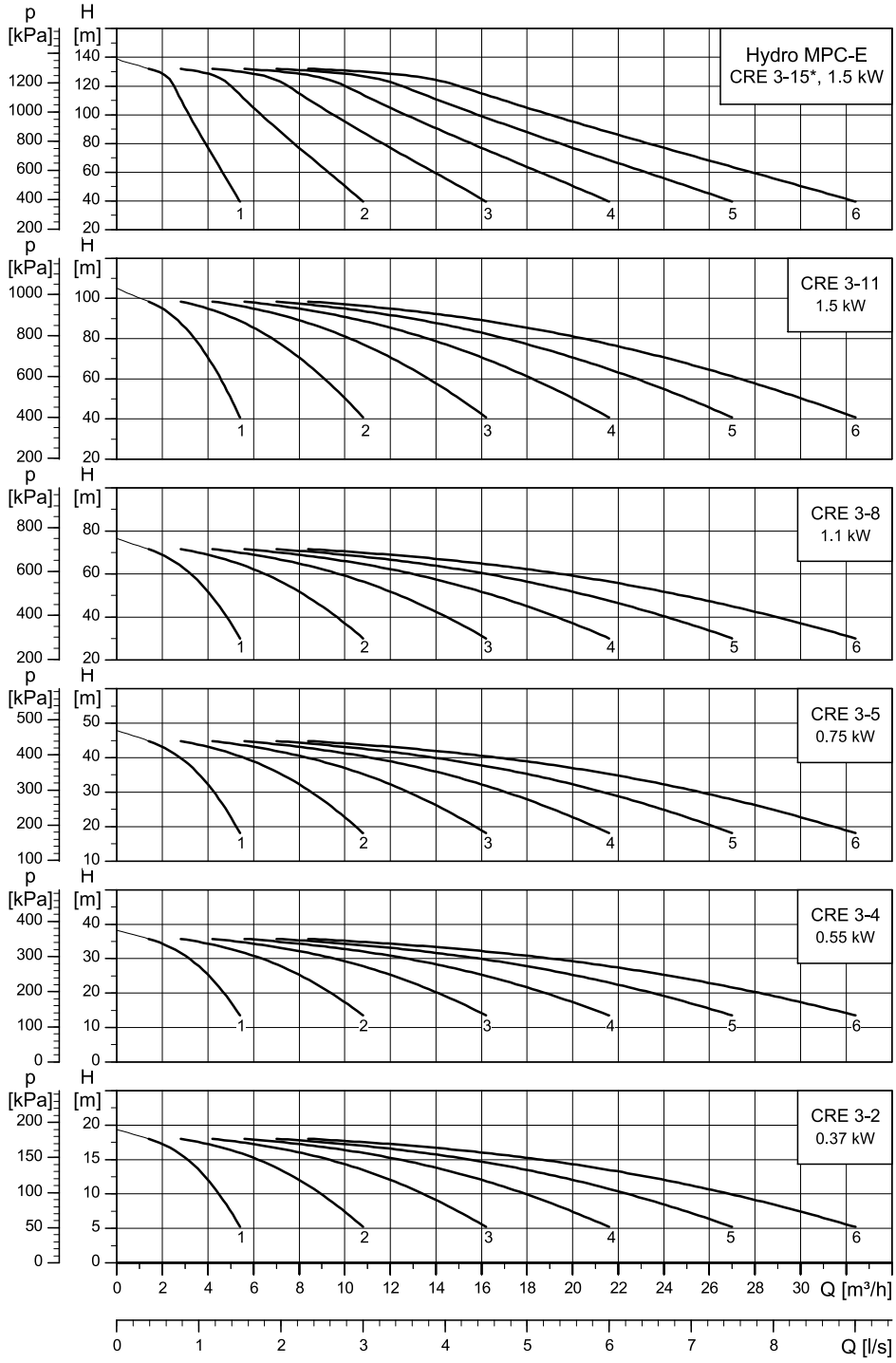

* For undersized motors, the maximum speed depends on the power usage.
Losses in fittings and valves are not included.

Dimensional sketch

Below is the dimensional sketch of a system in different designs. The system is shown as an example. The pumps supplied may differ from the sketch.

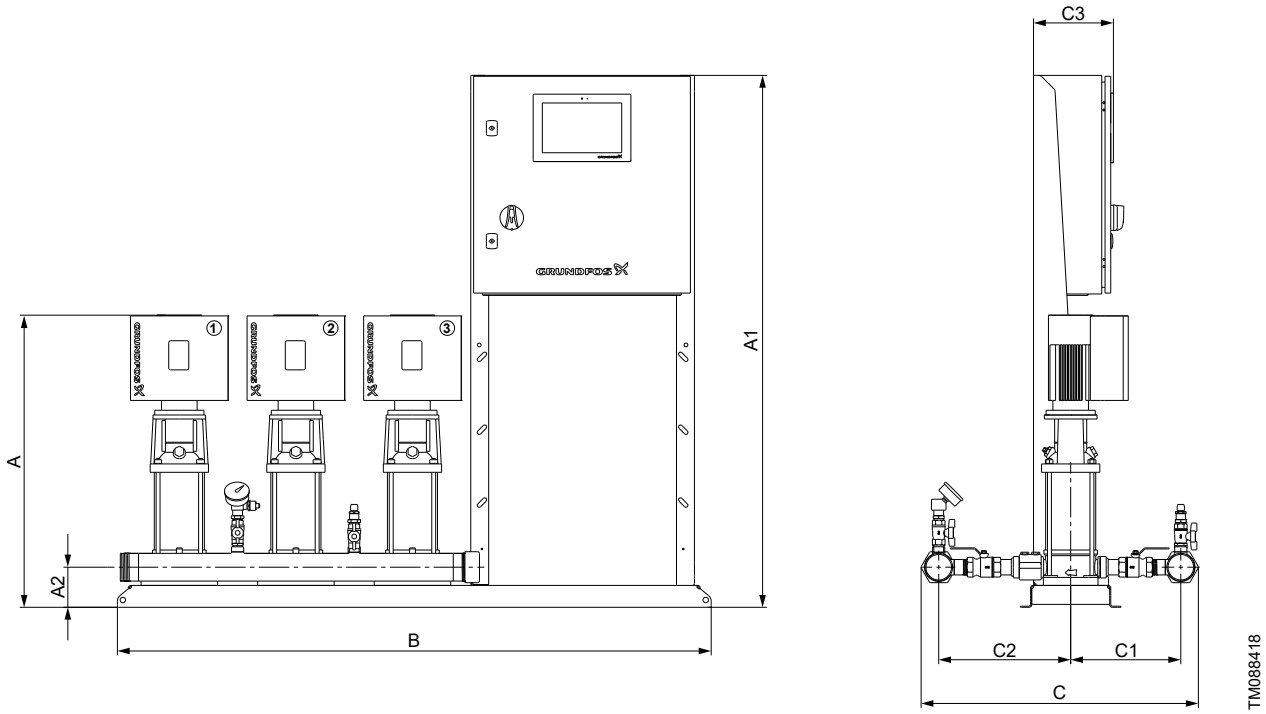

Design GA

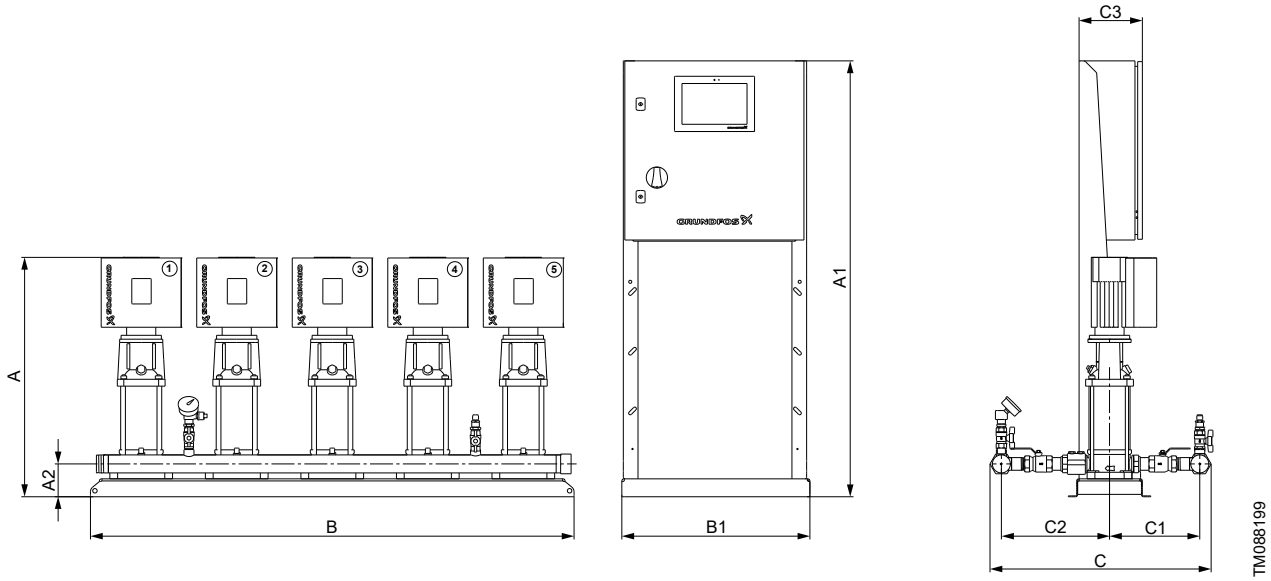

Design GD

Electrical data, dimensions and weights

Number of pumps	Pump type	Motor power [kW]	Motor type	Voltage code	Rated current [A]	Connections	A [mm]	A1 [mm]	A2 [mm]	B [mm]	B1 [mm]	C [mm]	C1 [mm]	C2 [mm]	C3 [mm]	Net weight [kg]	Design
2	CRE 3-2	0.37	❍	V1	2.18	R 2	533	1460	112	1050	-	726	295	355	210	89	GA
	CRE 3-4	0.55	❍	V1	3.04	R 2	551	1460	112	1050	-	726	295	355	210	90	GA
	CRE 3-5	0.75	❍	V1	4.1	R 2	575	1460	112	1050	-	726	295	355	210	94	GA
	CRE 3-8	1.1	❍	V1	5.88	R 2	629	1460	112	1050	-	726	295	355	210	98	GA
	CRE 3-11	1.5	●	V2	2.82	R 2	759	1460	112	1050	-	726	295	355	210	108	GA
	CRE 3-15 [6)]	1.5	●	V2	2.82	R 2	831	1460	112	1050	-	726	295	355	210	112	GA
3	CRE 3-2	0.37	❍	V1	2.18	R 2	533	1460	112	1370	-	726	295	355	210	117	GA
	CRE 3-4	0.55	❍	V1	3.04	R 2	551	1460	112	1370	-	726	295	355	210	119	GA
	CRE 3-5	0.75	❍	V1	4.1	R 2	575	1460	112	1370	-	726	295	355	210	124	GA
	CRE 3-8	1.1	❍	V1	5.88	R 2	629	1460	112	1370	-	726	295	355	210	130	GA
	CRE 3-11	1.5	●	V2	2.82	R 2	759	1460	112	1370	-	726	295	355	210	147	GA
	CRE 3-15 [6)]	1.5	●	V2	2.82	R 2	831	1460	112	1370	-	726	295	355	210	152	GA
4	CRE 3-2	0.37	❍	V1	2.18	R 2 1/2	533	1460	112	1690	-	741	295	355	210	159	GA
	CRE 3-4	0.55	❍	V1	3.04	R 2 1/2	551	1460	112	1690	-	741	295	355	210	161	GA
	CRE 3-5	0.75	❍	V1	4.1	R 2 1/2	575	1460	112	1690	-	741	295	355	210	169	GA
	CRE 3-8	1.1	❍	V1	5.88	R 2 1/2	629	1460	112	1690	-	741	295	355	210	177	GA
	CRE 3-11	1.5	●	V2	2.82	R 2 1/2	759	1460	112	1690	-	741	295	355	210	188	GA
	CRE 3-15 [6)]	1.5	●	V2	2.82	R 2 1/2	831	1460	112	1690	-	741	295	355	210	195	GA
5	CRE 3-2	0.37	❍	V1	2.18	R 2 1/2	533	1460	112	1565	430	741	295	355	210	197	GD
	CRE 3-4	0.55	❍	V1	3.04	R 2 1/2	551	1460	112	1565	430	741	295	355	210	200	GD
	CRE 3-5	0.75	❍	V1	4.1	R 2 1/2	575	1460	112	1565	430	741	295	355	210	209	GD
	CRE 3-8	1.1	❍	V1	5.88	R 2 1/2	629	1460	112	1565	600	741	295	355	210	220	GD
	CRE 3-11	1.5	●	V2	2.82	R 2 1/2	759	1460	112	1565	600	741	295	355	210	247	GD
	CRE 3-15 [6)]	1.5	●	V2	2.82	R 2 1/2	831	1460	112	1565	600	741	295	355	210	256	GD
6	CRE 3-2	0.37	❍	V1	2.18	R 2 1/2	533	1460	112	1885	430	741	295	355	210	227	GD
	CRE 3-4	0.55	❍	V1	3.04	R 2 1/2	551	1460	112	1885	430	741	295	355	210	231	GD
	CRE 3-5	0.75	❍	V1	4.1	R 2 1/2	575	1460	112	1885	430	741	295	355	210	241	GD
	CRE 3-8	1.1	❍	V1	5.88	R 2 1/2	629	1460	112	1885	600	741	295	355	210	254	GD
	CRE 3-11	1.5	●	V2	2.82	R 2 1/2	759	1460	112	1885	600	741	295	355	210	287	GD
	CRE 3-15 [6)]	1.5	●	V2	2.82	R 2 1/2	831	1460	112	1885	600	741	295	355	210	298	GD

6) Pump with undersized motor

Legend

- ● Three-phase motors
- ❍ Single-phase motors
- - Not applicable

Explanation

- Motor power is the power per pump.
- Rated current: Additional current applies for the control circuit depending on design.
- Voltage code, V1: 3 × 400 V ± 5 %, 50 Hz, N, PE.
- Voltage code, V2: 3 × 400 V ± 5 %, 50 Hz, PE.
- Design GA: The pumps and the control panel are mounted on the same base frame.
- Design GD: The pumps and the control panel are mounted on their own base frames. The base frames are separated. The control panel can be placed up to 3 meters from the pumps.
- Dimensions may vary by ± 10 mm.

Hydro MPC-E with CRE 5

Curve charts

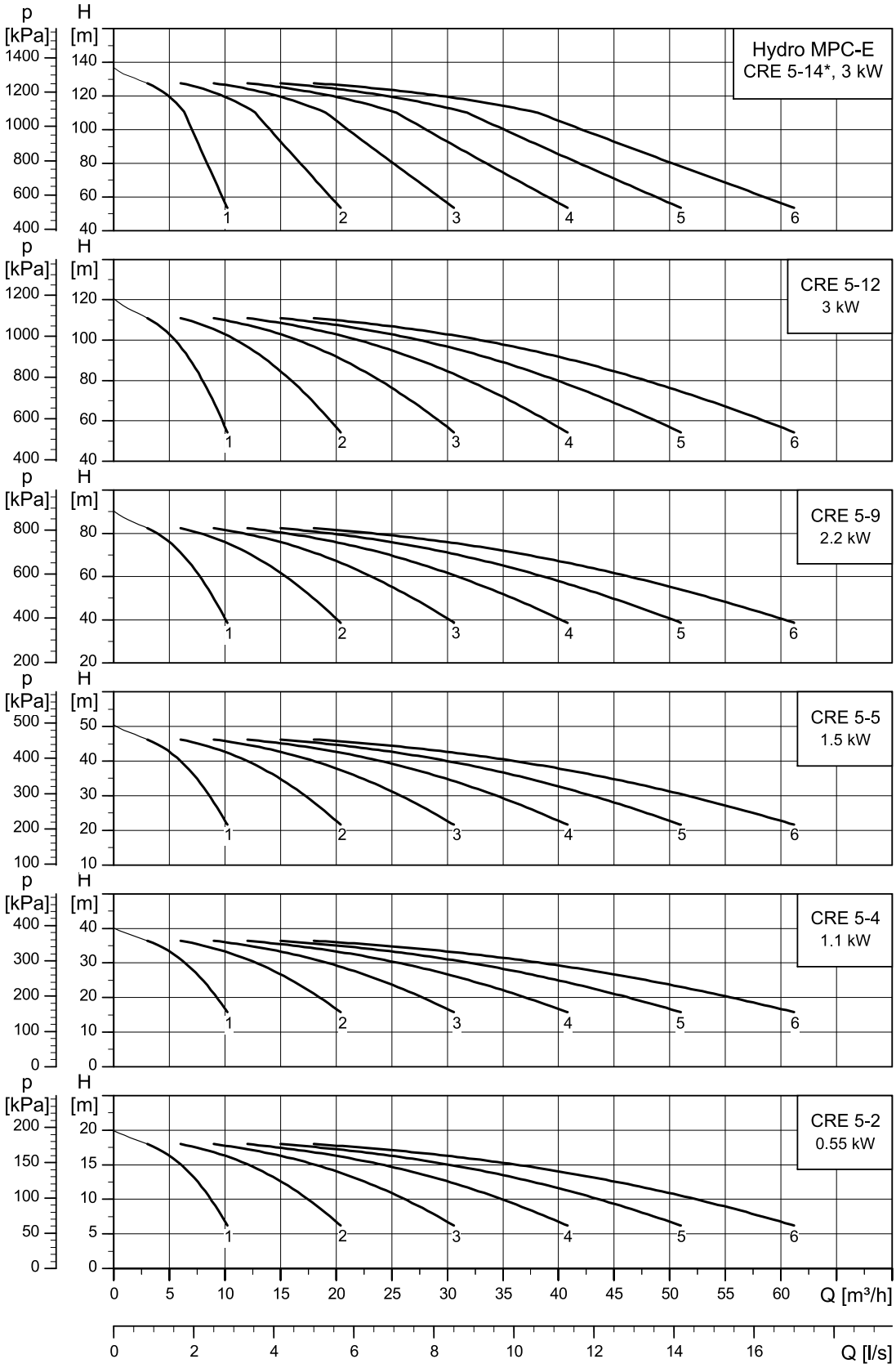

* For undersized motors, the maximum speed depends on the power usage.
Losses in fittings and valves are not included.

Dimensional sketch

Below is the dimensional sketch of a system in different designs. The system is shown as an example. The pumps supplied may differ from the sketch.

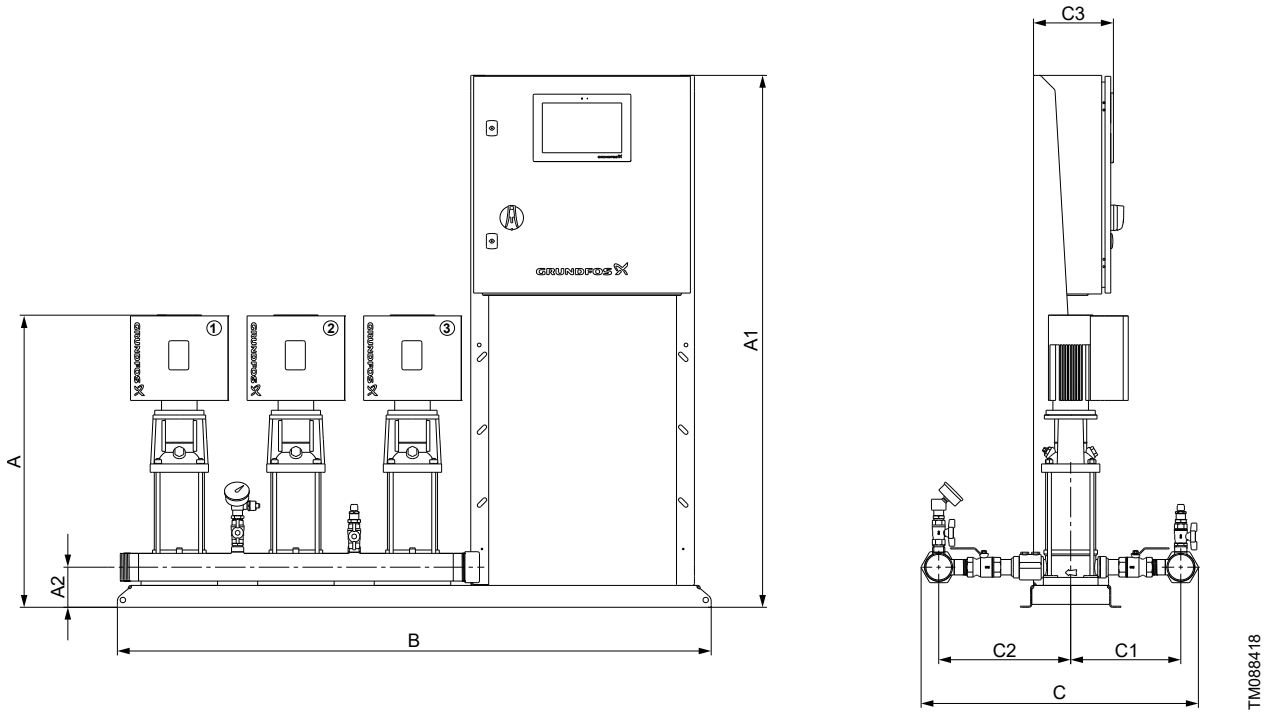

Design GA

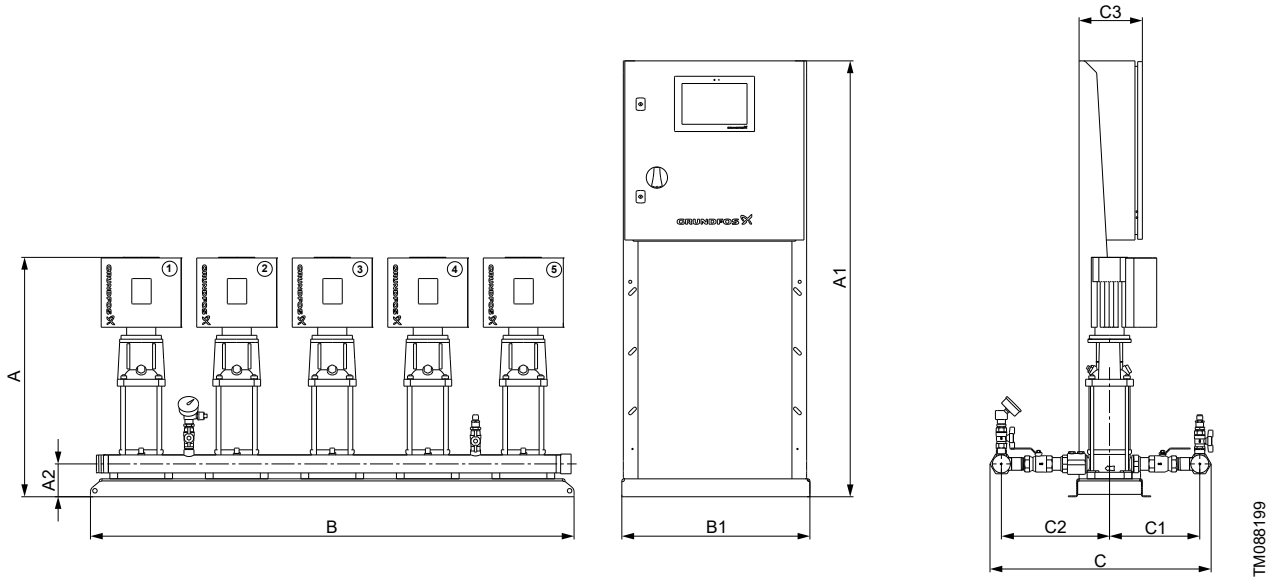

Design GD

Electrical data, dimensions and weights

Number of pumps	Pump type	Motor power [kW]	Motor type	Voltage code	Rated current [A]	Connections	A [mm]	A1 [mm]	A2 [mm]	B [mm]	B1 [mm]	C [mm]	C1 [mm]	C2 [mm]	C3 [mm]	Net weight [kg]	Design
2	CRE 5-2	0.55	❍	V1	3.04	R 2	533	1460	112	1050	-	726	295	355	210	89	GA
	CRE 5-4	1.1	❍	V1	5.88	R 2	593	1460	112	1050	-	726	295	355	210	96	GA
	CRE 5-5	1.5	●	V2	2.82	R 2	696	1460	112	1050	-	726	295	355	210	105	GA
	CRE 5-9	2.2	●	V2	4.03	R 2	804	1460	112	1050	-	726	295	355	210	113	GA
	CRE 5-12	3	●	V2	5.63	R 2	950	1460	112	1050	-	726	295	355	210	131	GA
	CRE 5-14 [7)]	3	●	V2	5.63	R 2	1004	1460	112	1050	-	726	295	355	210	133	GA
3	CRE 5-2	0.55	❍	V1	3.04	R 2	533	1460	112	1370	-	726	295	355	210	117	GA
	CRE 5-4	1.1	❍	V1	5.88	R 2	593	1460	112	1370	-	726	295	355	210	127	GA
	CRE 5-5	1.5	●	V2	2.82	R 2	696	1460	112	1370	-	726	295	355	210	142	GA
	CRE 5-9	2.2	●	V2	4.03	R 2	804	1460	112	1370	-	726	295	355	210	164	GA
	CRE 5-12	3	●	V2	5.63	R 2	950	1460	112	1370	-	726	295	355	210	180	GA
	CRE 5-14 [7)]	3	●	V2	5.63	R 2	1004	1460	112	1370	-	726	295	355	210	183	GA
4	CRE 5-2	0.55	❍	V1	3.04	R 2 1/2	533	1460	112	1690	-	741	295	355	210	160	GA
	CRE 5-4	1.1	❍	V1	5.88	R 2 1/2	593	1460	112	1690	-	741	295	355	210	173	GA
	CRE 5-5	1.5	●	V2	2.82	R 2 1/2	696	1460	112	1690	-	741	295	355	210	182	GA
	CRE 5-9	2.2	●	V2	4.03	R 2 1/2	804	1460	112	1690	-	741	295	355	210	208	GA
	CRE 5-12	3	●	V2	5.63	R 2 1/2	950	1460	112	1690	-	741	295	355	210	232	GA
	CRE 5-14 [7)]	3	●	V2	5.63	R 2 1/2	1004	1460	112	1690	-	741	295	355	210	237	GA
5	CRE 5-2	0.55	❍	V1	3.04	R 2 1/2	533	1460	112	1565	430	741	295	355	210	198	GD
	CRE 5-4	1.1	❍	V1	5.88	R 2 1/2	593	1460	112	1565	600	741	295	355	210	215	GD
	CRE 5-5	1.5	●	V2	2.82	R 2 1/2	696	1460	112	1565	600	741	295	355	210	240	GD
	CRE 5-9	2.2	●	V2	4.03	R 2 1/2	804	1460	112	1565	600	741	295	355	210	258	GD
	CRE 5-12	3	●	V2	5.63	R 2 1/2	950	1460	112	1565	600	741	295	355	210	302	GD
	CRE 5-14 [7)]	3	●	V2	5.63	R 2 1/2	1004	1460	112	1565	600	741	295	355	210	308	GD
6	CRE 5-2	0.55	❍	V1	3.04	R 2 1/2	533	1460	112	1885	430	741	295	355	210	228	GD
	CRE 5-4	1.1	❍	V1	5.88	R 2 1/2	593	1460	112	1885	600	741	295	355	210	248	GD
	CRE 5-5	1.5	●	V2	2.82	R 2 1/2	696	1460	112	1885	600	741	295	355	210	278	GD
	CRE 5-9	2.2	●	V2	4.03	R 2 1/2	804	1460	112	1885	600	741	295	355	210	301	GD
	CRE 5-12	3	●	V2	5.63	R 2 1/2	950	1460	112	1885	600	741	295	355	210	353	GD
	CRE 5-14 [7)]	3	●	V2	5.63	R 2 1/2	1004	1460	112	1885	600	741	295	355	210	361	GD

7) Pump with undersized motor

Legend

- ● Three-phase motors
- ❍ Single-phase motors
- - Not applicable

Explanation

- Motor power is the power per pump.
- Rated current: Additional current applies for the control circuit depending on design.
- Voltage code, V1: 3 × 400 V ± 5 %, 50 Hz, N, PE.
- Voltage code, V2: 3 × 400 V ± 5 %, 50 Hz, PE.
- Design GA: The pumps and the control panel are mounted on the same base frame.
- Design GD: The pumps and the control panel are mounted on their own base frames. The base frames are separated. The control panel can be placed up to 3 meters from the pumps.
- Dimensions may vary by ± 10 mm.

Hydro MPC-E with CRE 10

Curve charts

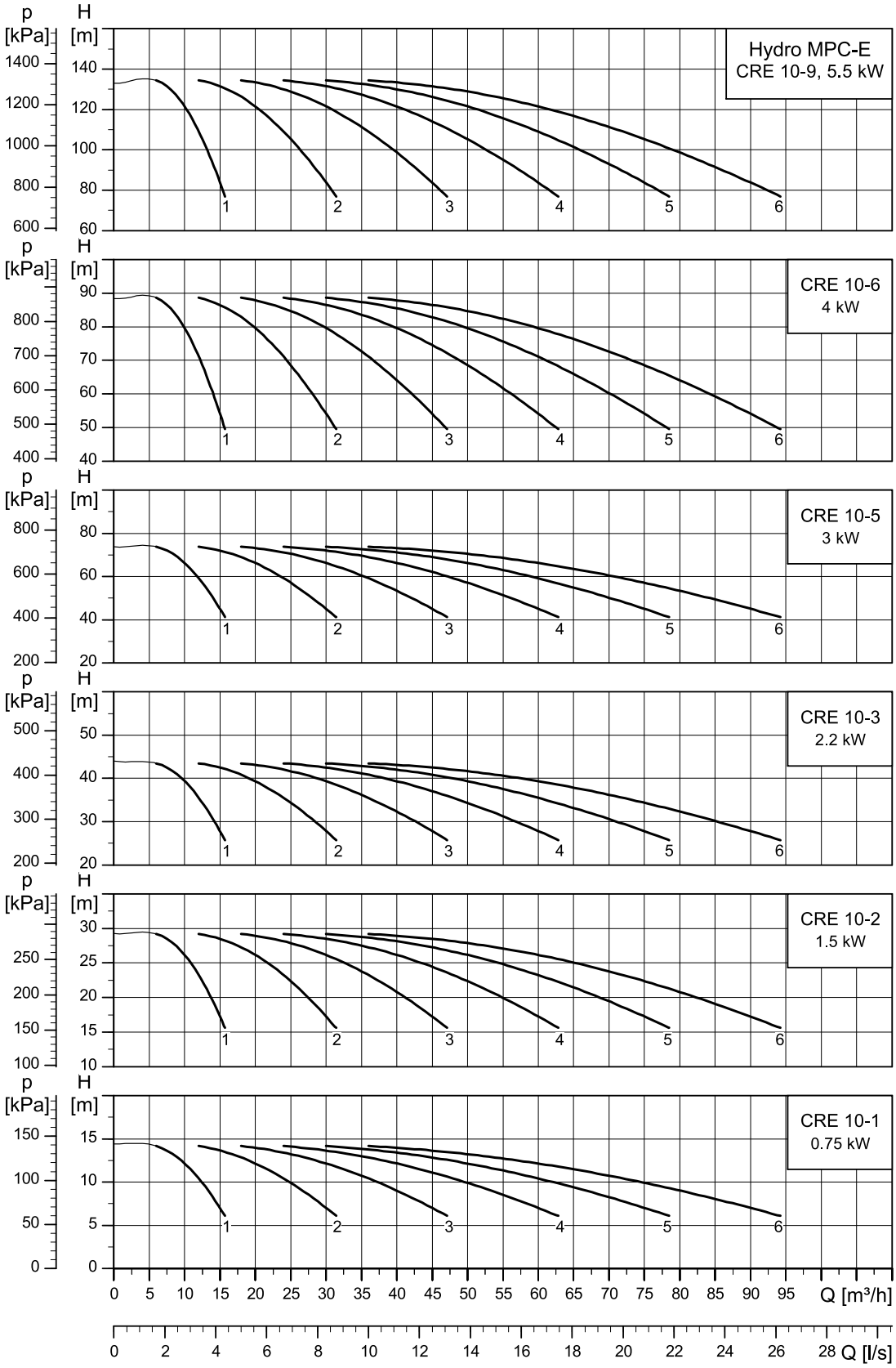

Losses in fittings and valves are not included.

Dimensional sketch

Below is the dimensional sketch of a system in different designs. The system is shown as an example. The pumps supplied may differ from the sketch.

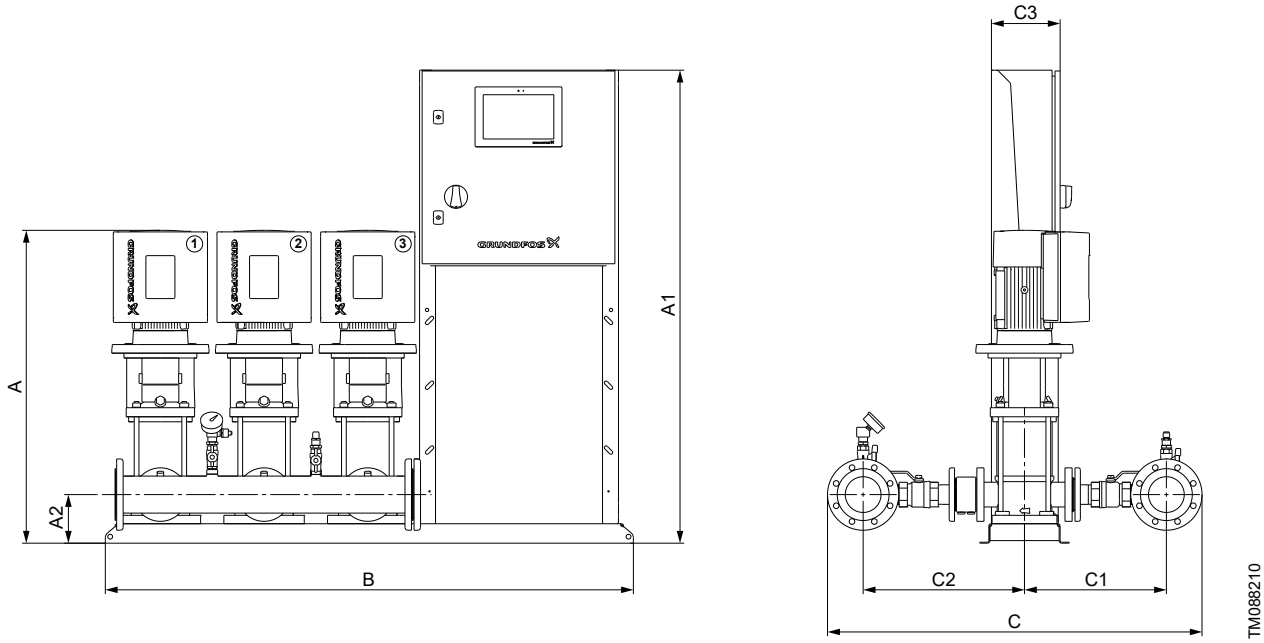

Design GA

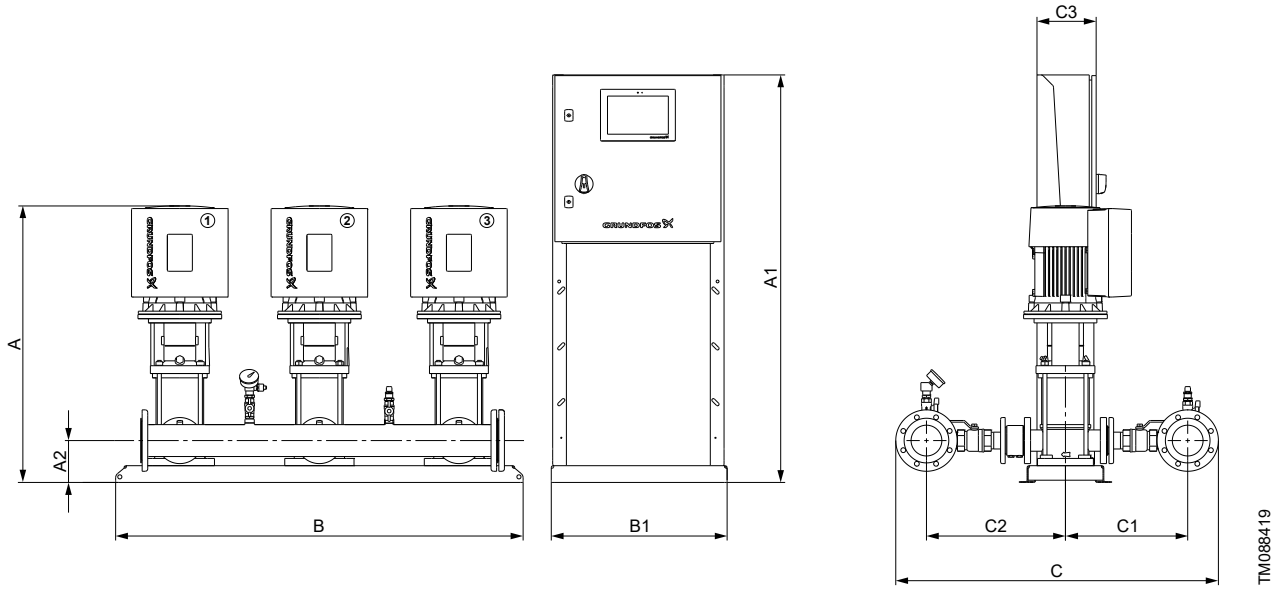

Design GD

Electrical data, dimensions and weights

Number of pumps	Pump type	Motor power [kW]	Motor type	Voltage code	Rated current [A]	Connections	A [mm]	A1 [mm]	A2 [mm]	B [mm]	B1 [mm]	C [mm]	C1 [mm]	C2 [mm]	C3 [mm]	Net weight [kg]	Design
2	CRE 10-1	0.75	❍	V1	4.1	R 2 1/2	633	1460	142	1080	-	891	371	431	210	125	GA
	CRE 10-2	1.5	●	V2	2.82	R 2 1/2	709	1460	142	1080	-	891	371	431	210	137	GA
	CRE 10-3	2.2	●	V2	4.03	R 2 1/2	739	1460	142	1080	-	891	371	431	210	143	GA
	CRE 10-5	3	●	V2	5.63	R 2 1/2	864	1460	142	1080	-	891	371	431	210	159	GA
	CRE 10-6	4	●	V2	7.37	R 2 1/2	894	1460	142	1080	-	891	371	431	210	167	GA
	CRE 10-9	5.5	●	V2	9.95	R 2 1/2	1047	1460	142	1080	-	891	371	431	210	216	GA
3	CRE 10-1	0.75	❍	V1	4.1	DN 80	633	1460	142	1400	-	1000	371	431	210	186	GA
	CRE 10-2	1.5	●	V2	2.82	DN 80	709	1460	142	1400	-	1000	371	431	210	205	GA
	CRE 10-3	2.2	●	V2	4.03	DN 80	739	1460	142	1400	-	1000	371	431	210	225	GA
	CRE 10-5	3	●	V2	5.63	DN 80	864	1460	142	1400	-	1000	371	431	210	238	GA
	CRE 10-6	4	●	V2	7.37	DN 80	894	1460	142	1400	-	1000	371	431	210	262	GA
	CRE 10-9	5.5	●	V2	9.95	DN 80	1047	1460	142	1400	-	1000	371	431	210	334	GA
4	CRE 10-1	0.75	❍	V1	4.1	DN 80	633	1460	142	1720	-	1000	371	431	210	244	GA
	CRE 10-2	1.5	●	V2	2.82	DN 80	709	1460	142	1720	-	1000	371	431	210	257	GA
	CRE 10-3	2.2	●	V2	4.03	DN 80	739	1460	142	1920	-	1000	371	431	210	281	GA
	CRE 10-5	3	●	V2	5.63	DN 80	864	1460	142	1720	-	1000	371	431	210	301	GA
	CRE 10-6	4	●	V2	7.37	DN 80	894	1460	142	1720	-	1000	371	431	210	329	GA
	CRE 10-9	5.5	●	V2	9.95	DN 80	1047	1460	142	1920	-	1000	371	431	210	426	GA
5	CRE 10-1	0.75	❍	V1	4.1	DN 100	633	1460	142	1642	430	1020	371	431	210	301	GD
	CRE 10-2	1.5	●	V2	2.82	DN 100	709	1460	142	1642	600	1020	371	431	210	333	GD
	CRE 10-3	2.2	●	V2	4.03	DN 100	739	1460	142	1642	600	1020	371	431	210	348	GD
	CRE 10-5	3	●	V2	5.63	DN 100	864	1460	142	1642	600	1020	371	431	210	388	GD
	CRE 10-6	4	●	V2	7.37	DN 100	894	1460	142	1642	600	1020	371	431	210	410	GD
	CRE 10-9	5.5	●	V2	9.95	DN 100	1047	1460	142	1642	600	1020	371	431	210	531	GD
6	CRE 10-1	0.75	❍	V1	4.1	DN 100	633	1460	142	1962	430	1020	371	431	210	354	GD
	CRE 10-2	1.5	●	V2	2.82	DN 100	709	1460	142	1962	600	1020	371	431	210	392	GD
	CRE 10-3	2.2	●	V2	4.03	DN 100	739	1460	142	1962	600	1020	371	431	210	410	GD
	CRE 10-5	3	●	V2	5.63	DN 100	864	1460	142	1962	600	1020	371	431	210	458	GD
	CRE 10-6	4	●	V2	7.37	DN 100	894	1460	142	1962	600	1020	371	431	210	484	GD
	CRE 10-9	5.5	●	V2	9.95	DN 100	1047	1460	142	1962	600	1020	371	431	210	631	GD

Legend

- ● Three-phase motors
- ❍ Single-phase motors
- - Not applicable

Explanation

- Motor power is the power per pump.
- Rated current: Additional current applies for the control circuit depending on design.
- Voltage code, V1: 3 × 400 V ± 5 %, 50 Hz, N, PE.
- Voltage code, V2: 3 × 400 V ± 5 %, 50 Hz, PE.
- Design GA: The pumps and the control panel are mounted on the same base frame.
- Design GD: The pumps and the control panel are mounted on their own base frames. The base frames are separated. The control panel can be placed up to 3 meters from the pumps.
- Dimensions may vary by ± 10 mm.

Hydro MPC-E with CRE 15

Curve charts

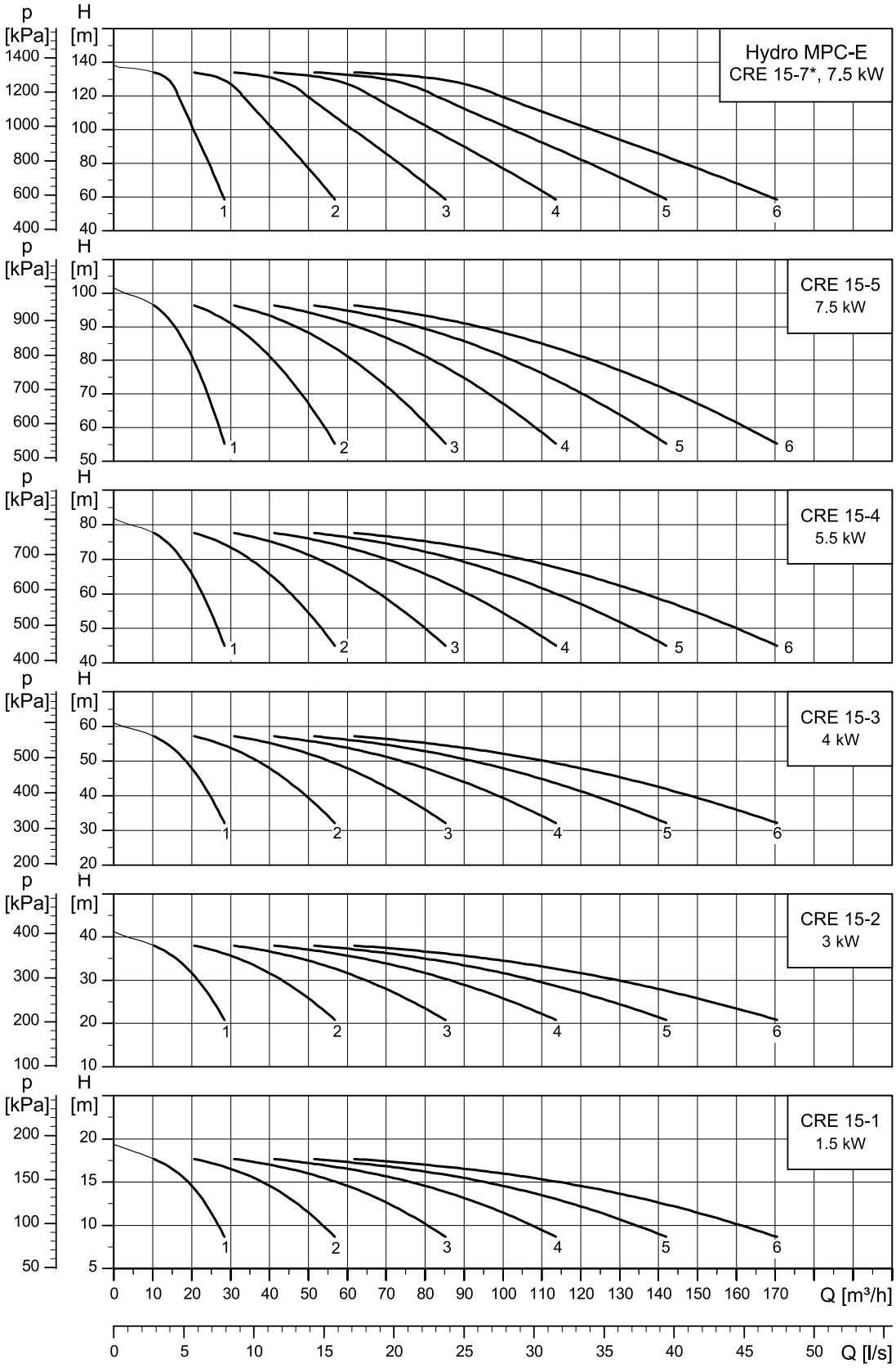

* For undersized motors, the maximum speed depends on the power usage.
Losses in fittings and valves are not included.

Dimensional sketch

Below is the dimensional sketch of a system in different designs. The system is shown as an example. The pumps supplied may differ from the sketch.

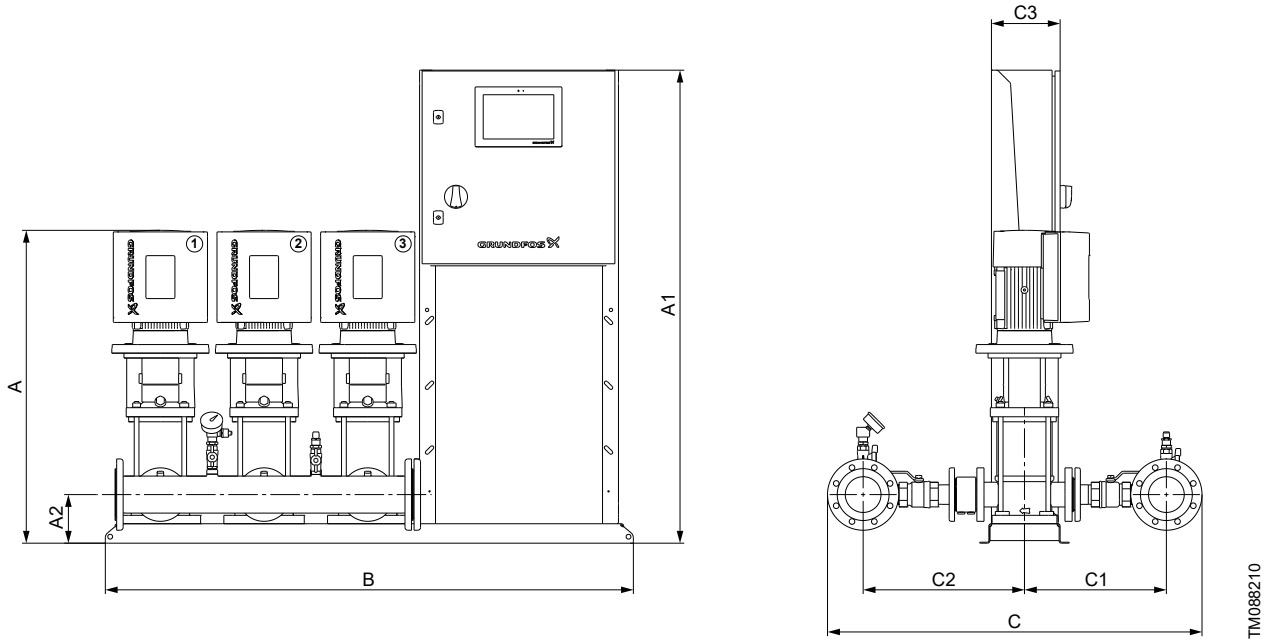

Design GA

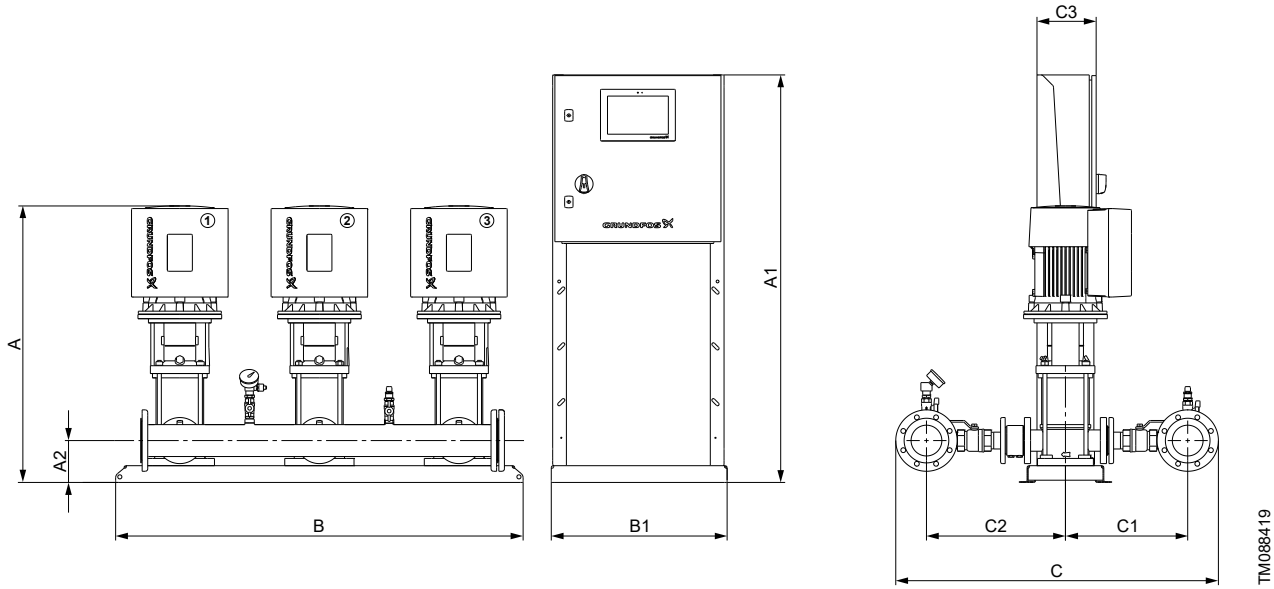

Design GD

Electrical data, dimensions and weights

Number of pumps	Pump type	Motor power [kW]	Motor type	Voltage code	Rated current [A]	Connections	A [mm]	A1 [mm]	A2 [mm]	B [mm]	B1 [mm]	C [mm]	C1 [mm]	C2 [mm]	C3 [mm]	Net weight [kg]	Design
2	CRE 15-1	1.5	●	V2	2.82	DN 80	749	1460	152	1110	-	1135	438	497	210	164	GA
	CRE 15-2	3	●	V2	5.63	DN 80	814	1460	152	1110	-	1135	438	497	210	182	GA
	CRE 15-3	4	●	V2	7.37	DN 80	859	1460	152	1110	-	1135	438	497	210	191	GA
	CRE 15-4	5.5	●	V2	9.95	DN 80	967	1460	152	1110	-	1135	438	497	210	235	GA
	CRE 15-5	7.5	●	V2	13.6	DN 80	1036	1460	152	1022	430	1135	438	497	210	275	GD
	CRE 15-7 [8)]	7.5	●	V2	13.6	DN 80	1126	1460	152	1022	430	1135	438	497	210	281	GD
3	CRE 15-1	1.5	●	V2	2.82	DN 100	749	1460	152	1430	-	1155	438	497	210	227	GA
	CRE 15-2	3	●	V2	5.63	DN 100	814	1460	152	1430	-	1155	438	497	210	254	GA
	CRE 15-3	4	●	V2	7.37	DN 100	859	1460	152	1430	-	1155	438	497	210	277	GA
	CRE 15-4	5.5	●	V2	9.95	DN 100	967	1460	152	1430	-	1155	438	497	210	343	GA
	CRE 15-5	7.5	●	V2	13.6	DN 100	1036	1460	152	1522	430	1155	438	497	210	388	GD
	CRE 15-7 [8)]	7.5	●	V2	13.6	DN 100	1126	1460	152	1522	430	1155	438	497	210	397	GD
4	CRE 15-1	1.5	●	V2	2.82	DN 100	749	1460	152	1790	-	1155	438	497	210	285	GA
	CRE 15-2	3	●	V2	5.63	DN 100	814	1460	152	1790	-	1155	438	497	210	321	GA
	CRE 15-3	4	●	V2	7.37	DN 100	859	1460	152	1950	-	1155	438	497	210	349	GA
	CRE 15-4	5.5	●	V2	9.95	DN 100	967	1460	152	1950	-	1155	438	497	210	438	GA
	CRE 15-5	7.5	●	V2	13.6	DN 100	1036	1460	152	2022	600	1155	438	497	210	497	GD
	CRE 15-7 [8)]	7.5	●	V2	13.6	DN 100	1126	1460	152	2022	600	1155	438	497	210	509	GD
5	CRE 15-1	1.5	●	V2	2.82	DN 150	749	1460	152	1704	600	1220	438	497	210	389	GD
	CRE 15-2	3	●	V2	5.63	DN 150	814	1460	152	1704	600	1220	438	497	210	434	GD
	CRE 15-3	4	●	V2	7.37	DN 150	859	1460	152	1704	600	1220	438	497	210	456	GD
	CRE 15-4	5.5	●	V2	9.95	DN 150	967	1460	152	1704	600	1220	438	497	210	567	GD
	CRE 15-5	7.5	●	V2	13.6	DN 150	1036	1460	152	2524	600	1220	438	497	210	648	GD
	CRE 15-7 [8)]	7.5	●	V2	13.6	DN 150	1126	1460	152	2524	600	1220	438	497	210	663	GD
6	CRE 15-1	1.5	●	V2	2.82	DN 150	749	1460	152	2024	600	1220	438	497	210	450	GD
	CRE 15-2	3	●	V2	5.63	DN 150	814	1460	152	2024	600	1220	438	497	210	504	GD
	CRE 15-3	4	●	V2	7.37	DN 150	859	1460	152	2024	600	1220	438	497	210	530	GD
	CRE 15-4	5.5	●	V2	9.95	DN 150	967	1460	152	2024	600	1220	438	497	210	664	GD
	CRE 15-5	7.5	●	V2	13.6	DN 150	1036	1460	152	3024	600	1220	438	497	210	766	GD
	CRE 15-7 [8)]	7.5	●	V2	13.6	DN 150	1126	1460	152	3024	600	1220	438	497	210	784	GD

8) Pump with undersized motor

Legend

- ● Three-phase motors
- - Not applicable

Explanation

- Motor power is the power per pump.
- Rated current: Additional current applies for the control circuit depending on design.
- Voltage code, V2: 3 × 400 V ± 5 %, 50 Hz, PE.
- Design GA: The pumps and the control panel are mounted on the same base frame.
- Design GD: The pumps and the control panel are mounted on their own base frames. The base frames are separated. The control panel can be placed up to 3 meters from the pumps.
- Dimensions may vary by ± 10 mm.

Hydro MPC-E with CRE 20

Curve charts

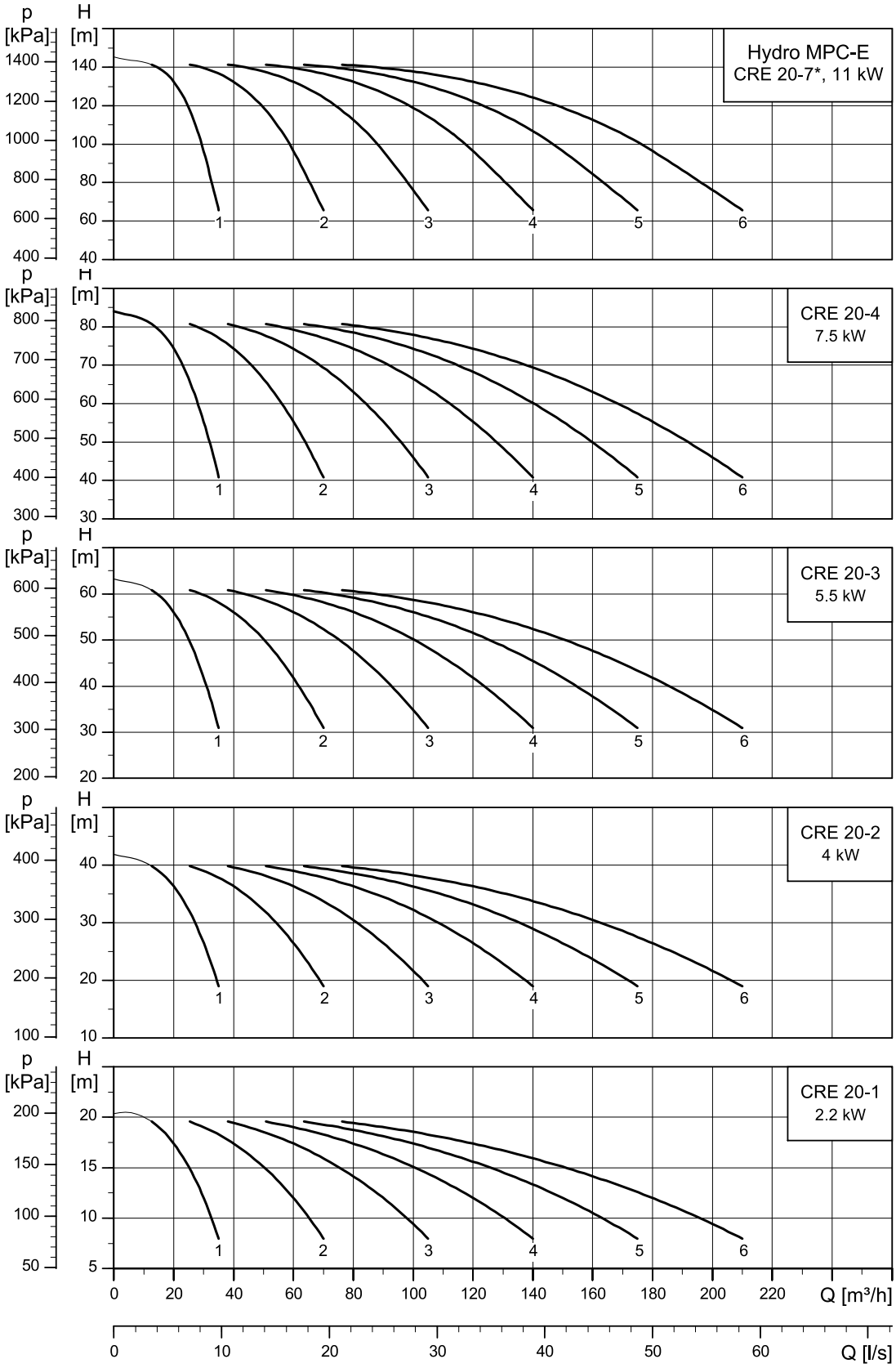

* For undersized motors, the maximum speed depends on the power usage.
Losses in fittings and valves are not included.

Dimensional sketch

Below is the dimensional sketch of a system in different designs. The system is shown as an example. The pumps supplied may differ from the sketch.

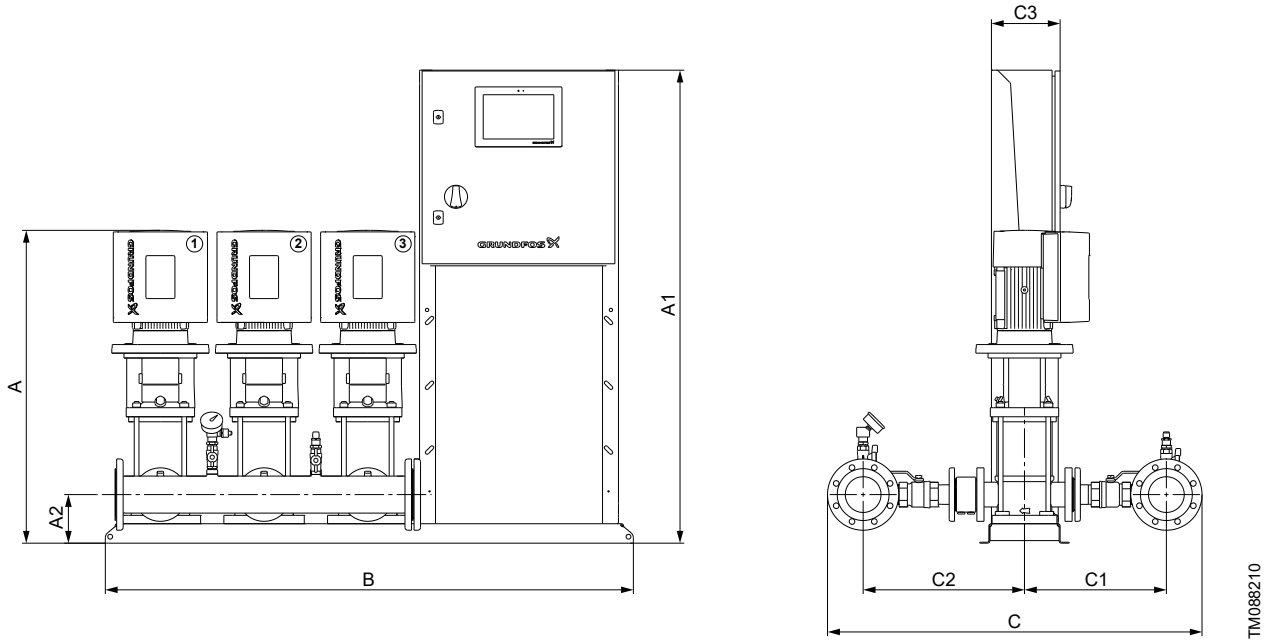

Design GA

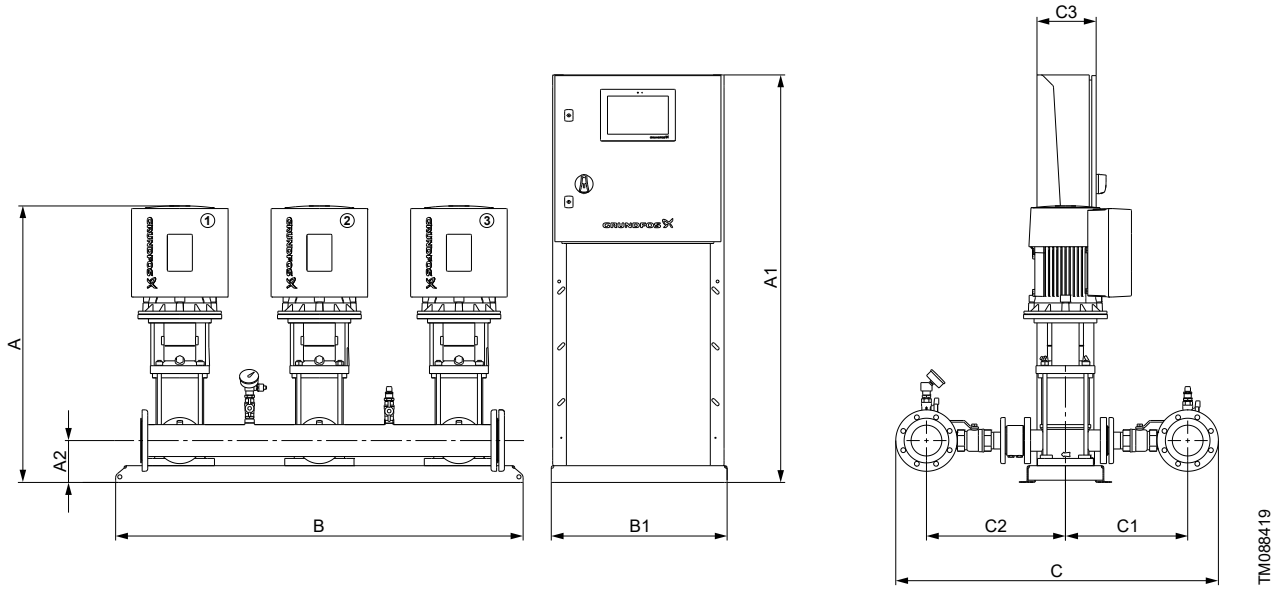

Design GD

Electrical data, dimensions and weights

Number of pumps	Pump type	Motor power [kW]	Motor type	Voltage code	Rated current [A]	Connections	A [mm]	A1 [mm]	A2 [mm]	B [mm]	B1 [mm]	C [mm]	C1 [mm]	C2 [mm]	C3 [mm]	Net weight [kg]	Design
2	CRE 20-1	2.2	●	V2	4.03	DN 80	749	1460	152	1110	-	1135	438	497	210	168	GA
	CRE 20-2	4	●	V2	7.37	DN 80	814	1460	152	1110	-	1135	438	497	210	189	GA
	CRE 20-3	5.5	●	V2	9.95	DN 80	922	1460	152	1110	-	1135	438	497	210	233	GA
	CRE 20-4	7.5	●	V2	13.6	DN 80	991	1460	152	1022	430	1135	438	497	210	271	GD
	CRE 20-7 [9]	11	●	V2	19.6	DN 80	1260	1460	192	1022	600	1135	438	497	210	331	GD
3	CRE 20-1	2.2	●	V2	4.03	DN 100	749	1460	152	1430	-	1155	438	497	210	244	GA
	CRE 20-2	4	●	V2	7.37	DN 100	814	1460	152	1430	-	1155	438	497	210	274	GA
	CRE 20-3	5.5	●	V2	9.95	DN 100	922	1460	152	1430	-	1155	438	497	210	340	GA
	CRE 20-4	7.5	●	V2	13.6	DN 100	991	1460	152	1522	430	1155	438	497	210	382	GD
	CRE 20-7 [9]	11	●	V2	19.6	DN 100	1260	1460	192	1522	600	1155	438	497	210	473	GD
4	CRE 20-1	2.2	●	V2	4.03	DN 100	749	1460	152	1950	-	1155	438	497	210	305	GA
	CRE 20-2	4	●	V2	7.37	DN 100	814	1460	152	1950	-	1155	438	497	210	345	GA
	CRE 20-3	5.5	●	V2	9.95	DN 100	922	1460	152	1950	-	1155	438	497	210	433	GA
	CRE 20-4	7.5	●	V2	13.6	DN 100	991	1460	152	2022	600	1155	438	497	210	489	GD
	CRE 20-7 [9]	11	●	V2	19.6	DN 100	1260	1460	192	2022	600	1155	438	497	210	616	GD
5	CRE 20-1	2.2	●	V2	4.03	DN 150	749	1460	152	1704	600	1220	438	497	210	399	GD
	CRE 20-2	4	●	V2	7.37	DN 150	814	1460	152	1704	600	1220	438	497	210	451	GD
	CRE 20-3	5.5	●	V2	9.95	DN 150	922	1460	152	1704	600	1220	438	497	210	562	GD
	CRE 20-4	7.5	●	V2	13.6	DN 150	991	1460	152	2524	600	1220	438	497	210	638	GD
	CRE 20-7 [9]	11	●	V2	19.6	DN 150	1260	1460	192	2524	600	1220	438	497	210	796	GD
6	CRE 20-1	2.2	●	V2	4.03	DN 150	749	1460	152	2024	600	1220	438	497	210	462	GD
	CRE 20-2	4	●	V2	7.37	DN 150	814	1460	152	2024	600	1220	438	497	210	524	GD
	CRE 20-3	5.5	●	V2	9.95	DN 150	922	1460	152	2024	600	1220	438	497	210	658	GD
	CRE 20-4	7.5	●	V2	13.6	DN 150	991	1460	152	3024	600	1220	438	497	210	754	GD
	CRE 20-7 [9]	11	●	V2	19.6	DN 150	1260	1460	192	3024	810	1220	438	497	210	934	GD

[9] Pump with undersized motor

Legend

- ● Three-phase motors
- - Not applicable

Explanation

- Motor power is the power per pump.
- Rated current: Additional current applies for the control circuit depending on design.
- Voltage code, V2: 3 × 400 V ± 5 %, 50 Hz, PE.
- Design GA: The pumps and the control panel are mounted on the same base frame.
- Design GD: The pumps and the control panel are mounted on their own base frames. The base frames are separated. The control panel can be placed up to 3 meters from the pumps.
- Dimensions may vary by ± 10 mm.

Hydro MPC-E with CRE 32

Curve charts

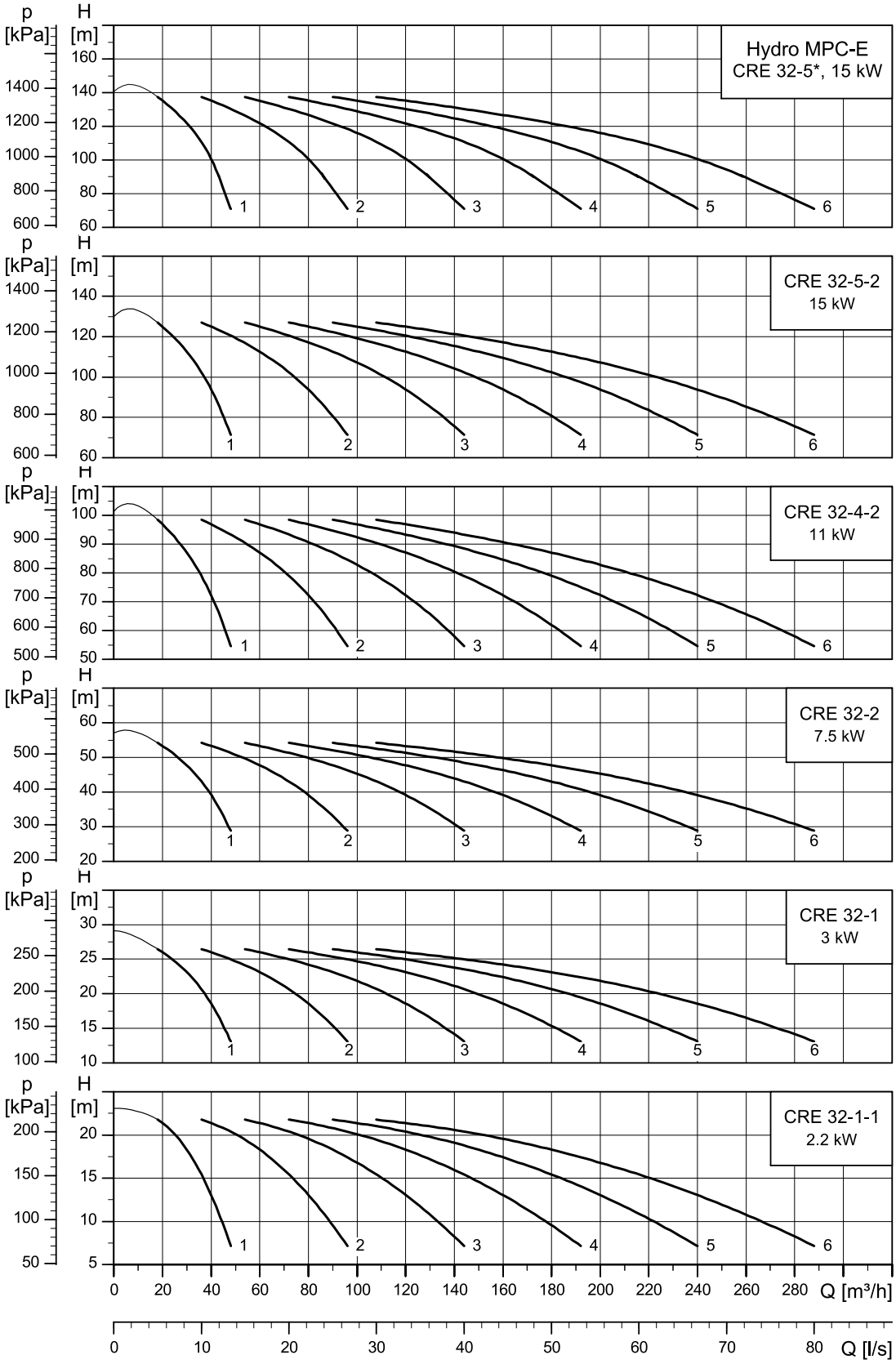

* For undersized motors, the maximum speed depends on the power usage.
Losses in fittings and valves are not included.

Dimensional sketch

Below is the dimensional sketch of a system in different designs. The system is shown as an example. The pumps supplied may differ from the sketch.

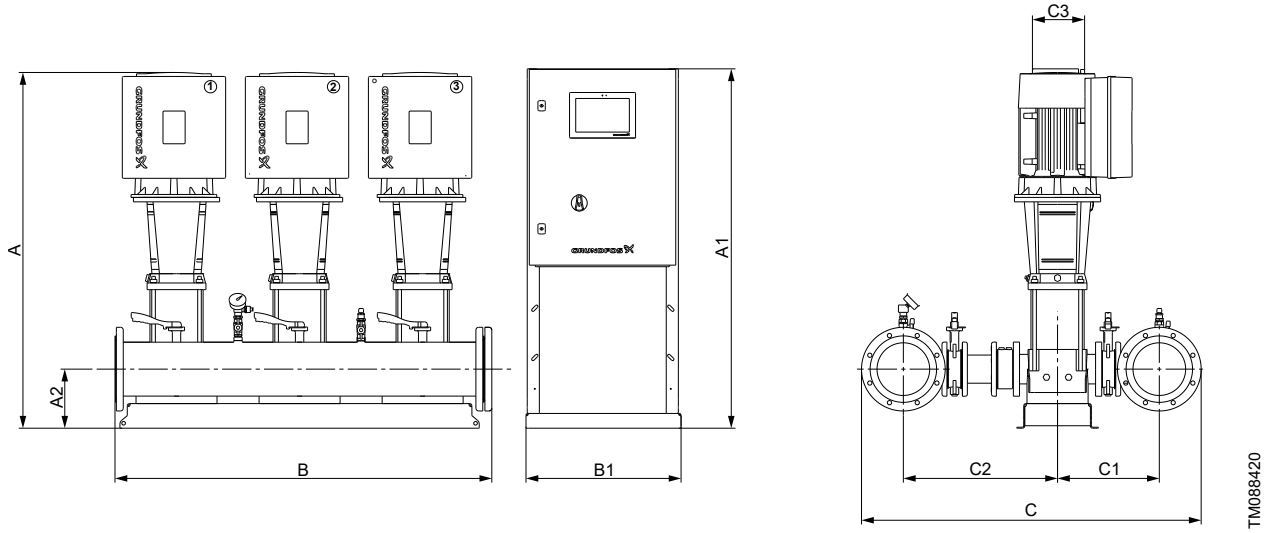

Design GD

Electrical data, dimensions and weights

Number of pumps	Pump type	Motor power [kW]	Motor type	Voltage code	Rated current [A]	Connections	A [mm]	A1 [mm]	A2 [mm]	B [mm]	B1 [mm]	C [mm]	C1 [mm]	C2 [mm]	C3 [mm]	Net weight [kg]	Design
2	CRE 32-1-1	2.2	●	V2	4.03	DN 100	841	1460	167	1022	430	1180	379	579	210	234	GD
	CRE 32-1	3	●	V2	5.63	DN 100	901	1460	167	1022	430	1180	379	579	210	246	GD
	CRE 32-2	7.5	●	V2	13.6	DN 100	1026	1460	167	1022	430	1180	379	579	210	307	GD
	CRE 32-4-2	11	●	V2	19.6	DN 100	1333	1460	207	1022	600	1180	379	579	210	378	GD
	CRE 32-5-2	15	●	V2	25.8	DN 100	1479	1460	207	1022	600	1180	379	579	210	436	GD
	CRE 32-5 [10)]	15	●	V2	25.8	DN 100	1479	1460	207	1022	600	1180	379	579	210	436	GD
3	CRE 32-1-1	2.2	●	V2	4.03	DN 150	841	1460	167	1524	430	1245	379	579	210	360	GD
	CRE 32-1	3	●	V2	5.63	DN 150	901	1460	167	1524	430	1245	379	579	210	366	GD
	CRE 32-2	7.5	●	V2	13.6	DN 150	1026	1460	167	1524	430	1245	379	579	210	451	GD
	CRE 32-4-2	11	●	V2	19.6	DN 150	1333	1460	207	1524	600	1245	379	579	210	560	GD
	CRE 32-5-2	15	●	V2	25.8	DN 150	1479	1460	207	1524	600	1245	379	579	210	653	GD
	CRE 32-5 [10)]	15	●	V2	25.8	DN 150	1479	1460	207	1524	600	1245	379	579	210	653	GD
4	CRE 32-1-1	2.2	●	V2	4.03	DN 150	841	1460	167	2024	600	1245	379	579	210	453	GD
	CRE 32-1	3	●	V2	5.63	DN 150	901	1460	167	2024	430	1245	379	579	210	465	GD
	CRE 32-2	7.5	●	V2	13.6	DN 150	1026	1460	167	2024	600	1245	379	579	210	576	GD
	CRE 32-4-2	11	●	V2	19.6	DN 150	1333	1460	207	2024	600	1245	379	579	210	726	GD
	CRE 32-5-2	15	●	V2	25.8	DN 150	1479	1460	207	2024	810	1245	379	579	210	844	GD
	CRE 32-5 [10)]	15	●	V2	25.8	DN 150	1479	1460	207	2024	810	1245	379	579	210	844	GD
5	CRE 32-1-1	2.2	●	V2	4.03	DN 150	841	1460	167	2524	600	1245	379	579	210	559	GD
	CRE 32-1	3	●	V2	5.63	DN 150	901	1460	167	2524	600	1245	379	579	210	590	GD
	CRE 32-2	7.5	●	V2	13.6	DN 150	1026	1460	167	2524	600	1245	379	579	210	714	GD
	CRE 32-4-2	11	●	V2	19.6	DN 150	1333	1460	207	2524	600	1245	379	579	210	900	GD
	CRE 32-5-2	15	●	V2	25.8	DN 150	1479	1460	207	2524	810	1245	379	579	210	1060	GD
	CRE 32-5 [10)]	15	●	V2	25.8	DN 150	1479	1460	207	2524	810	1245	379	579	210	1060	GD
6	CRE 32-1-1	2.2	●	V2	4.03	DN 150	841	1460	167	3024	600	1245	379	579	210	653	GD
	CRE 32-1	3	●	V2	5.63	DN 150	901	1460	167	3024	600	1245	379	579	210	690	GD
	CRE 32-2	7.5	●	V2	13.6	DN 150	1026	1460	167	3024	600	1245	379	579	210	845	GD
	CRE 32-4-2	11	●	V2	19.6	DN 150	1333	1460	207	3024	810	1245	379	579	210	1059	GD
	CRE 32-5-2	15	●	V2	25.8	DN 150	1479	1460	207	3024	810	1245	379	579	300	1250	GD
	CRE 32-5 [10)]	15	●	V2	25.8	DN 150	1479	1460	207	3024	810	1245	379	579	300	1250	GD

10) Pump with undersized motor

Legend

- ● Three-phase motors

Explanation

- Motor power is the power per pump.
- Rated current: Additional current applies for the control circuit depending on design.
- Voltage code, V2: 3 × 400 V ± 5 %, 50 Hz, PE.
- Design GD: The pumps and the control panel are mounted on their own base frames. The base frames are separated. The control panel can be placed up to 3 meters from the pumps.
- Dimensions may vary by ± 10 mm.

Hydro MPC-E with CRE 45

Curve charts

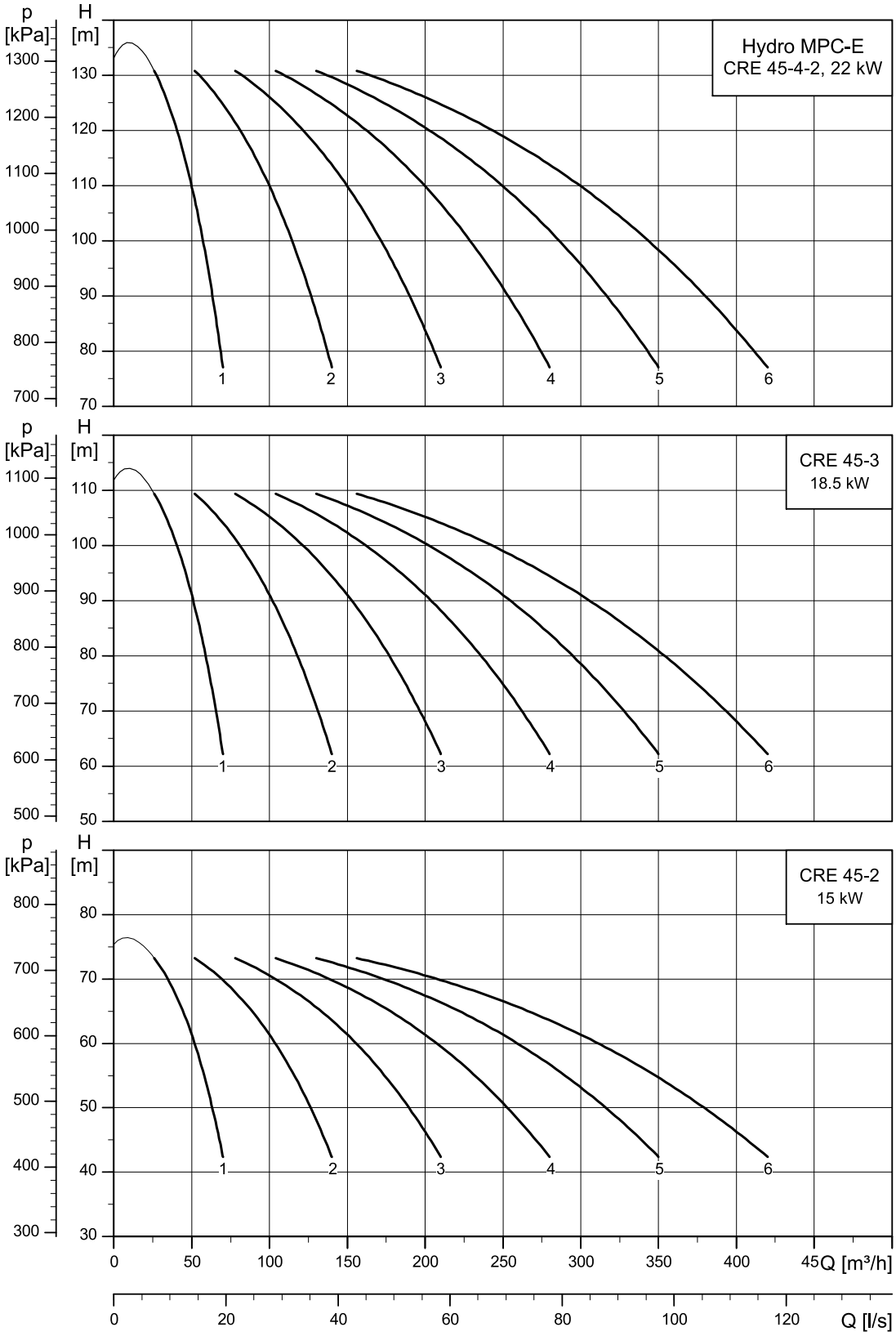

Losses in fittings and valves are not included.

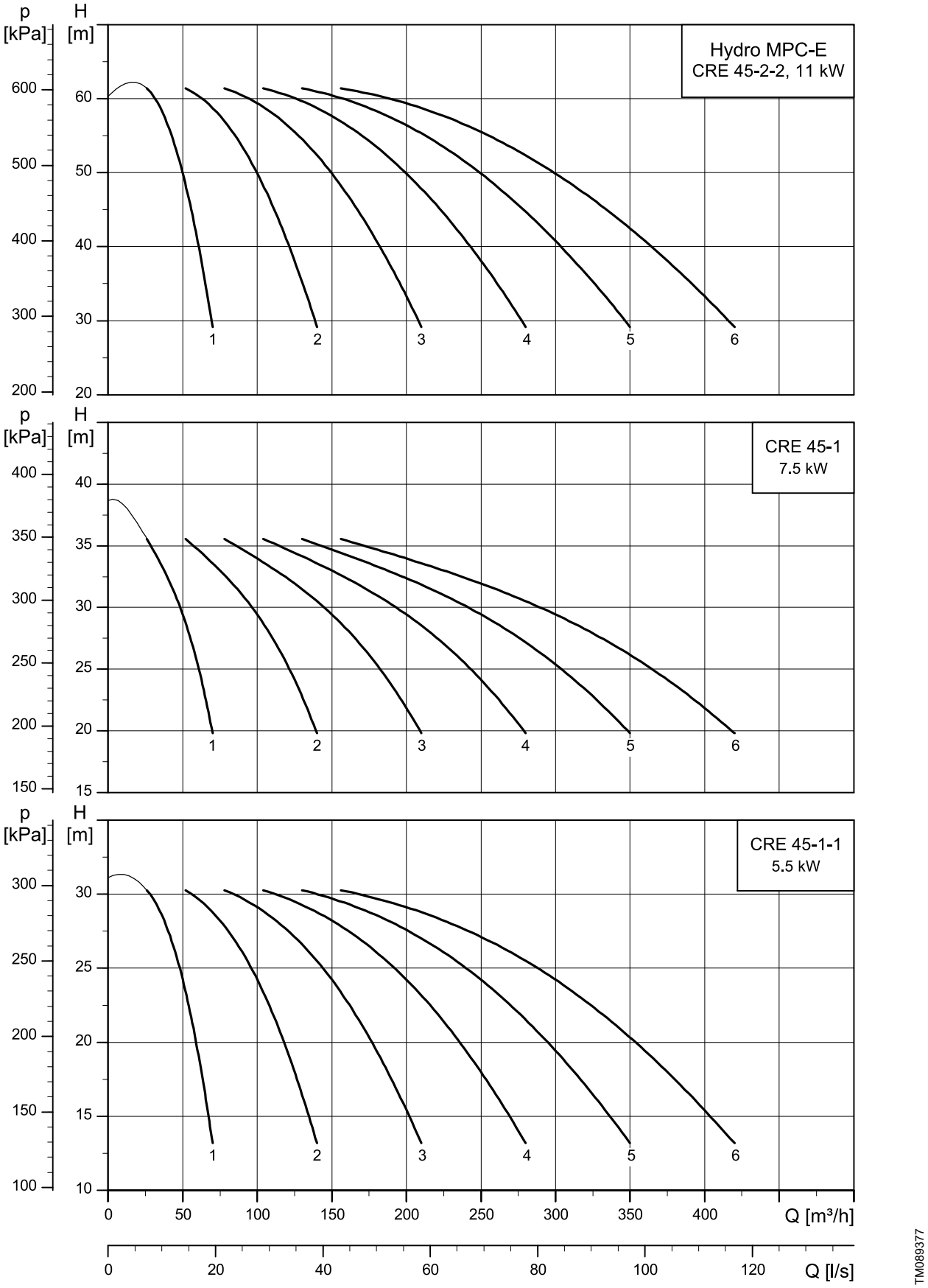

Losses in fittings and valves are not included.

Dimensional sketch

Below is the dimensional sketch of a system in different designs. The system is shown as an example. The pumps supplied may differ from the sketch.

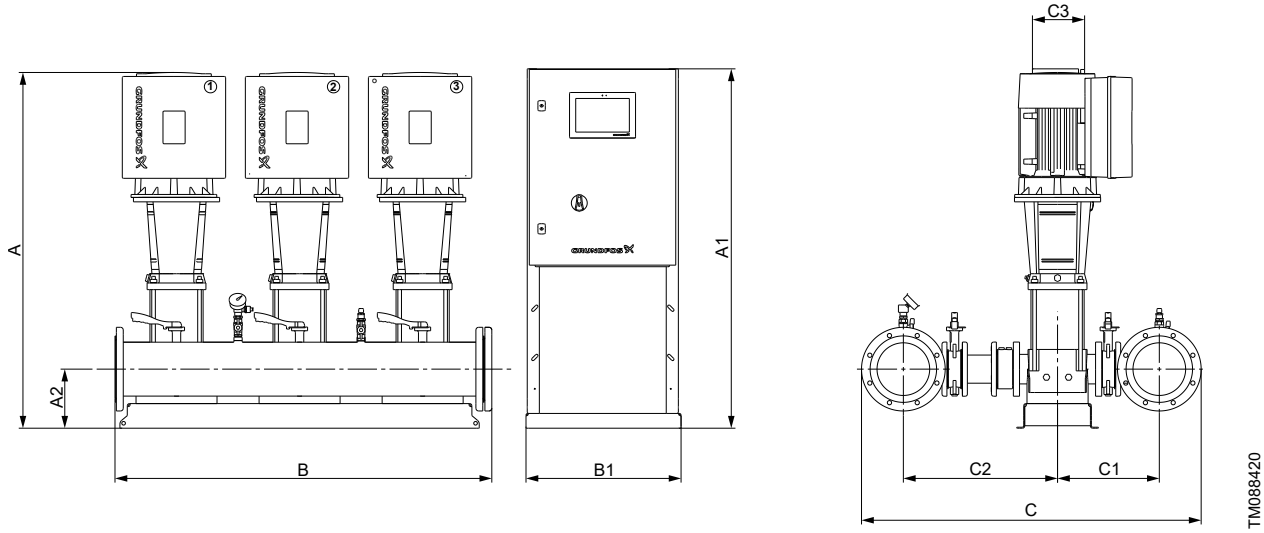

Design GD

Electrical data, dimensions and weights

Number of pumps	Pump type	Motor power [kW]	Motor type	Voltage code	Rated current [A]	Connections	A [mm]	A1 [mm]	A2 [mm]	B [mm]	B1 [mm]	C [mm]	C1 [mm]	C2 [mm]	C3 [mm]	Net weight [kg]	Design
2	CRE 45-1-1	5.5	●	V2	9.95	DN 150	986	1460	202	1024	430	1335	419	629	210	328	GD
	CRE 45-1	7.5	●	V2	13.6	DN 150	1010	1460	202	1024	430	1335	419	629	210	354	GD
	CRE 45-2-2	11	●	V2	19.6	DN 150	1257	1460	242	1024	600	1335	419	629	210	420	GD
	CRE 45-2	15	●	V2	25.8	DN 150	1333	1460	242	1024	600	1335	419	629	210	472	GD
	CRE 45-3	18.5	●	V2	32	DN 150	1413	1460	242	1024	600	1335	419	629	210	490	GD
	CRE 45-4-2	22	●	V2	37.7	DN 150	1519	1460	242	1024	600	1335	419	629	210	537	GD
3	CRE 45-1-1	5.5	●	V2	9.95	DN 200	986	1460	202	1526	430	1390	419	629	210	491	GD
	CRE 45-1	7.5	●	V2	13.6	DN 200	1010	1460	202	1526	430	1390	419	629	210	510	GD
	CRE 45-2-2	11	●	V2	19.6	DN 200	1257	1460	242	1526	600	1390	419	629	210	611	GD
	CRE 45-2	15	●	V2	25.8	DN 200	1333	1460	242	1526	600	1390	419	629	210	695	GD
	CRE 45-3	18.5	●	V2	32	DN 200	1413	1460	242	1526	600	1390	419	629	210	723	GD
	CRE 45-4-2	22	●	V2	37.7	DN 200	1519	1460	242	1526	600	1390	419	629	210	782	GD
4	CRE 45-1-1	5.5	●	V2	9.95	DN 200	986	1460	202	2026	600	1390	419	629	210	623	GD
	CRE 45-1	7.5	●	V2	13.6	DN 200	1010	1460	202	2026	600	1390	419	629	210	651	GD
	CRE 45-2-2	11	●	V2	19.6	DN 200	1257	1460	242	2026	600	1390	419	629	210	790	GD
	CRE 45-2	15	●	V2	25.8	DN 200	1333	1460	242	2026	810	1390	419	629	210	895	GD
	CRE 45-3	18.5	●	V2	32	DN 200	1413	1460	242	2026	810	1390	419	629	210	948	GD
	CRE 45-4-2	22	●	V2	37.7	DN 200	1519	1460	242	2026	810	1390	419	629	210	1027	GD
5	CRE 45-1-1	5.5	●	V2	9.95	DN 200	986	1460	202	2526	600	1390	419	629	210	773	GD
	CRE 45-1	7.5	●	V2	13.6	DN 200	1010	1460	202	2526	600	1390	419	629	210	807	GD
	CRE 45-2-2	11	●	V2	19.6	DN 200	1257	1460	242	2526	600	1390	419	629	210	980	GD
	CRE 45-2	15	●	V2	25.8	DN 200	1333	1460	242	2526	810	1390	419	629	210	1125	GD
	CRE 45-3	18.5	●	V2	32	DN 200	1413	1460	242	2526	810	1390	419	629	300	1171	GD
	CRE 45-4-2	22	●	V2	37.7	DN 200	1519	1460	242	2526	810	1390	419	629	300	1274	GD
6	CRE 45-1-1	5.5	●	V2	9.95	DN 200	986	1460	202	3026	600	1390	419	629	210	906	GD
	CRE 45-1	7.5	●	V2	13.6	DN 200	1010	1460	202	3026	600	1390	419	629	210	954	GD
	CRE 45-2-2	11	●	V2	19.6	DN 200	1257	1460	242	3026	810	1390	419	629	210	1153	GD
	CRE 45-2	15	●	V2	25.8	DN 200	1333	1460	242	3026	810	1390	419	629	300	1324	GD
	CRE 45-3	18.5	●	V2	32	DN 200	1413	1460	242	3026	810	1390	419	629	300	1384	GD
	CRE 45-4-2	22	●	V2	37.7	DN 200	1519	1460	242	3026	1050	1390	419	629	300	1597	GD

Legend

- ● Three-phase motors

Explanation

- Motor power is the power per pump.
- Rated current: Additional current applies for the control circuit depending on design.
- Voltage code, V2: 3 × 400 V ± 5 %, 50 Hz, PE.
- Design GD: The pumps and the control panel are mounted on their own base frames. The base frames are separated. The control panel can be placed up to 3 meters from the pumps.
- Dimensions may vary by ± 10 mm.

Hydro MPC-E with CRE 64

Curve charts

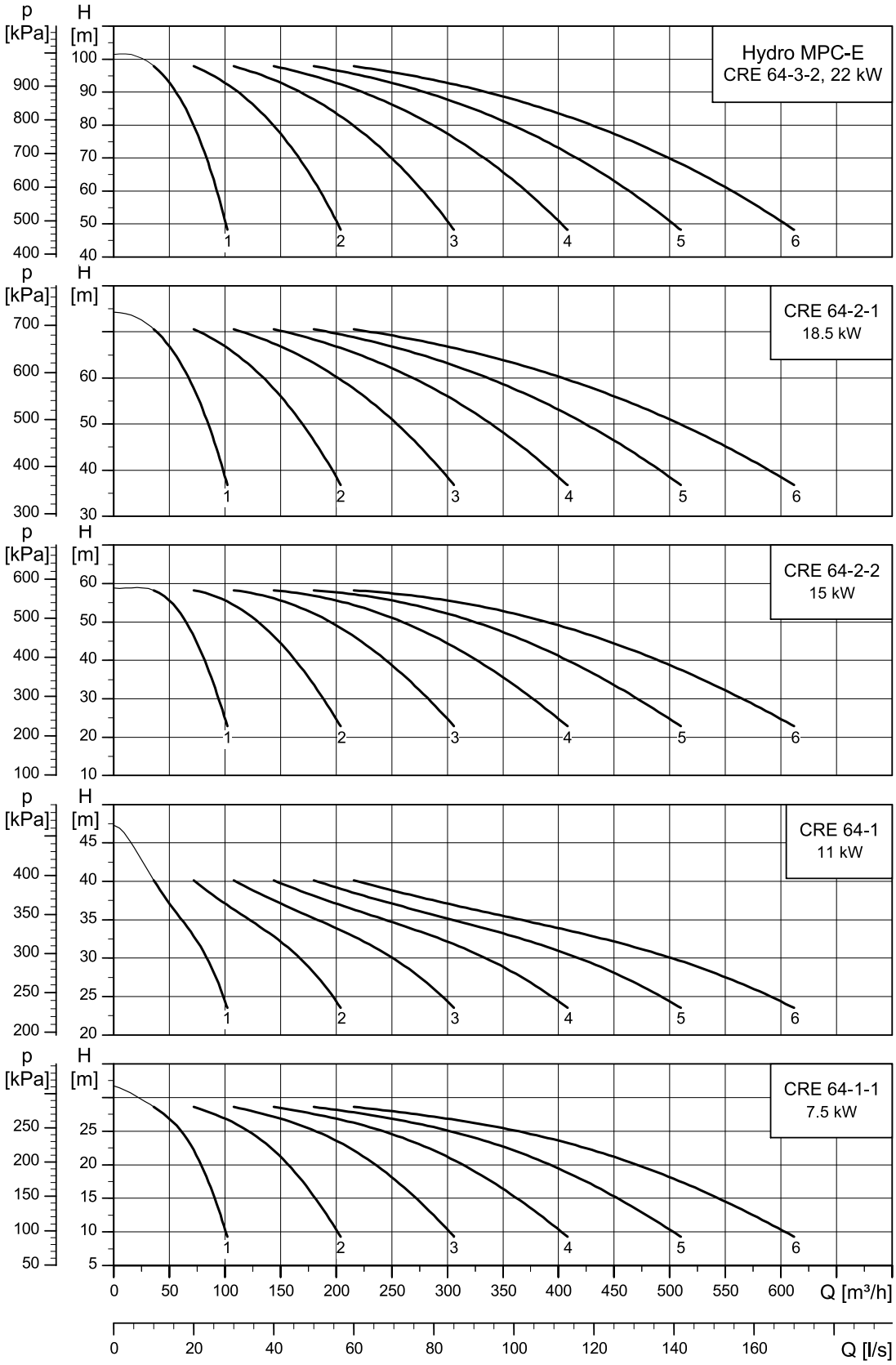

Losses in fittings and valves are not included.

Dimensional sketch

Below is the dimensional sketch of a system in different designs. The system is shown as an example. The pumps supplied may differ from the sketch.

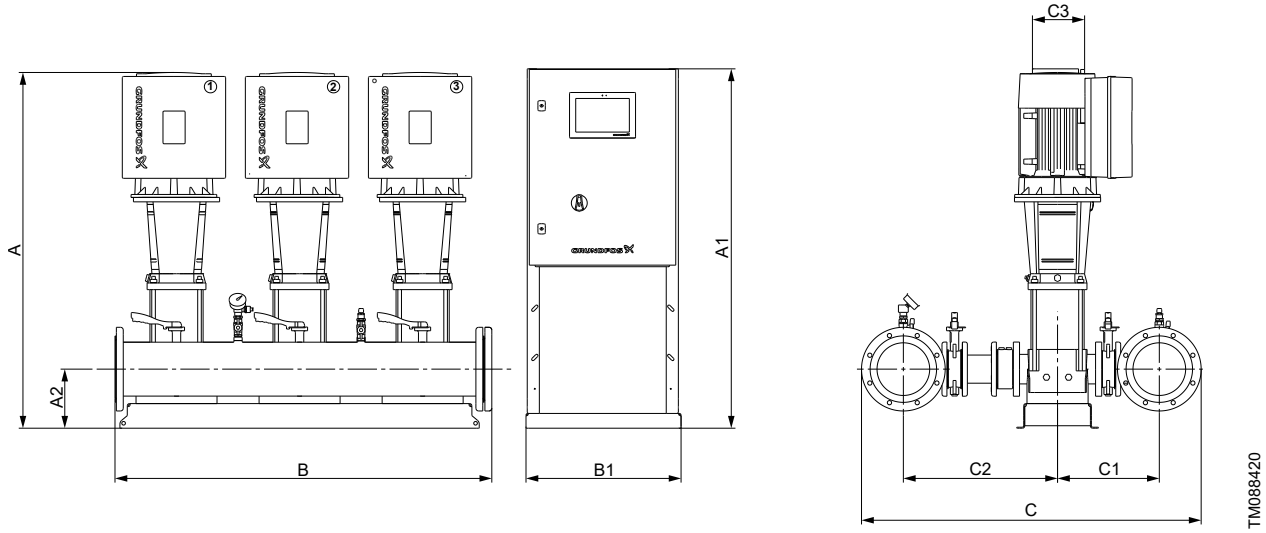

Design GD

Electrical data, dimensions and weights

Number of pumps	Pump type	Motor power [kW]	Motor type	Voltage code	Rated current [A]	Connections	A [mm]	A1 [mm]	A2 [mm]	B [mm]	B1 [mm]	C [mm]	C1 [mm]	C2 [mm]	C3 [mm]	Net weight [kg]	Design
2	CRE 64-1-1	7.5	●	V2	13.6	DN 150	1012	1460	202	1024	430	1335	421	631	210	360	GD
	CRE 64-1	11	●	V2	19.6	DN 150	1179	1460	242	1024	600	1335	421	631	210	419	GD
	CRE 64-2-2	15	●	V2	25.8	DN 150	1338	1460	242	1024	600	1335	421	631	210	479	GD
	CRE 64-2-1	18.5	●	V2	32	DN 150	1338	1460	242	1024	600	1335	421	631	210	490	GD
	CRE 64-3-2	22	●	V2	37.7	DN 150	1446	1460	242	1024	600	1335	421	631	210	538	GD
3	CRE 64-1-1	7.5	●	V2	13.6	DN 200	1012	1460	202	1526	430	1390	421	631	210	519	GD
	CRE 64-1	11	●	V2	19.6	DN 200	1179	1460	242	1526	600	1390	421	631	210	608	GD
	CRE 64-2-2	15	●	V2	25.8	DN 200	1338	1460	242	1526	600	1390	421	631	210	705	GD
	CRE 64-2-1	18.5	●	V2	32	DN 200	1338	1460	242	1526	600	1390	421	631	210	722	GD
	CRE 64-3-2	22	●	V2	37.7	DN 200	1446	1460	242	1526	600	1390	421	631	210	783	GD
4	CRE 64-1-1	7.5	●	V2	13.6	DN 200	1012	1460	202	2026	600	1390	421	631	210	662	GD
	CRE 64-1	11	●	V2	19.6	DN 200	1179	1460	242	2026	600	1390	421	631	210	787	GD
	CRE 64-2-2	15	●	V2	25.8	DN 200	1338	1460	242	2026	810	1390	421	631	210	910	GD
	CRE 64-2-1	18.5	●	V2	32	DN 200	1338	1460	242	2026	810	1390	421	631	210	947	GD
	CRE 64-3-2	22	●	V2	37.7	DN 200	1446	1460	242	2026	810	1390	421	631	210	1028	GD
5	CRE 64-1-1	7.5	●	V2	13.6	DN 200	1012	1460	202	2526	600	1390	421	631	210	821	GD
	CRE 64-1	11	●	V2	19.6	DN 200	1179	1460	242	2526	600	1390	421	631	210	976	GD
	CRE 64-2-2	15	●	V2	25.8	DN 200	1338	1460	242	2526	810	1390	421	631	210	1139	GD
	CRE 64-2-1	18.5	●	V2	32	DN 200	1338	1460	242	2526	810	1390	421	631	300	1169	GD
	CRE 64-3-2	22	●	V2	37.7	DN 200	1446	1460	242	2526	810	1390	421	631	300	1276	GD
6	CRE 64-1-1	7.5	●	V2	13.6	DN 200	1012	1460	202	3026	600	1390	421	631	210	971	GD
	CRE 64-1	11	●	V2	19.6	DN 200	1179	1460	242	3026	810	1390	421	631	210	1147	GD
	CRE 64-2-2	15	●	V2	25.8	DN 200	1338	1460	242	3026	810	1390	421	631	300	1346	GD
	CRE 64-2-1	18.5	●	V2	32	DN 200	1338	1460	242	3026	810	1390	421	631	300	1382	GD
	CRE 64-3-2	22	●	V2	37.7	DN 200	1446	1460	242	3026	1050	1390	421	631	300	1599	GD

Legend

- ● Three-phase motors

Explanation

- Motor power is the power per pump.
- Rated current: Additional current applies for the control circuit depending on design.
- Voltage code, V2: 3 × 400 V ± 5 %, 50 Hz, PE.
- Design GD: The pumps and the control panel are mounted on their own base frames. The base frames are separated. The control panel can be placed up to 3 meters from the pumps.
- Dimensions may vary by ± 10 mm.

Hydro MPC-EC with CR 64

Curve charts

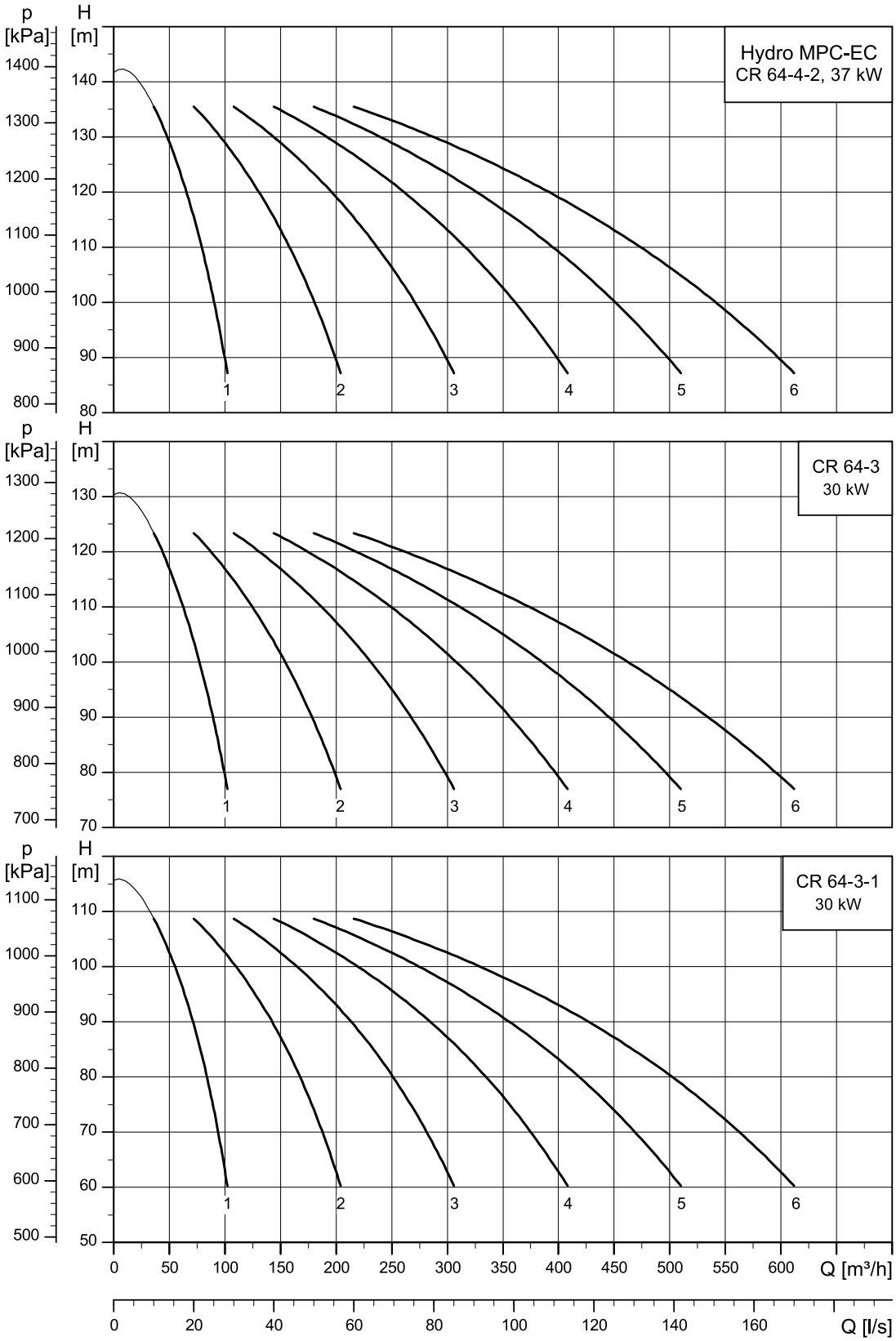

Losses in fittings and valves are not included.

Dimensional sketch

Below is the dimensional sketch of a system in different designs. The system is shown as an example. The pumps supplied may differ from the sketch.

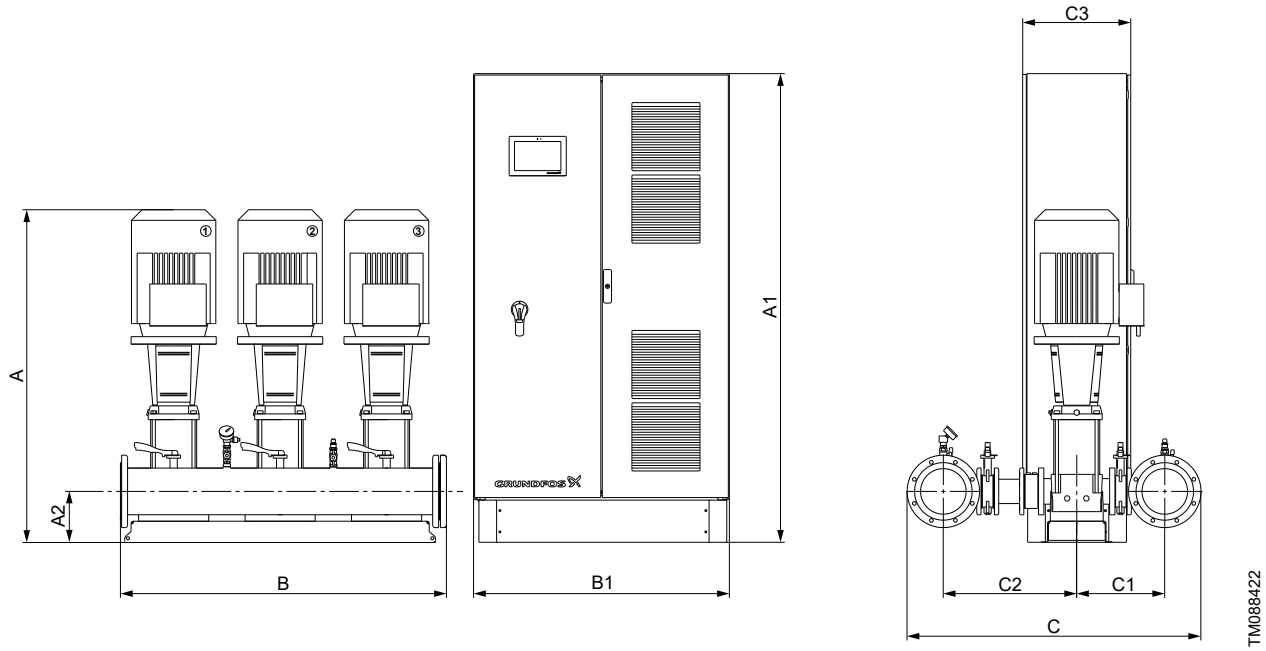

Design GC

Electrical data, dimensions and weights

Number of pumps	Pump type	Motor power [kW]	Motor type	Voltage code	Rated current [A]	Connections	A [mm]	A1 [mm]	A2 [mm]	B [mm]	B1 [mm]	C [mm]	C1 [mm]	C2 [mm]	C3 [mm]	Net weight [kg]	Design
2	CR 64-3-1	30	●	V2	110.8	DN 150	1549	1900	242	1024	1000	1335	421	631	400	1018	GC
	CR 64-3	30	●	V2	110.8	DN 150	1549	1900	242	1024	1000	1335	421	631	400	1018	GC
	CR 64-4-2	37	●	V2	132.8	DN 150	1657	1900	242	1024	1200	1335	421	631	400	1137	GC
3	CR 64-3-1	30	●	V2	165.8	DN 200	1549	1900	242	1526	1200	1390	421	631	400	1477	GC
	CR 64-3	30	●	V2	165.8	DN 200	1549	1900	242	1526	1200	1390	421	631	400	1477	GC
	CR 64-4-2	37	●	V2	198.8	DN 200	1657	1900	242	1526	1600	1390	421	631	400	1737	GC
4	CR 64-3-1	30	●	V2	221.2	DN 200	1549	1900	242	2026	2000	1390	421	631	400	2032	GC
	CR 64-3	30	●	V2	221.2	DN 200	1549	1900	242	2026	2000	1390	421	631	400	2032	GC
	CR 64-4-2	37	●	V2	265.2	DN 200	1657	1900	242	2026	2000	1390	421	631	400	2162	GC
5	CR 64-3-1	30	●	V2	276.2	DN 200	1549	1900	242	2526	2400	1390	421	631	400	2444	GC
	CR 64-3	30	●	V2	276.2	DN 200	1549	1900	242	2526	2400	1390	421	631	400	2444	GC
	CR 64-4-2	37	●	V2	331.2	DN 200	1657	1900	242	2526	2400	1390	421	631	400	2605	GC
6	CR 64-3-1	30	●	V2	331.7	DN 200	1549	1900	242	3026	2400	1390	421	631	400	2830	GC
	CR 64-3	30	●	V2	331.7	DN 200	1549	1900	242	3026	2400	1390	421	631	400	2830	GC
	CR 64-4-2	37	●	V2	397.7	DN 200	1657	1900	242	3026	2400	1390	421	631	400	3050	GC

Legend

- ● Three-phase motors

Explanation

- Motor power is the power per pump.
- Rated current: Additional current applies for the control circuit depending on design.
- Voltage code, V2: 3 × 400 V ± 5 %, 50 Hz, PE.
- Design GC: The pumps and the control panel are mounted on their own base frames. The base frames are separated. The control panel can be placed up to 3 meters from the pumps.
- Dimensions may vary by ± 10 mm.

5. Document quality feedback

To provide feedback about this document, use your smart device to scan the QR code.

FEEDBACK93445709

Click here to submit your feedback

Trademarks displayed in this material, including but not limited to Grundfos and the Grundfos logo, are registered trademarks owned by The Grundfos Group. © 2025 Grundfos Holding A/S, all rights reserved.

93445709 **09.2025**
ECM: 1430064

GRUNDFOS Holding A/S
Poul Due Jensens Vej 7
DK-8850 Bjerringbro
Tel: +45 87 50 14 00
www.grundfos.com

GRUNDFOS