Hydro MPC

Hydro MPC systems with 2 to 6 pumps and GENIECON PANEL

GRUNDFOS

Table of contents

1. System introduction 3
System description 3
Applications 3
Features and benefits 3

2. System data 5
Performance range 5
Product range. 7
Control variants 8
Type key 9
System design 10
Sound pressure level. 10

3. Construction. 11
Pump 11
Motor 11
Shaft seal 12
Base frame 12
Manifold 12
Flange. 12
Control panel 13
Control unit 13
IO 241 13
IO 243 13

4. Control functions 14
Operating panel, GENIECON UNIT 14
Control mode 14
Overview of functions 14

5. Installation 16
Mechanical installation. 16
Electrical installation 17
Hygiene 17

6. Sizing 18
Maximum flow requirement 19
Required outlet pressure 19
System layout. 20
Consumption profile and load profile 20
Inlet pressure 21
System selection. 21
Accessories 21
Example: How to select a system 23

7. Curve conditions 24
Understanding the performance curve 24
How to read the performance curve. 25

8. Performance curves and technical data. . . 26
Hydro MPC-E with CRIE 3 26
Hydro MPC-E with CRIE 5 29
Hydro MPC-E with CRIE 10 32
Hydro MPC-E with CRIE 15 35
Hydro MPC-E with CRIE 20 38
Hydro MPC-E with CRE 32 41
Hydro MPC-E with CRE 45 44
Hydro MPC-E with CRE 64 48
Hydro MPC-EC with CR 64 51
Hydro MPC-E with CRE 95 53
Hydro MPC-EC with CR 95 56
Hydro MPC-E with CRE 125. 58
Hydro MPC-EC with CR 125 61
Hydro MPC-E with CRE 155. 63
Hydro MPC-EC with CR 155 65
Hydro MPC-EC with CR 185 68
Hydro MPC-EC with CR 215 72
Hydro MPC-EC with CR 255 76

9. Optional equipment 80
Redundant inlet-pressure sensor 82
Repair switch 82
Redundant outlet-pressure sensor 82

10. Accessories 83
Diaphragm tank 83
Adjustable vibration damper 83

11. Product manuals 84

12. Hydro Booster family systems 85

13. App for downloading 86

14. Grundfos Product Center 87

15. Document quality feedback. 88

1. System introduction

System description

As standard, the system consists of two to six CR, CRI, CRE or CRIE pumps. The pumps are connected in parallel and mounted on a common base frame with a control panel and all the necessary fittings, such as manifolds, non-return valves, isolating valves, pressure transmitters, pressure gauge, etc. CRN or CRNE pumps can be offered with the system on request.

A pilot pump can be added in the system with high variation in flow demand to maintain high efficiency at low flow.

The pumps of the system can be removed without interfering with the pipes on either side of the manifolds.

Different control variants are available for the system. See the section on control variants.

The system is preconfigured and tested from factory.

Hydro MPC-E

- The system consists of two to six identical electronically speed-controlled CRE or CRIE pumps.
- Each pump has an integrated frequency converter.
- The motor power is from 0.37 to 22 kW.
- The pipe connection is from R 2 to DN 400.

Hydro MPC-EC

- The system consists of two to six identical CR or CRI pumps.
- Each pump is connected to a Grundfos CUE frequency converter in the control panel.
- The motor power starts from 30 kW.
- The pipe connection is from DN 150 to DN 500.

Related information

Control variants

Applications

The system is designed for the transfer and pressure boosting of clean water in places such as:

- water-supply systems
- irrigation systems
- industrial applications
- commercial buildings
- high-rise buildings.

Features and benefits

Perfect constant-pressure control

TM089241

GENIECON UNIT

The pumps of the systems are controlled individually by GENIECON UNIT. This multi-pump control unit contains application-optimized software and pump curve data. GENIECON UNIT knows the exact hydraulic and electrical data of the pumps to be controlled. A log function monitors the system performance over a period of time.

User-friendliness

The system features a built-in setup guide in a wide range of languages. The wizard guides the installer through a series of steps until the system is correctly installed and commissioned.

When the installation is complete, the large, user-friendly touch display ensures a visual status overview of the system and easy operation.

Reliability

TM087118

Grundfos CRE pumps

The system is built on the Grundfos CR, CRI, CRE and CRIE pump range. These pumps are known for their reliability, efficiency and adaptability.

Every vital piece of the system is made by Grundfos. You are guaranteed long-lasting technology that requires minimal maintenance and provides maximum efficiency.

Low energy consumption

The Hydro MPC-E systems, equipped with Grundfos MGE motors ranging from 0.37 to 22 kW, achieve a total efficiency that surpasses the Super Premium Efficiency EuP IE5 level as per IEC 60034-30-1.

TM088308

Grundfos MGE motors

50 Hz MG motors from 0.37 to 18.5 kW and Innomotics motors from 22 to 200 kW meet the legislative requirements of the EuP IE4 level.

60 Hz MG motors from 0.37 to 22 kW and Innomotics motors from 30 to 55 kW meet the legislative requirements of the EuP IE3 level.

60 Hz Innomotics motors from 75 to 200 kW meet the legislative requirements of the EuP IE4 level.

Furthermore, the system uses pump curve data to calculate and optimize the cut-in and cut-out of pumps.

High-efficient motors, advanced control in combination with optimized hydraulics for both the pumps and the manifolds ensure minimal energy consumption.

Flexibility

The elements of the system can be combined in a number of ways to make the perfect solution for you.

Custom-built solutions

If this data booklet does not provide you with a solution that meets your specific pumping needs, contact Grundfos.

2. System data

Performance range

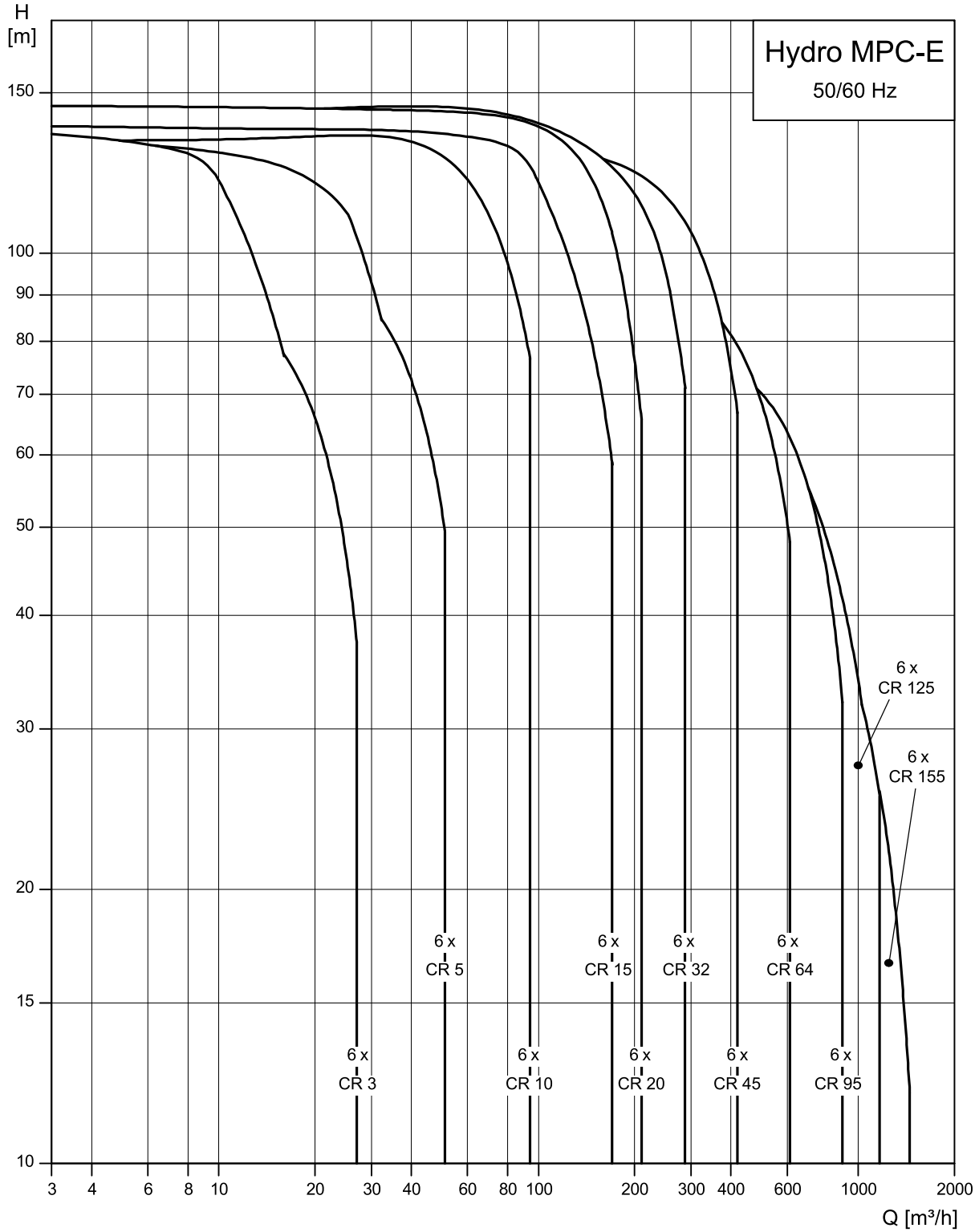

Hydro MPC-E

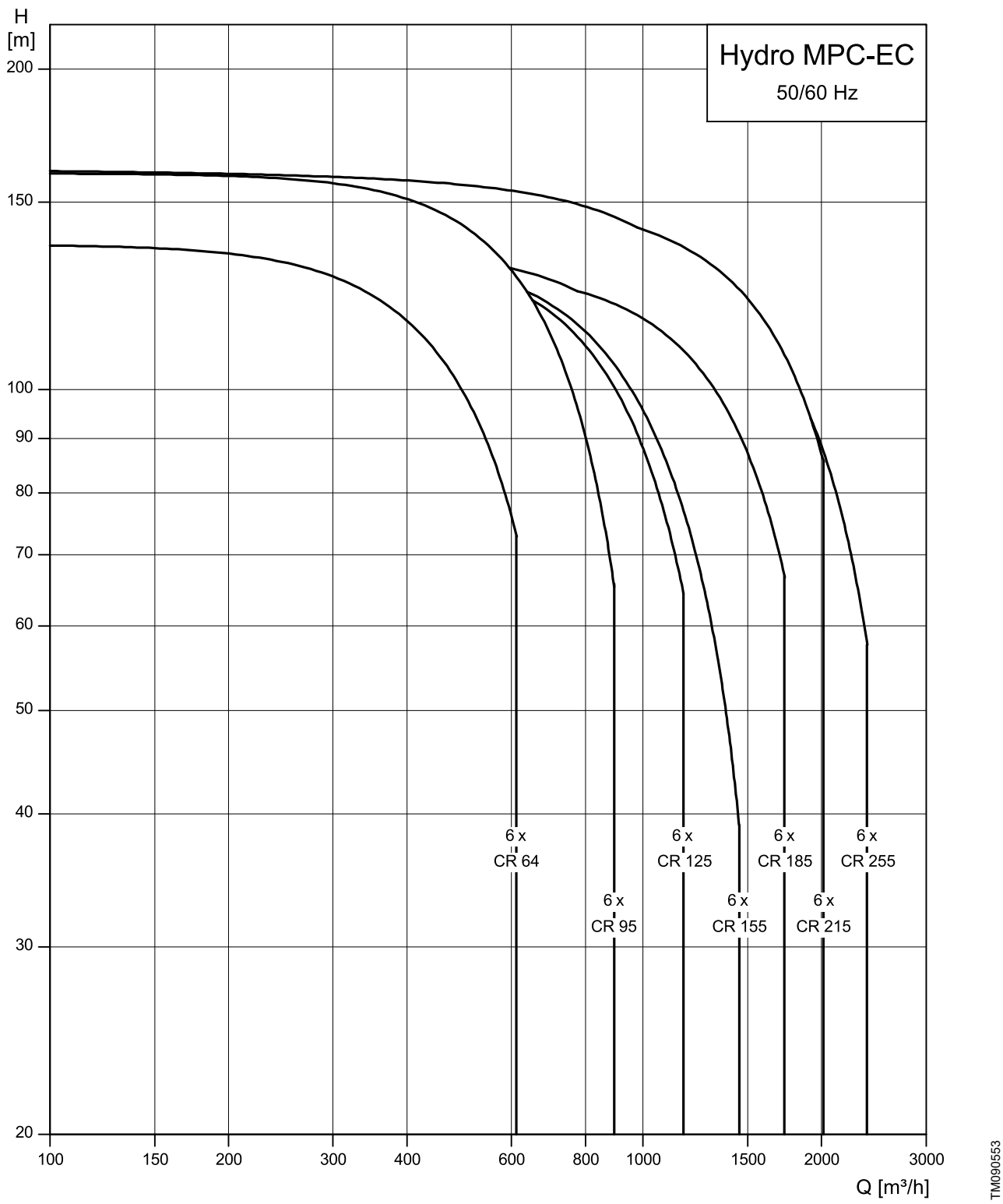
H
[m]
Hydro MPC-EC
50/60 Hz
200
150
100
90
80
70
60
50
40
30
20
6 x
CR 64
6 x
CR 95
6 x
CR 125
6 x
CR 155
6 x
CR 185
6 x
CR 215
6 x
CR 255
100
150
200
300
400
600
800
1000
1500
2000
3000
Q [m³/h]
TM090553

Hydro MPC-EC

Product range

System type	Hydro MPC-E	Hydro MPC-EC
Frequency	50/60 Hz	50/60 Hz
Number of pumps	2-6	2-6
Hydraulic data		
Maximum head [m]	50 Hz: 146 60 Hz: 155	50 Hz: 146 60 Hz: 155
Rated flow rate [m^3/h]	0-1836	0-1836
Liquid temperature [°C]	5-60 [1)]	5-60 [1)]
Ambient temperature [°C]	0-40	0-40
Relative humidity	90 %	90 %
Max. operating pressure [bar]	16 [2)]	16 [2)]
Motor data		
Motor power [kW]	0.37 - 22	30-110
Shaft seal	HQQE (SiC/SiC/EPDM)	HQQE (SiC/SiC/EPDM)
Pipe connection		
Union connection	R 2 - R 2 1/2	-
DIN flange	DN 80 - DN 400	DN 150 - DN 500

1) Systems for lower and higher temperature are available on request.

2) Systems with maximum operating pressure higher than 16 bar are available on request.

Legend

- - Not applicable

Control variants

The table below shows examples of two system groups.

Hydro MPC-E	Hydro MPC-EC
System with three CRE or CRIE pumps.	System with three CR or CRI pumps with CUEs.
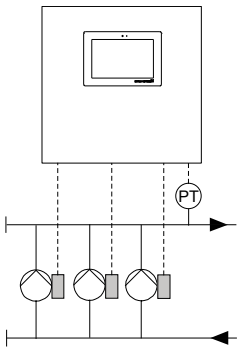 TM087091	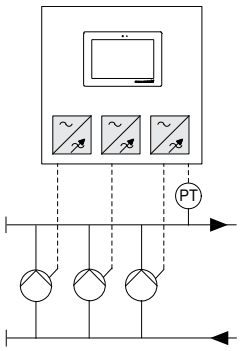 TM087092
One CRE or CRIE pump in operation.	One CR or CRI pump in operation.
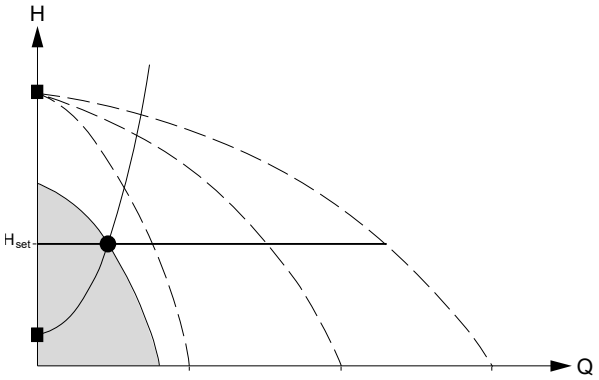 TM088317	
Three CRE or CRIE pumps in operation.	Three CR or CRI pumps in operation.
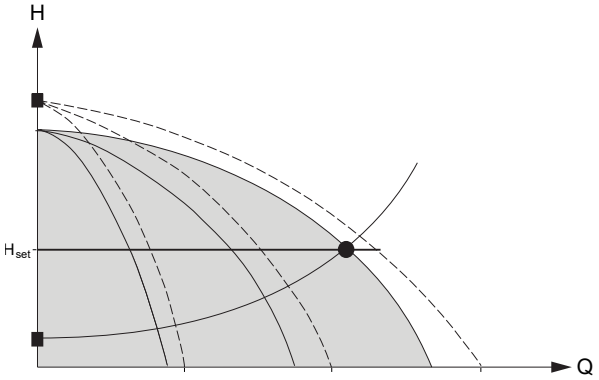 TM088318	

- The system keeps a constant pressure through continuous adjustment of the pump speed.
- The system performance is adjusted to the demand by cutting in/out the required number of pumps and parallel control of the pumps in operation.
- Pump changeover is automatic depending on loads, operating hours and faults.
- All pumps in operation run at an equal speed.

Type key

Example: Hydro MPC-E 6 CRE155-1-1 V1 GD-A-D-ABC

Code	Explanation		Designation
Hydro MPC			System name
E	E: All pumps with E motors [3)] X: Customized system type	EC: All main pumps are fixed speed pumps with CUEs [4)]	System type
6			Number of main pumps
CRE155-1-1			Pump type
V1	V1: 3 × 400 V, 50 Hz, N, PE V2: 3 × 400 V, 50 Hz, PE V3: 3 × 380 V, 50 Hz, N, PE V4: 3 × 380 V, 50 Hz, PE V5: 3 × 400 V, 60 Hz, N, PE V6: 3 × 400 V, 60 Hz, PE V7: 3 × 380 V, 60 Hz, N, PE V8: 3 × 380 V, 60 Hz, PE V9: 3 × 440 V, 60 Hz, N, PE VA: 3 × 440 V, 60 Hz, PE VB: 3 × 220 V, 60 Hz, N, PE VC: 3 × 220 V, 60 Hz, PE VD: 1 × 208 V, 60 Hz, PE	VE: 3 × 208 V, 60 Hz, PE VF: 3 × 230 V, 60 Hz, PE VG: 3 × 460 V, 60 Hz, N, PE VH: 3 × 460 V, 60 Hz, PE VJ: 3 × 575 V, 60 Hz, PE VK: 3 × 415 V, 50 Hz, N, PE VL: 3 × 415 V, 50 Hz, PE VM: 1 × 240 V, 50 Hz, N, PE VN: 1 × 230 V, 50 Hz, N, PE VQ: 1 × 230 V, 60 Hz, PE VR: 3 × 200 V, 50 Hz, PE VS: 3 × 200 V, 60 Hz, PE VX: Customized variant (special voltage rating)	Voltage code
GD	GA: Systems with GENIECON PANEL mounted on the same base frame as the pumps. GC: Systems with GENIECON PANEL mounted on its own base for floor mounting. The panel can be placed up to 3 meters from the pumps. GD: Systems with GENIECON PANEL mounted on its own base frame. The panel can be placed up to 3 meters from the pumps. GW: Systems with GENIECON PANEL prepared for wall mounting. The panel can be placed from 3 meters and up. GX: Systems with GENIECON PANEL, customized mounting.		Design
A	A: E B: DOL C: SD		Starting method
D	A: Stainless steel manifold and base frame(s), with standard valves B: Stainless steel manifold, base frame(s) and valves C: Galvanized steel manifold and base frame(s), with standard valves D: Stainless steel manifold, galvanized steel base frame(s), with standard valves G: Galvanized steel manifold, galvanized steel base frame and local valves H: Galvanized steel manifold, black painted base frame(s), with standard valves I: Stainless steel manifold, black painted base frame(s), with standard valves J: Black coated mild steel manifold and base frame(s), with standard valves P: Stainless steel manifold, galvanized steel base frame and local valves X: Customized material combination		Material combination
ABC	A: Standard hydraulic B: Pilot pump C: Bypass D: Non-return valve on inlet E: Elbow manifold F: No inlet manifold G: Diaphragm tank H: Redundant inlet-pressure sensor I: Repair switch J: Redundant outlet-pressure sensor K: 1 free pump position L: 2 free pump position M: 3 free pump position	N: PN 10 pressure rating O: PN 25 pressure rating P: Low prepressure (NPSH) Q: PN 40 pressure rating R: Non standard RPM S: Customized variant T: Certificate U: Undersized motor V: Standard controls with options W: Customized controls X: More than three options Y: Control panel with double door	Option

3) Integrated frequency converter, one per pump.

4) Grundfos CUE frequency converter, one per pump.

System design

The system has different designs according to number of pumps and location of the control panel.

Design	Description	Examples
Design GA	The pumps and the control panel are mounted on the same base frame.	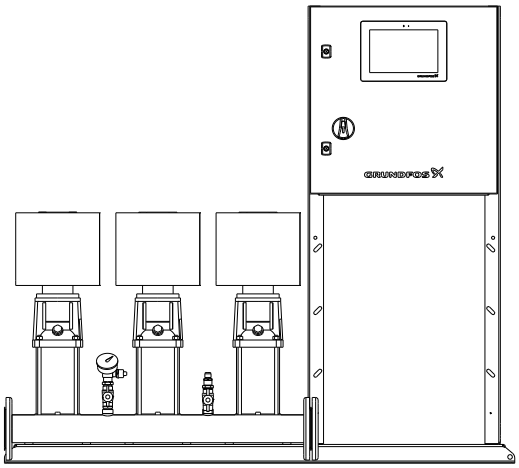 TM087095
Design GC	The pumps and the control panel are mounted on their own base frames. The base frames are separated. The control panel is for floor mounting and can be placed up to 3 meters from the pumps.	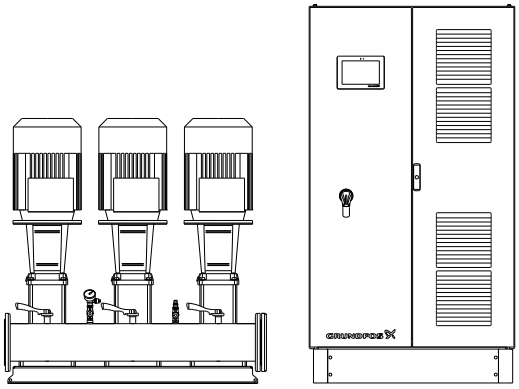 TM087096
Design GD	The pumps and the control panel are mounted on their own base frames. The base frames are separated. The control panel can be placed up to 3 meters from the pumps.	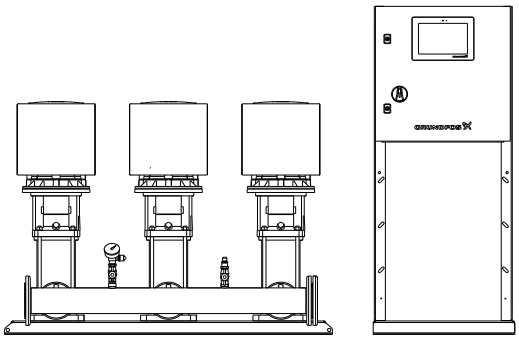 TM087097

Sound pressure level

The sound pressure depends on the specific pump type and motor size. You can find the sound pressure level in the installation and operating instructions of the pump.

In systems with multiple pumps, the maximum total sound pressure $L_{p,tot}$ increases proportionally with the total number of pumps. You can calculate the value using the equation stated below.

Multiple sound sources may generally be added as[5)]

$$L_{p,\,tot} = 10 Log_{10} \sum_{i} 10^{\frac{L_{p,\,i}}{10}}$$

This means that for a system with multiple identical pumps N, the total system sound level $L_{p,tot}$ may be calculated by adding the values below to the sound level of the specific pump type.

$$L_{p,\,tot} = L_p + \Delta L_p$$

Number of pumps N	ΔL_p dB(A)
1	0
2	3
3	5
4	6
5	7
6	8

5) Leo Beranek and Istvan L. Ver, *Noise and Vibration Control Engineering*, John Wiley and Sons, 1992

3. Construction

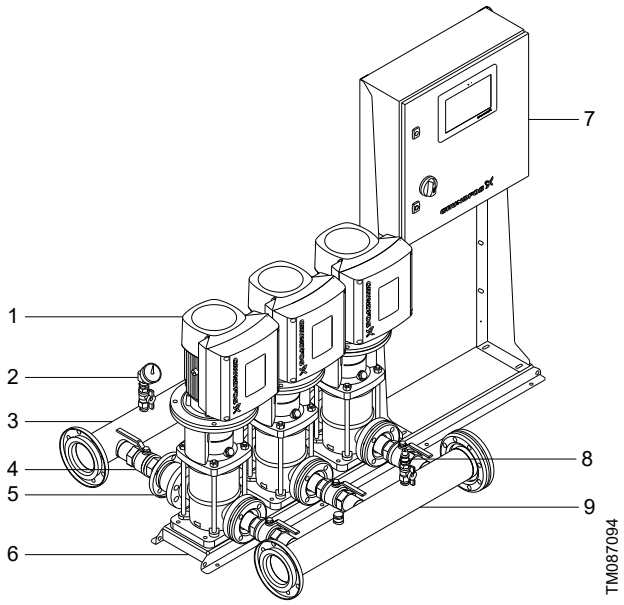

System structure

Pos.	Description	Quantity
1	Pump	2-6
2	Outlet-pressure sensor and pressure gauge	1
3	Outlet manifold	1
4	Isolating valve	2 per pump
5	Non-return valve	1 per pump
6	Base frame	1-2
7	Control panel	1
8	Inlet-pressure sensor	1
9	Inlet manifold	1

System components

The system has a base frame fitted with these components.

Components fitted on the inlet side:

- an inlet manifold
- an inlet-pressure sensor
- one isolating valve per pump.

Components fitted on the outlet side:

- an outlet manifold
- one non-return valve per pump
- one isolating valve per pump
- an outlet-pressure sensor and pressure gauge.

The system is fitted with a control panel to control and monitor the system. Optionally, the system can be fitted with a diaphragm tank on the outlet side.

Pump

CR, CRI and CRN pump

The CR, CRI and CRN pumps are non-self-priming, vertical multistage centrifugal pumps.

The pumps are available with a Grundfos or Innomotics standard motor.

The pump consists of a base and a pump head. Staybolts secure the chamber stack and sleeve between the base and the pump head. The base has inlet and outlet ports on the same level (in line).

The difference among CR, CRI and CRN pumps is the material.

- The CR pumps have a base and a pump head of cast iron and stainless steel (AISI 304 / EN 1.4301).
- The CRI pumps have a base and a pump head of stainless steel (AISI 304 / EN 1.4301).
- The CRN pumps have a base and a pump head of stainless steel (AISI 316 / EN 1.4401).

All pumps are fitted with a maintenance-free mechanical shaft seal of the cartridge type.

All hydraulic parts are made of stainless steel.

For further information, see the installation and operating instructions of the pump.

CRE, CRIE and CRNE pump

The CRE, CRIE and CRNE pumps are built on the basis of CR, CRI and CRN pumps. The CRE, CRIE and CRNE pumps belong to the so-called E-pump family. The difference between the CR and the CRE pump ranges is the motor. The CRE, CRIE and CRNE pump motor is a Grundfos frequency-controlled motor. The motor incorporates a frequency converter.

For further information, see the installation and operating instructions of the pump.

Related information

11. Product manuals

Motor

Grundfos MG and Innomotics motors

The CR, CRI and CRN pumps are fitted with totally enclosed, fan-cooled, 2-pole Grundfos standard motors with principal dimensions to EN standards.

Electrical tolerances are in accordance with EN 60034.

The CR, CRI and CRN pumps are fitted with three-phase MG motors as standard up to 22 kW and Innomotics motors from 30 to 200 kW.

The CR, CRI and CRN pumps from 0.37 to 2.2 kW are also available with single-phase motors (1 × 220-230/240 V).

Motor protection

- Single-phase Grundfos motors have a built-in thermal overload switch (TP 211 according to IEC 34-11).
- Three-phase motors must be connected to a motor-protective circuit breaker according to local regulations.

- Three-phase Grundfos motors as from 3 kW have a built-in thermistor (PTC) according to DIN 44082 (TP 211 according to IEC 34-11).

For further information, see the installation and operating instructions of the pump.

Frequency-controlled MGE motors

The CRE, CRIE and CRNE pumps are fitted with a totally enclosed, fan-cooled, frequency-controlled MGE motor with principal dimensions to EN standards.

The CRE, CRIE and CRNE pumps from 0.37 to 1.5 kW are available with single-phase MGE motors.

The CRE, CRIE and CRNE pumps from 0.37 to 26 kW are available with three-phase MGE motors.

Motor protection

- The MGE motors incorporate thermal protection against slow overload and blocking.
- The CRE, CRIE and CRNE pumps require no external motor protection.

For further information, see the installation and operating instructions of the pump.

Related information

11. Product manuals

Shaft seal

All pumps have a maintenance-free mechanical cartridge type HQQE shaft seal. Seal faces are made of silicon carbide. Rubber parts are made of EPDM.

Other shaft seal variants are available on request.

GR3395H

Cartridge shaft seal

You can replace the shaft seal without dismantling the pump. For pumps with motors above 11 kW, you can replace the shaft seal without removing the motor.

For further information, see the documents in the section on product manuals.

Related information

11. Product manuals

Base frame

The pumps in the system are mounted on a common base frame. The base frame is made of stainless steel. For systems with CR, CRE 95 and above, the pumps are mounted on a corrosion protected steel base frame.

Manifold

The manifolds are made of stainless steel. They are fitted on the inlet and outlet side of the pumps.

In some regions, galvanized or painted manifolds are available as an option. For further information, contact Grundfos.

An isolating valve and a non-return valve are fitted between the outlet manifold and the individual pumps. The non-return valve can be fitted on the inlet side on request.

TM089970

Manifold

Flange

PN 16 flanges, DN 80-500

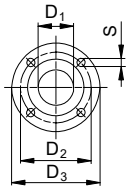

TM027720

	Standard: EN 1092-2 PN 16 (1.6 MPa)										
	Nominal diameter (DN)										
DN	**80**	**100**	**125**	**150**	**200**	**250**	**300**	**350**	**400**	**450**	**500**
D_1	80	100	125	150	200	250	300	350	400	450	500
D_2	160	180	210	240	295	355	410	470	525	585	650
D_3	200	220	250	285	340	405	460	520	580	640	715
S	8 × 19	8 × 19	8 × 19	8 × 23	12 × 23	12 × 28	12 × 28	16 × 28	16 × 28	20 × 30	20 × 33

Control panel

TM089276

GENIECON PANEL

The system is fitted with a Grundfos GENIECON PANEL to control and monitor the system. The control panel consists of a built-in control unit, GENIECON UNIT. The control panel contains all necessary components such as main switch, contactors, IO modules and cables. If necessary, the control panel can be fitted with a fan to remove surplus heat generated by the frequency converter.

The control panel can be mounted on the same base frame as the pumps or on its own base frame. See the section on system design.

Related information

System design

Control unit

TM089241

GENIECON UNIT

GENIECON PANEL consists of a built-in control unit, GENIECON UNIT. The GENIECON multi-pump control unit of the system is located in the door of GENIECON PANEL.

GENIECON UNIT features an operating panel with a touch display and a status LED on the top of the display. The operating panel enables manual setting and change of parameters such as setpoint, start/stop of system or individual pumps. GENIECON UNIT has application-optimized software for adapting the system to the application in question.

IO 241

TM089274

IO 241

IO 241 is an optional module for gaining extra input and output signals. It can be connected to the Grundfos IO 242 pump module and Grundfos control unit CU 241. It also provides digital outputs used for external switch gear.

IO 243

TM089275

IO 243

IO 243 is a module to exchange the digital and analog signals between GENIECON UNIT and other electrical systems via GENIbus. IO 243 can be used with GENIECON UNIT to control one to three pumps, monitor the running conditions of the pumps, and connect to sensors in the pump motors. IO 243 provides analog output, digital input, and analog/digital input signals. It also provides digital outputs used for external switch gear.

4. Control functions

Operating panel, GENIECON UNIT

The operating panel on the front door of the control panel features a touch display and a status LED at the top of the display. The operating panel enables manual setting and monitoring of the system performance.

GENIECON UNIT operating panel

Pos.	Description
1	Menu bar
2	System illustration
3	Focus menu
4	Events bar
5	Status LED
6	Ambient light sensor
7	Time and connectivity bar
8	System overview

For detailed information about setting the system, see the installation and operating instructions, as well as the application and operating instructions of GENIECON PANEL.

Control mode

Constant-pressure control is the default control mode from factory. It ensures that the system delivers constant pressure despite a change in consumption.

When taps are opened, water is drawn from the diaphragm tank, if installed. The pressure drops to a set cut-in pressure, and the first speed-controlled pump starts. The speed of the pump in operation is continuously increased to meet the demand. As the consumption rises, more pumps are cut in until the performance of the pumps in operation corresponds to the demand. During operation, GENIECON UNIT controls the speed of each pump individually according to the pump curve data downloaded into the unit.

Furthermore, GENIECON UNIT regularly estimates whether pumps are to be cut in or out to ensure the best efficiency. When the water consumption decreases, pumps are cut out one by one to maintain the set outlet pressure.

Overview of functions

Functions via the GENIECON UNIT operating panel	Hydro MPC-E	Hydro MPC-EC
Control mode		
Constant pressure	•	•
Proportional pressure	•	•
Constant flow	•	•
Control functions		
Closed loop PID control	•	•
Individual pump control	•	•
Reduced operation (in case of emergency power run)	•	•
Cascade Control functions		
POPS cut-in / cut-out	•	•
Calculated speed (auto)	•	•
Cut-in / cut-out - user defined speed	•	•
Maximum starts per hour	•	•
Standby pump (duty operation)	•	•
Pump alternation	•	•
Pump test run	•	•
Pump stop attempt	•	•
Pilot pump	•	•
Alternative setpoints	•	•
External setpoint influence	•	•
Custom functions		
Naming of IO	•	•
Sensor function		
Redundant sensor	•	•
Multi sensor	•	•
Optimizing features		
Pump data	•	•
Clock program	•	•
Flow estimation	•	•
Fixed inlet pressure	•	•
System flow	•	•
Accumulated volume	•	•
Low flow stop	•	•
Stop at minimum speed	•	•
User defined duty	•	•
Pump alternation	•	•
System protection		
Dry-running protection	•	•
Pressure monitoring min. / max.	•	•
Limit exceeded	•	•
Non-return valve (NRV) fault detection	•	-
Fault detection - sensor, pump, external	•	•
Soft pressure build up	•	•
Setpoint ramp	•	•
Emergency run	•	•
Measured values		
Configured analog sensors	•	•
Setpoint user selected	•	•

Functions via the GENIECON UNIT operating panel	Hydro MPC-E	Hydro MPC-EC
Setpoint actual	●	●
System power consumption	●	●
Series 2000 flow rate	●	●
System flow rate	●	●
Specific energy actual	●	●
Specific energy average	●	●
Total pumped volume	●	●
Speed pump 1-6	●	●
Speed pilot pump	●	●
Power pump 1-6	●	●
Energy consumption for pump 1-6	●	●
Energy consumption for pilot pump	●	●
Operation hours 1-6	●	●
Operation hours pilot pump	●	●
Alerts		
Actual alarms or warnings	●	●
Reset of alarms or warnings	●	●
Alarm or warning log	●	●
Tamper protection + warning	●	●
Remote control	●	●
Grundfos GO	●	●
Grundfos GO Link	●	●
GiC/cloud support	●	●
Homescreen 2.0		
System illustration	●	●
System overview + operation mode menus	●	●
Warning, alarm, info events	●	●
Level 2 cards (pump & sensors)	●	●
Screen saver	●	●
Status LED	●	●
Other		
Service contact info	●	●
Commissioning flow	●	●
Firmware update remote (controller online)	●	●
Firmware update USB (controller offline)	●	●
Backup to USB	●	●
Backup GO Link	●	●
Backup GO	●	●
Event logging	●	●
Password protection	●	●
Cyber security	●	●
Multi-language selection	●	●
Inputs / outputs		
Digital inputs	●	●
Digital outputs	●	●
ADI configurable inputs	●	●
Analog input via BUS	●	●
Analog outputs, only if IO module	●	●
Relay outputs	●	●
Support for extension input/output IO 241	●	●
Connectivity		
WIFI	●	●
Ethernet	●	●
BLE	●	●

Functions via the GENIECON UNIT operating panel	Hydro MPC-E	Hydro MPC-EC
USB-A for firmware update, backup and restore settings	●	●
USB-C service port	●	●
Communication / integration BMS/ SCADA via Grundfos CIM or CIU modules		
BACnet MS/TP (CIM)	❍	❍
BACnet IP (CIM)	❍	❍
PROFINET I/O (CIM)	❍	❍
Ethernet/IP (CIM)	❍	❍
PROFIBUS DP (CIM)	❍	❍
Modbus TCP (CIM)	❍	❍
Modbus RTU (CIM)	❍	❍
LON (CIM)	❍	❍
GSM/GPRS 3G 4G EU (CIM) - SMS based	❍	❍
GSM/GPRS 3G 4G EU (CIM) - Data (GiC) based	❍	❍
MA GiC LPWAN (CIM), GiC LTE-M, 4G with fallback to 2G (GiC)	❍	❍
GENIbus external, Grundfos protocol	❍	❍
Modbus TCP (Soft-CIM) [6]	❍	❍
Modbus RTU (Soft-CIM) [6]	❍	❍
System type		
MPC-E system	●	-
MPC-EC system	-	●
Application specific overview		
Pressure boosting - CBS	●	●
Pressure boosting - WU	●	●

[6] Require licensing.

● Standard.
❍ On request.
- Not available.

For detailed information about the functions, see the application and operating instructions of GENIECON PANEL.

5. Installation

Mechanical installation

Location

The system is designed only for indoor installation and must not be exposed to direct sunlight.

- Install the system in a well-ventilated room to ensure sufficient cooling of the control panel and pumps.
- Install the system with a one-meter clearance on all sides for easy inspection and removal.

The system must only be connected to protected network subnets with strict access control.

The system must be installed in a location with access control to prevent unauthorized access to the system.

Foundation

Position the system on an even and solid surface, such as a concrete floor or foundation. If the system does not have vibration dampers, secure it to the floor or foundation with bolts.

The weight of a concrete foundation must be at least 1.5 times the weight of the system.

Pipework

Arrows on the pump base show the direction of the water flow through the pump.

The pipes connected to the system must be of adequate size. Fit expansion joints in the inlet and outlet pipes to avoid resonance.

1. Connect the pipes to the manifolds of the system.
   Either end can be used. Apply sealing compound to the unused end of the manifold, and fit the screw cap. For manifolds with flanges, fit a blanking flange with a gasket.
2. Fasten all screws and bolts before starting the pump.
   If systems are installed in blocks of flats or the first consumer on the line is close to the system, we recommend that you fit expansion joints on the inlet and outlet pipes to prevent vibration from being transmitted through the pipes.
3. Fasten the pipes to parts of the building to ensure that the pipes cannot move or be twisted.

To optimize operation and minimize noise and vibration, consider vibration dampening of the system.

Noise and vibration are generated by motor and pump rotations, and by the flow in pipes and fittings. The effect on the environment is subjective and depends on correct installation and the condition of the other parts of the system.

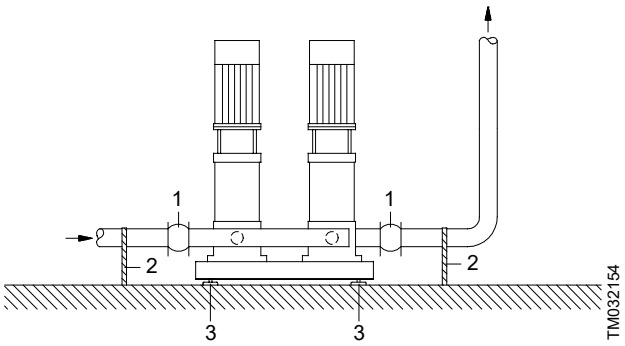

Installation example with expansion joints, pipe supports and vibration dampers

Pos.	Description
1	Expansion joint
2	Pipe support (and recommended location for isolating valve)
3	Vibration damper

The expansion joints, pipe supports and vibration dampers shown in the figure above are not included in the standard system.

Vibration dampers

To prevent the transmission of vibration to buildings, we recommend that you use the vibration dampers to isolate the system foundation from the building parts.

The appropriate damper varies depending on the installation situation. An inappropriate damper may cause an increased vibration level. Therefore, vibration dampers must be sized by the supplier. If the system is installed on a base frame with vibration dampers, always install expansion joints on the manifolds. This is important to prevent the system from "hanging" on the pipes.

Expansion joints

Fit expansion joints for these reasons:

- to absorb expansions or contractions in the pipes caused by changing liquid temperature
- to reduce mechanical strains in connection with pressure surges in the pipes
- to isolate mechanical structure-borne noise in the pipes (only rubber bellows expansion joints).

You must not install the expansion joints to compensate for inaccuracies in the pipes such as center displacement of flanges.

Fit expansion joints at a distance of at least 1 to 1.5 times the nominal flange diameter from the manifold both on the inlet and on the outlet sides. This prevents the development of turbulence in the expansion joints, resulting in better inlet conditions and a minimum pressure loss on the pressure side.

TM024981

Examples of rubber bellows expansion joints without limiting rods

TM024979

Examples of rubber bellows expansion joints with limiting rods

Expansion joints with limiting rods can minimize the forces caused by the expansion joints.

We always recommend that you use expansion joints with limiting rods for flanges larger than DN 100.

Anchor the pipes so that they do not stress the expansion joints, manifolds and the pump. Follow the supplier's instructions and pass them on to advisers or pipe installers.

Electrical installation

The electrical installation must be carried out by authorized persons in accordance with local regulations.

- The electrical installation of the system must be carried out in accordance with enclosure class IP54.
- Check that the supply voltage and frequency correspond to the values stated on the nameplate. Contact Grundfos if you have special voltage requirements.
- Make sure that the conductor cross-section meets the specifications in the wiring diagram.
- The mains connection must be carried out as shown in the wiring diagram.

Hygiene

Grundfos systems are functionally tested and may therefore contain small amounts of residual water. Contaminated drinking water can endanger health, so before using the system, it must be rinsed or flushed thoroughly. This also applies if the system is not used for a longer period.

Rinsing and flushing must always be done in accordance with local regulations and practices.

6. Sizing

When sizing a system, take the following into account:

- The performance of the system must meet the highest possible demand in terms of both flow rate and pressure.
- The system must not be oversized. This is important in relation to installation and operating costs.

You can size the systems via Grundfos Product Center or this data booklet.

Sizing in Grundfos Product Center (recommended)

We recommend that you size your system in Grundfos Product Center, which is a selection program offered by Grundfos. For further information, see the section on Grundfos Product Center.

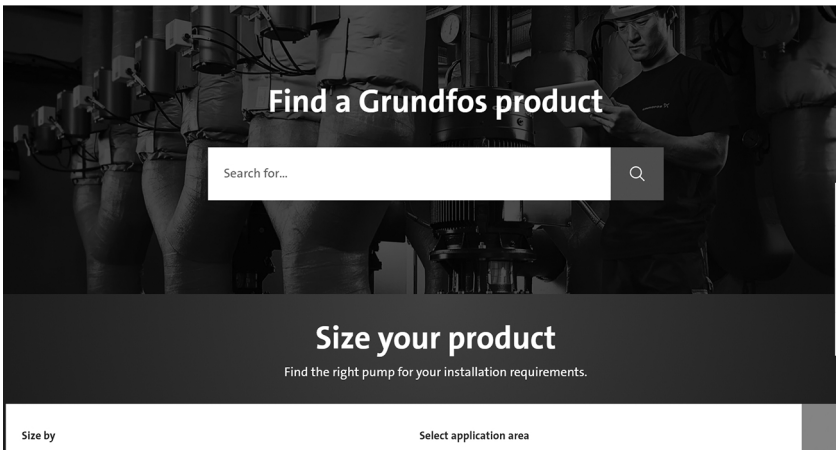

TM083490

Sizing in Grundfos Product Center

Sizing via this data booklet

There are seven steps:

1. maximum flow requirement
2. required outlet pressure
3. system layout
4. consumption profile and load profile
5. inlet pressure
6. system selection
7. accessories.

Maximum flow requirement

The total consumption and the required maximum flow rate depend on the specific application. The maximum flow requirement can be calculated by means of the table below which is based on statistical data.

Consumer	Unit	Q_{year}	Consumption period	Q_{day}	fd [7]	$Q(m)_{day}$	ft [8]	Maximum flow rate
		[m^3/year]	[days/year]	[m^3/day]		[m^3/day]		[m^3/h]
Residence building	Residence (2.5 persons)	183	365	0.5	1.3	0.65	1.7	0.046
Office building	Employee	25	250	0.1	1.2	0.12	3.6	0.018
Shopping centre	Employee	25	300	0.08	1.2	0.1	4.3	0.018
Supermarket	Employee	80	300	0.27	1.5	0.4	3.0	0.05
Hotel	Bed	180	365	0.5	1.5	0.75	4.0	0.125
Hospital	Bed	300	365	0.8	1.2	1.0	3.0	0.12
School	Pupil	8	200	0.04	1.3	0.065	2.5	0.007

7) Maximum consumption factor, day

8) Maximum consumption factor, hour

Example: Hotel with 540 beds

Number of beds:	n
Total annual consumption:	$Q_{year} \times n$
Consumption period:	d
Average consumption per day:	$(Q_{year} \times n) / d$
Maximum consumption per day:	$Q_{(m)day} = f_d \times Q_{day}$
Maximum flow requirement per hour:	Q_{max} = maximum flow rate/hour × number of beds

Calculation

n	=	540 beds
$Q_{year} \times n$	=	180 × 540 = 97,200 m^3/year
d	=	365 days/year
$(Q_{year} \times n)/d$	=	97,200/365 = 266.3 m^3/day
$Q(m)_{day}$	=	$f_d \times Q_{day}$ = 1.5 × 266.3 = 399.4 m^3/day
Q_{max}	=	Maximum flow rate/hour x number of beds = 0.125 × 540 = 67.5 m^3/h

Required outlet pressure

The required outlet pressure of the system can be calculated with the following equation:

p_{set}	=	$p_{tap(min)} + p_f + (h_{max}/10.2)$
p_{boost}	=	$p_{set} - p_{in(min)}$

Key

p_{set}	=	Required outlet pressure
$p_{tap(min)}$	=	Required minimum pressure at the highest tapping point
p_f	=	Total pipe friction loss
h_{max}	=	Height from system outlet port to highest tapping point
$p_{in(min)}$	=	Minimum inlet pressure
p_{boost}	=	Required boost

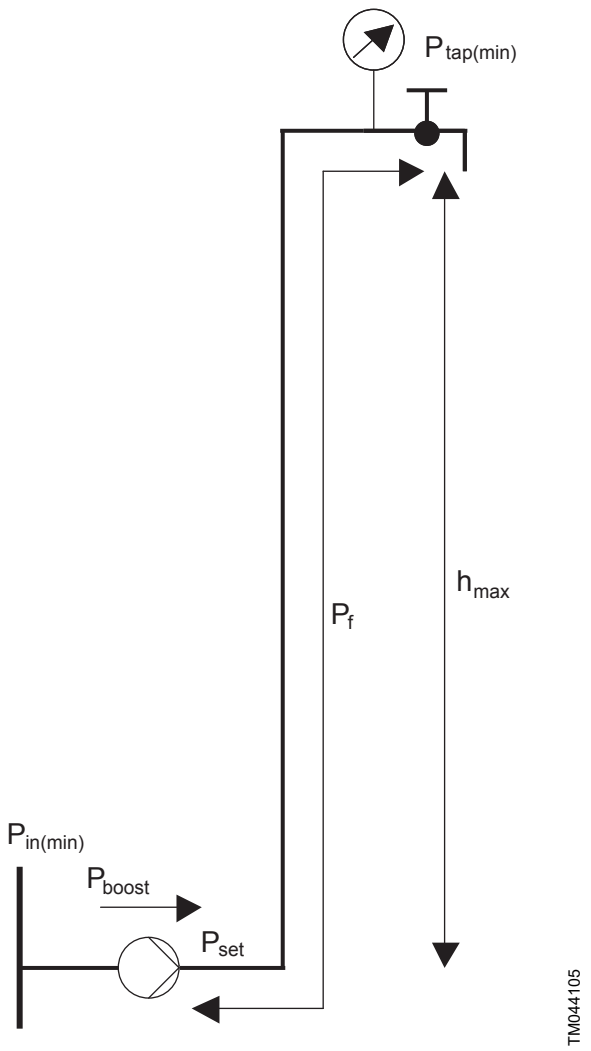

Calculation of required outlet pressure

Example calculation

$p_{tap(min)}$	=	2 bar
p_f	=	1.2 bar
h_{max}	=	41.5 m
$p_{in(min)}$	=	2 bar
p_{set}	=	2 + 1.2 + (41.5/10.2) = 7.3 bar
p_{boost}	=	7.3 - 2 = 5.3 bar

System layout

- Direct boosting

Example: The system is connected to water mains designed to distribute water from one place to another.

- Break tank

Example: The system is connected to a break tank installed before the system.

- Pressure boosting in zones

Example: A high-rise building or a hilly landscape where the water supply system is divided into zones.

- Roof tank

Example: The system distributes water to a roof tank on top of a high-rise building.

Consumption profile and load profile

The consumption pattern of the installation can be illustrated as a 24-hour consumption profile and a load profile.

24-hour consumption profile

The 24-hour consumption profile is the relation between the time of the day and the flow rate.

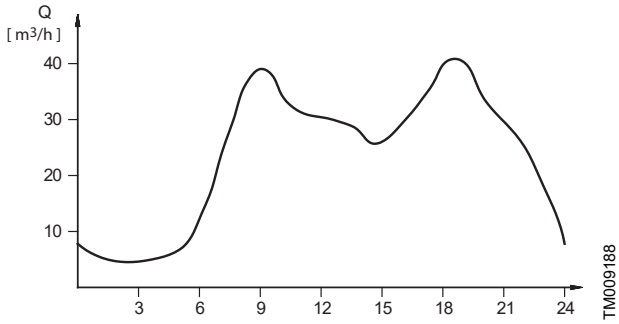

Example of a 24-hour consumption profile

If the consumption is variable and optimum comfort is required, use pumps with continuously variable speed.

Load profile

You can make the load profile when the 24-hour consumption profile is determined.

The load profile shows the percentage of the flow rate at which the system operates per day.

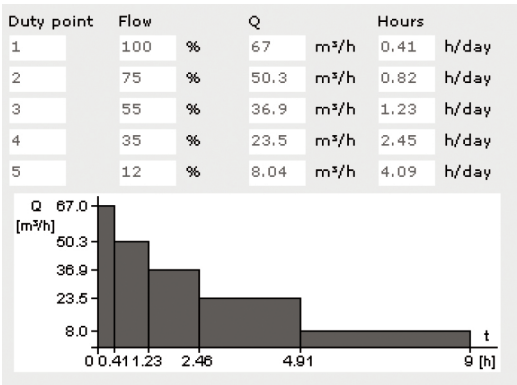

Duty point	Flow		Q		Hours	
1	100	%	67	m³/h	0.41	h/day
2	75	%	50.3	m³/h	0.82	h/day
3	55	%	36.9	m³/h	1.23	h/day
4	35	%	23.5	m³/h	2.45	h/day
5	12	%	8.04	m³/h	4.09	h/day

Load profile

Examples of typical 24-hour consumption profiles and their load profiles:

	Water supply	Industry	Irrigation
24-hour profile	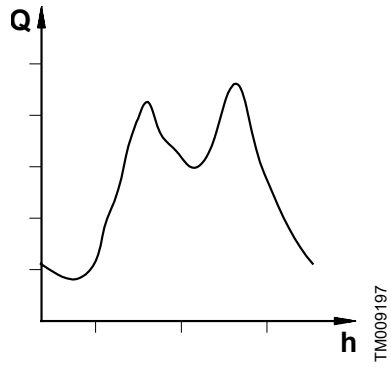	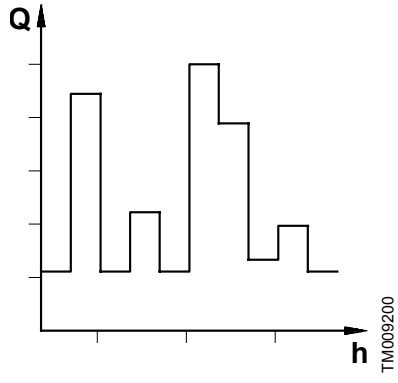	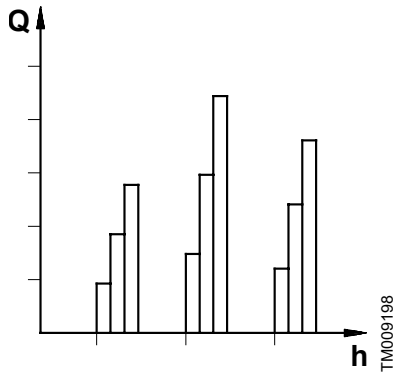
	Flow rate: Highly variable **Pressure:** Constant	**Flow rate:** Highly variable with sudden changes **Pressure:** Constant	**Flow rate:** Constant and known **Pressure:** Constant
Duty-time profile	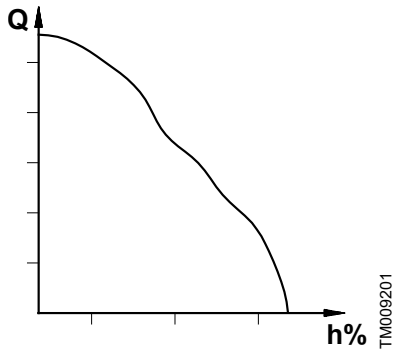	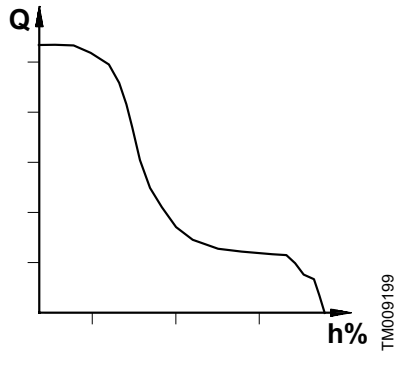	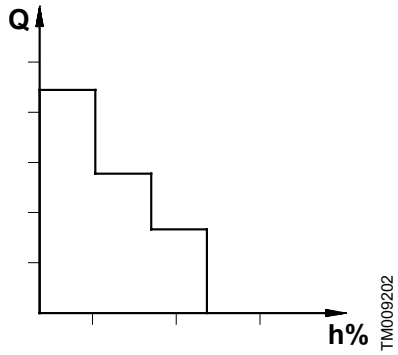
	Consumption is highly variable. Continuously variable speed control of the pumps is recommended.	Consumption is highly variable with sudden changes. Continuously variable speed control of the pumps is recommended.	Variations in consumption are regular, and known. Simple control is recommended.

Inlet pressure

If there is positive inlet pressure, take the inlet pressure into consideration to ensure safe and energy-optimal operation.

Ensure that the system maximum head and the inlet pressure do not exceed the PN rating for the system.

System selection

Select the system on the basis of these factors:

- maximum flow requirement
- required outlet pressure
- load profile
- number of pumps required
- possible standby pumps.

Accessories

When you have selected the optimum system, consider whether you require any of the accessories mentioned below.

For further information about optional equipment and accessories, see the sections on optional equipment and accessories.

Dry-running protection

Every system must be protected against dry running.

The inlet conditions determine the type of dry-running protection:

- If the system draws water from a tank or a well, select a level switch or an electrode relay for dry-running protection.
- If the system has inlet pressure, select a pressure transmitter or a pressure switch for dry-running protection.

Pilot pump

If a pilot pump is selected, size it according to the size of the main pumps in the system. The flow of the pilot pump should not be less than 1/5 of the flow of a main pump at the desired setpoint.

Diaphragm tank

The need for a diaphragm tank is estimated on the basis of the following guidelines:

- Due to the stop function, all systems in buildings must be equipped with a diaphragm tank.
- In water supply applications, a diaphragm tank is usually not required, because miles of piping both provide the necessary capacity and have elasticity to offer sufficient capacity.

To avoid the risk of water hammer, a diaphragm tank may be necessary.

- Estimate the need for a diaphragm tank for the systems in industrial applications from situation to situation on the basis of the individual factors on site.

If the system includes a pilot pump, the diaphragm tank is to be sized according to the capacity of this pump.

The tank consists of a bladder usually made of rubber. The water is contained in the bladder and does not come in direct contact with air in the tank.

As the bladder fills with water, it expands into the pressurized air space in the tank. As system uses water, the bladder collapses until the water is almost emptied, activating the system, before the minimum pressure is reached.

The tank is pressurized at the factory, typically around 1.5 bar, but the pressure must be adjusted according to the setpoint using the air valve located near the top of the tank, with no system pressure at the tank inlet.

- In E-systems, 0.7 x setpoint.

When multiple setpoints are active, the tank pressure must be based on the lowest value.

Recommended tank size V_0 can be calculated from the following equations:

$$V_0 = \frac{K_Q \times Q \times (p_{set} + 1)^2 \times \left(\frac{3600}{N} - 10\right)}{3.6 \times (k_f \times P_{set} + 1) \times k_H \times P_{set}}$$

Symbol	Description
V_0	Tank volume
k_Q	The ratio between rated flow rate Q_{nom} of the smallest pump in the system and the flow rate Q_{min} at which the pump is changed to on/off operation $k_Q = Q_{min}/Q_{nom}$ It is only used in E-system with speed regulated pumps and can be set to 2-10 % depending on the pump size.
Q	Nominal flow rate of the smallest pump in the system
P_{set}	Setpoint of the system
k_H	The ratio between the on/off band ΔH and the setpoint P_{set}, $k_H = \Delta H/P_{set}$
k_f	The ratio between the tank precharge pressure P_0 and the setpoint P_{set} $k_f = P_0/P_{set}$ 0.7 for the system
N	Maximum number of starts/stops per hour which depends on the motor type or size and the application, in systems with E-motors it is allowed to have up to 200 times per hour. All prefabricated MPC-E/EC systems delivered with tanks are calculated based on this value.

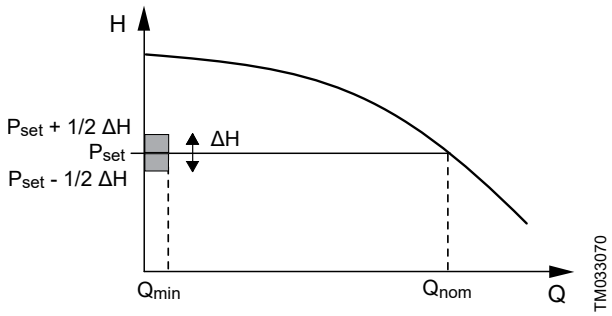

The tank values are based on the following data:

Symbol	Hydro MPC-E/EC
Q	Q_{nom} of one pump
k_Q	10 %
P_{set}	4 bar
k_H	20 %
k_f	0.7

Example of systems with CRE 10

Symbol	Hydro MPC-E
Q [m^3/h]	10
k_Q	10 %
k_H	20 %
P_{set} [bar]	4
N [h^{-1}]	200
Result	
V_0 [liter]	18.3
Selected tank [liter]	18
ΔH [bar]	0.8
P_0 [bar]	2.8

For further information, see the document Tank calculation in E systems in the section on product manuals.

Related information

9. Optional equipment
10. Accessories
11. Product manuals

Example: How to select a system

- A flow rate of 67.5 m^3/h is required.
- A head of 73 meters is required.

Draw a vertical line from the required flow rate.
Draw a horizontal line from the required head.
The intersection of the two lines gives the number of pumps required for the system (three CRE, CRIE 20-7).
The pump type best meeting this specification can be determined using the y-axis, for instance, three CRE, CRIE 20-7.
Select only systems with performance ranges within the hatched area in the example.

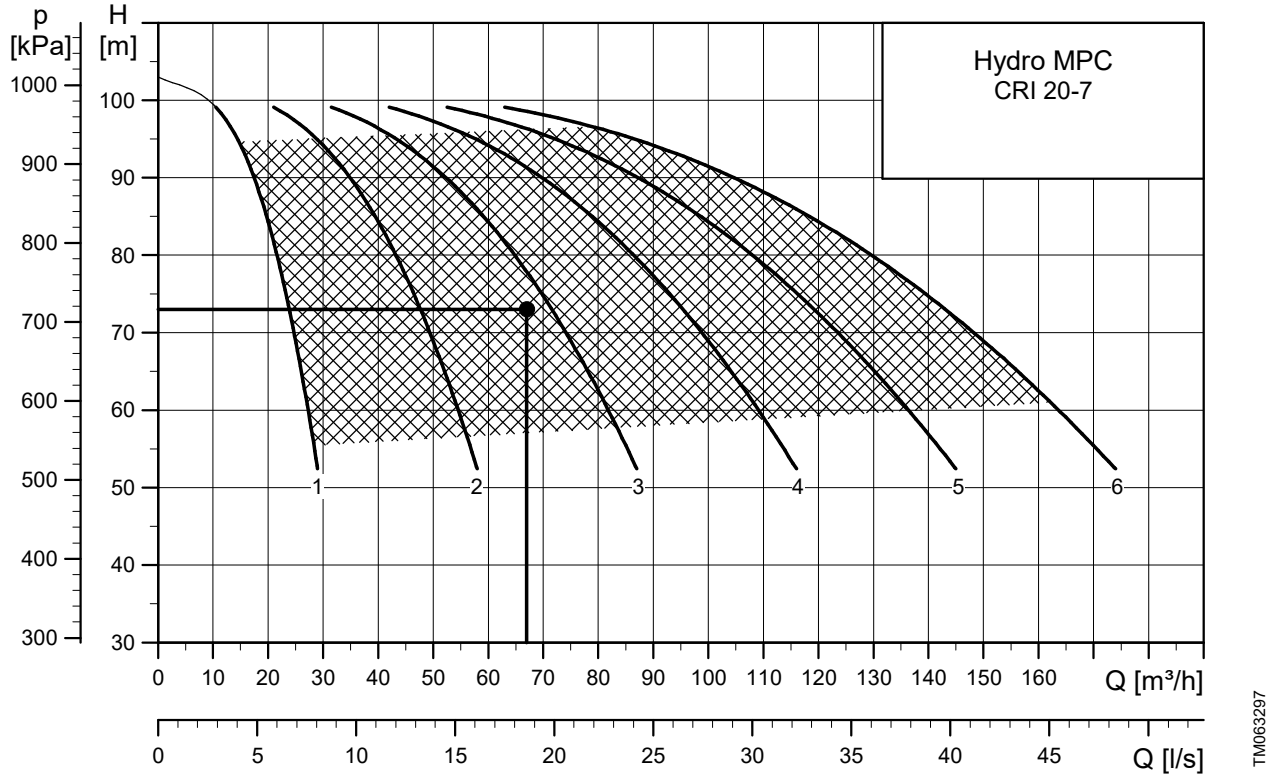

7. Curve conditions

Understanding the performance curve

The x-axis showing the flow rate (Q) in m^3/h is common to all the curves; the y-axis showing the head (H) in meters has been adapted to the individual pump type.

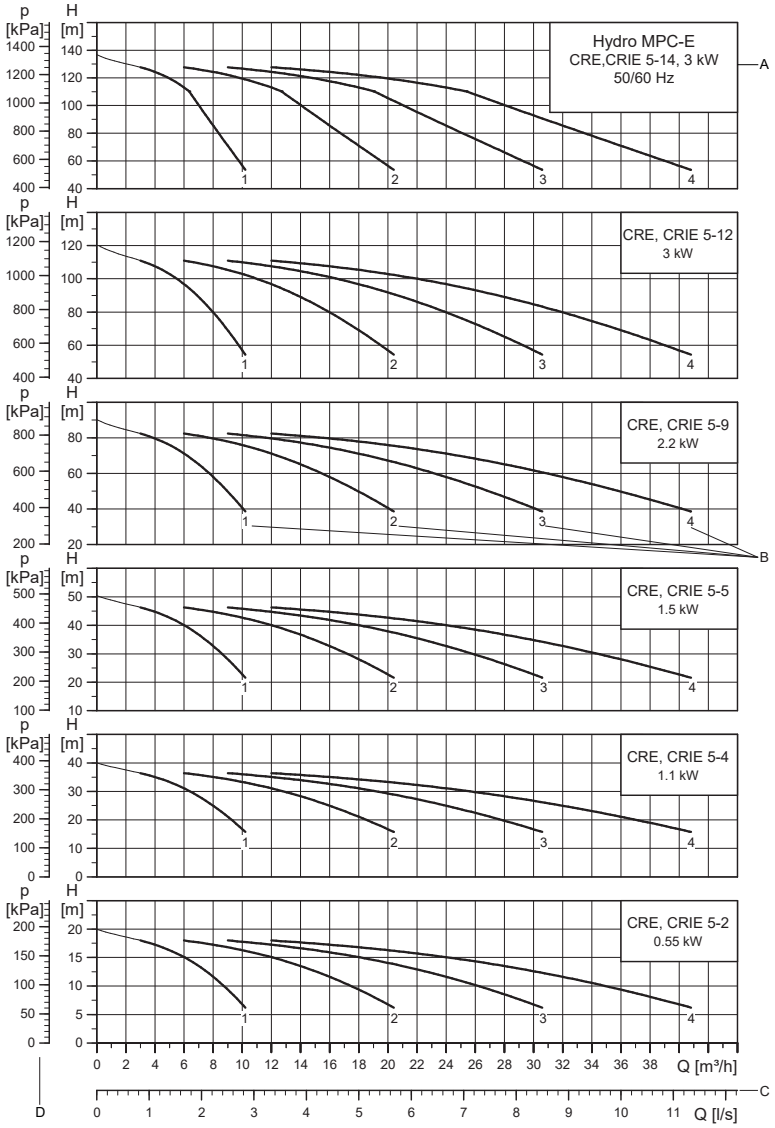

Pos.	Description
A	Specification of system, pump type, frequency and the standard to which the QH curves correspond.
B	Specification of system performance based on the number of pumps in operation: • 1: one pump in operation • 2: two pumps in operation • 3: three pumps in operation • 4: four pumps in operation.
C	The x-axis is common to all pump types.
D	The y-axis is adapted to the individual pump type.

How to read the performance curve

The guidelines below apply to the curves on the following pages:

- Measurements are made with airless water at a temperature of 20 °C (68 °F).
- The curves apply to a kinematic viscosity: υ = 1 mm^2/s (1 cSt).
- The QH curves apply to fixed speeds of 2900 RPM at 50 Hz and 3480 RPM at 60 Hz.

In most cases, the actual speed deviates from the above-mentioned speeds. For actual curves, refer to Grundfos Product Center where the pump curves include the characteristics of the selected motor and therefore show curves at actual speeds. In Grundfos Product Center, you can also adjust the curves depending on the density and viscosity.

- The conversion between head H [m] ([ft]) and pressure P [kPa] ([psi]) applies to a specific weight equal to 8.3 lb/gal, water density of ρ = 1000 kg/m^3.
- Losses in fittings and valves are not included.

8. Performance curves and technical data

Hydro MPC-E with CRIE 3

Curve charts

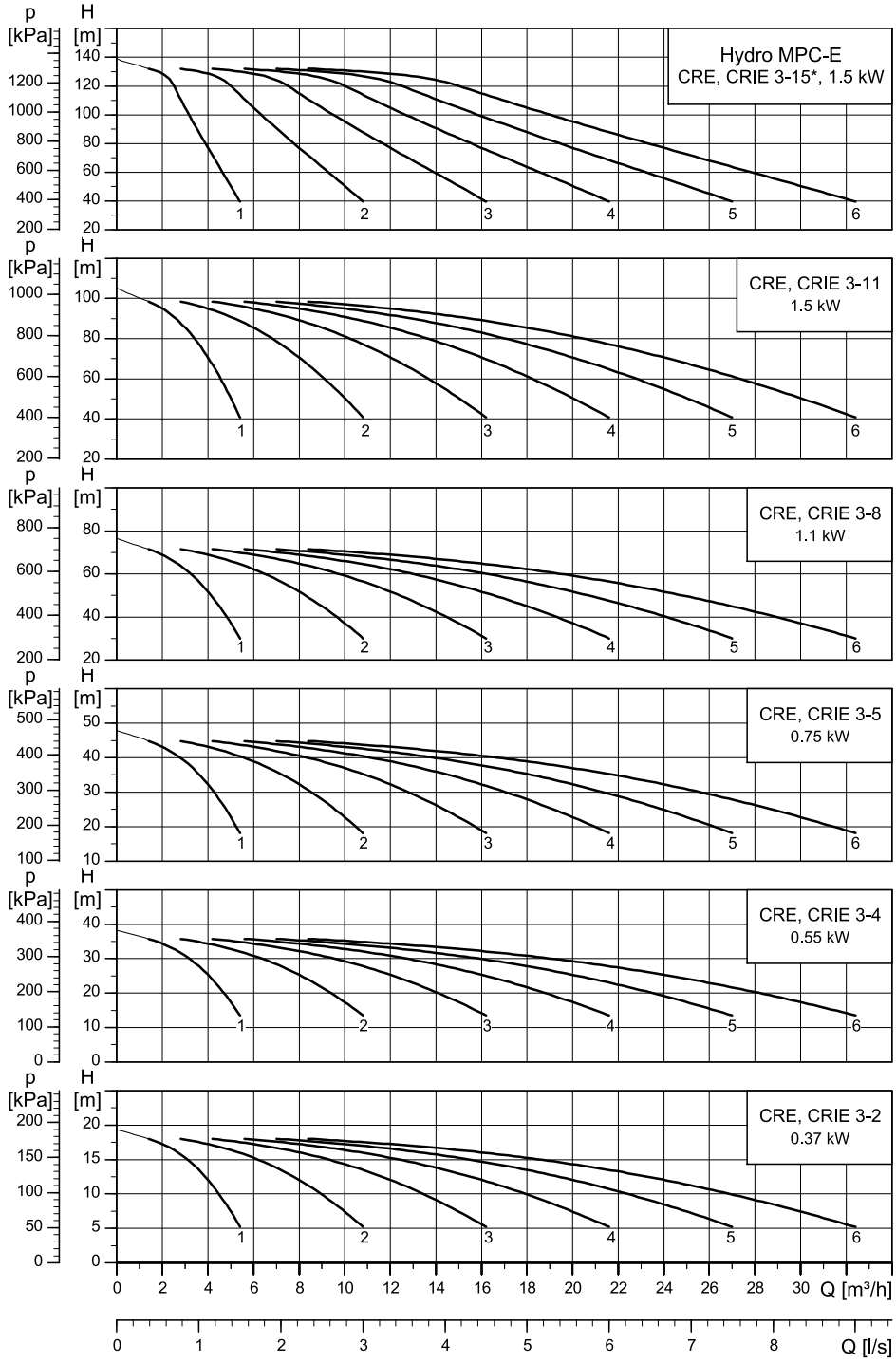

* For undersized motors, the maximum speed depends on the power usage.
Losses in fittings and valves are not included.

Dimensional sketch

Below is the dimensional sketch of a system in different designs. The system is shown as an example. The pumps supplied may differ from the sketch.

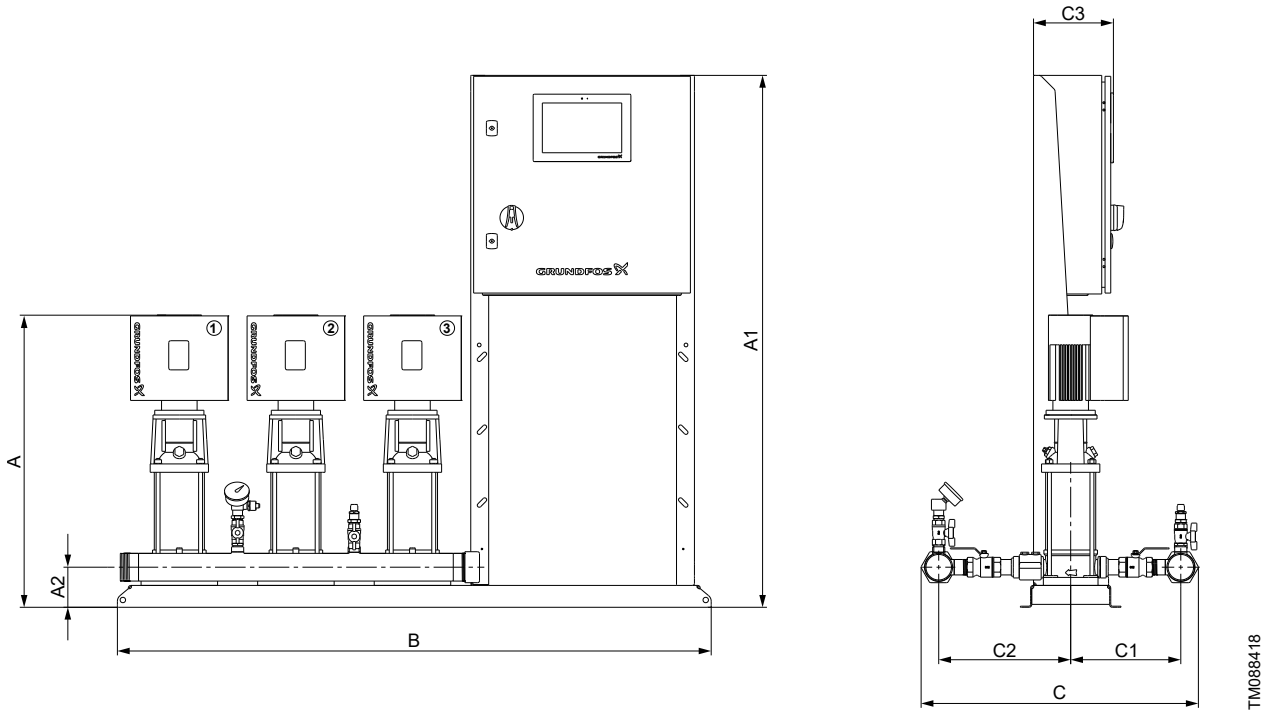

Design GA

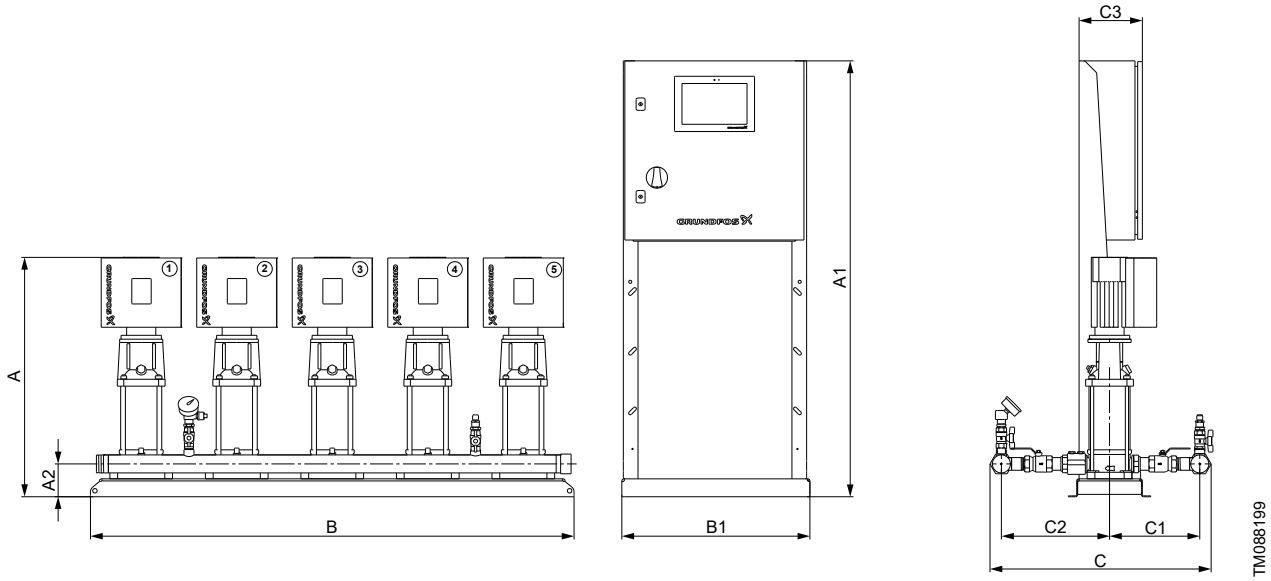

Design GD

Electrical data, dimensions and weights

Number of pumps	Pump type	Motor power [kW]	Motor type	Voltage code	Rated current [A]	Connections	A [mm]	A1 [mm]	A2 [mm]	B [mm]	B1 [mm]	C [mm]	C1 [mm]	C2 [mm]	C3 [mm]	Net weight [kg]	Design
2	CRIE 3-2	0.37	❍	V1	2.4	R 2	533	1460	112	1050	-	726	295	355	210	89	GA
	CRIE 3-4	0.55	❍	V1	3.45	R 2	551	1460	112	1050	-	726	295	355	210	90	GA
	CRIE 3-5	0.75	❍	V1	4.7	R 2	575	1460	112	1050	-	726	295	355	210	94	GA
	CRIE 3-8	1.1	❍	V1	6.7	R 2	629	1460	112	1050	-	726	295	355	210	98	GA
	CRIE 3-11	1.5	●	V1	6.4	R 2	759	1460	112	1050	-	726	295	355	210	108	GA
	CRIE 3-15 [9]	1.5	●	V1	6.4	R 2	831	1460	112	1050	-	726	295	355	210	112	GA
3	CRIE 3-2	0.37	❍	V1	2.4	R 2	533	1460	112	1350	-	726	295	355	210	117	GA
	CRIE 3-4	0.55	❍	V1	3.45	R 2	551	1460	112	1350	-	726	295	355	210	119	GA
	CRIE 3-5	0.75	❍	V1	4.7	R 2	575	1460	112	1350	-	726	295	355	210	124	GA
	CRIE 3-8	1.1	❍	V1	6.7	R 2	629	1460	112	1350	-	726	295	355	210	130	GA
	CRIE 3-11	1.5	●	V1	9.3	R 2	759	1460	112	1350	-	726	295	355	210	147	GA
	CRIE 3-15 [9]	1.5	●	V1	9.3	R 2	831	1460	112	1350	-	726	295	355	210	152	GA
4	CRIE 3-2	0.37	❍	V1	4.8	R 2 1/2	533	1460	112	1890	-	741	295	355	210	159	GA
	CRIE 3-4	0.55	❍	V1	6.9	R 2 1/2	551	1460	112	1890	-	741	295	355	210	161	GA
	CRIE 3-5	0.75	❍	V1	9.4	R 2 1/2	575	1460	112	1890	-	741	295	355	210	169	GA
	CRIE 3-8	1.1	❍	V1	12.6	R 2 1/2	629	1460	112	1890	-	741	295	355	210	177	GA
	CRIE 3-11	1.5	●	V1	12.1	R 2 1/2	759	1460	112	1670	-	741	295	355	210	188	GA
	CRIE 3-15 [9]	1.5	●	V1	12.1	R 2 1/2	831	1460	112	1670	-	741	295	355	210	195	GA
5	CRIE 3-2	0.37	❍	V1	4.8	R 2 1/2	533	1460	112	1565	630	741	295	355	210	197	GD
	CRIE 3-4	0.55	❍	V1	6.9	R 2 1/2	551	1460	112	1565	630	741	295	355	210	200	GD
	CRIE 3-5	0.75	❍	V1	9.4	R 2 1/2	575	1460	112	1565	630	741	295	355	210	209	GD
	CRIE 3-8	1.1	❍	V1	12.6	R 2 1/2	629	1460	112	1565	630	741	295	355	210	220	GD
	CRIE 3-11	1.5	●	V1	14.9	R 2 1/2	759	1460	112	1565	630	741	295	355	210	247	GD
	CRIE 3-15 [9]	1.5	●	V1	14.9	R 2 1/2	831	1460	112	1565	630	741	295	355	210	256	GD
6	CRIE 3-2	0.37	❍	V1	4.8	R 2 1/2	533	1460	112	1885	630	741	295	355	210	227	GD
	CRIE 3-4	0.55	❍	V1	6.9	R 2 1/2	4	1460	112	1885	630	741	295	355	210	231	GD
	CRIE 3-5	0.75	❍	V1	9.4	R 2 1/2	575	1460	112	1885	630	741	295	355	210	241	GD
	CRIE 3-8	1.1	❍	V1	12.6	R 2 1/2	629	1460	112	1885	630	741	295	355	210	254	GD
	CRIE 3-11	1.5	●	V1	17.7	R 2 1/2	759	1460	112	1885	630	741	295	355	210	287	GD
	CRIE 3-15 [9]	1.5	●	V1	17.7	R 2 1/2	831	1460	112	1885	630	741	295	355	210	298	GD

[9] Pump with undersized motor

Legend

- ● Three-phase motors
- ❍ Single-phase motors
- - Not applicable

Explanation

- Motor power is the power per pump.
- Rated current: Additional current applies for the control circuit depending on design.
- Voltage code, V1: 3 × 400 V ± 5 %, 50 Hz, N, PE.
- Design GA: The pumps and the control panel are mounted on the same base frame.
- Design GD: The pumps and the control panel are mounted on their own base frames. The base frames are separated. The control panel can be placed up to 3 meters from the pumps.
- Dimensions may vary by ± 10 mm.

Hydro MPC-E with CRIE 5

Curve charts

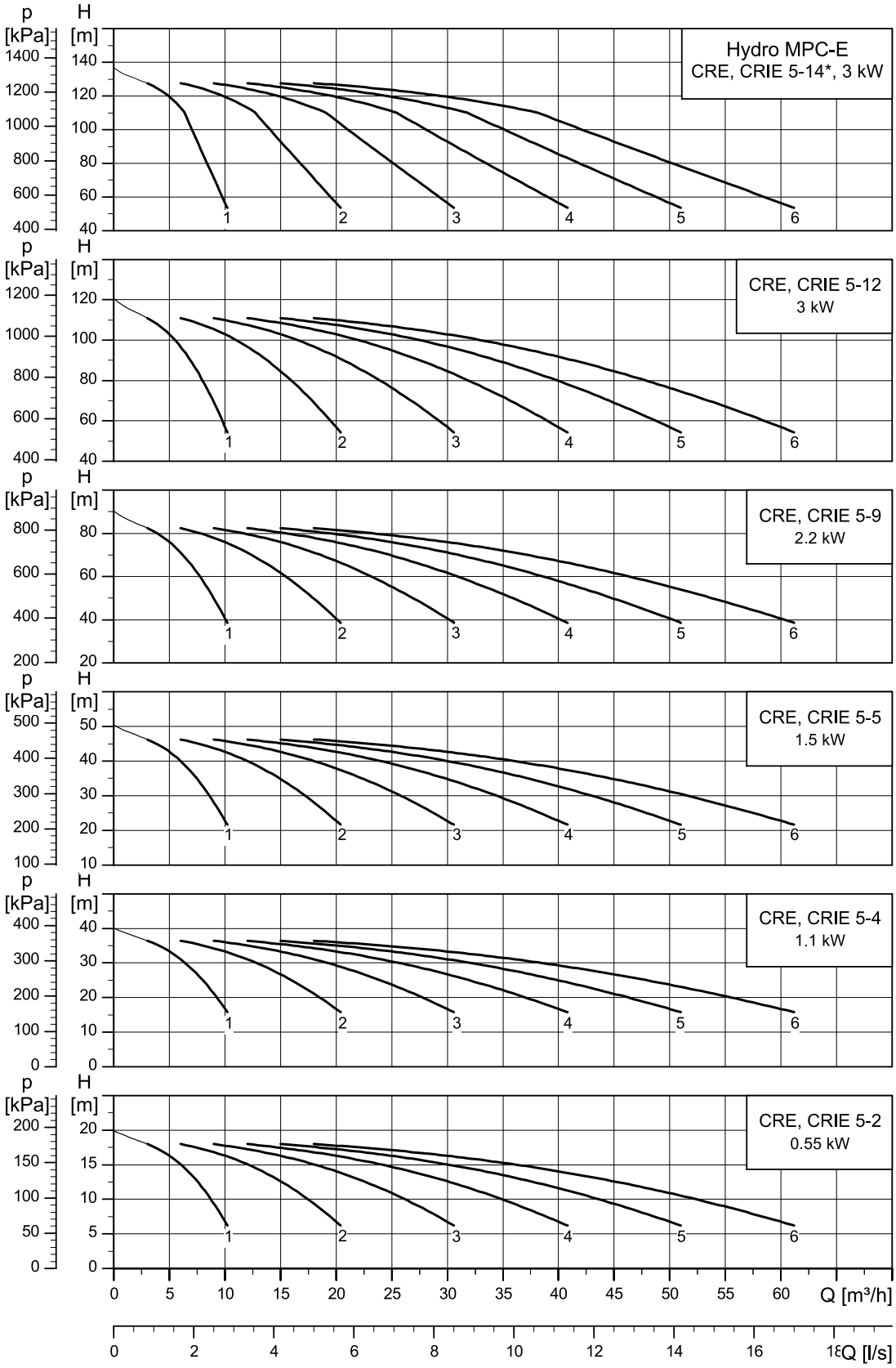

* For undersized motors, the maximum speed depends on the power usage.
Losses in fittings and valves are not included.

Dimensional sketch

Below is the dimensional sketch of a system in different designs. The system is shown as an example. The pumps supplied may differ from the sketch.

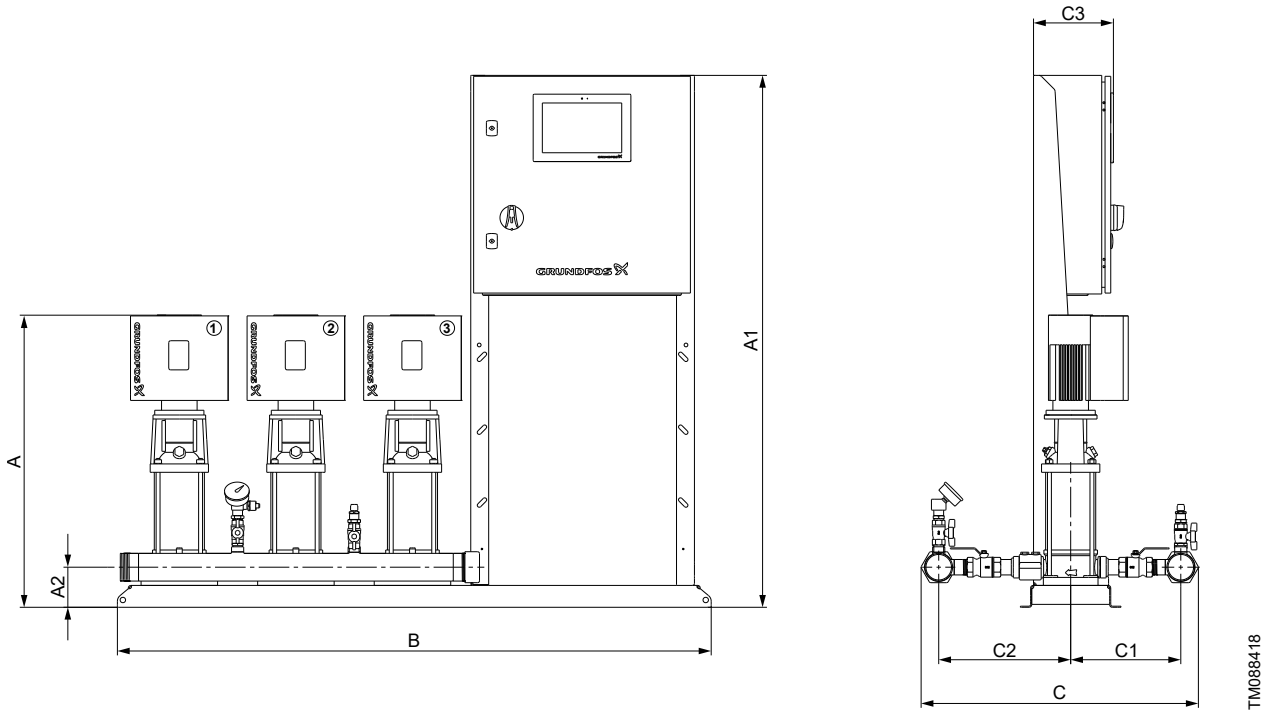

Design GA

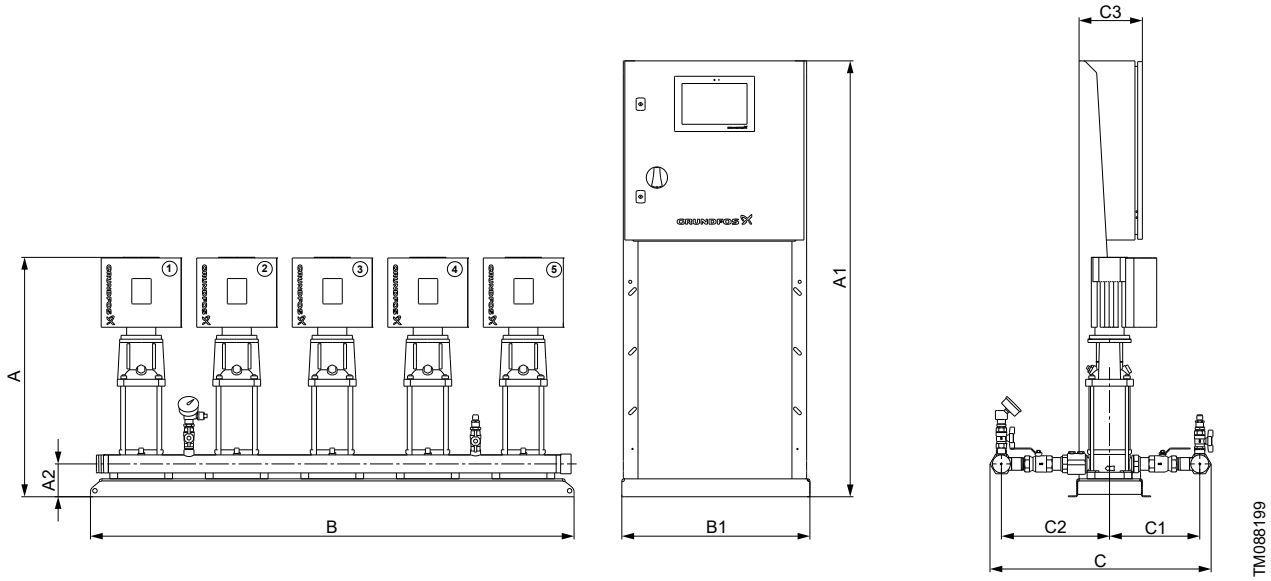

Design GD

Electrical data, dimensions and weights

Number of pumps	Pump type	Motor power [kW]	Motor type	Voltage code	Rated current [A]	Connections	A [mm]	A1 [mm]	A2 [mm]	B [mm]	B1 [mm]	C [mm]	C1 [mm]	C2 [mm]	C3 [mm]	Net weight [kg]	Design
2	CRIE 5-2	0.55	❍	V1	3.45	R 2	533	1460	112	1050	-	726	295	355	210	89	GA
	CRIE 5-4	1.1	❍	V1	6.7	R 2	593	1460	112	1050	-	726	295	355	210	96	GA
	CRIE 5-5	1.5	●	V1	6.4	R 2	696	1460	112	1050	-	726	295	355	210	105	GA
	CRIE 5-9	2.2	●	V1	8.9	R 2	804	1460	112	1050	-	726	295	355	210	113	GA
	CRIE 5-12	3	●	V1	12.1	R 2	950	1460	112	1050	-	726	295	355	210	130	GA
	CRIE 5-14 [10]	3	●	V1	12.1	R 2	1004	1460	112	1050	-	726	295	355	210	133	GA
3	CRIE 5-2	0.55	❍	V1	3.45	R 2	533	1460	112	1350	-	726	295	355	210	117	GA
	CRIE 5-4	1.1	❍	V1	6.7	R 2	593	1460	112	1350	-	726	295	355	210	127	GA
	CRIE 5-5	1.5	●	V1	9.3	R 2	696	1460	112	1350	-	726	295	355	210	142	GA
	CRIE 5-9	2.2	●	V1	12.9	R 2	804	1460	112	1570	-	726	295	355	210	164	GA
	CRIE 5-12	3	●	V1	17.7	R 2	950	1460	112	1350	-	726	295	355	210	179	GA
	CRIE 5-14 [10]	3	●	V1	17.7	R 2	1004	1460	112	1350	-	726	295	355	210	183	GA
4	CRIE 5-2	0.55	❍	V1	6.9	R 2 1/2	533	1460	112	1890	-	741	295	355	210	160	GA
	CRIE 5-4	1.1	❍	V1	12.6	R 2 1/2	593	1460	112	1890	-	741	295	355	210	173	GA
	CRIE 5-5	1.5	●	V1	12.1	R 2 1/2	696	1460	112	1670	-	741	295	355	210	182	GA
	CRIE 5-9	2.2	●	V1	16.9	R 2 1/2	804	1460	112	1890	-	741	295	355	210	208	GA
	CRIE 5-12	3	●	V1	23.3	R 2 1/2	950	1460	112	1670	-	741	295	355	210	231	GA
	CRIE 5-14 [10]	3	●	V1	23.3	R 2 1/2	1004	1460	112	1670	-	741	295	355	210	236	GA
5	CRIE 5-2	0.55	❍	V1	6.9	R 2 1/2	533	1460	112	1565	630	741	295	355	210	198	GD
	CRIE 5-4	1.1	❍	V1	12.6	R 2 1/2	593	1460	112	1565	630	741	295	355	210	215	GD
	CRIE 5-5	1.5	●	V1	14.9	R 2 1/2	696	1460	112	1565	630	741	295	355	210	240	GD
	CRIE 5-9	2.2	●	V1	21	R 2 1/2	804	1460	112	1565	630	741	295	355	210	258	GD
	CRIE 5-12	3	●	V1	29	R 2 1/2	950	1460	112	1565	630	741	295	355	210	302	GD
	CRIE 5-14 [10]	3	●	V1	29	R 2 1/2	1004	1460	112	1565	630	741	295	355	210	308	GD
6	CRIE 5-2	0.55	❍	V1	6.9	R 2 1/2	533	1460	112	1885	630	741	295	355	210	228	GD
	CRIE 5-4	1.1	❍	V1	12.6	R 2 1/2	593	1460	112	1885	630	741	295	355	210	248	GD
	CRIE 5-5	1.5	●	V1	17.7	R 2 1/2	696	1460	112	1885	630	741	295	355	210	278	GD
	CRIE 5-9	2.2	●	V1	25	R 2 1/2	804	1460	112	1885	630	741	295	355	210	301	GD
	CRIE 5-12	3	●	V1	34.6	R 2 1/2	950	1460	112	1885	630	741	295	355	210	352	GD
	CRIE 5-14 [10]	3	●	V1	34.6	R 2 1/2	1004	1460	112	1885	630	741	295	355	210	360	GD

[10] Pump with undersized motor

Legend

- ● Three-phase motors
- ❍ Single-phase motors
- - Not applicable

Explanation

- Motor power is the power per pump.
- Rated current: Additional current applies for the control circuit depending on design.
- Voltage code, V1: 3 × 400 V ± 5 %, 50 Hz, N, PE.
- Design GA: The pumps and the control panel are mounted on the same base frame.
- Design GD: The pumps and the control panel are mounted on their own base frames. The base frames are separated. The control panel can be placed up to 3 meters from the pumps.
- Dimensions may vary by ± 10 mm.

Hydro MPC-E with CRIE 10

Curve charts

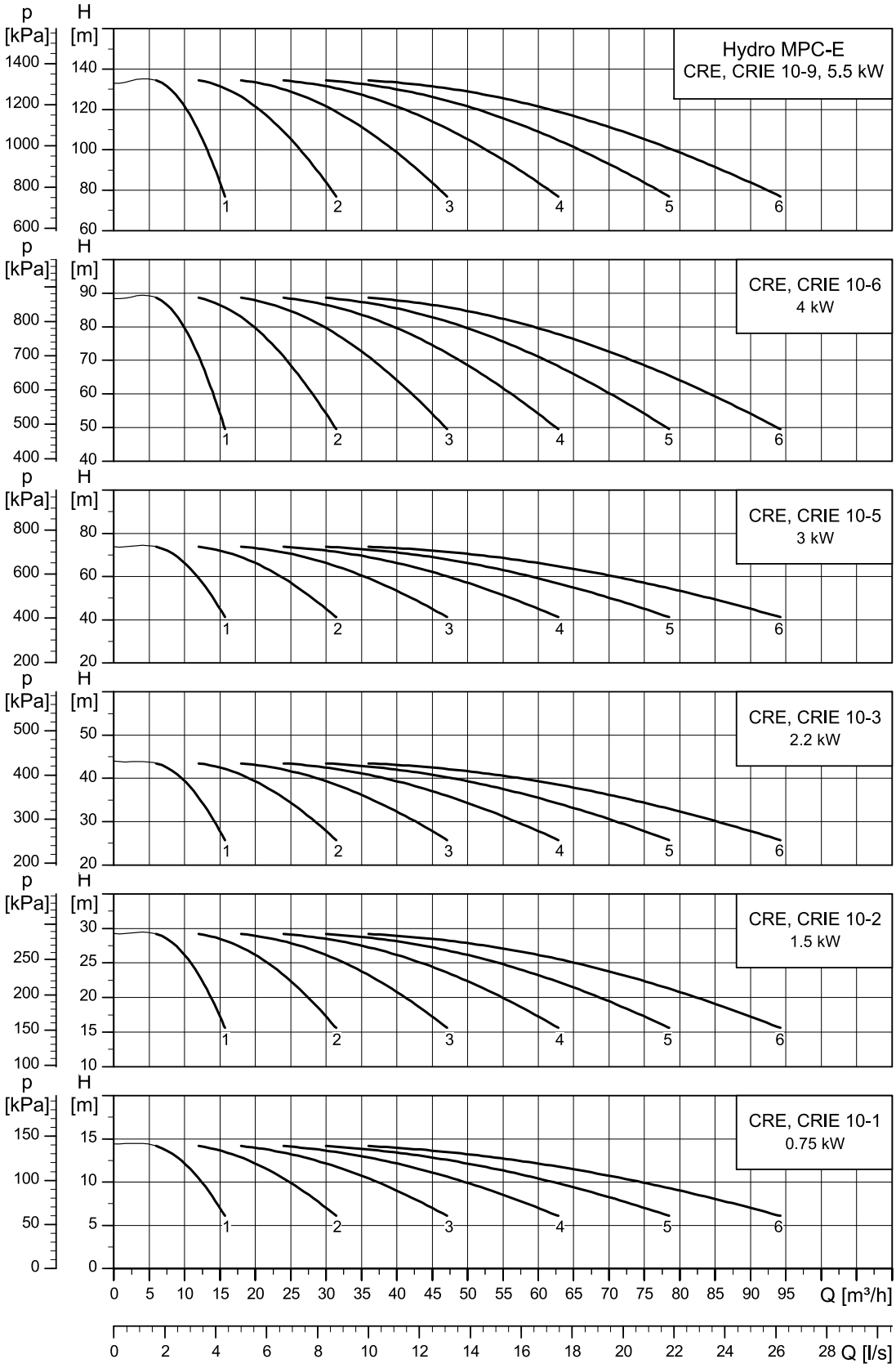

Losses in fittings and valves are not included.

Dimensional sketch

Below is the dimensional sketch of a system in different designs. The system is shown as an example. The pumps supplied may differ from the sketch.

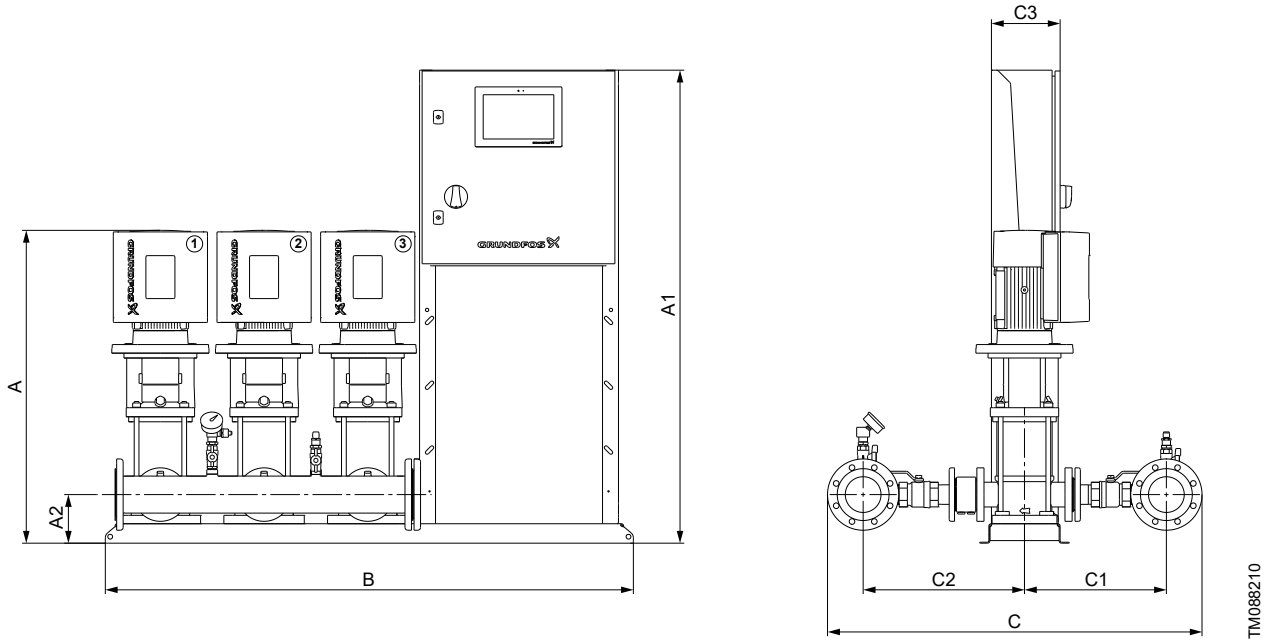

Design GA

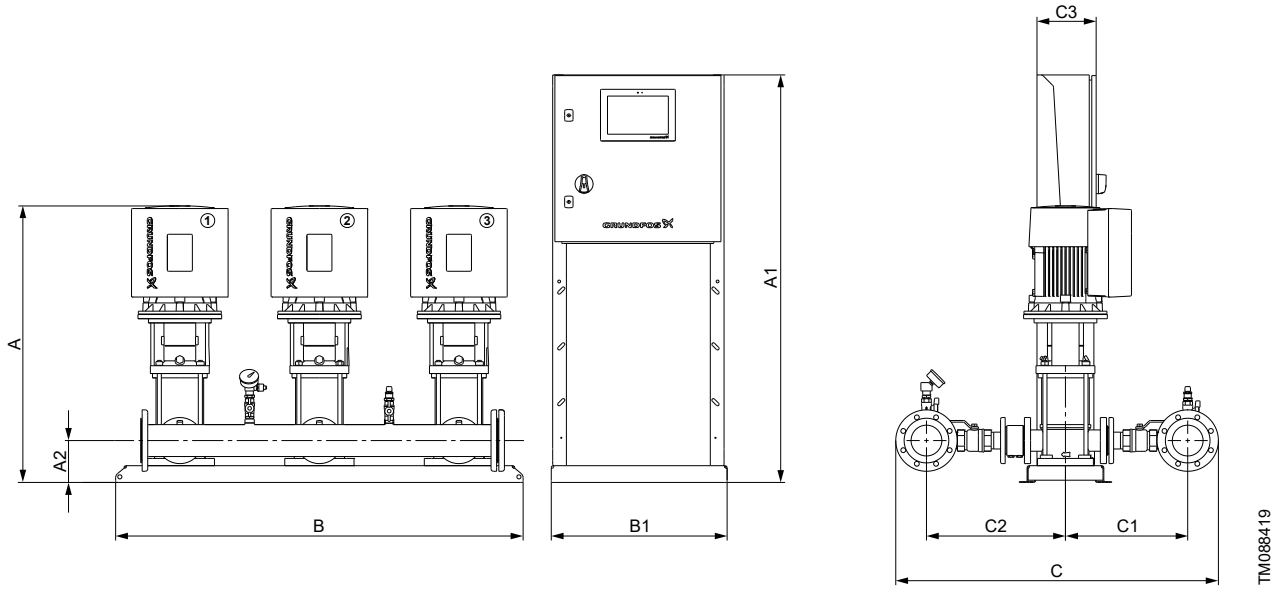

Design GD

Electrical data, dimensions and weights

Number of pumps	Pump type	Motor power [kW]	Motor type	Voltage code	Rated current [A]	Connections	A [mm]	A1 [mm]	A2 [mm]	B [mm]	B1 [mm]	C [mm]	C1 [mm]	C2 [mm]	C3 [mm]	Net weight [kg]	Design
2	CRIE 10-1	0.75	❍	V1	4.7	R 2 1/2	633	1460	142	1080	-	891	371	431	210	125	GA
	CRIE 10-2	1.5	●	V1	6.4	R 2 1/2	709	1460	142	1080	-	891	371	431	210	137	GA
	CRIE 10-3	2.2	●	V1	8.9	R 2 1/2	739	1460	142	1080	-	891	371	431	210	143	GA
	CRIE 10-5	3	●	V1	12.1	R 2 1/2	864	1460	142	1080	-	891	371	431	210	159	GA
	CRIE 10-6	4	●	V1	15.5	R 2 1/2	894	1460	142	1080	-	891	371	431	210	167	GA
	CRIE 10-9	5.5	●	V1	20.7	R 2 1/2	1047	1460	142	1080	-	891	371	431	210	216	GA
3	CRIE 10-1	0.75	❍	V1	4.7	DN 80	633	1460	142	1380	-	1000	371	431	210	186	GA
	CRIE 10-2	1.5	●	V1	9.3	DN 80	709	1460	142	1380	-	1000	371	431	210	205	GA
	CRIE 10-3	2.2	●	V1	12.9	DN 80	739	1460	142	1600	-	1000	371	431	210	225	GA
	CRIE 10-5	3	●	V1	17.7	DN 80	864	1460	142	1380	-	1000	371	431	210	238	GA
	CRIE 10-6	4	●	V1	22.9	DN 80	894	1460	142	1600	-	1000	371	431	210	262	GA
	CRIE 10-9	5.5	●	V1	30.7	DN 80	1047	1460	142	1600	-	1000	371	431	210	334	GA
4	CRIE 10-1	0.75	❍	V1	9.4	DN 80	633	1460	142	1920	-	1000	371	431	210	244	GA
	CRIE 10-2	1.5	●	V1	12.1	DN 80	709	1460	142	1700	-	1000	371	431	210	257	GA
	CRIE 10-3	2.2	●	V1	16.9	DN 80	739	1460	142	1920	-	1000	371	431	210	281	GA
	CRIE 10-5	3	●	V1	23.3	DN 80	864	1460	142	1700	-	1000	371	431	210	301	GA
	CRIE 10-6	4	●	V1	30.3	DN 80	894	1460	142	1920	-	1000	371	431	210	329	GA
	CRIE 10-9	5.5	●	V1	40.6	DN 80	1047	1460	142	1920	-	1000	371	431	210	426	GA
5	CRIE 10-1	0.75	❍	V1	9.4	DN 100	633	1460	142	1642	630	1020	371	431	210	301	GD
	CRIE 10-2	1.5	●	V1	14.9	DN 100	709	1460	142	1642	630	1020	371	431	210	333	GD
	CRIE 10-3	2.2	●	V1	21	DN 100	739	1460	142	1642	630	1020	371	431	210	348	GD
	CRIE 10-5	3	●	V1	29	DN 100	864	1460	142	1642	630	1020	371	431	210	388	GD
	CRIE 10-6	4	●	V1	37.7	DN 100	894	1460	142	1642	630	1020	371	431	210	410	GD
	CRIE 10-9	5.5	●	V1	50.6	DN 100	1047	1460	142	1642	630	1020	371	431	210	531	GD
6	CRIE 10-1	0.75	❍	V1	9.4	DN 100	633	1460	142	1962	630	1020	371	431	210	354	GD
	CRIE 10-2	1.5	●	V1	17.7	DN 100	709	1460	142	1962	630	1020	371	431	210	392	GD
	CRIE 10-3	2.2	●	V1	25	DN 100	739	1460	142	1962	630	1020	371	431	210	410	GD
	CRIE 10-5	3	●	V1	34.6	DN 100	864	1460	142	1962	630	1020	371	431	210	458	GD
	CRIE 10-6	4	●	V1	45	DN 100	894	1460	142	1962	630	1020	371	431	210	484	GD
	CRIE 10-9	5.5	●	V1	60.5	DN 100	1047	1460	142	1962	630	1020	371	431	210	631	GD

Legend

- ● Three-phase motors
- ❍ Single-phase motors
- - Not applicable

Explanation

- Motor power is the power per pump.
- Rated current: Additional current applies for the control circuit depending on design.
- Voltage code, V1: 3 × 400 V ± 5 %, 50 Hz, N, PE.
- Design GA: The pumps and the control panel are mounted on the same base frame.
- Design GD: The pumps and the control panel are mounted on their own base frames. The base frames are separated. The control panel can be placed up to 3 meters from the pumps.
- Dimensions may vary by ± 10 mm.

Hydro MPC-E with CRIE 15

Curve charts

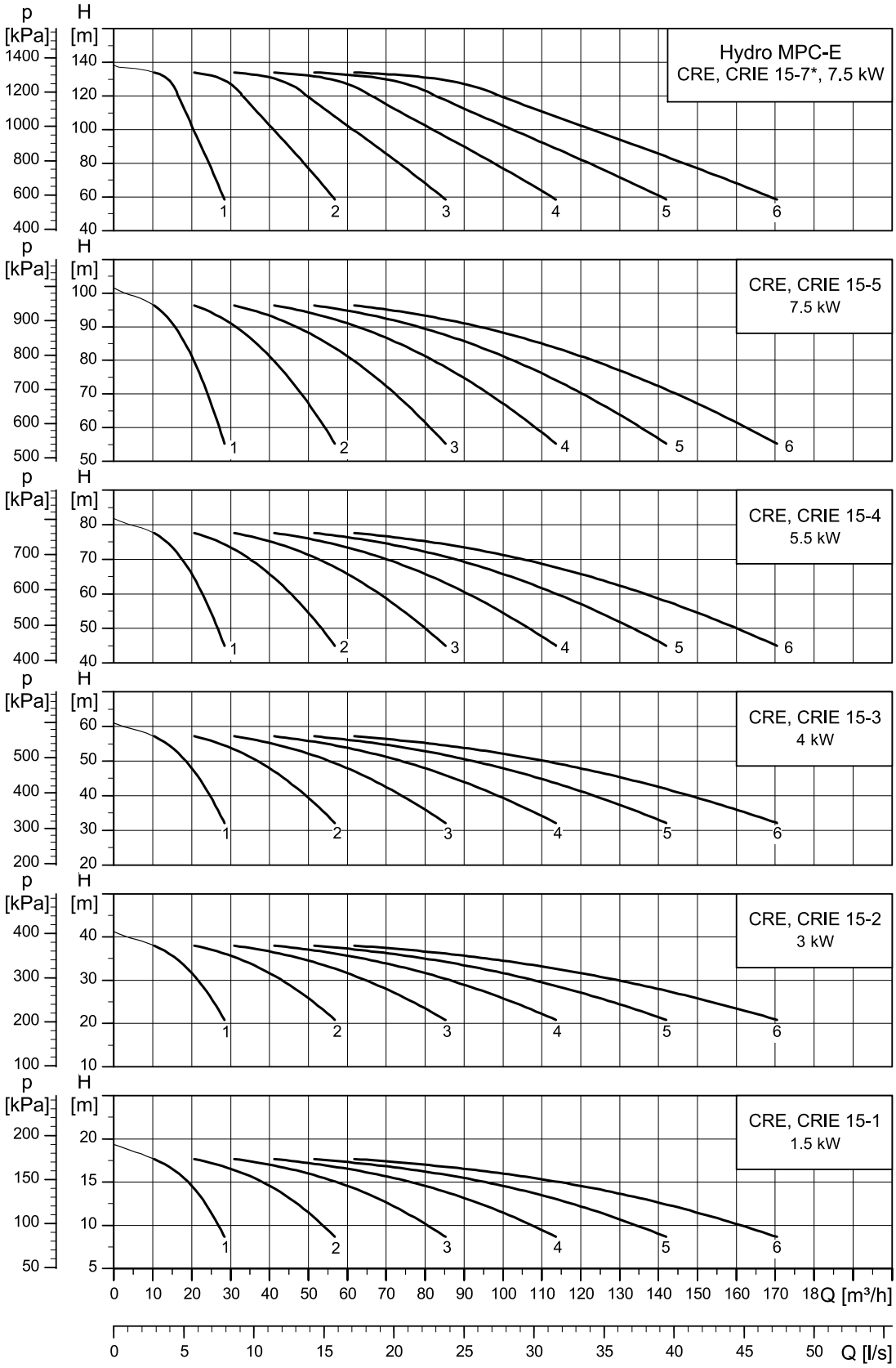

* For undersized motors, the maximum speed depends on the power usage.
Losses in fittings and valves are not included.

Dimensional sketch

Below is the dimensional sketch of a system in different designs. The system is shown as an example. The pumps supplied may differ from the sketch.

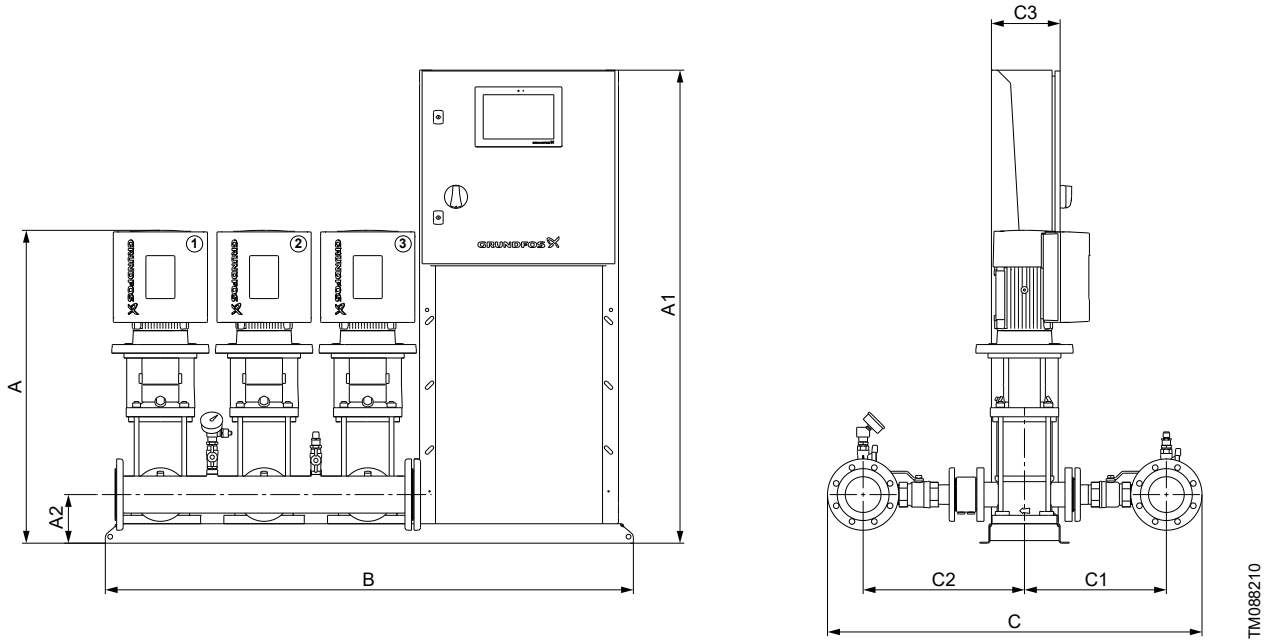

Design GA

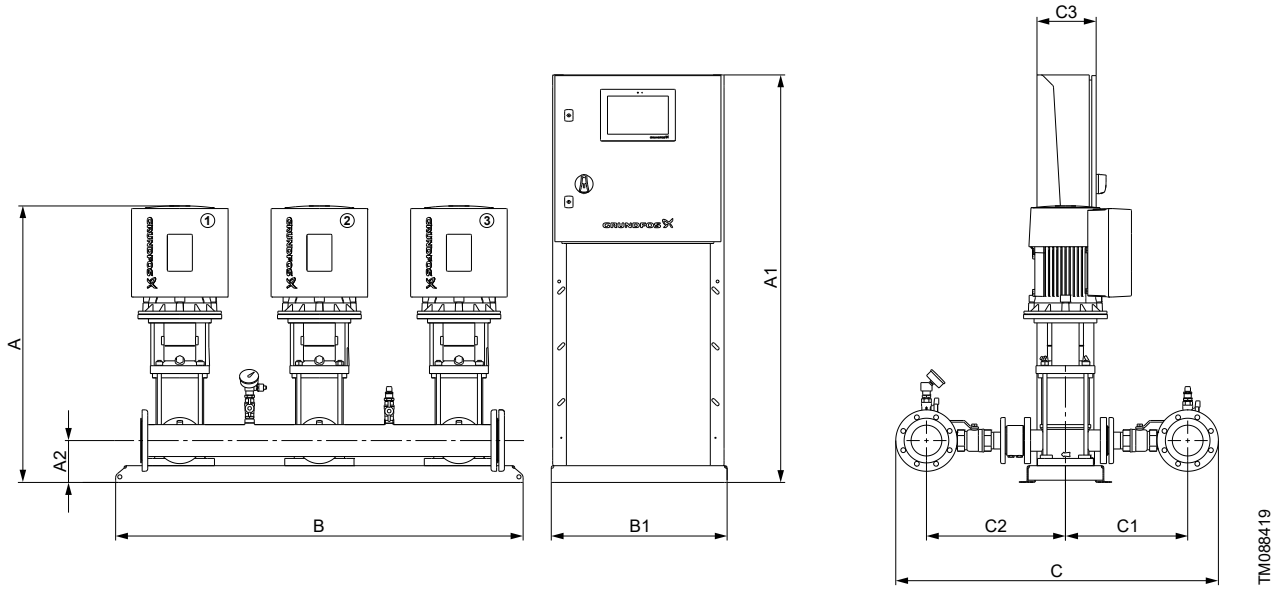

Design GD

Electrical data, dimensions and weights

Number of pumps	Pump type	Motor power [kW]	Motor type	Voltage code	Rated current [A]	Connections	A [mm]	A1 [mm]	A2 [mm]	B [mm]	B1 [mm]	C [mm]	C1 [mm]	C2 [mm]	C3 [mm]	Net weight [kg]	Design
2	CRIE 15-1	1.5	●	V1	6.4	DN 80	749	1460	152	1110	-	1135	438	497	210	164	GA
	CRIE 15-2	3	●	V1	12.1	DN 80	814	1460	152	1110	-	1135	438	497	210	182	GA
	CRIE 15-3	4	●	V1	15.5	DN 80	859	1460	152	1110	-	1135	438	497	210	191	GA
	CRIE 15-4	5.5	●	V1	20.7	DN 80	967	1460	152	1110	-	1135	438	497	210	235	GA
	CRIE 15-5	7.5	●	V1	28	DN 80	1036	1460	152	1022	630	1135	438	497	210	275	GD
	CRIE 15-7 [11]	7.5	●	V1	28	DN 80	1126	1460	152	1022	630	1135	438	497	210	281	GD
3	CRIE 15-1	1.5	●	V1	9.3	DN 100	749	1460	152	1410	-	1155	438	497	210	227	GA
	CRIE 15-2	3	●	V1	17.7	DN 100	814	1460	152	1410	-	1155	438	497	210	254	GA
	CRIE 15-3	4	●	V1	22.9	DN 100	859	1460	152	1630	-	1155	438	497	210	277	GA
	CRIE 15-4	5.5	●	V1	30.7	DN 100	967	1460	152	1630	-	1155	438	497	210	343	GA
	CRIE 15-5	7.5	●	V1	41.7	DN 100	1036	1460	152	1522	630	1155	438	497	210	388	GD
	CRIE 15-7 [11]	7.5	●	V1	41.7	DN 100	1126	1460	152	1522	630	1155	438	497	210	397	GD
4	CRIE 15-1	1.5	●	V1	12.1	DN 100	749	1460	152	1730	-	1155	438	497	210	285	GA
	CRIE 15-2	3	●	V1	23.3	DN 100	814	1460	152	1730	-	1155	438	497	210	321	GA
	CRIE 15-3	4	●	V1	30.3	DN 100	859	1460	152	1950	-	1155	438	497	210	349	GA
	CRIE 15-4	5.5	●	V1	40.6	DN 100	967	1460	152	1950	-	1155	438	497	210	438	GA
	CRIE 15-5	7.5	●	V1	55.3	DN 100	1036	1460	152	2022	630	1155	438	497	210	497	GD
	CRIE 15-7 [11]	7.5	●	V1	55.3	DN 100	1126	1460	152	2022	630	1155	438	497	210	509	GD
5	CRIE 15-1	1.5	●	V1	14.9	DN 150	749	1460	152	1704	630	1220	438	497	210	389	GD
	CRIE 15-2	3	●	V1	29	DN 150	814	1460	152	1704	630	1220	438	497	210	434	GD
	CRIE 15-3	4	●	V1	37.7	DN 150	859	1460	152	1704	630	1220	438	497	210	456	GD
	CRIE 15-4	5.5	●	V1	50.6	DN 150	967	1460	152	1704	630	1220	438	497	210	567	GD
	CRIE 15-5	7.5	●	V1	68.9	DN 150	1036	1460	152	2524	630	1220	438	497	210	648	GD
	CRIE 15-7 [11]	7.5	●	V1	68.9	DN 150	1126	1460	152	2524	630	1220	438	497	210	663	GD
6	CRIE 15-1	1.5	●	V1	17.7	DN 150	749	1460	152	2024	630	1220	438	497	210	450	GD
	CRIE 15-2	3	●	V1	34.6	DN 150	814	1460	152	2024	630	1220	438	497	210	504	GD
	CRIE 15-3	4	●	V1	45	DN 150	859	1460	152	2024	630	1220	438	497	210	530	GD
	CRIE 15-4	5.5	●	V1	60.5	DN 150	967	1460	152	2024	630	1220	438	497	210	664	GD
	CRIE 15-5	7.5	●	V1	82.5	DN 150	1036	1460	152	3024	830	1220	438	497	210	766	GD
	CRIE 15-7 [11]	7.5	●	V1	82.5	DN 150	1126	1460	152	3024	830	1220	438	497	210	784	GD

[11] Pump with undersized motor

Legend

- ● Three-phase motors
- - Not applicable

Explanation

- Motor power is the power per pump.
- Rated current: Additional current applies for the control circuit depending on design.
- Voltage code, V1: 3 × 400 V ± 5 %, 50 Hz, N, PE.
- Design GA: The pumps and the control panel are mounted on the same base frame.
- Design GD: The pumps and the control panel are mounted on their own base frames. The base frames are separated. The control panel can be placed up to 3 meters from the pumps.
- Dimensions may vary by ± 10 mm.

Hydro MPC-E with CRIE 20

Curve charts

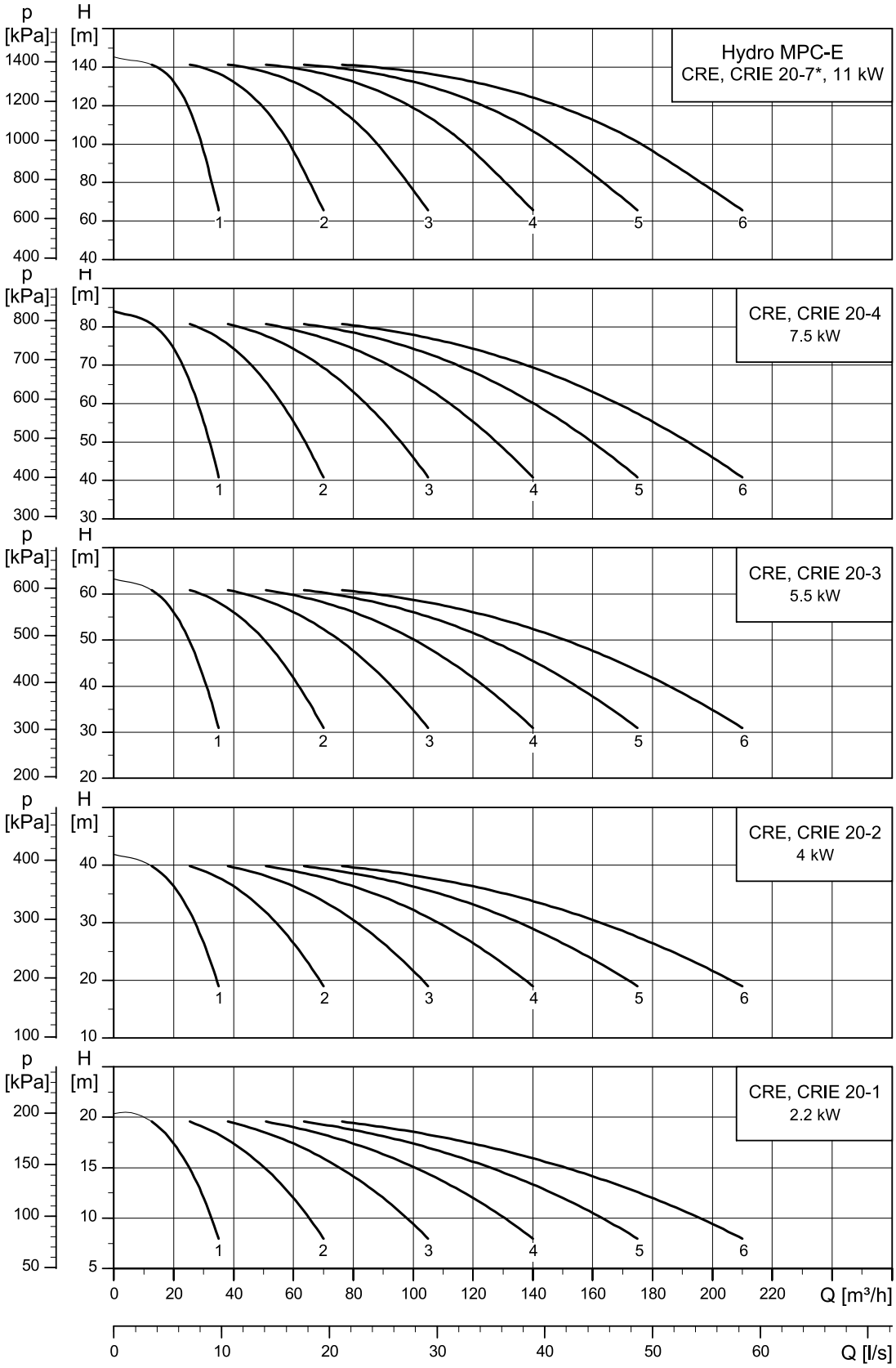

* For undersized motors, the maximum speed depends on the power usage.
Losses in fittings and valves are not included.

Dimensional sketch

Below is the dimensional sketch of a system in different designs. The system is shown as an example. The pumps supplied may differ from the sketch.

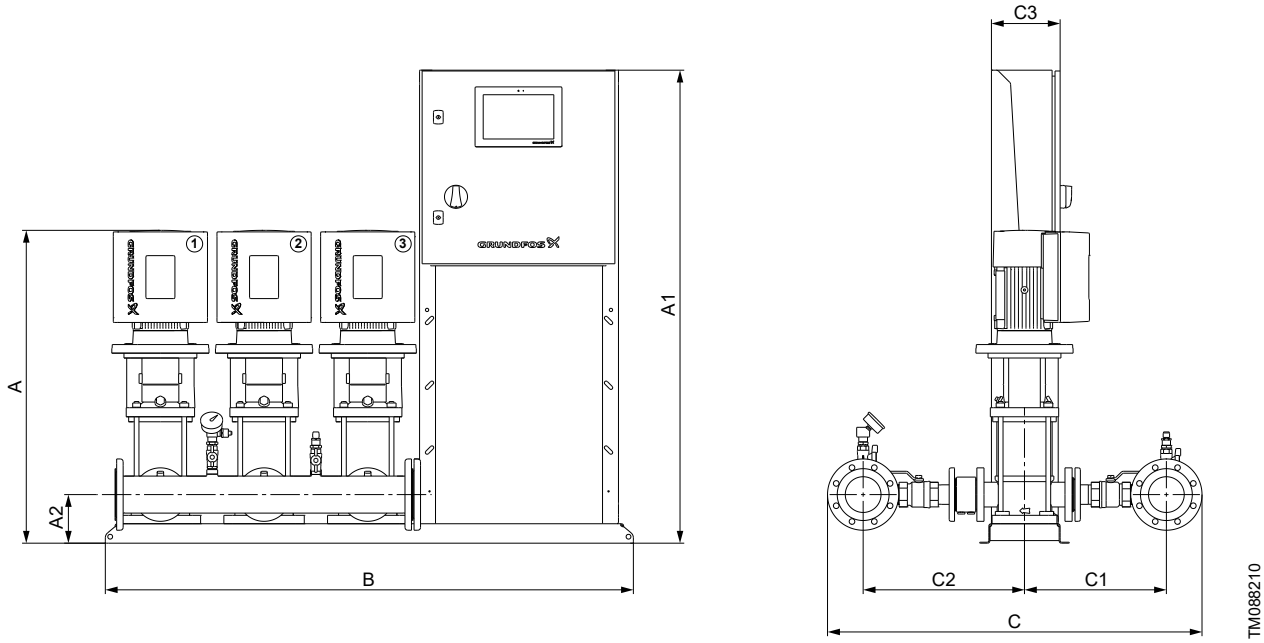

Design GA

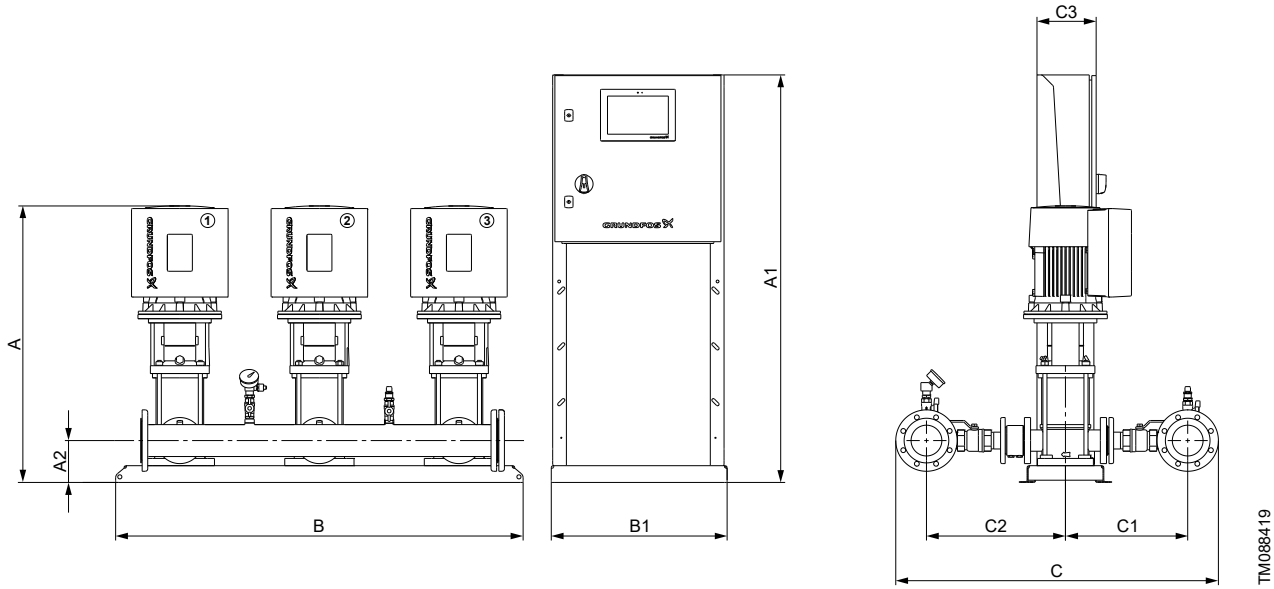

Design GD

Electrical data, dimensions and weights

Number of pumps	Pump type	Motor power [kW]	Motor type	Voltage code	Rated current [A]	Connections	A [mm]	A1 [mm]	A2 [mm]	B [mm]	B1 [mm]	C [mm]	C1 [mm]	C2 [mm]	C3 [mm]	Net weight [kg]	Design
2	CRIE 20-1	2.2	●	V1	8.9	DN 80	749	1460	152	1110	-	1135	438	497	210	168	GA
	CRIE 20-2	4	●	V1	15.5	DN 80	814	1460	152	1110	-	1135	438	497	210	189	GA
	CRIE 20-3	5.5	●	V1	20.7	DN 80	922	1460	152	1110	-	1135	438	497	210	233	GA
	CRIE 20-4	7.5	●	V1	28	DN 80	991	1460	152	1022	630	1135	438	497	210	271	GD
	CRIE 20-7 [12]	11	●	V1	40	DN 80	1260	1460	192	1022	630	1135	438	497	210	331	GD
3	CRIE 20-1	2.2	●	V1	12.9	DN 100	749	1460	152	1630	-	1155	438	497	210	244	GA
	CRIE 20-2	4	●	V1	22.9	DN 100	814	1460	152	1630	-	1155	438	497	210	274	GA
	CRIE 20-3	5.5	●	V1	30.7	DN 100	922	1460	152	1630	-	1155	438	497	210	340	GA
	CRIE 20-4	7.5	●	V1	41.7	DN 100	991	1460	152	1522	630	1155	438	497	210	382	GD
	CRIE 20-7 [12]	11	●	V1	59.5	DN 100	1260	1460	192	1522	630	1155	438	497	210	473	GD
4	CRIE 20-1	2.2	●	V1	16.9	DN 100	749	1460	152	1950	-	1155	438	497	210	305	GA
	CRIE 20-2	4	●	V1	30.3	DN 100	814	1460	152	1950	-	1155	438	497	210	345	GA
	CRIE 20-3	5.5	●	V1	40.6	DN 100	922	1460	152	1950	-	1155	438	497	210	433	GA
	CRIE 20-4	7.5	●	V1	55.3	DN 100	991	1460	152	2022	630	1155	438	497	210	489	GD
	CRIE 20-7 [12]	11	●	V1	79.1	DN 100	1260	1460	192	2022	630	1155	438	497	210	616	GD
5	CRIE 20-1	2.2	●	V1	21	DN 150	749	1460	152	1704	630	1220	438	497	210	399	GD
	CRIE 20-2	4	●	V1	37.7	DN 150	814	1460	152	1704	630	1220	438	497	210	451	GD
	CRIE 20-3	5.5	●	V1	50.6	DN 150	922	1460	152	1704	630	1220	438	497	210	562	GD
	CRIE 20-4	7.5	●	V1	68.9	DN 150	991	1460	152	2524	630	1220	438	497	210	638	GD
	CRIE 20-7 [12]	11	●	V1	98.7	DN 150	1260	1460	192	2524	630	1220	438	497	210	794	GD
6	CRIE 20-1	2.2	●	V1	25	DN 150	749	1460	152	2024	630	1220	438	497	210	462	GD
	CRIE 20-2	4	●	V1	45	DN 150	814	1460	152	2024	630	1220	438	497	210	524	GD
	CRIE 20-3	5.5	●	V1	60.5	DN 150	922	1460	152	2024	630	1220	438	497	210	658	GD
	CRIE 20-4	7.5	●	V1	82.5	DN 150	991	1460	152	3024	830	1220	438	497	210	754	GD
	CRIE 20-7 [12]	11	●	V1	118.3	DN 150	1260	1460	192	3024	830	1220	438	497	210	934	GD

[12] Pump with undersized motor

Legend

- ● Three-phase motors
- - Not applicable

Explanation

- Motor power is the power per pump.
- Rated current: Additional current applies for the control circuit depending on design.
- Voltage code, V1: 3 × 400 V ± 5 %, 50 Hz, N, PE.
- Design GA: The pumps and the control panel are mounted on the same base frame.
- Design GD: The pumps and the control panel are mounted on their own base frames. The base frames are separated. The control panel can be placed up to 3 meters from the pumps.
- Dimensions may vary by ± 10 mm.

Hydro MPC-E with CRE 32

Curve charts

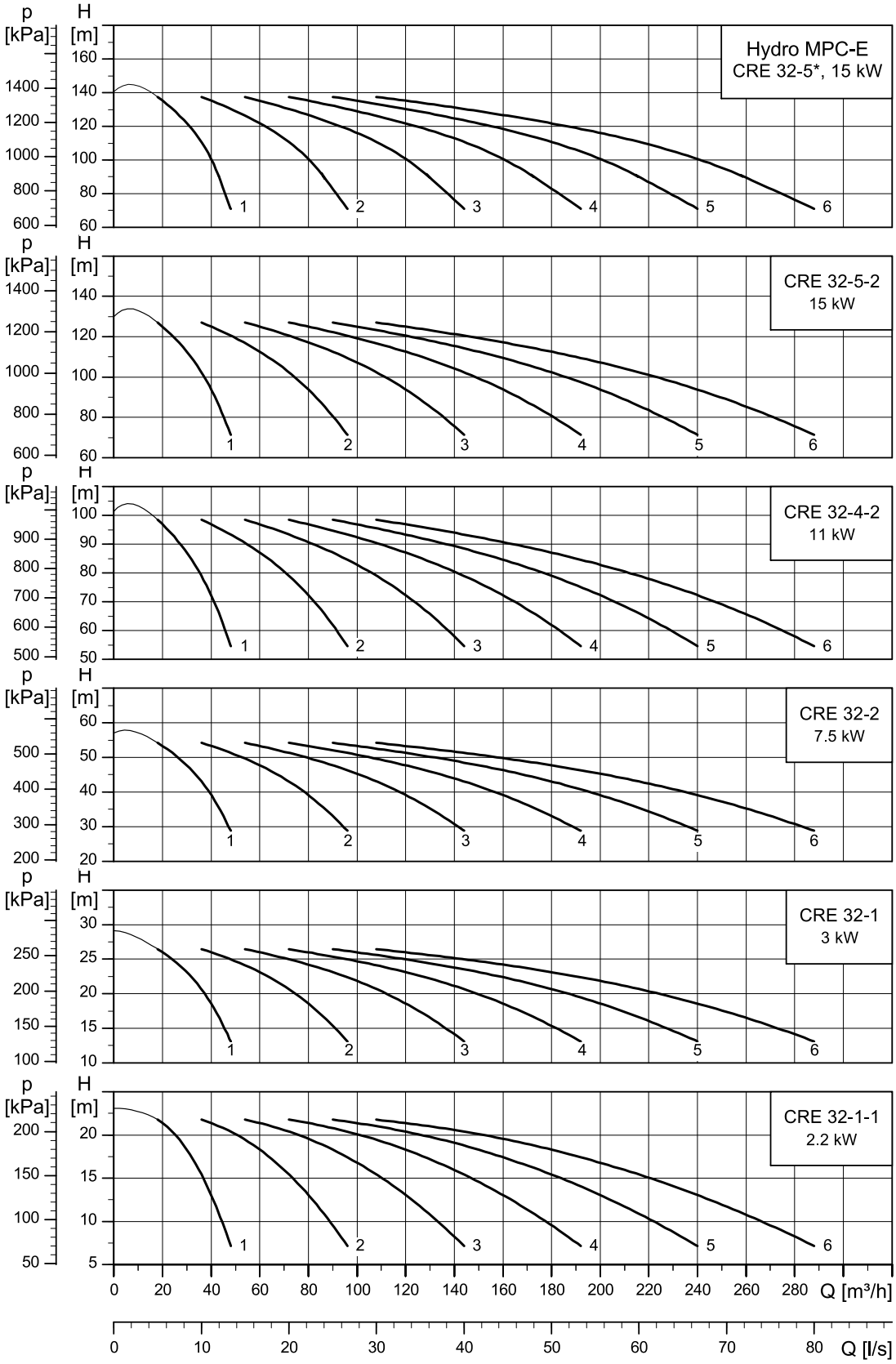

* For undersized motors, the maximum speed depends on the power usage.
Losses in fittings and valves are not included.

Dimensional sketch

Below is the dimensional sketch of a system in different designs. The system is shown as an example. The pumps supplied may differ from the sketch.

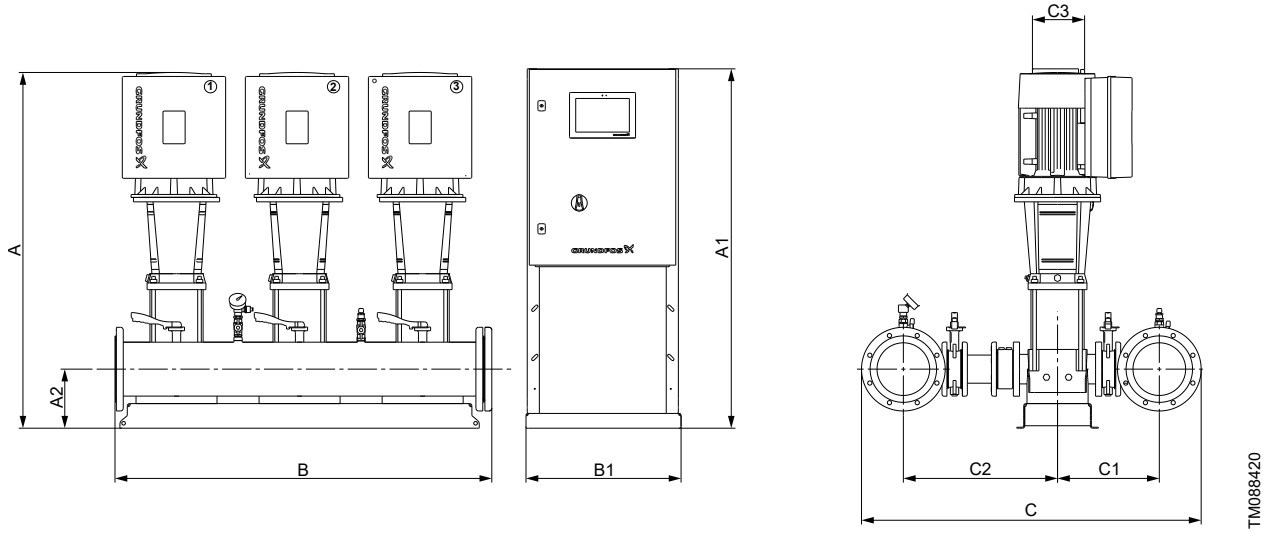

Design GD

Electrical data, dimensions and weights

Number of pumps	Pump type	Motor power [kW]	Motor type	Voltage code	Rated current [A]	Connections	A [mm]	A1 [mm]	A2 [mm]	B [mm]	B1 [mm]	C [mm]	C1 [mm]	C2 [mm]	C3 [mm]	Net weight [kg]	Design
2	CRE 32-1-1	2.2	●	V1	8.9	DN 100	841	1460	167	1022	410	1180	379	579	210	234	GD
	CRE 32-1	3	●	V1	12.1	DN 100	901	1460	167	1022	410	1180	379	579	210	246	GD
	CRE 32-2	7.5	●	V1	28	DN 100	1026	1460	167	1022	630	1180	379	579	210	307	GD
	CRE 32-4-2	11	●	V1	40	DN 100	1333	1460	207	1022	630	1180	379	579	210	378	GD
	CRE 32-5-2	15	●	V1	52.3	DN 100	1479	1460	207	1022	630	1180	379	579	210	436	GD
	CRE 32-5 [13]	15	●	V1	52.3	DN 100	1479	1460	207	1022	630	1180	379	579	210	436	GD
3	CRE 32-1-1	2.2	●	V1	12.9	DN 150	841	1460	167	1524	630	1245	379	579	210	360	GD
	CRE 32-1	3	●	V1	17.7	DN 150	901	1460	167	1524	410	1245	379	579	210	366	GD
	CRE 32-2	7.5	●	V1	41.7	DN 150	1026	1460	167	1524	630	1245	379	579	210	451	GD
	CRE 32-4-2	11	●	V1	59.5	DN 150	1333	1460	207	1524	630	1245	379	579	210	560	GD
	CRE 32-5-2	15	●	V1	78.1	DN 150	1479	1460	207	1524	630	1245	379	579	210	653	GD
	CRE 32-5 [13]	15	●	V1	78.1	DN 150	1479	1460	207	1524	630	1245	379	579	210	653	GD
4	CRE 32-1-1	2.2	●	V1	16.9	DN 150	841	1460	167	2024	630	1245	379	579	210	453	GD
	CRE 32-1	3	●	V1	23.3	DN 150	901	1460	167	2024	410	1245	379	579	210	465	GD
	CRE 32-2	7.5	●	V1	55.3	DN 150	1026	1460	167	2024	630	1245	379	579	210	576	GD
	CRE 32-4-2	11	●	V1	79.1	DN 150	1333	1460	207	2024	630	1245	379	579	210	726	GD
	CRE 32-5-2	15	●	V1	103.8	DN 150	1479	1460	207	2024	830	1245	379	579	210	844	GD
	CRE 32-5 [13]	15	●	V1	103.8	DN 150	1479	1460	207	2024	830	1245	379	579	210	844	GD
5	CRE 32-1-1	2.2	●	V1	21	DN 150	841	1460	167	2524	630	1245	379	579	210	559	GD
	CRE 32-1	3	●	V1	29	DN 150	901	1460	167	2524	630	1245	379	579	210	590	GD
	CRE 32-2	7.5	●	V1	68.9	DN 150	1026	1460	167	2524	630	1245	379	579	210	714	GD
	CRE 32-4-2	11	●	V1	98.7	DN 150	1333	1460	207	2524	630	1245	379	579	210	898	GD
	CRE 32-5-2	15	●	V1	129.6	DN 150	1479	1460	207	2524	830	1245	379	579	300	1060	GD
	CRE 32-5 [13]	15	●	V1	129.6	DN 150	1479	1460	207	2524	830	1245	379	579	300	1060	GD
6	CRE 32-1-1	2.2	●	V1	25	DN 150	841	1460	167	3024	630	1245	379	579	210	653	GD
	CRE 32-1	3	●	V1	34.6	DN 150	901	1460	167	3024	630	1245	379	579	210	690	GD
	CRE 32-2	7.5	●	V1	82.5	DN 150	1026	1460	167	3024	830	1245	379	579	210	845	GD
	CRE 32-4-2	11	●	V1	118.3	DN 150	1333	1460	207	3024	830	1245	379	579	210	1059	GD
	CRE 32-5-2	15	●	V1	155.4	DN 150	1479	1460	207	3024	830	1245	379	579	300	1250	GD
	CRE 32-5 [13]	15	●	V1	155.4	DN 150	1479	1460	207	3024	830	1245	379	579	300	1250	GD

[13] Pump with undersized motor

Legend

- ● Three-phase motors

Explanation

- Motor power is the power per pump.
- Rated current: Additional current applies for the control circuit depending on design.
- Voltage code, V1: 3 × 400 V ± 5 %, 50 Hz, N, PE.
- Design GD: The pumps and the control panel are mounted on their own base frames. The base frames are separated. The control panel can be placed up to 3 meters from the pumps.
- Dimensions may vary by ± 10 mm.

Hydro MPC-E with CRE 45

Curve charts

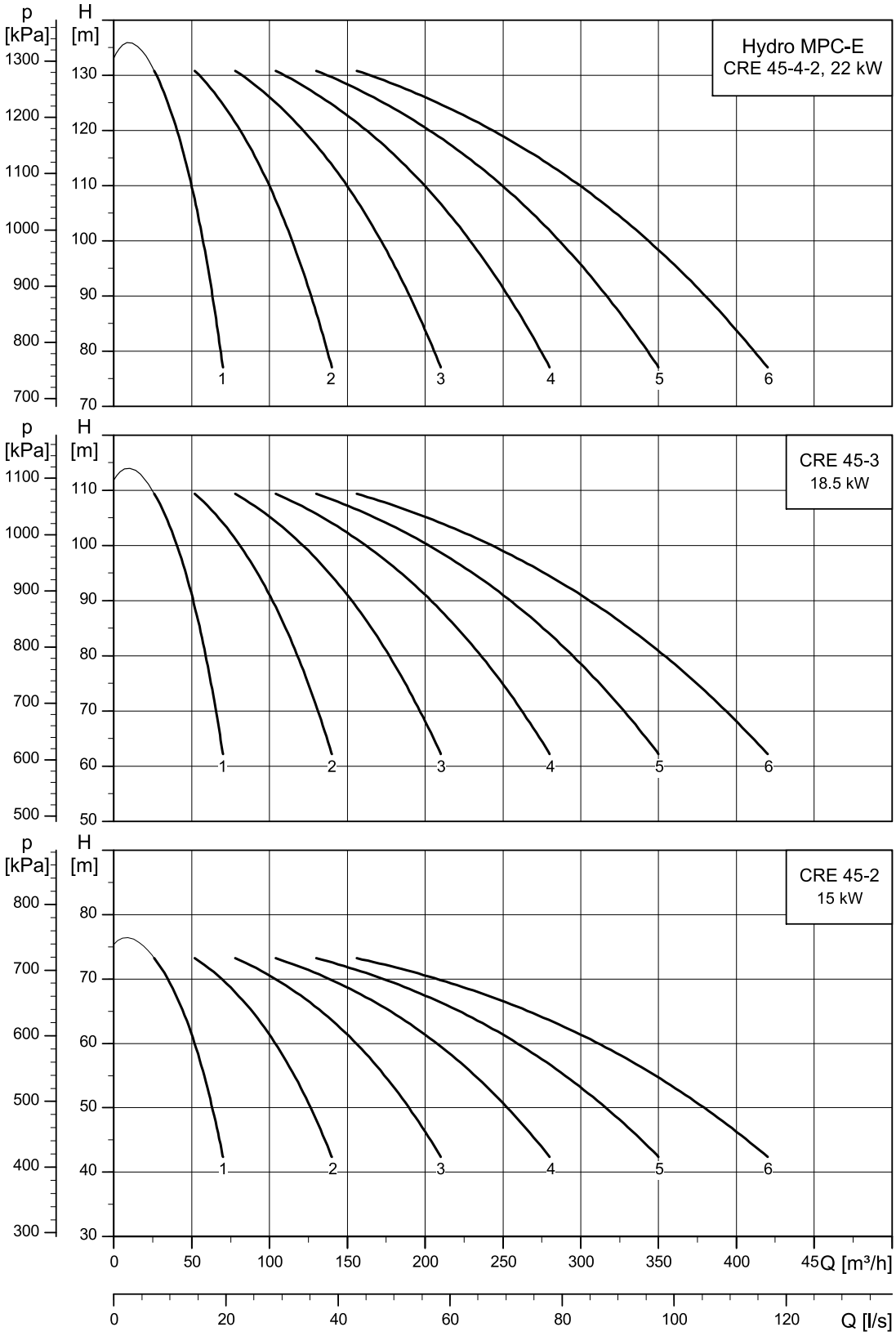

Losses in fittings and valves are not included.

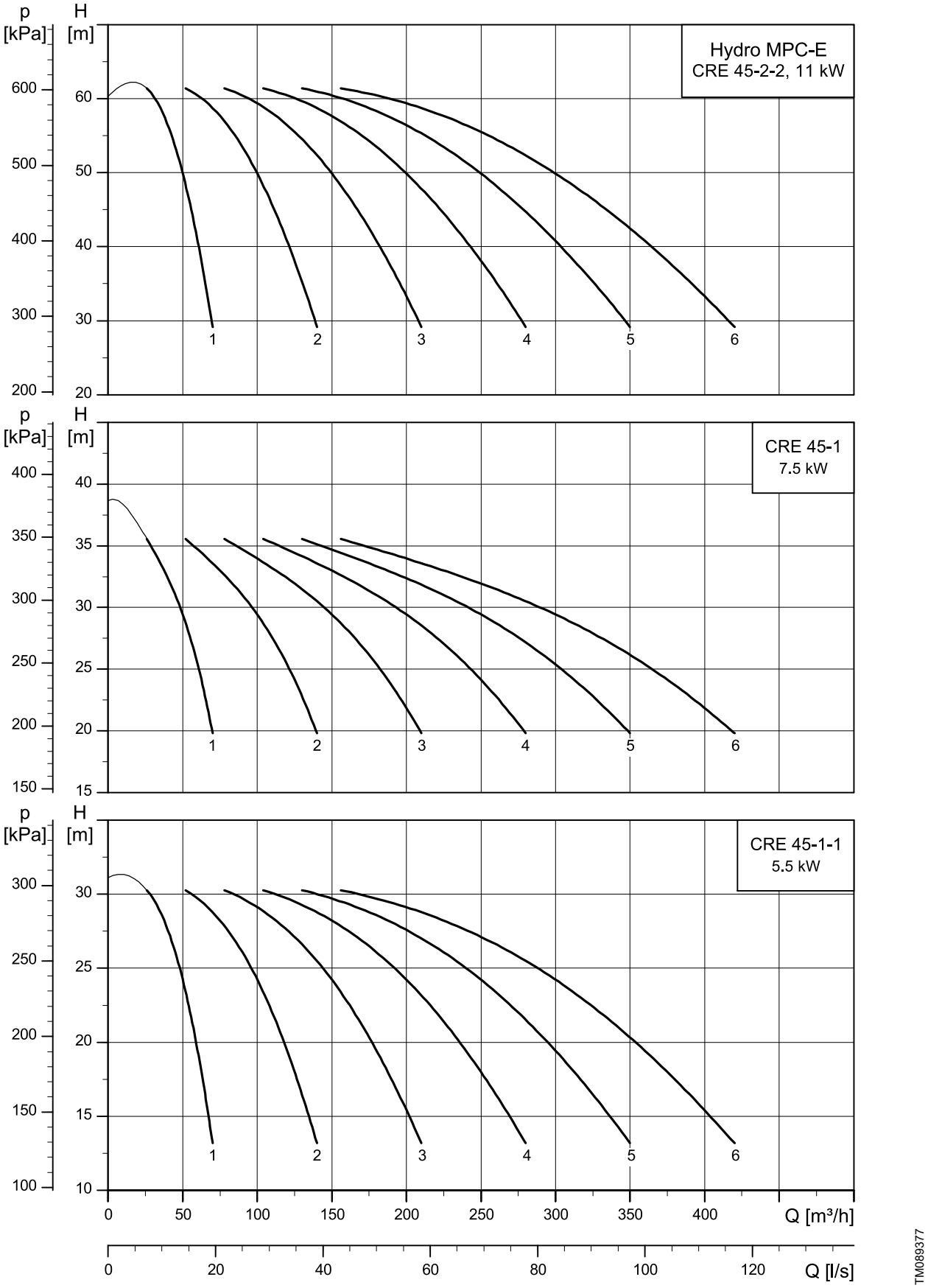

Losses in fittings and valves are not included.

Dimensional sketch

Below is the dimensional sketch of a system in different designs. The system is shown as an example. The pumps supplied may differ from the sketch.

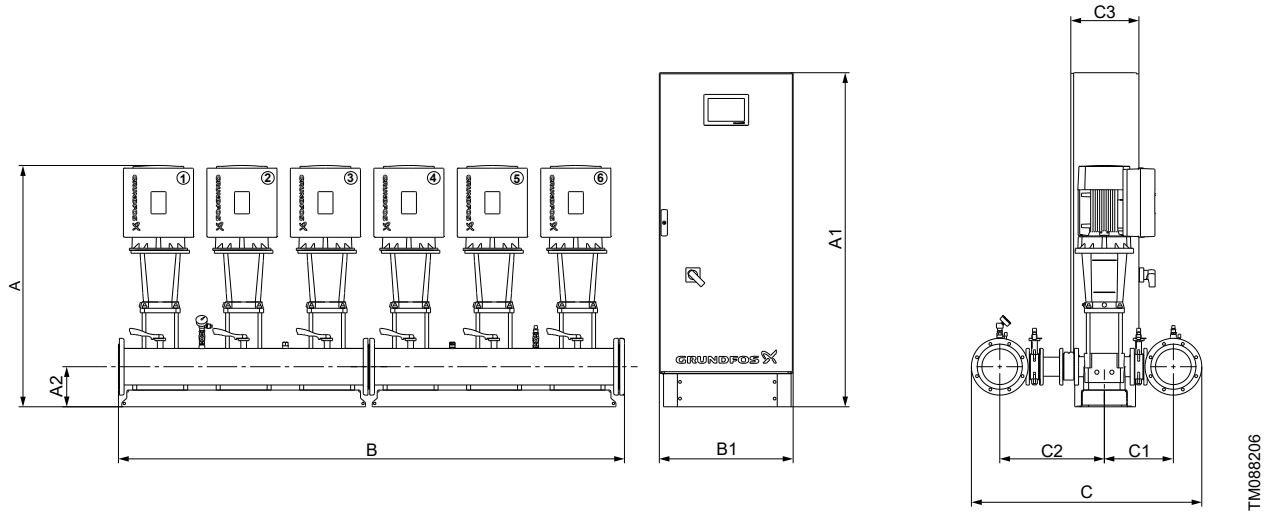

Design GC

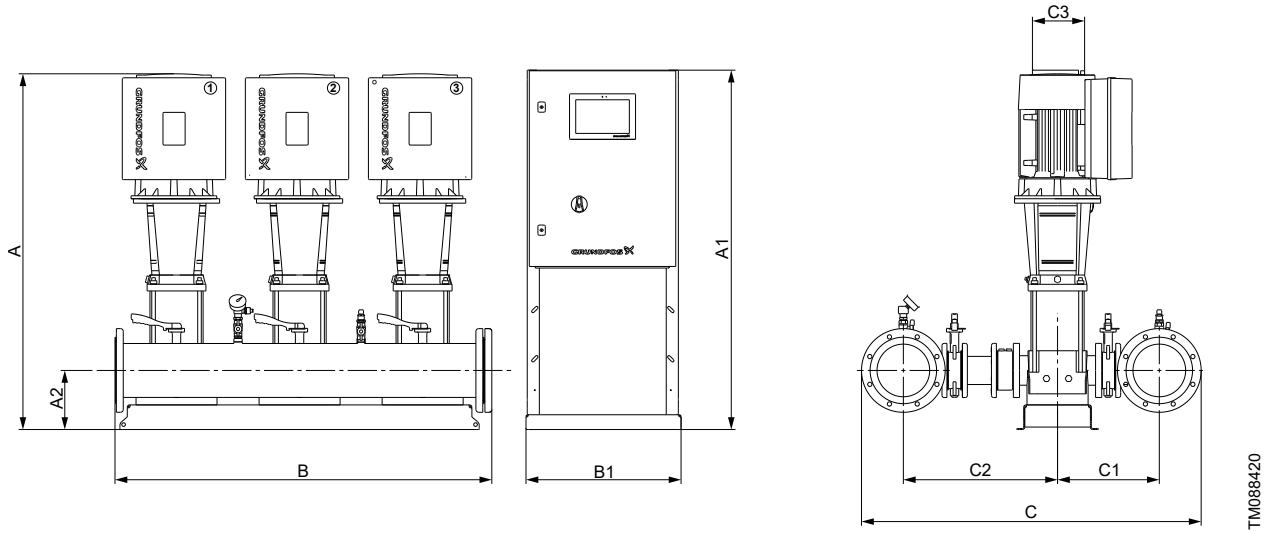

Design GD

Electrical data, dimensions and weights

Number of pumps	Pump type	Motor power [kW]	Motor type	Voltage code	Rated current [A]	Connections	A [mm]	A1 [mm]	A2 [mm]	B [mm]	B1 [mm]	C [mm]	C1 [mm]	C2 [mm]	C3 [mm]	Net weight [kg]	Design
2	CRE 45-1-1	5.5	●	V1	20.7	DN 150	986	1460	202	1024	410	1335	419	629	210	328	GD
	CRE 45-1	7.5	●	V1	28	DN 150	1010	1460	202	1024	630	1335	419	629	210	354	GD
	CRE 45-2-2	11	●	V1	40	DN 150	1257	1460	242	1024	630	1335	419	629	210	420	GD
	CRE 45-2	15	●	V1	52.3	DN 150	1333	1460	242	1024	630	1335	419	629	210	472	GD
	CRE 45-3	18.5	●	V1	64.7	DN 150	1413	1460	242	1024	630	1335	419	629	210	490	GD
	CRE 45-4-2	22	●	V1	76.1	DN 150	1519	1460	242	1024	630	1335	419	629	210	537	GD
3	CRE 45-1-1	5.5	●	V1	30.7	DN 200	986	1460	202	1526	630	1390	419	629	210	491	GD
	CRE 45-1	7.5	●	V1	41.7	DN 200	1010	1460	202	1526	630	1390	419	629	210	510	GD
	CRE 45-2-2	11	●	V1	59.5	DN 200	1257	1460	242	1526	630	1390	419	629	210	611	GD
	CRE 45-2	15	●	V1	78.1	DN 200	1333	1460	242	1526	630	1390	419	629	210	695	GD
	CRE 45-3	18.5	●	V1	96.7	DN 200	1413	1460	242	1526	630	1390	419	629	210	723	GD
	CRE 45-4-2	22	●	V1	113.8	DN 200	1519	1460	242	1526	630	1390	419	629	210	782	GD
4	CRE 45-1-1	5.5	●	V1	40.6	DN 200	986	1460	202	2026	630	1390	419	629	210	623	GD
	CRE 45-1	7.5	●	V1	55.3	DN 200	1010	1460	202	2026	630	1390	419	629	210	651	GD
	CRE 45-2-2	11	●	V1	79.1	DN 200	1257	1460	242	2026	630	1390	419	629	210	790	GD
	CRE 45-2	15	●	V1	103.8	DN 200	1333	1460	242	2026	830	1390	419	629	210	895	GD
	CRE 45-3	18.5	●	V1	128.6	DN 200	1413	1460	242	2026	830	1390	419	629	300	948	GD
	CRE 45-4-2	22	●	V1	151.4	DN 200	1519	1460	242	2026	830	1390	419	629	300	1027	GD
5	CRE 45-1-1	5.5	●	V1	50.6	DN 200	986	1460	202	2526	630	1390	419	629	210	773	GD
	CRE 45-1	7.5	●	V1	68.9	DN 200	1010	1460	202	2526	630	1390	419	629	210	807	GD
	CRE 45-2-2	11	●	V1	98.7	DN 200	1257	1460	242	2526	630	1390	419	629	210	978	GD
	CRE 45-2	15	●	V1	129.6	DN 200	1333	1460	242	2526	830	1390	419	629	300	1125	GD
	CRE 45-3	18.5	●	V1	160.6	DN 200	1413	1460	242	2526	830	1390	419	629	300	1171	GD
	CRE 45-4-2	22	●	V1	189.1	DN 200	1519	1460	242	2526	830	1390	419	629	300	1274	GD
6	CRE 45-1-1	5.5	●	V1	60.5	DN 200	986	1460	202	3026	630	1390	419	629	210	906	GD
	CRE 45-1	7.5	●	V1	82.5	DN 200	1010	1460	202	3026	830	1390	419	629	210	954	GD
	CRE 45-2-2	11	●	V1	118.3	DN 200	1257	1460	242	3026	830	1390	419	629	210	1153	GD
	CRE 45-2	15	●	V1	155.4	DN 200	1333	1460	242	3026	830	1390	419	629	300	1324	GD
	CRE 45-3	18.5	●	V1	192.6	DN 200	1413	1460	242	3026	830	1390	419	629	300	1384	GD
	CRE 45-4-2	22	●	V1	226.8	DN 200	1519	1700	242	3026	800	1390	419	629	400	1597	GC

Legend

- ● Three-phase motors

Explanation

- Motor power is the power per pump.
- Rated current: Additional current applies for the control circuit depending on design.
- Voltage code, V1: 3 × 400 V ± 5 %, 50 Hz, N, PE.
- Design GC: The pumps and the control panel are mounted on their own base frames. The base frames are separated. The control panel is for floor mounting and can be placed up to 3 meters from the pumps.
- Design GD: The pumps and the control panel are mounted on their own base frames. The base frames are separated. The control panel can be placed up to 3 meters from the pumps.
- Dimensions may vary by ± 10 mm.

Hydro MPC-E with CRE 64

Curve charts

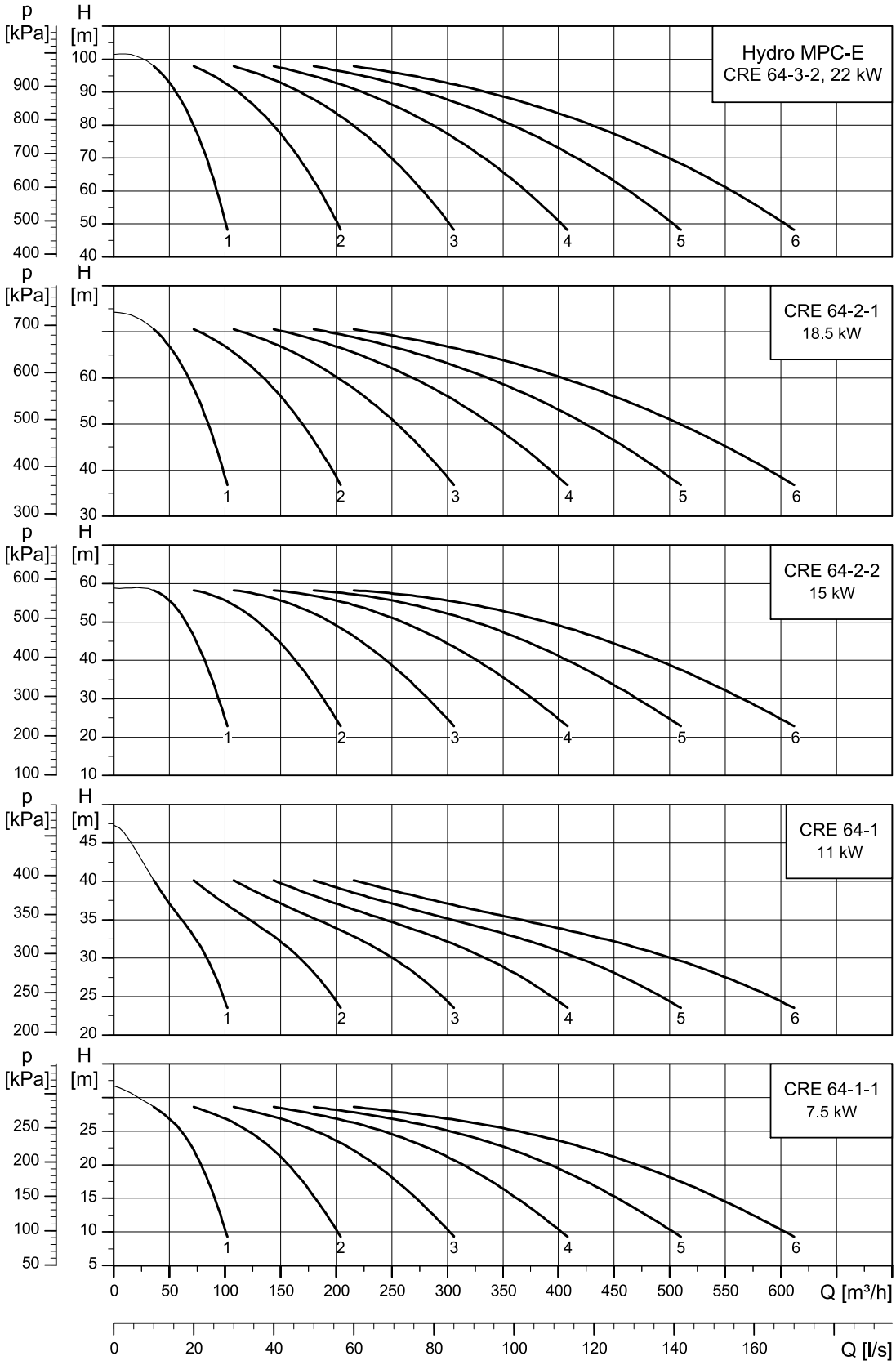

Losses in fittings and valves are not included.

Dimensional sketch

Below is the dimensional sketch of a system in different designs. The system is shown as an example. The pumps supplied may differ from the sketch.

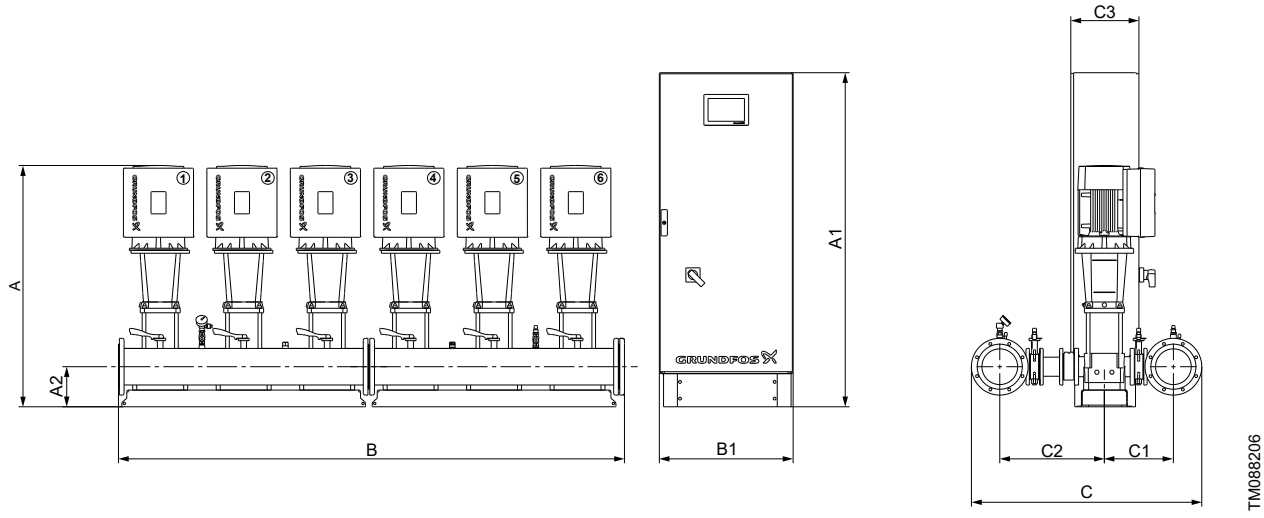

Design GC

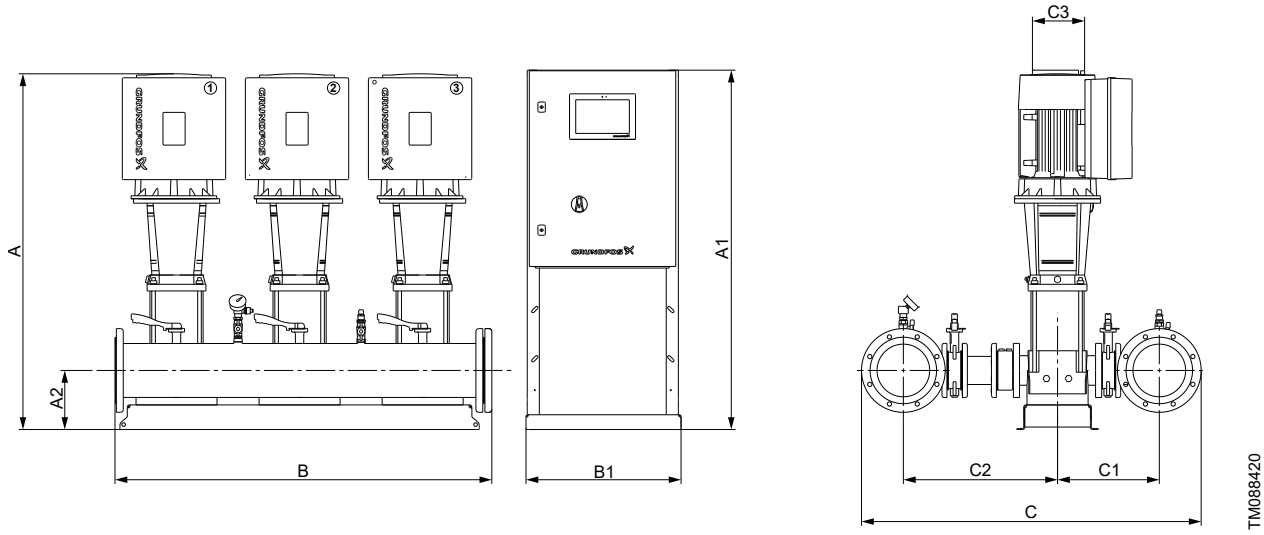

Design GD

Electrical data, dimensions and weights

Number of pumps	Pump type	Motor power [kW]	Motor type	Voltage code	Rated current [A]	Connections	A [mm]	A1 [mm]	A2 [mm]	B [mm]	B1 [mm]	C [mm]	C1 [mm]	C2 [mm]	C3 [mm]	Net weight [kg]	Design
2	CRE 64-1-1	7.5	●	V1	28	DN 150	1012	1460	202	1024	630	1335	421	631	210	360	GD
	CRE 64-1	11	●	V1	40	DN 150	1179	1460	242	1024	630	1335	421	631	210	419	GD
	CRE 64-2-2	15	●	V1	52.3	DN 150	1338	1460	242	1024	630	1335	421	631	210	479	GD
	CRE 64-2-1	18.5	●	V1	64.7	DN 150	1338	1460	242	1024	630	1335	421	631	210	490	GD
	CRE 64-3-2	22	●	V1	76.1	DN 150	1446	1460	242	1024	630	1335	421	631	210	538	GD
3	CRE 64-1-1	7.5	●	V1	41.7	DN 200	1012	1460	202	1526	630	1390	421	631	210	519	GD
	CRE 64-1	11	●	V1	59.5	DN 200	1179	1460	242	1526	630	1390	421	631	210	608	GD
	CRE 64-2-2	15	●	V1	78.1	DN 200	1338	1460	242	1526	630	1390	421	631	210	705	GD
	CRE 64-2-1	18.5	●	V1	96.7	DN 200	1338	1460	242	1526	630	1390	421	631	210	722	GD
	CRE 64-3-2	22	●	V1	113.8	DN 200	1446	1460	242	1526	630	1390	421	631	210	783	GD
4	CRE 64-1-1	7.5	●	V1	55.3	DN 200	1012	1460	202	2026	630	1390	421	631	210	662	GD
	CRE 64-1	11	●	V1	79.1	DN 200	1179	1460	242	2026	630	1390	421	631	210	787	GD
	CRE 64-2-2	15	●	V1	103.8	DN 200	1338	1460	242	2026	830	1390	421	631	210	910	GD
	CRE 64-2-1	18.5	●	V1	128.6	DN 200	1338	1460	242	2026	830	1390	421	631	300	947	GD
	CRE 64-3-2	22	●	V1	151.4	DN 200	1446	1460	242	2026	830	1390	421	631	300	1028	GD
5	CRE 64-1-1	7.5	●	V1	68.9	DN 200	1012	1460	202	2526	630	1390	421	631	210	821	GD
	CRE 64-1	11	●	V1	98.7	DN 200	1179	1460	242	2526	630	1390	421	631	210	974	GD
	CRE 64-2-2	15	●	V1	129.6	DN 200	1338	1460	242	2526	830	1390	421	631	300	1143	GD
	CRE 64-2-1	18.5	●	V1	160.6	DN 200	1338	1460	242	2526	830	1390	421	631	300	1169	GD
	CRE 64-3-2	22	●	V1	189.1	DN 200	1446	1460	242	2526	830	1390	421	631	300	1276	GD
6	CRE 64-1-1	7.5	●	V1	82.5	DN 200	1012	1460	202	3026	830	1390	421	631	210	971	GD
	CRE 64-1	11	●	V1	118.3	DN 200	1179	1460	242	3026	830	1390	421	631	210	1147	GD
	CRE 64-2-2	15	●	V1	155.4	DN 200	1338	1460	242	3026	830	1390	421	631	300	1346	GD
	CRE 64-2-1	18.5	●	V1	192.6	DN 200	1338	1460	242	3026	830	1390	421	631	300	1382	GD
	CRE 64-3-2	22	●	V1	226.8	DN 200	1446	1700	242	3026	800	1390	421	631	400	1599	GC

Legend

- ● Three-phase motors

Explanation

- Motor power is the power per pump.
- Rated current: Additional current applies for the control circuit depending on design.
- Voltage code, V1: 3 × 400 V ± 5 %, 50 Hz, N, PE.
- Design GC: The pumps and the control panel are mounted on their own base frames. The base frames are separated. The control panel is for floor mounting and can be placed up to 3 meters from the pumps.
- Design GD: The pumps and the control panel are mounted on their own base frames. The base frames are separated. The control panel can be placed up to 3 meters from the pumps.
- Dimensions may vary by ± 10 mm.

Hydro MPC-EC with CR 64

Curve charts

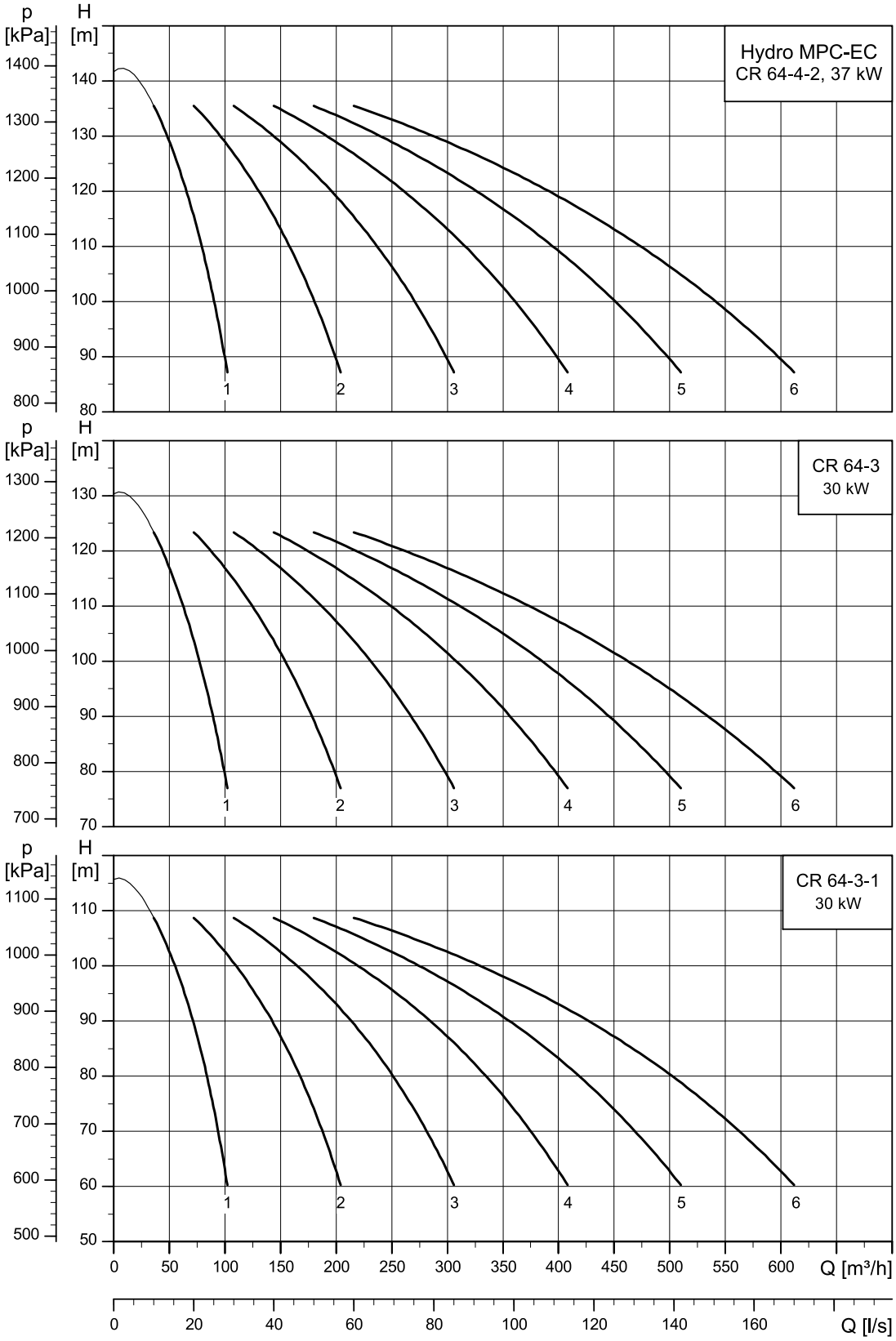

Losses in fittings and valves are not included.

Dimensional sketch

Below is the dimensional sketch of a system in different designs. The system is shown as an example. The pumps supplied may differ from the sketch.

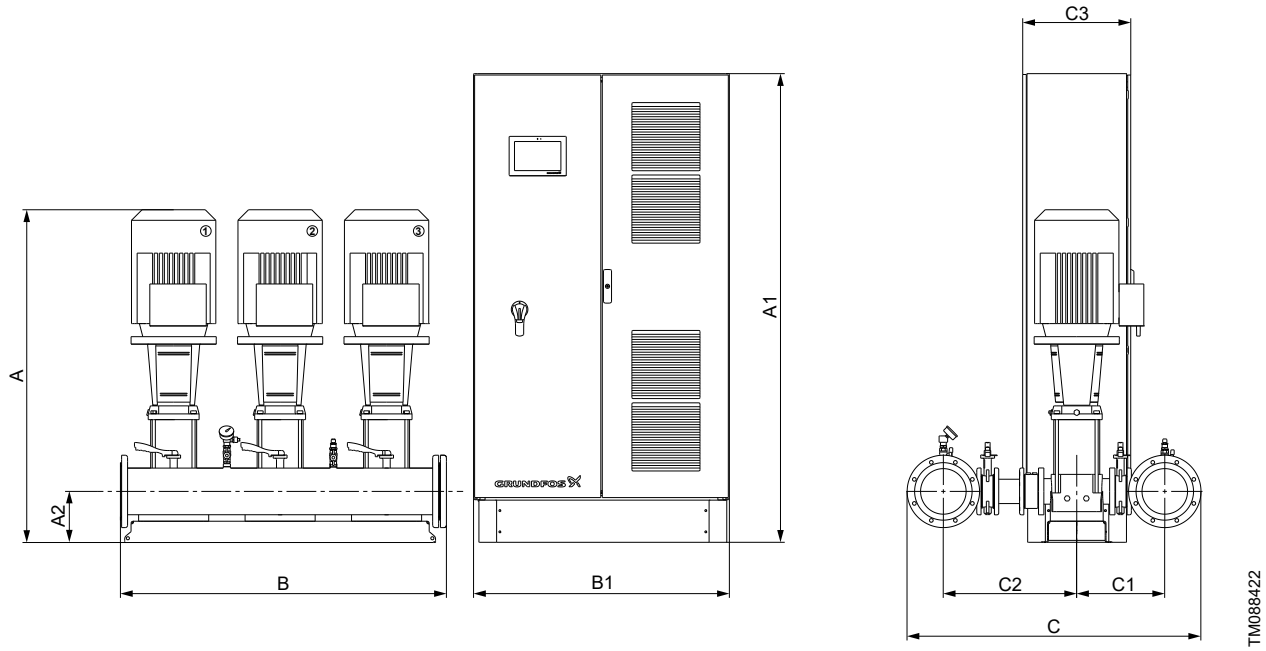

Design GC

Electrical data, dimensions and weights

Number of pumps	Pump type	Motor power [kW]	Motor type	Voltage code	Rated current [A]	Connections	A [mm]	A1 [mm]	A2 [mm]	B [mm]	B1 [mm]	C [mm]	C1 [mm]	C2 [mm]	C3 [mm]	Net weight [kg]	Design
2	CR 64-3-1	30	●	V1	110.8	DN 150	1549	2000	242	1024	1000	1335	421	631	400	1018	GC
	CR 64-3	30	●	V1	110.8	DN 150	1549	2000	242	1024	1000	1335	421	631	400	1018	GC
	CR 64-4-2	37	●	V1	132.8	DN 150	1657	2200	242	1024	1200	1335	421	631	400	1137	GC
3	CR 64-3-1	30	●	V1	165.8	DN 200	1549	2200	242	1526	1200	1390	421	631	500	1477	GC
	CR 64-3	30	●	V1	165.8	DN 200	1549	2200	242	1526	1200	1390	421	631	500	1477	GC
	CR 64-4-2	37	●	V1	198.8	DN 200	1657	2200	242	1526	1200	1390	421	631	500	1737	GC
4	CR 64-3-1	30	●	V1	221.2	DN 200	1549	2000	242	2026	2000	1390	421	631	400	2032	GC
	CR 64-3	30	●	V1	221.2	DN 200	1549	2000	242	2026	2000	1390	421	631	400	2032	GC
	CR 64-4-2	37	●	V1	265.2	DN 200	1657	2000	242	2026	2000	1390	421	631	400	2162	GC
5	CR 64-3-1	30	●	V1	276.2	DN 200	1549	2000	242	2526	2400	1390	421	631	400	2444	GC
	CR 64-3	30	●	V1	276.2	DN 200	1549	2000	242	2526	2400	1390	421	631	400	2444	GC
	CR 64-4-2	37	●	V1	331.2	DN 200	1657	2000	242	2526	2400	1390	421	631	400	2605	GC
6	CR 64-3-1	30	●	V1	331.2	DN 200	1549	2000	242	3026	2400	1390	421	631	400	2830	GC
	CR 64-3	30	●	V1	331.2	DN 200	1549	2000	242	3026	2400	1390	421	631	400	2830	GC
	CR 64-4-2	37	●	V1	397.7	DN 200	1657	2000	242	3026	2400	1390	421	631	400	3050	GC

Legend

- ● Three-phase motors

Explanation

- Motor power is the power per pump.
- Rated current: Additional current applies for the control circuit depending on design.
- Voltage code, V1: 3 × 400 V ± 5 %, 50 Hz, N, PE.
- Design GC: The pumps and the control panel are mounted on their own base frames. The base frames are separated. The control panel is for floor mounting and can be placed up to 3 meters from the pumps.
- Dimensions may vary by ± 10 mm.

Hydro MPC-E with CRE 95

Curve charts

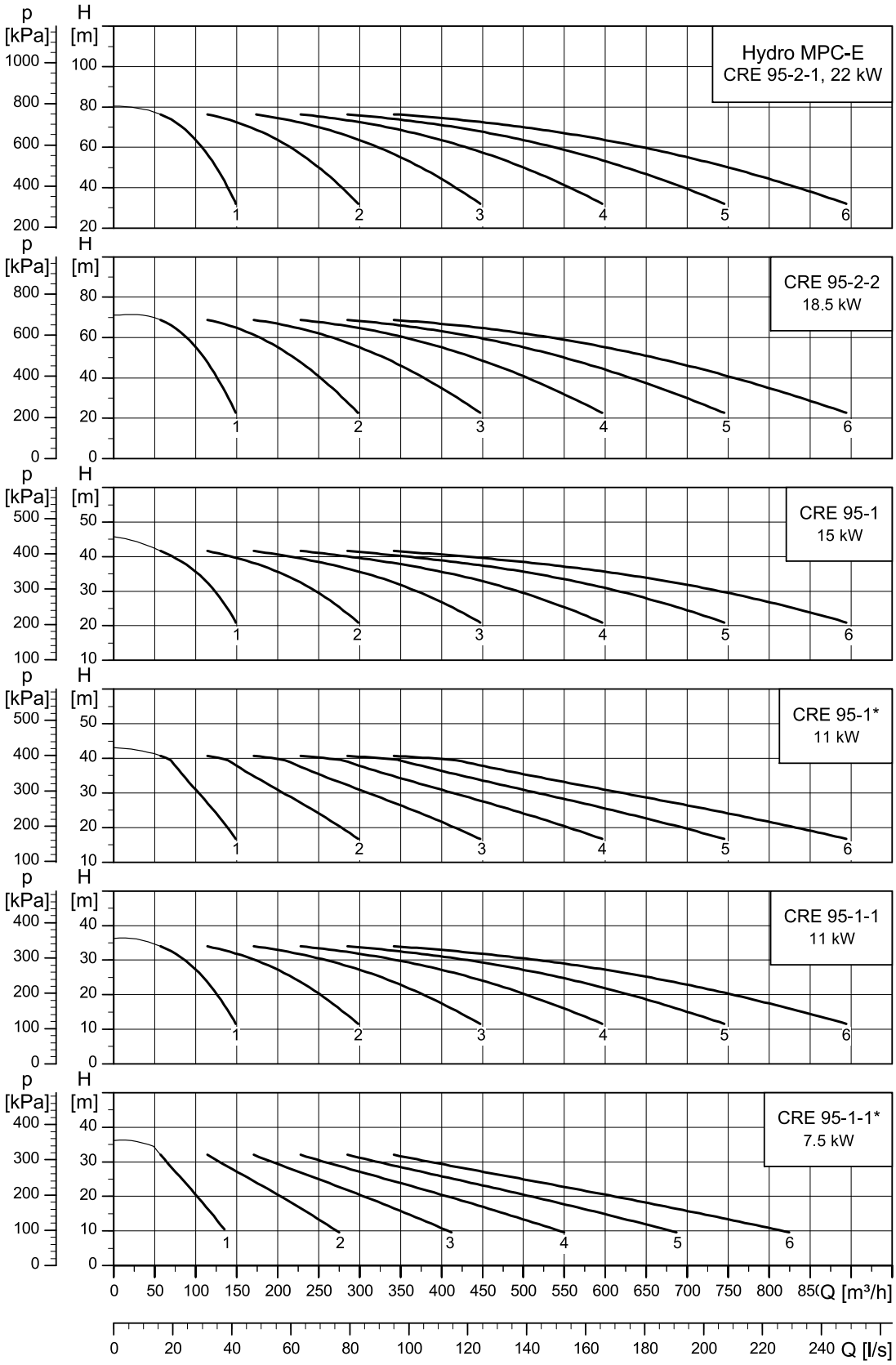

* For undersized motors, the maximum speed depends on the power usage.
Losses in fittings and valves are not included.

Dimensional sketch

Below is the dimensional sketch of a system in different designs. The system is shown as an example. The pumps supplied may differ from the sketch.

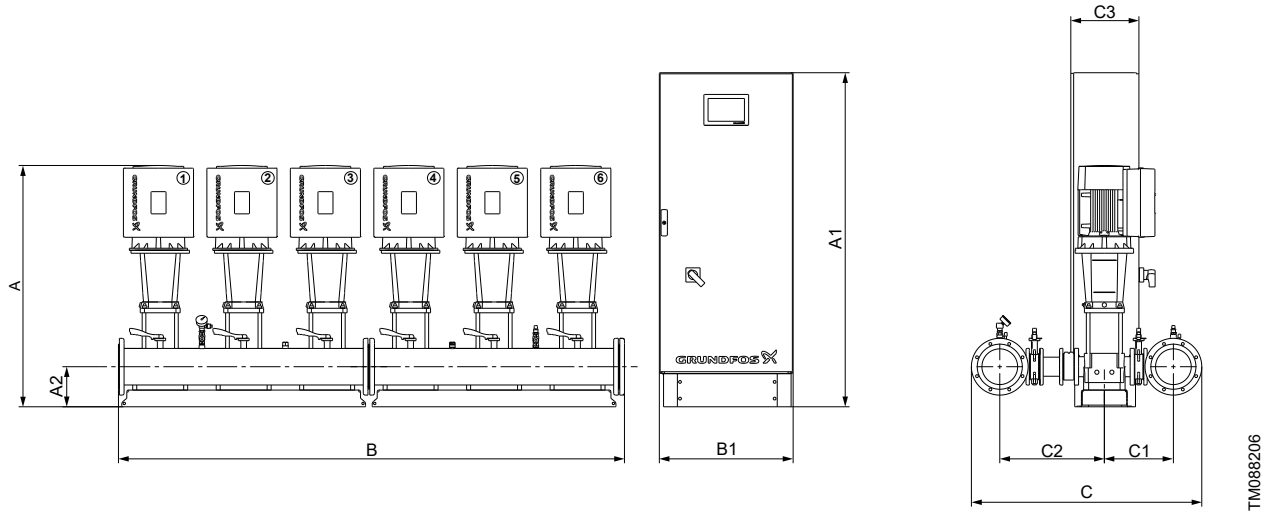

Design GC

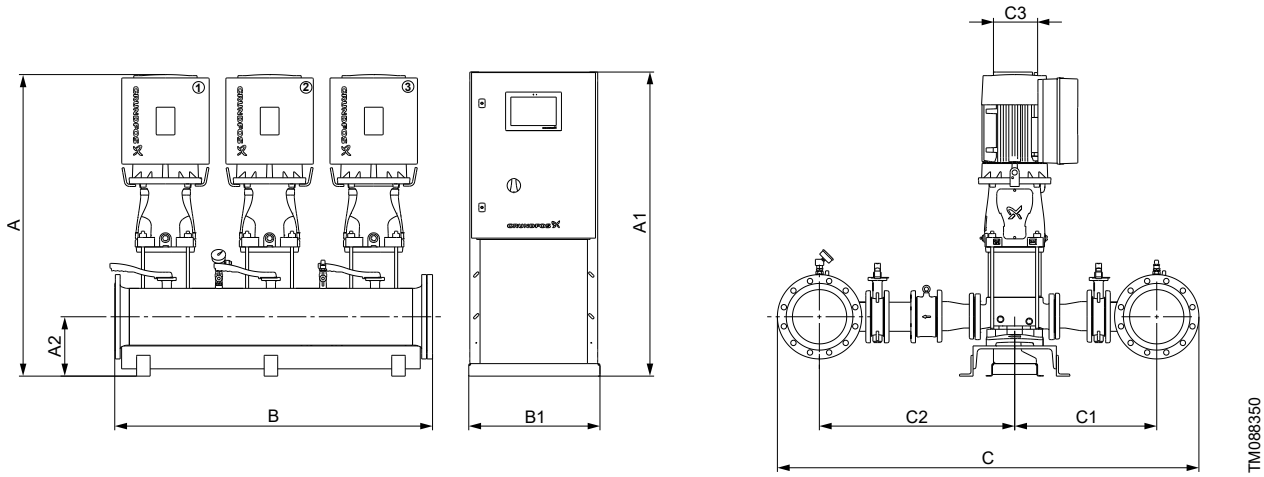

Design GD

Electrical data, dimensions and weights

Number of pumps	Pump type	Motor power [kW]	Motor type	Voltage code	Rated current [A]	Connections	A [mm]	A1 [mm]	A2 [mm]	B [mm]	B1 [mm]	C [mm]	C1 [mm]	C2 [mm]	C3 [mm]	Net weight [kg]	Design
2	CRE 95-1-1 [14]	7.5	●	V1	28	DN 200	1225	1460	287	1026	630	1970	690	940	210	559	GD
	CRE 95-1-1	11	●	V1	40	DN 200	1244	1460	287	1026	630	1970	690	940	210	603	GD
	CRE 95-1 [14]	11	●	V1	40	DN 200	1244	1460	287	1026	630	1970	690	940	210	603	GD
	CRE 95-1	15	●	V1	52.3	DN 200	1320	1460	287	1026	630	1970	690	940	210	654	GD
	CRE 95-2-2	18.5	●	V1	64.7	DN 200	1424	1460	287	1026	630	1970	690	940	210	677	GD
	CRE 95-2-1	22	●	V1	76.1	DN 200	1450	1460	287	1026	630	1970	690	940	210	716	GD
3	CRE 95-1-1 [14]	7.5	●	V1	41.7	DN 250	1225	1460	287	1528	630	2035	690	940	210	892	GD
	CRE 95-1-1	11	●	V1	59.5	DN 250	1244	1460	287	1528	630	2035	690	940	210	959	GD
	CRE 95-1 [14]	11	●	V1	59.5	DN 250	1244	1460	287	1528	630	2035	690	940	210	959	GD
	CRE 95-1	15	●	V1	78.1	DN 250	1320	1460	287	1528	630	2035	690	940	210	1042	GD
	CRE 95-2-2	18.5	●	V1	96.7	DN 250	1424	1460	287	1528	630	2035	690	940	210	1077	GD
	CRE 95-2-1	22	●	V1	113.8	DN 250	1450	1460	287	1528	630	2035	690	940	210	1124	GD
4	CRE 95-1-1 [14]	7.5	●	V1	55.3	DN 250	1225	1460	287	2028	630	2035	690	940	210	1133	GD
	CRE 95-1-1	11	●	V1	79.1	DN 250	1244	1460	287	2028	630	2035	690	940	210	1229	GD
	CRE 95-1 [14]	11	●	V1	79.1	DN 250	1244	1460	287	2028	630	2035	690	940	210	1229	GD
	CRE 95-1	15	●	V1	103.8	DN 250	1320	1460	287	2028	830	2035	690	940	210	1334	GD
	CRE 95-2-2	18.5	●	V1	128.6	DN 250	1424	1460	287	2028	830	2035	690	940	300	1395	GD
	CRE 95-2-1	22	●	V1	151.4	DN 250	1450	1460	287	2028	830	2035	690	940	300	1458	GD
5	CRE 95-1-1 [14]	7.5	●	V1	68.9	DN 300	1225	1460	287	2530	630	2090	690	940	210	1504	GD
	CRE 95-1-1	11	●	V1	98.7	DN 300	1244	1460	287	2530	630	2090	690	940	210	1620	GD
	CRE 95-1 [14]	11	●	V1	98.7	DN 300	1244	1460	287	2530	630	2090	690	940	210	1620	GD
	CRE 95-1	15	●	V1	129.6	DN 300	1320	1460	287	2530	830	2090	690	940	300	1766	GD
	CRE 95-2-2	18.5	●	V1	160.6	DN 300	1424	1460	287	2530	830	2090	690	940	300	1822	GD
	CRE 95-2-1	22	●	V1	189.1	DN 300	1450	1460	287	2530	830	2090	690	940	300	1906	GD
6	CRE 95-1-1 [14]	7.5	●	V1	82.5	DN 350	1225	1460	287	3032	830	2150	690	940	210	1839	GD
	CRE 95-1-1	11	●	V1	118.3	DN 350	1244	1460	287	3032	830	2150	690	940	210	1971	GD
	CRE 95-1 [14]	11	●	V1	118.3	DN 350	1244	1460	287	3032	830	2150	690	940	210	1971	GD
	CRE 95-1	15	●	V1	155.4	DN 350	1320	1460	287	3032	830	2150	690	940	300	2143	GD
	CRE 95-2-2	18.5	●	V1	192.6	DN 350	1424	1460	287	3032	830	2150	690	940	300	2215	GD
	CRE 95-2-1	22	●	V1	226.8	DN 350	1450	1700	287	3032	800	2150	690	940	400	2405	GC

[14] Pump with undersized motor

Legend

- ● Three-phase motors

Explanation

- Motor power is the power per pump.
- Rated current: Additional current applies for the control circuit depending on design.
- Voltage code, V1: 3 × 400 V ± 5 %, 50 Hz, N, PE.
- Design GC: The pumps and the control panel are mounted on their own base frames. The base frames are separated. The control panel is for floor mounting and can be placed up to 3 meters from the pumps.
- Design GD: The pumps and the control panel are mounted on their own base frames. The base frames are separated. The control panel can be placed up to 3 meters from the pumps.
- Dimensions may vary by ± 10 mm.

Hydro MPC-EC with CR 95

Curve charts

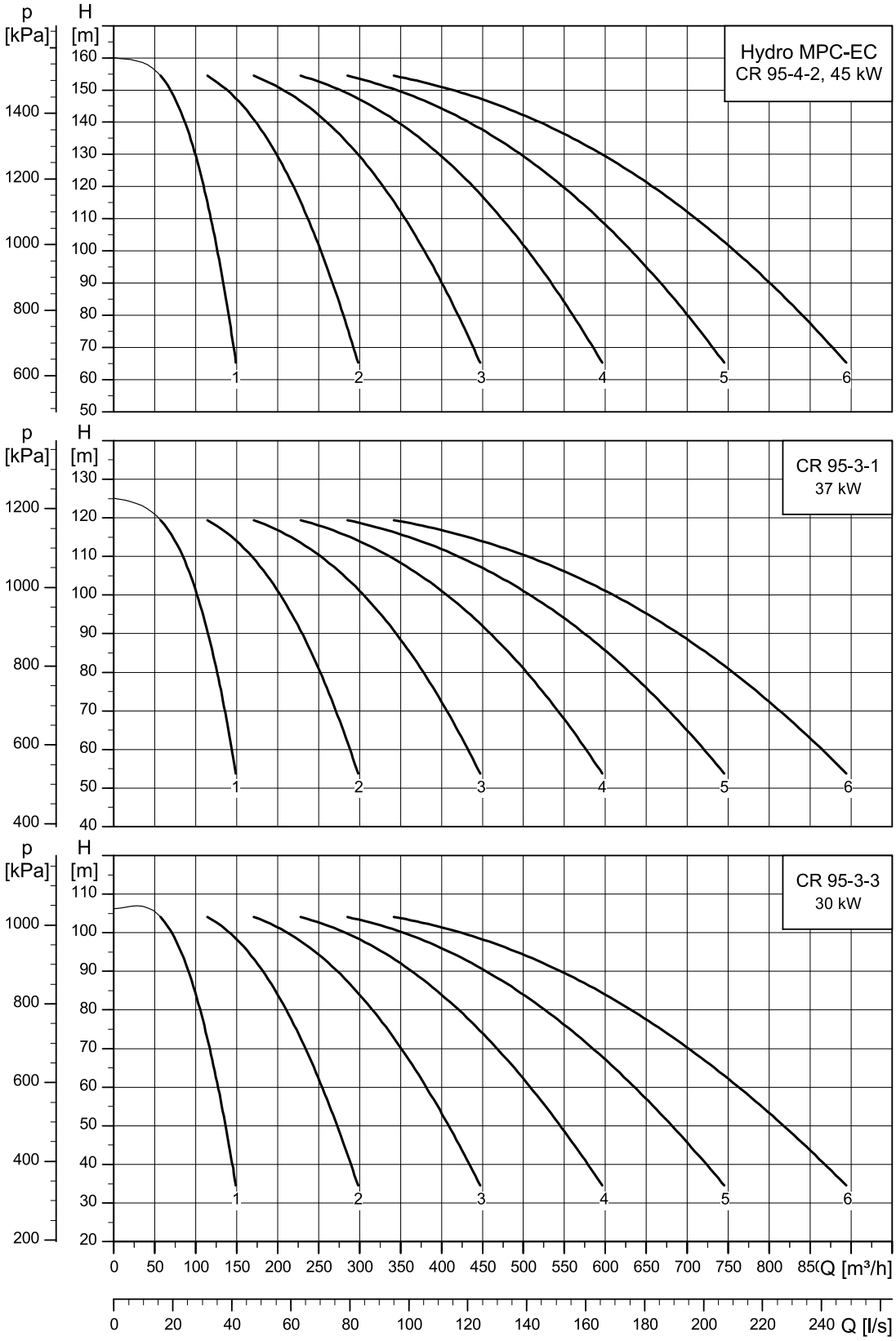

Losses in fittings and valves are not included.

Dimensional sketch

Below is the dimensional sketch of a system in different designs. The system is shown as an example. The pumps supplied may differ from the sketch.

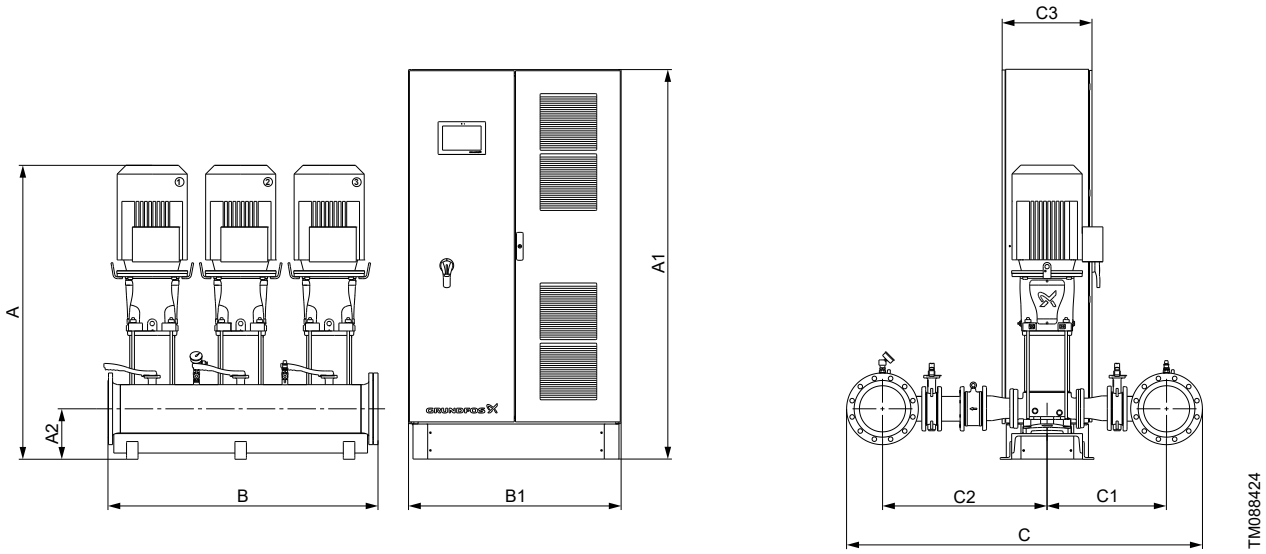

Design GC

Electrical data, dimensions and weights

Number of pumps	Pump type	Motor power [kW]	Motor type	Voltage code	Rated current [A]	Connections	A [mm]	A1 [mm]	A2 [mm]	B [mm]	B1 [mm]	C [mm]	C1 [mm]	C2 [mm]	C3 [mm]	Net weight [kg]	Design
2	CR 95-3-3	30	●	V1	110.8	DN 200	1663	2000	287	1026	1000	1970	690	940	400	1211	GC
	CR 95-3-1	37	●	V1	132.8	DN 200	1688	2200	287	1026	1200	1970	690	940	400	1317	GC
	CR 95-4-2	45	●	V1	164.8	DN 200	1884	2200	287	1026	1200	1970	690	940	500	1544	GC
3	CR 95-3-3	30	●	V1	165.8	DN 250	1663	2200	287	1528	1200	2035	690	940	500	1841	GC
	CR 95-3-1	37	●	V1	198.8	DN 250	1688	2200	287	1528	1200	2035	690	940	500	2082	GC
	CR 95-4-2	45	●	V1	247.2	DN 250	1884	2000	287	1528	2000	2035	690	940	400	2428	GC
4	CR 95-3-3	30	●	V1	221.2	DN 250	1663	2000	287	2028	2000	2035	690	940	400	2491	GC
	CR 95-3-1	37	●	V1	265.2	DN 250	1688	2000	287	2028	2000	2035	690	940	400	2596	GC
	CR 95-4-2	45	●	V1	329.2	DN 250	1884	2000	287	2028	2400	2035	690	940	500	3054	GC
5	CR 95-3-3	30	●	V1	276.2	DN 300	1663	2000	287	2530	2400	2090	690	940	400	3111	GC
	CR 95-3-1	37	●	V1	331.2	DN 300	1688	2000	287	2530	2400	2090	690	940	400	3241	GC
	CR 95-4-2	45	●	V1	412	DN 300	1884	2000	287	2530	3000	2090	690	940	400	4032	GC
6	CR 95-3-3	30	●	V1	331.2	DN 350	1663	2000	287	3032	2400	2150	690	940	400	3680	GC
	CR 95-3-1	37	●	V1	397.7	DN 350	1688	2000	287	3032	2400	2150	690	940	400	3862	GC
	CR 95-4-2	45	●	V1	494	DN 350	1884	2000	287	3032	3600	2150	690	940	500	4772	GC

Legend

- ● Three-phase motors

Explanation

- Motor power is the power per pump.
- Rated current: Additional current applies for the control circuit depending on design.
- Voltage code, V1: 3 × 400 V ± 5 %, 50 Hz, N, PE.
- Design GC: The pumps and the control panel are mounted on their own base frames. The base frames are separated. The control panel is for floor mounting and can be placed up to 3 meters from the pumps.
- Dimensions may vary by ± 10 mm.

Hydro MPC-E with CRE 125

Curve charts

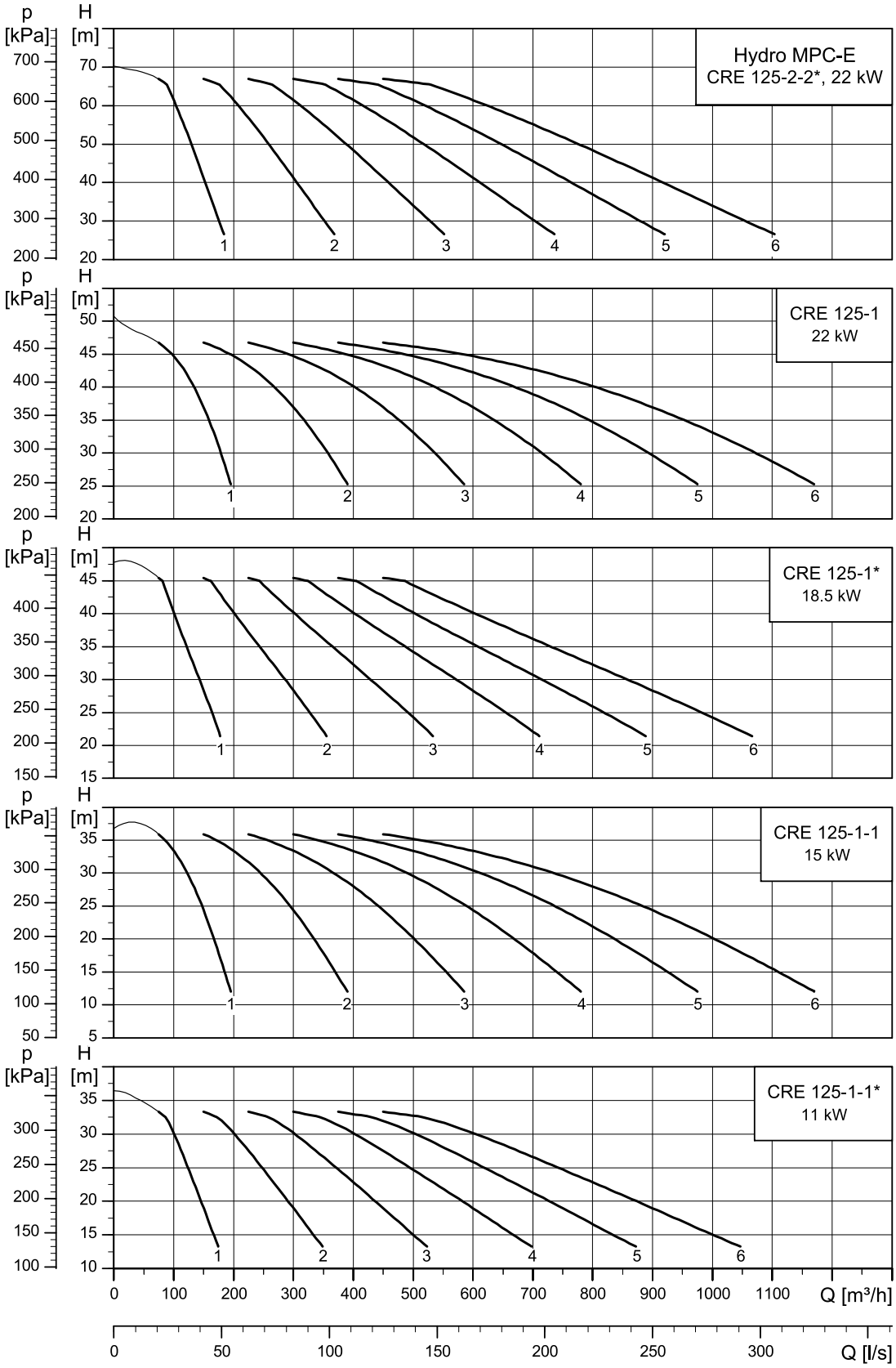

* For undersized motors, the maximum speed depends on the power usage.
Losses in fittings and valves are not included.

Dimensional sketch

Below is the dimensional sketch of a system in different designs. The system is shown as an example. The pumps supplied may differ from the sketch.

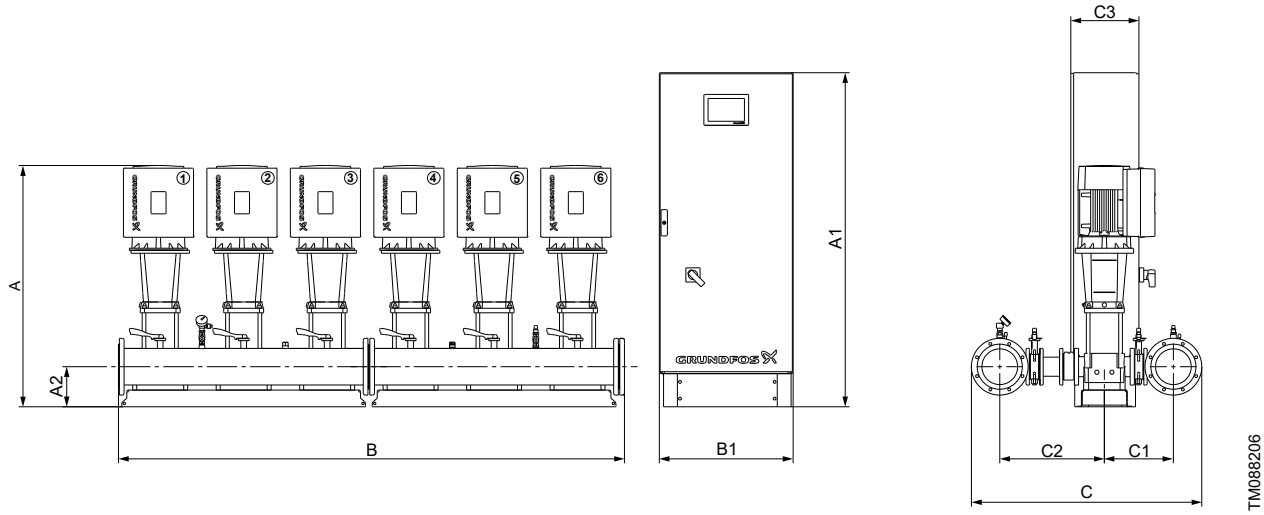

Design GC

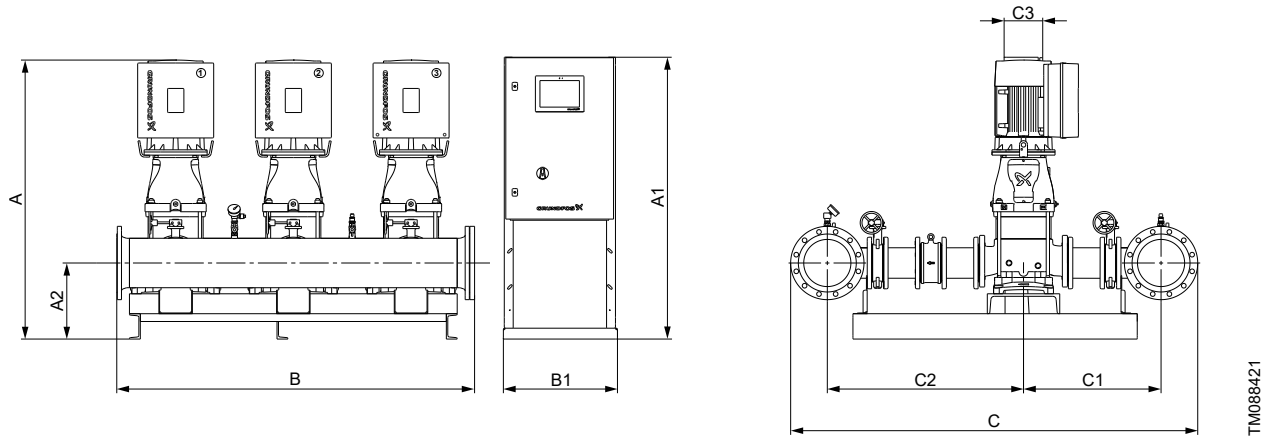

Design GD

Electrical data, dimensions and weights

Number of pumps	Pump type	Motor power [kW]	Motor type	Voltage code	Rated current [A]	Connections	A [mm]	A1 [mm]	A2 [mm]	B [mm]	B1 [mm]	C [mm]	C1 [mm]	C2 [mm]	C3 [mm]	Net weight [kg]	Design
2	CRE 125-1-1 [15]	11	●	V1	40	DN 250	1441	1460	432	1328	630	2440	860	1176	210	948	GD
	CRE 125-1-1	15	●	V1	52.3	DN 250	1517	1460	432	1328	630	2440	860	1176	210	1000	GD
	CRE 125-1 [15]	18.5	●	V1	64.7	DN 250	1517	1460	432	1328	630	2440	860	1176	210	1010	GD
	CRE 125-1	22	●	V1	76.1	DN 250	1543	1460	432	1328	630	2440	860	1176	210	1049	GD
	CRE 125-2-2 [15]	22	●	V1	76.1	DN 250	1665	1460	432	1328	630	2440	860	1176	210	1071	GD
3	CRE 125-1-1 [15]	11	●	V1	59.5	DN 250	1441	1460	432	1978	630	2440	860	1176	210	1321	GD
	CRE 125-1-1	15	●	V1	78.1	DN 250	1517	1460	432	1978	630	2440	860	1176	210	1404	GD
	CRE 125-1 [15]	18.5	●	V1	96.7	DN 250	1517	1460	432	1978	630	2440	860	1176	210	1421	GD
	CRE 125-1	22	●	V1	113.8	DN 250	1543	1460	432	1978	630	2440	860	1176	210	1469	GD
	CRE 125-2-2 [15]	22	●	V1	113.8	DN 250	1665	1460	432	1978	630	2440	860	1176	210	1501	GD
4	CRE 125-1-1 [15]	11	●	V1	79.1	DN 300	1441	1460	432	2630	630	2495	860	1176	210	1877	GD
	CRE 125-1-1	15	●	V1	103.8	DN 300	1517	1460	432	2630	830	2495	860	1176	210	1981	GD
	CRE 125-1 [15]	18.5	●	V1	128.6	DN 300	1517	1460	432	2630	830	2495	860	1176	300	2018	GD
	CRE 125-1	22	●	V1	151.4	DN 300	1543	1460	432	2630	830	2495	860	1176	300	2081	GD
	CRE 125-2-2 [15]	22	●	V1	151.4	DN 300	1665	1460	432	2630	830	2495	860	1176	300	2125	GD
5	CRE 125-1-1 [15]	11	●	V1	98.7	DN 350	1441	1460	432	3282	630	2555	860	1176	210	2325	GD
	CRE 125-1-1	15	●	V1	129.6	DN 350	1517	1460	432	3282	830	2555	860	1176	300	2472	GD
	CRE 125-1 [15]	18.5	●	V1	160.6	DN 350	1517	1460	432	3282	830	2555	860	1176	300	2498	GD
	CRE 125-1	22	●	V1	189.1	DN 350	1543	1460	432	3282	830	2555	860	1176	300	2583	GD
	CRE 125-2-2 [15]	22	●	V1	189.1	DN 350	1665	1460	432	3282	830	2555	860	1176	300	2637	GD
6	CRE 125-1-1 [15]	11	●	V1	118.3	DN 350	1441	1460	432	3932	830	2555	860	1176	210	2707	GD
	CRE 125-1-1	15	●	V1	155.4	DN 350	1517	1460	432	3932	830	2555	860	1176	300	2879	GD
	CRE 125-1 [15]	18.5	●	V1	192.6	DN 350	1517	1460	432	3932	830	2555	860	1176	300	2915	GD
	CRE 125-1	22	●	V1	226.8	DN 350	1543	1700	432	3932	800	2555	860	1176	400	3106	GC
	CRE 125-2-2 [15]	22	●	V1	226.8	DN 350	1665	1700	432	3932	800	2555	860	1176	400	3171	GC

[15] Pump with undersized motor

Legend

- ● Three-phase motors

Explanation

- Motor power is the power per pump.
- Rated current: Additional current applies for the control circuit depending on design.
- Voltage code, V1: 3 × 400 V ± 5 %, 50 Hz, N, PE.
- Design GC: The pumps and the control panel are mounted on their own base frames. The base frames are separated. The control panel is for floor mounting and can be placed up to 3 meters from the pumps.
- Design GD: The pumps and the control panel are mounted on their own base frames. The base frames are separated. The control panel can be placed up to 3 meters from the pumps.
- Dimensions may vary by ± 10 mm.

Hydro MPC-EC with CR 125

Curve charts

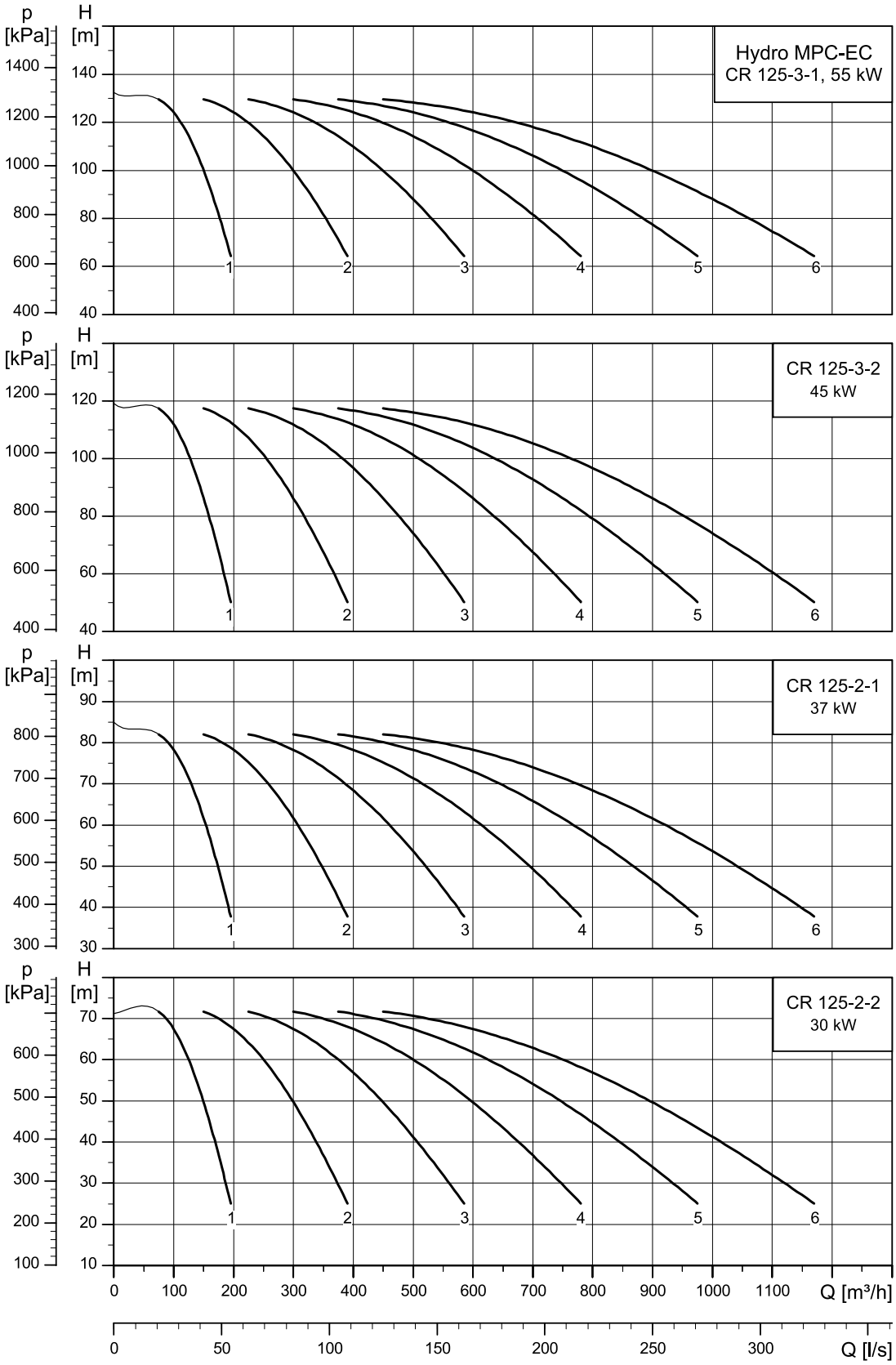

Losses in fittings and valves are not included.

Dimensional sketch

Below is the dimensional sketch of a system in different designs. The system is shown as an example. The pumps supplied may differ from the sketch.

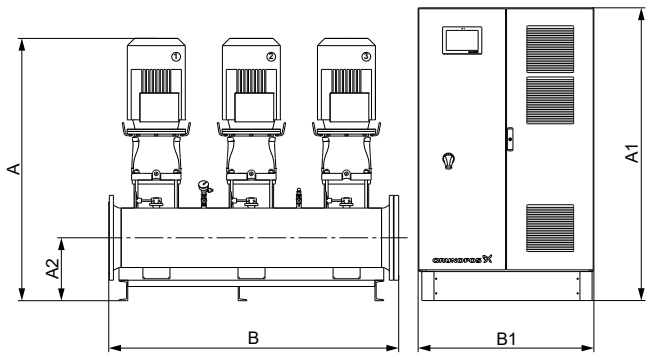

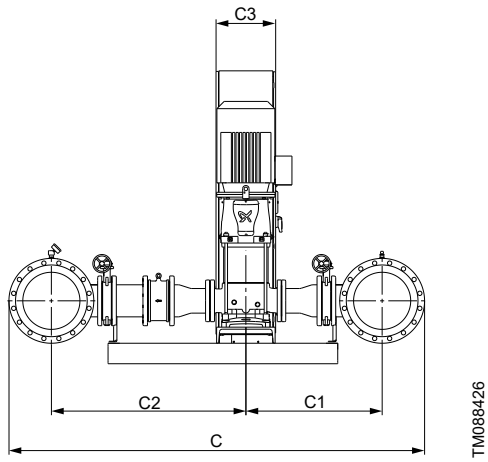

Design GC

Electrical data, dimensions and weights

Number of pumps	Pump type	Motor power [kW]	Motor type	Voltage code	Rated current [A]	Connections	A [mm]	A1 [mm]	A2 [mm]	B [mm]	B1 [mm]	C [mm]	C1 [mm]	C2 [mm]	C3 [mm]	Net weight [kg]	Design
2	CR 125-2-2	30	●	V1	110.8	DN 250	1770	2000	432	1328	1000	2440	860	1176	400	1553	GC
	CR 125-2-1	37	●	V1	132.8	DN 250	1795	2200	432	1328	1200	2440	860	1176	400	1660	GC
	CR 125-3-2	45	●	V1	164.8	DN 250	2012	2200	432	1328	1200	2440	860	1176	500	1899	GC
	CR 125-3-1	55	●	V1	192.8	DN 250	2050	2200	432	1328	1200	2440	860	1176	600	2165	GC
3	CR 125-2-2	30	●	V1	165.8	DN 250	1770	2200	432	1978	1200	2440	860	1176	500	2198	GC
	CR 125-2-1	37	●	V1	198.8	DN 250	1795	2200	432	1978	1200	2440	860	1176	500	2439	GC
	CR 125-3-2	45	●	V1	247.2	DN 250	2012	2000	432	1978	2000	2440	860	1176	400	2805	GC
	CR 125-3-1	55	●	V1	289.2	DN 250	2050	2000	432	1978	2000	2440	860	1176	400	3163	GC
4	CR 125-2-2	30	●	V1	221.2	DN 300	1770	2000	432	2630	2000	2495	860	1176	400	3140	GC
	CR 125-2-1	37	●	V1	265.2	DN 300	1795	2000	432	2630	2000	2495	860	1176	400	3246	GC
	CR 125-3-2	45	●	V1	329.2	DN 300	2012	2000	432	2630	2400	2495	860	1176	500	3729	GC
	CR 125-3-1	55	●	V1	385.7	DN 300	2050	2000	432	2630	2400	2495	860	1176	500	4224	GC
5	CR 125-2-2	30	●	V1	276.2	DN 350	1770	2000	432	3282	2400	2555	860	1176	400	3810	GC
	CR 125-2-1	37	●	V1	331.2	DN 350	1795	2000	432	3282	2400	2555	860	1176	400	3940	GC
	CR 125-3-2	45	●	V1	412	DN 350	2012	2000	432	3282	3000	2555	860	1176	400	4763	GC
	CR 125-3-1	55	●	V1	482	DN 350	2050	2000	432	3282	3000	2555	860	1176	400	5383	GC
6	CR 125-2-2	30	●	V1	331.2	DN 350	1770	2000	432	3932	2400	2555	860	1176	400	4408	GC
	CR 125-2-1	37	●	V1	397.7	DN 350	1795	2000	432	3932	2400	2555	860	1176	400	4590	GC
	CR 125-3-2	45	●	V1	494	DN 350	2012	2000	432	3932	3600	2555	860	1176	500	5540	GC
	CR 125-3-1	55	●	V1	578	DN 350	2050	2000	432	3932	3600	2555	860	1176	500	6321	GC

Legend

- ● Three-phase motors

Explanation

- Motor power is the power per pump.
- Rated current: Additional current applies for the control circuit depending on design.
- Voltage code, V1: 3 × 400 V ± 5 %, 50 Hz, N, PE.
- Design GC: The pumps and the control panel are mounted on their own base frames. The base frames are separated. The control panel is for floor mounting and can be placed up to 3 meters from the pumps.
- Dimensions may vary by ± 10 mm.

Hydro MPC-E with CRE 155

Curve charts

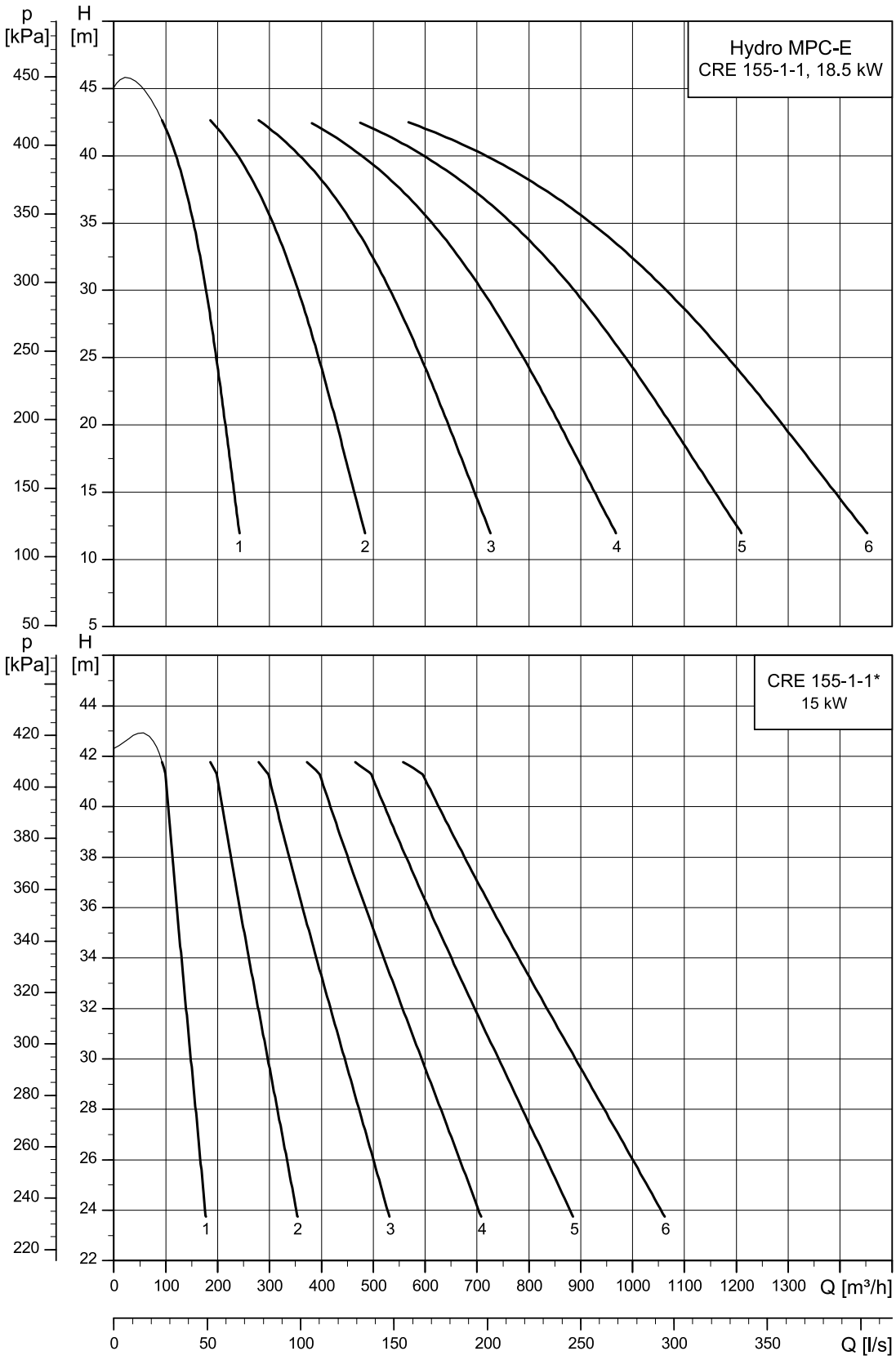

TM089385

* For undersized motors, the maximum speed depends on the power usage.
Losses in fittings and valves are not included.

Dimensional sketch

Below is the dimensional sketch of a system in different designs. The system is shown as an example. The pumps supplied may differ from the sketch.

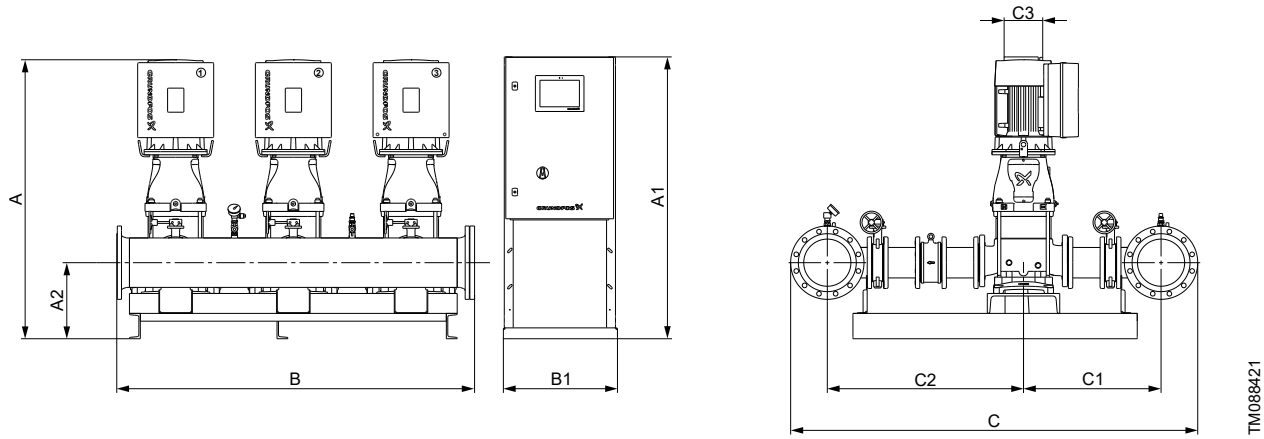

Design GD

Electrical data, dimensions and weights

Number of pumps	Pump type	Motor power [kW]	Motor type	Voltage code	Rated current [A]	Connections	A [mm]	A1 [mm]	A2 [mm]	B [mm]	B1 [mm]	C [mm]	C1 [mm]	C2 [mm]	C3 [mm]	Net weight [kg]	Design
2	CRE 155-1-1 [16]	15	●	V1	52.3	DN 250	1517	1460	432	1328	630	2688	947	1337	210	1105	GD
	CRE 155-1-1	18.5	●	V1	64.7	DN 250	1517	1460	432	1328	630	2688	947	1337	210	1115	GD
3	CRE 155-1-1 [16]	15	●	V1	78.1	DN 300	1517	1460	432	1980	630	2743	947	1337	210	1602	GD
	CRE 155-1-1	18.5	●	V1	96.7	DN 300	1517	1460	432	1980	630	2743	947	1337	210	1618	GD
4	CRE 155-1-1 [16]	15	●	V1	103.8	DN 350	1517	1460	432	2632	830	2803	947	1337	210	2267	GD
	CRE 155-1-1	18.5	●	V1	128.6	DN 350	1517	1460	432	2632	830	2803	947	1337	300	2305	GD
5	CRE 155-1-1 [16]	15	●	V1	129.6	DN 400	1517	1460	432	3284	830	2863	947	1337	300	2750	GD
	CRE 155-1-1	18.5	●	V1	160.6	DN 400	1517	1460	432	3284	830	2863	947	1337	300	2776	GD
6	CRE 155-1-1 [16]	15	●	V1	155.4	DN 400	1517	1460	432	3934	830	2863	947	1337	300	3234	GD
	CRE 155-1-1	18.5	●	V1	192.6	DN 400	1517	1460	432	3934	830	2863	947	1337	300	3270	GD

[16] Pump with undersized motor

Legend

- ● Three-phase motors

Explanation

- Motor power is the power per pump.
- Rated current: Additional current applies for the control circuit depending on design.
- Voltage code, V1: 3 × 400 V ± 5 %, 50 Hz, N, PE.
- Design GD: The pumps and the control panel are mounted on their own base frames. The base frames are separated. The control panel can be placed up to 3 meters from the pumps.
- Dimensions may vary by ± 10 mm.

Hydro MPC-EC with CR 155

Curve charts

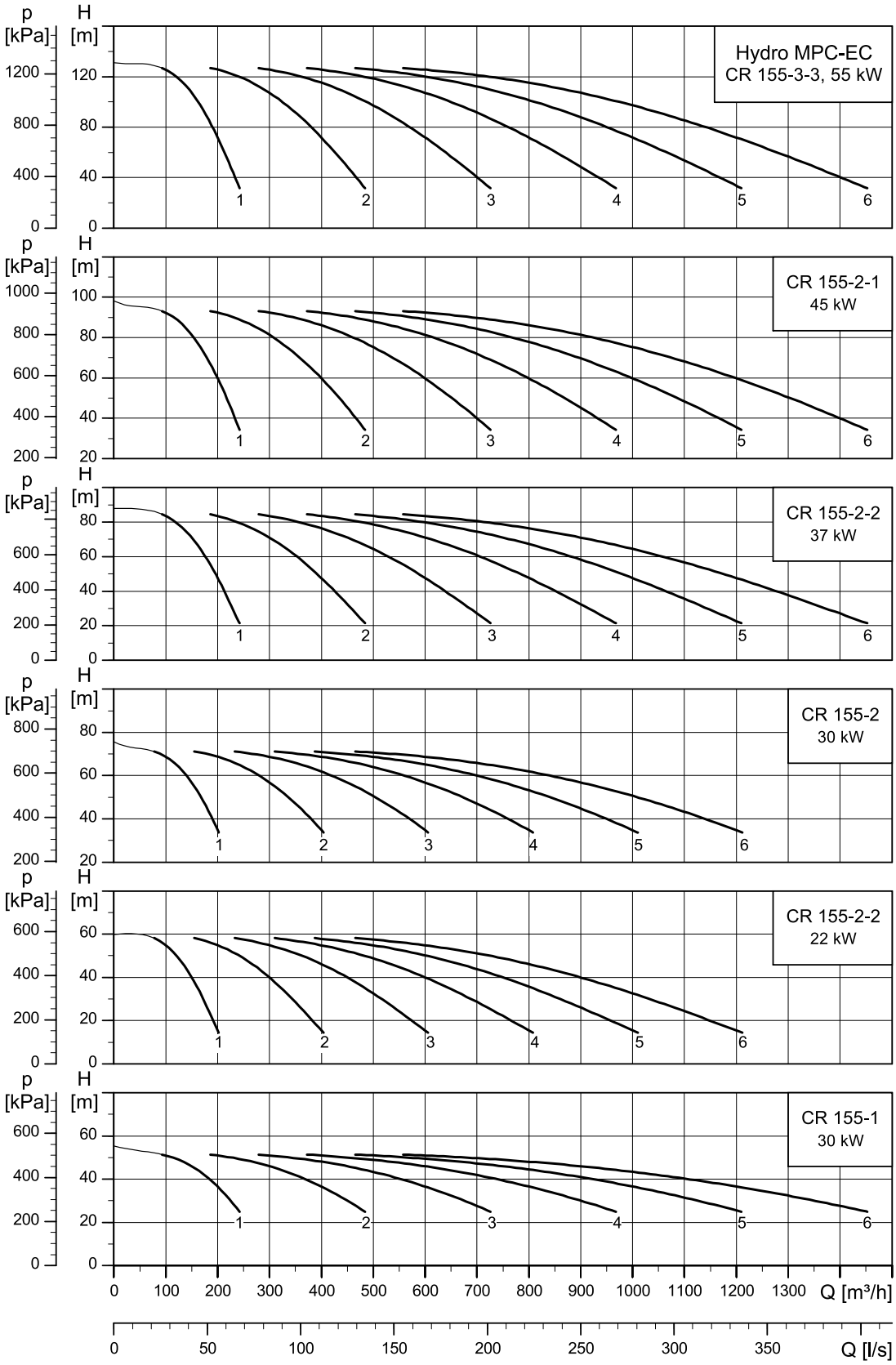

Losses in fittings and valves are not included.

Dimensional sketch

Below is the dimensional sketch of a system in different designs. The system is shown as an example. The pumps supplied may differ from the sketch.

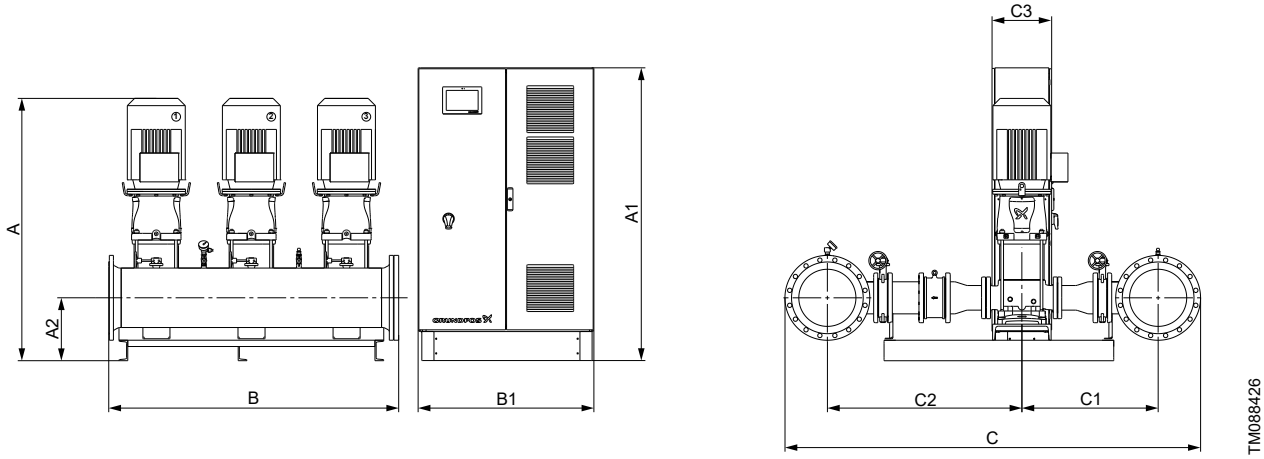

Design GC

Electrical data, dimensions and weights

Number of pumps	Pump type	Motor power [kW]	Motor type	Voltage code	Rated current [A]	Connections	A [mm]	A1 [mm]	A2 [mm]	B [mm]	B1 [mm]	C [mm]	C1 [mm]	C2 [mm]	C3 [mm]	Net weight [kg]	Design
2	CR 155-1	30	●	V1	110.8	DN 250	1648	2000	432	1328	1000	2688	947	1337	400	1636	GC
	CR 155-2-2 [17]	22	●	V1	80.8	DN 250	1818	1700	432	1328	1000	2688	947	1337	400	1604	GC
	CR 155-2 [17]	30	●	V1	110.8	DN 250	1867	2000	432	1328	1000	2688	947	1337	400	1793	GC
	CR 155-2-2	37	●	V1	132.8	DN 250	1795	2200	432	1328	1200	2688	947	1337	400	1765	GC
	CR 155-2-1	45	●	V1	164.8	DN 250	1890	2200	432	1328	1200	2688	947	1337	500	1942	GC
	CR 155-3-3	55	●	V1	192.8	DN 250	2050	2200	432	1328	1200	2688	947	1337	600	2270	GC
3	CR 155-1	30	●	V1	165.8	DN 300	1648	2200	432	1980	1200	2743	947	1337	500	2363	GC
	CR 155-2-2 [17]	22	●	V1	120.8	DN 300	1818	2000	432	1980	1200	2743	947	1337	400	2268	GC
	CR 155-2 [17]	30	●	V1	165.8	DN 300	1867	2200	432	1980	1200	2743	947	1337	500	2598	GC
	CR 155-2-2	37	●	V1	198.8	DN 300	1795	2200	432	1980	1200	2743	947	1337	500	2637	GC
	CR 155-2-1	45	●	V1	247.2	DN 300	1890	2000	432	1980	2000	2743	947	1337	400	2909	GC
	CR 155-3-3	55	●	V1	289.2	DN 300	2050	2000	432	1980	2000	2743	947	1337	400	3361	GC
4	CR 155-1	30	●	V1	221.2	DN 350	1648	2000	432	2632	2000	2803	947	1337	400	3383	GC
	CR 155-2-2 [17]	22	●	V1	160.8	DN 300	1818	2000	432	2630	2000	2743	947	1337	400	3238	GC
	CR 155-2 [17]	30	●	V1	221.2	DN 300	1867	2000	432	2630	2000	2743	947	1337	400	3624	GC
	CR 155-2-2	37	●	V1	265.2	DN 350	1795	2000	432	2632	2000	2803	947	1337	400	3533	GC
	CR 155-2-1	45	●	V1	329.2	DN 350	1890	2000	432	2632	2400	2803	947	1337	500	3893	GC
	CR 155-3-3	55	●	V1	385.7	DN 350	2050	2000	432	2632	2400	2803	947	1337	500	4512	GC
5	CR 155-1	30	●	V1	276.2	DN 400	1648	2000	432	3284	2400	2863	947	1337	400	4034	GC
	CR 155-2-2 [17]	22	●	V1	201.2	DN 350	1818	2000	432	3282	2000	2803	947	1337	400	3953	GC
	CR 155-2 [17]	30	●	V1	276.2	DN 350	1867	2000	432	3282	2400	2803	947	1337	400	4411	GC
	CR 155-2-2	37	●	V1	331.2	DN 400	1795	2000	432	3284	2400	2863	947	1337	400	4219	GC
	CR 155-2-1	45	●	V1	412	DN 400	1890	2000	432	3284	3000	2863	947	1337	400	4887	GC
	CR 155-3-3	55	●	V1	482	DN 400	2050	2000	432	3284	3000	2863	947	1337	400	5663	GC
6	CR 155-1	30	●	V1	331.2	DN 400	1648	2000	432	3934	2400	2863	947	1337	400	4698	GC
	CR 155-2-2 [17]	22	●	V1	241.2	DN 400	1818	2000	432	3934	2400	2863	947	1337	400	4623	GC
	CR 155-2 [17]	30	●	V1	331.2	DN 400	1867	2000	432	3934	2400	2863	947	1337	400	5168	GC
	CR 155-2-2	37	●	V1	397.7	DN 400	1795	2000	432	3934	2400	2863	947	1337	400	4946	GC
	CR 155-2-1	45	●	V1	494	DN 400	1890	2000	432	3934	3600	2863	947	1337	500	5710	GC
	CR 155-3-3	55	●	V1	578	DN 400	2050	2000	432	3934	3600	2863	947	1337	500	6677	GC

[17] For 50 Hz pumps.

Legend

- ● Three-phase motors

Explanation

- Motor power is the power per pump.
- Rated current: Additional current applies for the control circuit depending on design.
- Voltage code, V1: 3 × 400 V ± 5 %, 50 Hz, N, PE.
- Design GC: The pumps and the control panel are mounted on their own base frames. The base frames are separated. The control panel is for floor mounting and can be placed up to 3 meters from the pumps.
- Dimensions may vary by ± 10 mm.

Hydro MPC-EC with CR 185

Curve charts

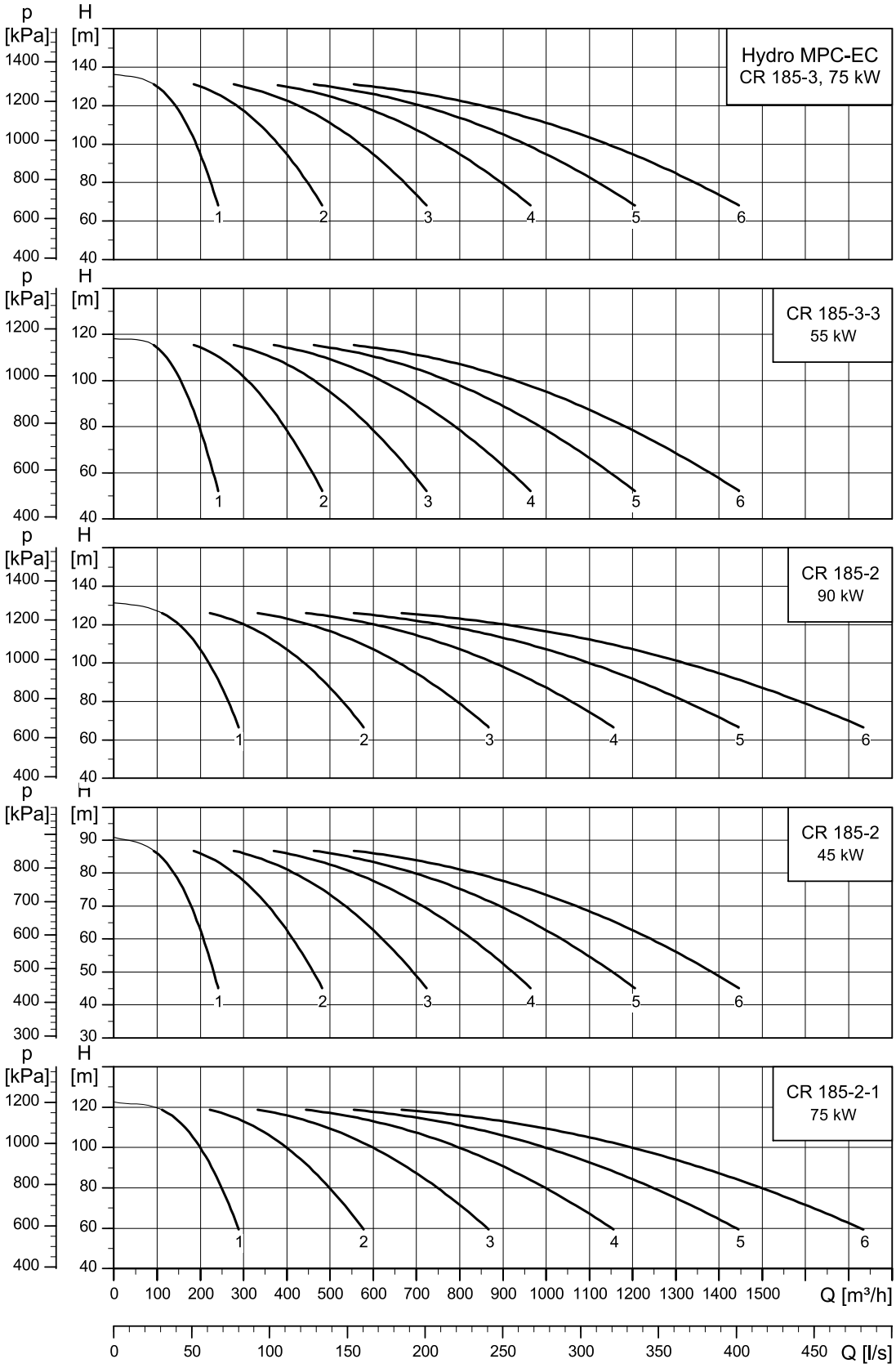

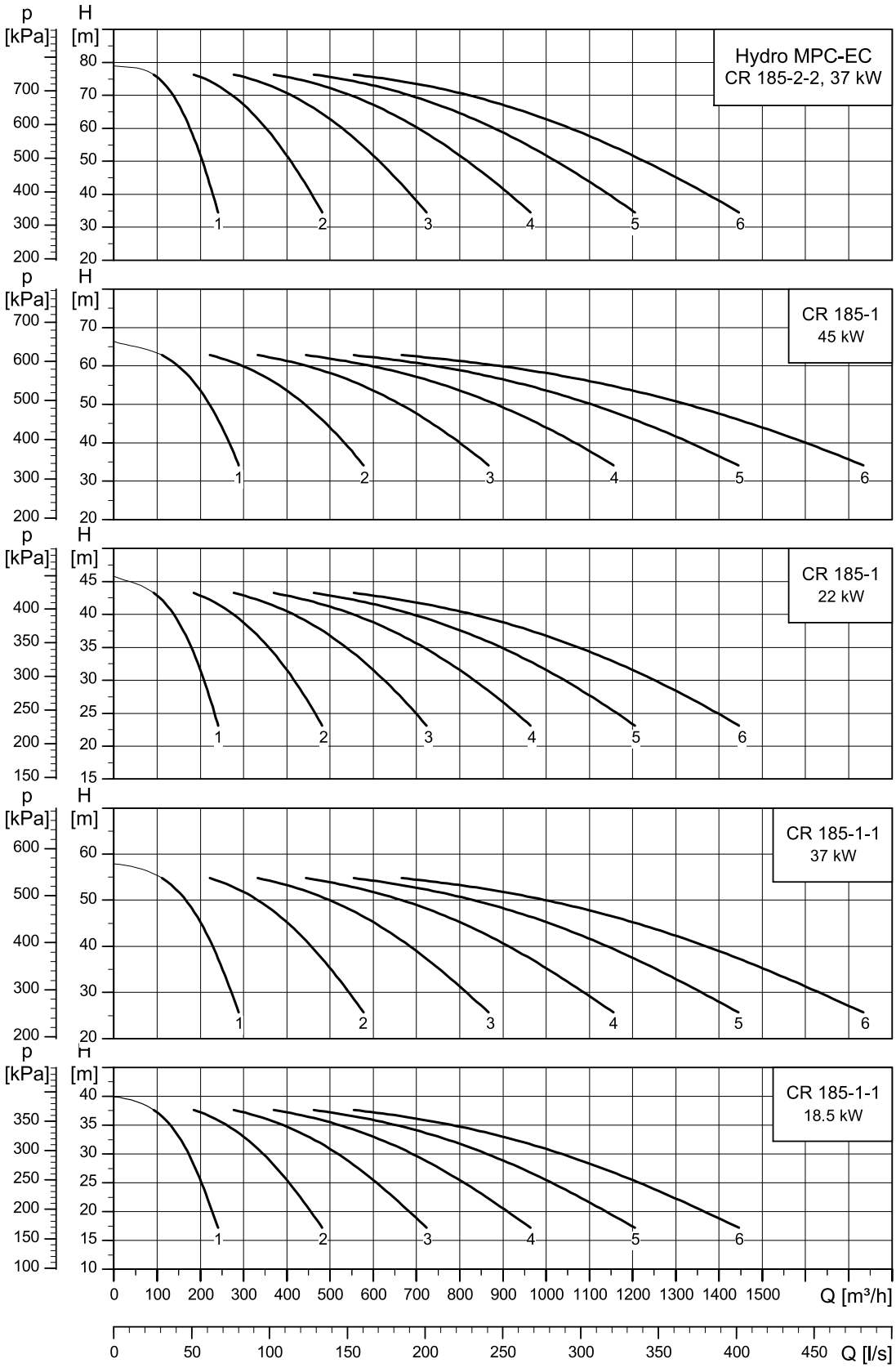

Losses in fittings and valves are not included.

Dimensional sketch

Below is the dimensional sketch of a system in different designs. The system is shown as an example. The pumps supplied may differ from the sketch.

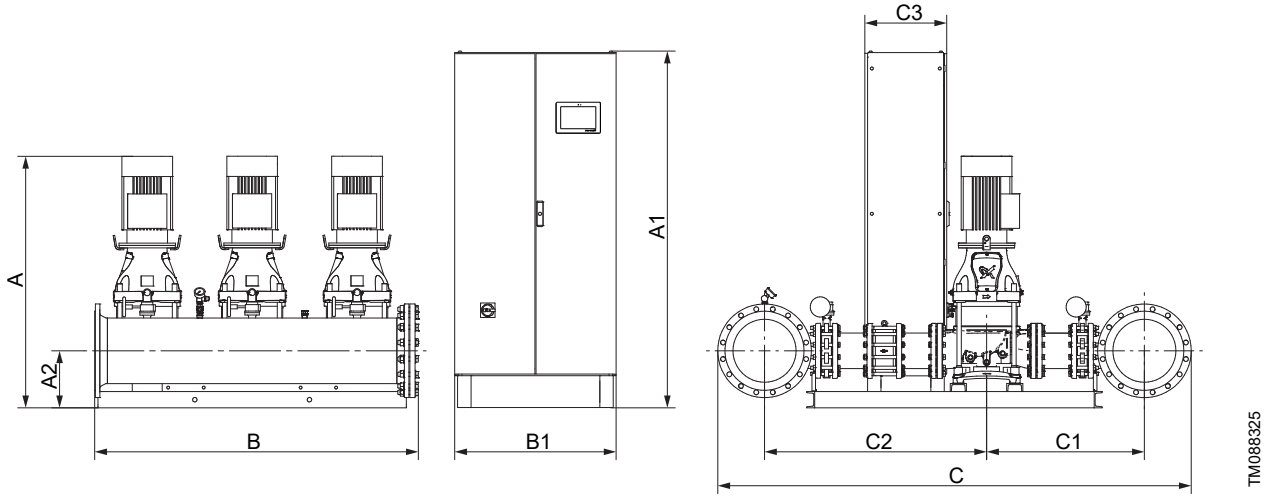

Design GC

Electrical data, dimensions and weights

Number of pumps	Pump type	Motor power [kW]	Motor type	Voltage code	Rated current [A]	Connections	A [mm]	A1 [mm]	A2 [mm]	B [mm]	B1 [mm]	C [mm]	C1 [mm]	C2 [mm]	C3 [mm]	Net weight [kg]	Design
2	CR 185-1-1 [18)]	18.5	•	V1	68.8	DN 250	1580	1700	400	1330	800	2755	975	1375	400	1480	GC
	CR 185-1-1	37	•	V1	132.8	DN 250	1700	2200	400	1330	1200	2755	975	1375	400	1940	GC
	CR 185-1 [18)]	22	•	V1	80.8	DN 250	1610	1700	400	1330	1000	2755	975	1375	400	1550	GC
	CR 185-1	45	•	V1	164.8	DN 250	1790	2200	400	1330	1200	2755	975	1375	500	2206	GC
	CR 185-2-2 [18)]	37	•	V1	132.8	DN 250	1830	2200	400	1330	1200	2755	975	1375	400	1970	GC
	CR 185-2-1	75	•	V1	267.2	DN 250	2040	2200	400	1830	2400	2755	975	1375	500	3116	GC
	CR 185-2 [18)]	45	•	V1	164.8	DN 250	1920	2200	400	1330	1200	2755	975	1375	500	2236	GC
	CR 185-2	90	•	V1	*	DN 250	2150	*	400	1830	*	2755	975	1375	*	*	GC
	CR 185-3-3 [18)]	55	•	V1	192.8	DN 250	2090	2200	400	1830	1200	2755	975	1375	600	2549	GC
	CR 185-3 [18)]	75	•	V1	267.2	DN 250	2160	2200	400	1830	2400	2757	977	1375	500	3144	GC
3	CR 185-1-1 [18)]	18.5	•	V1	102.8	DN 300	1580	1700	400	1980	1200	2782	962	1360	400	2165	GC
	CR 185-1-1	37	•	V1	198.8	DN 350	1700	2200	400	1980	1200	2872	977	1375	500	3031	GC
	CR 185-1 [18)]	22	•	V1	120.8	DN 300	1610	2000	400	1980	1200	2780	960	1360	400	2309	GC
	CR 185-1	45	•	V1	247.2	DN 350	1790	2000	400	1980	2000	2872	977	1375	400	3468	GC
	CR 185-2-2 [18)]	37	•	V1	198.8	DN 300	1830	2200	400	1980	1200	2780	960	1360	500	3022	GC
	CR 185-2-1	75	•	V1	400.2	DN 350	2040	2200	400	2730	2400	2872	977	1375	500	4431	GC
	CR 185-2 [18)]	45	•	V1	247.2	DN 300	1920	2000	400	1980	2000	2780	960	1360	400	3459	GC
	CR 185-2	90	•	V1	*	DN 350	2150	*	400	2730	*	2872	977	1375	*	*	GC
	CR 185-3-3 [18)]	55	•	V1	289.2	DN 300	2090	2000	400	2730	2000	2780	960	1360	400	3939	GC
	CR 185-3 [18)]	75	•	V1	400.2	DN 300	2160	2200	400	2730	2400	2780	960	1360	500	4395	GC
4	CR 185-1-1 [18)]	18.5	•	V1	136.8	DN 350	1580	2000	400	2630	1200	2870	975	1375	400	2975	GC
	CR 185-1-1	37	•	V1	265.2	DN 350	1700	2000	400	2630	2000	2870	975	1375	400	3997	GC
	CR 185-1 [18)]	22	•	V1	160.8	DN 350	1610	2000	400	2630	2000	2870	975	1375	400	3411	GC
	CR 185-1	45	•	V1	329.2	DN 350	1790	2000	400	2630	2400	2870	975	1375	500	4500	GC
	CR 185-2-2 [18)]	37	•	V1	265.2	DN 350	1830	2000	400	2630	2000	2870	975	1375	400	4057	GC
	CR 185-2-1	75	•	V1	534	DN 350	2040	2200	400	3630	3600	2870	975	1375	500	6095	GC
	CR 185-2 [18)]	45	•	V1	329.2	DN 350	1920	2000	400	2630	2400	2870	975	1375	500	4560	GC
	CR 185-2	90	•	V1	*	DN 350	2150	*	400	3630	*	2870	975	1375	*	*	GC
	CR 185-3-3 [18)]	55	•	V1	385.7	DN 350	2090	2000	400	3630	2400	2870	975	1375	500	5253	GC
	CR 185-3 [18)]	75	•	V1	534	DN 350	2160	2200	400	3630	3600	2870	975	1375	500	6151	GC

Number of pumps	Pump type	Motor power [kW]	Motor type	Voltage code	Rated current [A]	Connections	A [mm]	A1 [mm]	A2 [mm]	B [mm]	B1 [mm]	C [mm]	C1 [mm]	C2 [mm]	C3 [mm]	Net weight [kg]	Design
5	CR 185-1-1 [18]	18.5	●	V1	171.2	DN 400	1580	2000	400	3290	1600	2930	975	1375	400	3931	GC
	CR 185-1-1	37	●	V1	331.2	DN 400	1700	2000	400	3290	2400	2930	975	1375	400	4831	GC
	CR 185-1 [18]	22	●	V1	201.2	DN 400	1610	2000	400	3290	2000	2930	975	1375	400	4022	GC
	CR 185-1	45	●	V1	412	DN 400	1790	2000	400	3290	3000	2930	975	1375	400	5706	GC
	CR 185-2-2 [18]	37	●	V1	331.2	DN 400	1830	2000	400	3290	2400	2930	975	1375	400	4906	GC
	CR 185-2-1	75	●	V1	667	DN 400	2040	2400	400	4540	3600	2930	975	1375	600	7490	GC
	CR 185-2 [18]	45	●	V1	412	DN 400	1920	2000	400	3290	3000	2930	975	1375	400	5781	GC
	CR 185-2	90	●	V1	*	DN 400	2150	*	400	4540	*	2930	975	1375	*	*	GC
	CR 185-3-3 [18]	55	●	V1	482	DN 400	2090	2000	400	4540	3000	2930	975	1375	400	6717	GC
	CR 185-3 [18]	75	●	V1	667	DN 400	2160	2400	400	4540	3600	2930	975	1375	600	7560	GC
6	CR 185-1-1 [18]	18.5	●	V1	205.2	DN 400	1580	1600	400	3940	2400	2930	975	1375	500	4762	GC
	CR 185-1-1	37	●	V1	397.7	DN 450	1700	2000	400	3940	2400	3040	1000	1400	400	5866	GC
	CR 185-1 [18]	22	●	V1	241.2	DN 400	1610	2000	400	3940	2400	2930	975	1375	400	4859	GC
	CR 185-1	45	●	V1	494	DN 450	1790	2000	400	3940	3600	3040	1000	1400	500	6889	GC
	CR 185-2-2 [18]	37	●	V1	397.7	DN 400	1830	2000	400	3940	2400	2930	975	1375	400	5789	GC
	CR 185-2-1	75	●	V1	800.8	DN 450	2040	2400	400	5440	4800	3040	1000	1400	600	9221	GC
	CR 185-2 [18]	45	●	V1	494	DN 400	1920	2000	400	3940	3600	2930	975	1375	500	6812	GC
	CR 185-2	90	●	V1	*	DN 450	2150	*	400	5440	*	3040	1000	1400	*	*	GC
	CR 185-3-3 [18]	55	●	V1	578	DN 400	2090	2000	400	5440	3600	2930	975	1375	500	7774	GC
	CR 185-3 [18]	75	●	V1	800.8	DN 400	2160	2400	400	5440	4800	2930	975	1375	600	9127	GC

[18] For 50 Hz pumps.

Legend

- ● Three-phase motors
- * On request

Explanation

- Motor power is the power per pump.
- Rated current: Additional current applies for the control circuit depending on design.
- Voltage code, V1: 3 × 400 V ± 5 %, 50 Hz, N, PE.
- Design GC: The pumps and the control panel are mounted on their own base frames. The base frames are separated. The control panel is for floor mounting and can be placed up to 3 meters from the pumps.
- Dimensions may vary by ± 10 mm.

Hydro MPC-EC with CR 215

Curve charts

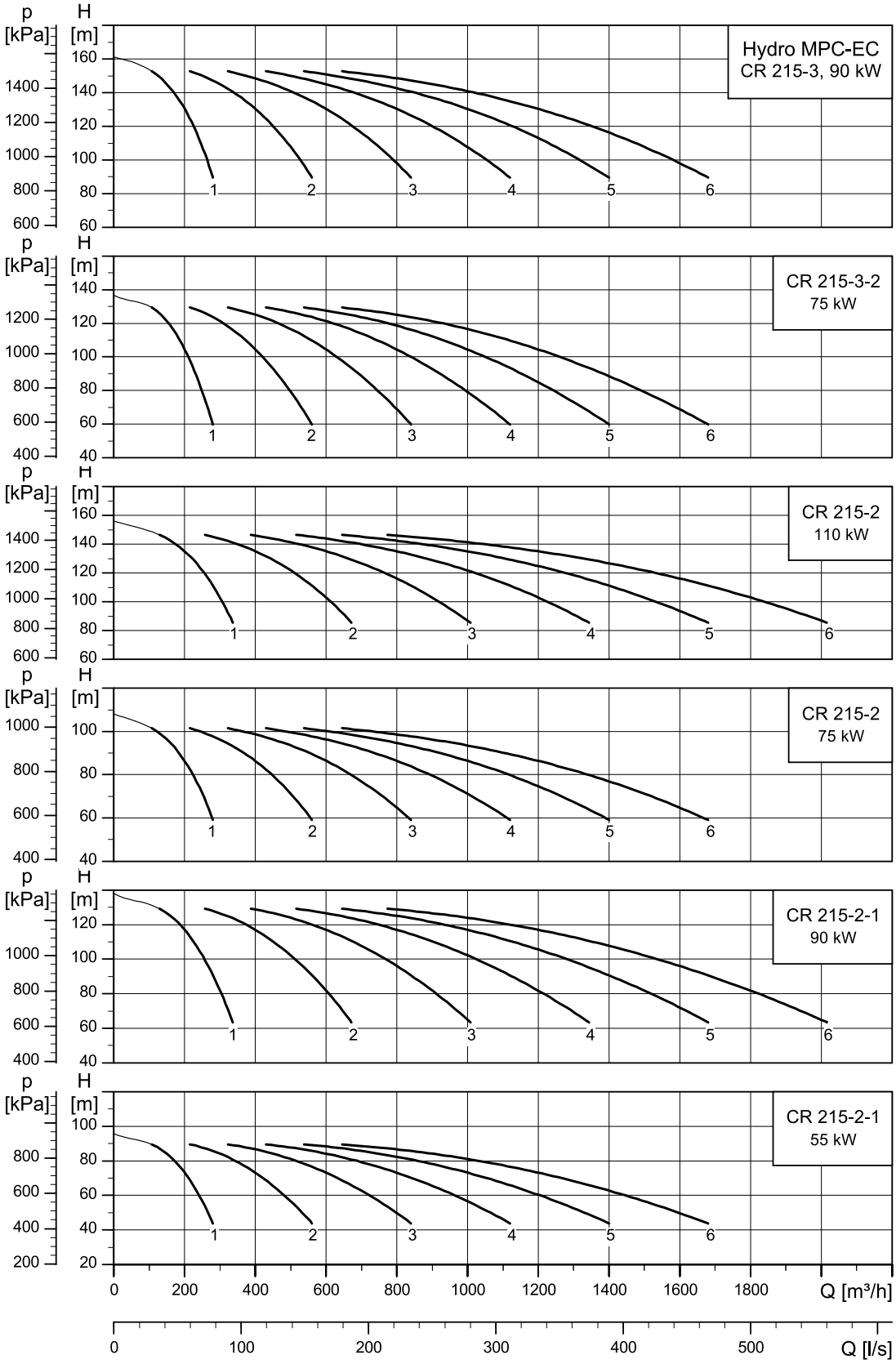

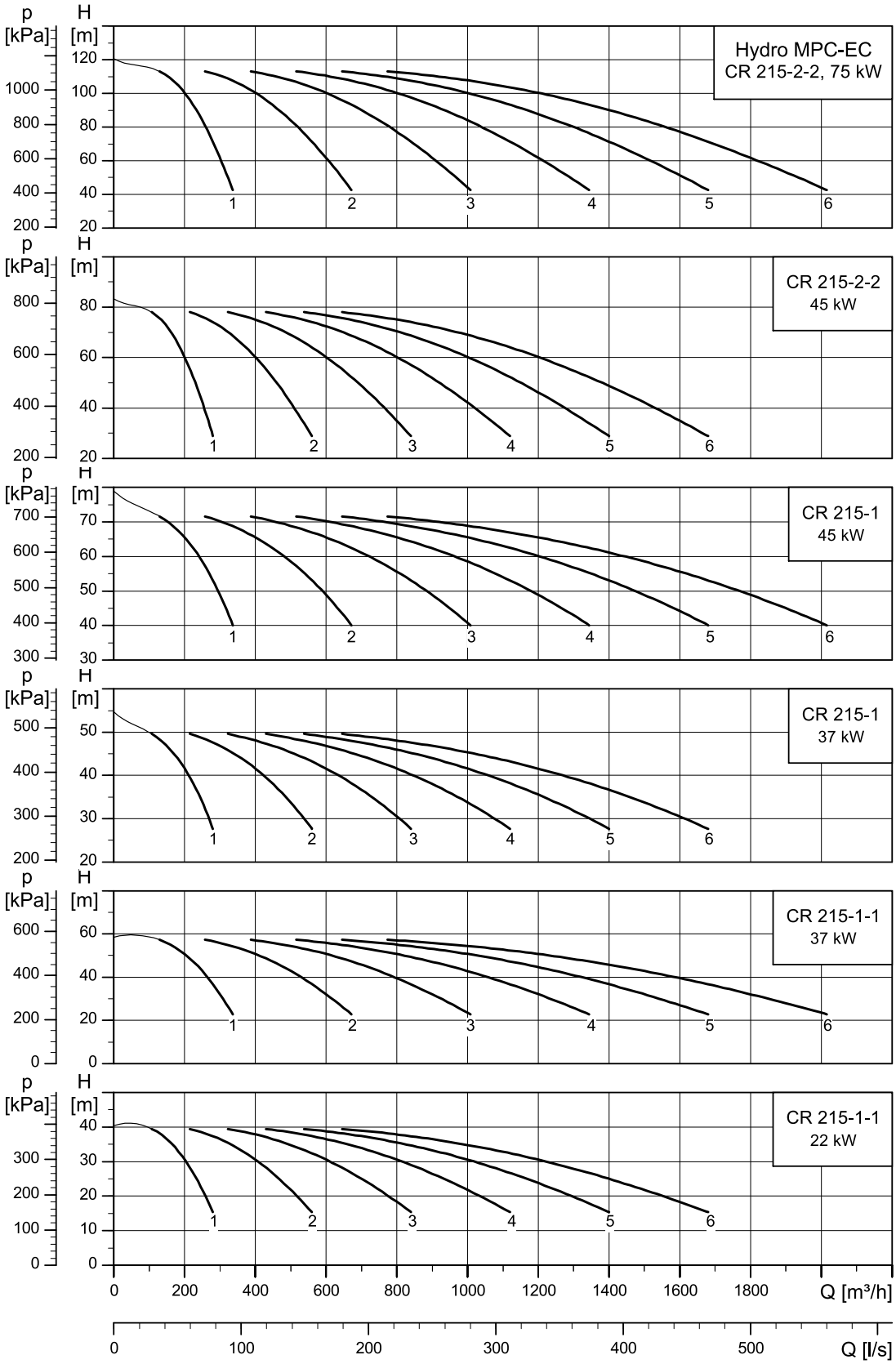

Losses in fittings and valves are not included.

Dimensional sketch

Below is the dimensional sketch of a system in different designs. The system is shown as an example. The pumps supplied may differ from the sketch.

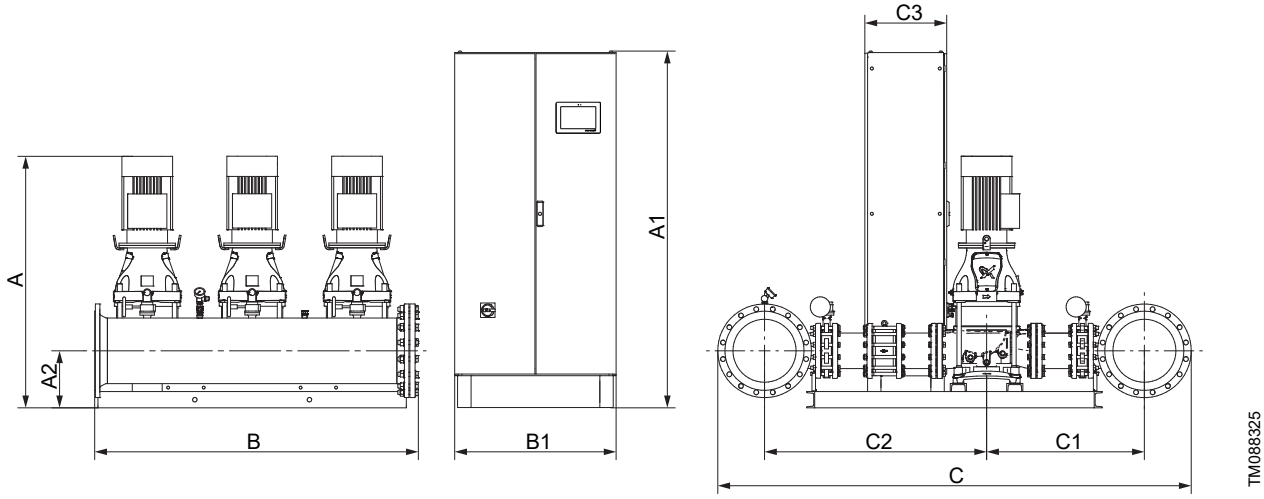

Design GC

Electrical data, dimensions and weights

Number of pumps	Pump type	Motor power [kW]	Motor type	Voltage code	Rated current [A]	Connections	A [mm]	A1 [mm]	A2 [mm]	B [mm]	B1 [mm]	C [mm]	C1 [mm]	C2 [mm]	C3 [mm]	Net weight [kg]	Design
2	CR 215-1-1 [19)]	22	•	V1	80.8	DN 300	1610	1700	400	1330	1000	2780	960	1360	400	1616	GC
	CR 215-1-1	45	•	V1	164.8	DN 300	1790	2200	400	1330	1200	2780	960	1360	500	2272	GC
	CR 215-1 [19)]	37	•	V1	132.8	DN 300	1700	2200	400	1330	1200	2780	960	1360	400	2006	GC
	CR 215-1	55	•	V1	192.8	DN 300	1840	2200	400	1830	1200	2780	960	1360	600	2517	GC
	CR 215-2-2 [19)]	45	•	V1	164.8	DN 300	1920	2200	400	1330	1200	2780	960	1360	500	2302	GC
	CR 215-2-2	75	•	V1	267.2	DN 300	2040	2200	400	1830	2400	2780	960	1360	500	3142	GC
	CR 215-2-1 [19)]	55	•	V1	192.8	DN 300	1960	2200	400	1830	1200	2780	960	1360	600	2547	GC
	CR 215-2-1	90	•	V1	*	DN 300	2150	*	400	1830	*	2780	960	1360	*	*	GC
	CR 215-2 [19)]	75	•	V1	267.2	DN 300	2040	2200	400	1830	2400	2780	960	1360	500	3142	GC
	CR 215-2	110	•	V1	*	DN 300	2150	*	400	1830	*	2780	960	1360	*	*	GC
	CR 215-3-2 [19)]	75	•	V1	267.2	DN 300	2160	2200	400	1830	2400	2780	960	1360	500	3172	GC
	CR 215-3 [19)]	90	•	V1	*	DN 300	2270	*	400	1830	*	2780	960	1360	*	*	GC
3	CR 215-1-1 [19)]	22	•	V1	120.8	DN 350	1610	2000	400	1980	1200	2870	975	1375	400	2396	GC
	CR 215-1-1	45	•	V1	247.2	DN 350	1790	2000	400	1980	2000	2870	975	1375	400	3501	GC
	CR 215-1 [19)]	37	•	V1	198.8	DN 350	1700	2200	400	1980	1200	2870	975	1375	500	3064	GC
	CR 215-1	55	•	V1	289.2	DN 350	1840	2000	400	2730	2000	2870	975	1375	400	3901	GC
	CR 215-2-2 [19)]	45	•	V1	247.2	DN 350	1920	2000	400	1980	2000	2870	975	1375	400	3546	GC
	CR 215-2-2	75	•	V1	400.2	DN 350	2040	2200	400	2730	2400	2870	975	1375	500	4402	GC
	CR 215-2-1 [19)]	55	•	V1	289.2	DN 350	1960	2000	400	2730	2000	2870	975	1375	400	3946	GC
	CR 215-2-1	90	•	V1	*	DN 350	2150	*	400	2730	*	2870	975	1375	*	*	GC
	CR 215-2 [19)]	75	•	V1	400.2	DN 350	2040	2200	400	2730	2400	2870	975	1375	500	4402	GC
	CR 215-2	110	•	V1	*	DN 350	2150	*	400	2730	*	2870	975	1375	*	*	GC
	CR 215-3-2 [19)]	75	•	V1	400.2	DN 350	2160	2200	400	2730	2400	2870	975	1375	500	4447	GC
	CR 215-3 [19)]	90	•	V1	*	DN 350	2270	*	400	2730	*	2870	975	1375	*	*	GC

Number of pumps	Pump type	Motor power [kW]	Motor type	Voltage code	Rated current [A]	Connections	A [mm]	A1 [mm]	A2 [mm]	B [mm]	B1 [mm]	C [mm]	C1 [mm]	C2 [mm]	C3 [mm]	Net weight [kg]	Design
4	CR 215-1-1 [19]	22	●	V1	160.8	DN 400	1610	2000	400	2640	2000	2930	975	1375	400	3606	GC
	CR 215-1-1	45	●	V1	329.2	DN 400	1790	2000	400	2640	2400	2930	975	1375	500	4695	GC
	CR 215-1 [19]	37	●	V1	265.2	DN 400	1700	2000	400	2640	2000	2930	975	1375	400	4192	GC
	CR 215-1	55	●	V1	385.7	DN 400	1840	2000	400	3640	2400	2930	975	1375	500	5229	GC
	CR 215-2-2 [19]	45	●	V1	329.2	DN 400	1920	2000	400	2640	2400	2930	975	1375	500	4755	GC
	CR 215-2-2	75	●	V1	534	DN 400	2040	2200	400	3640	3600	2930	975	1375	500	6187	GC
	CR 215-2-1 [19]	55	●	V1	385.7	DN 400	1960	2000	400	3640	2400	2930	975	1375	500	5289	GC
	CR 215-2-1	90	●	V1	*	DN 400	2150	*	400	3640	*	2930	975	1375	*	*	GC
	CR 215-2 [19]	75	●	V1	534	DN 400	2040	2200	400	3640	3600	2930	975	1375	500	6187	GC
	CR 215-2	110	●	V1	*	DN 400	2150	*	400	3640	*	2930	975	1375	*	*	GC
	CR 215-3-2 [19]	75	●	V1	534	DN 400	2160	2200	400	3640	3600	2930	975	1375	500	6247	GC
	CR 215-3 [19]	90	●	V1	*	DN 400	2270	*	400	3640	*	2930	975	1375	*	*	GC
5	CR 215-1-1 [19]	22	●	V1	201.2	DN 450	1610	2000	400	3290	2000	3090	1025	1425	400	4333	GC
	CR 215-1-1	45	●	V1	412	DN 450	1790	2000	400	3290	3000	3090	1025	1425	400	6017	GC
	CR 215-1 [19]	37	●	V1	331.2	DN 450	1700	2000	400	3290	2400	3090	1025	1425	400	5142	GC
	CR 215-1	55	●	V1	482	DN 450	1840	2000	400	4540	3000	3090	1025	1425	400	6717	GC
	CR 215-2-2 [19]	45	●	V1	412	DN 450	1920	2000	400	3290	3000	3090	1025	1425	400	6092	GC
	CR 215-2-2	75	●	V1	667	DN 450	2040	2400	400	4540	3600	3090	1025	1425	600	7634	GC
	CR 215-2-1 [19]	55	●	V1	482	DN 450	1960	2000	400	4540	3000	3090	1025	1425	400	6792	GC
	CR 215-2-1	90	●	V1	*	DN 450	2150	*	400	4540	*	3090	1025	1425	*	*	GC
	CR 215-2 [19]	75	●	V1	667	DN 450	2040	2400	400	4540	3600	3090	1025	1425	600	7634	GC
	CR 215-2	110	●	V1	*	DN 450	2150	*	400	4540	*	3090	1025	1425	*	*	GC
	CR 215-3-2 [19]	75	●	V1	667	DN 450	2160	2400	400	4540	3600	3090	1025	1425	600	7709	GC
	CR 215-3 [19]	90	●	V1	*	DN 450	2270	*	400	4540	*	3090	1025	1425	*	*	GC
6	CR 215-1-1 [19]	22	●	V1	241.2	DN 500	1610	2000	400	5250	2400	3225	1055	1455	400	5321	GC
	CR 215-1-1	45	●	V1	494	DN 500	1790	2000	400	5250	3600	3225	1055	1455	500	7184	GC
	CR 215-1 [19]	37	●	V1	397.7	DN 500	1700	2000	400	5250	2400	3225	1055	1455	400	6161	GC
	CR 215-1	55	●	V1	578	DN 500	1840	2000	400	7250	3600	3225	1055	1455	500	7976	GC
	CR 215-2-2 [19]	45	●	V1	494	DN 500	1920	2000	400	5250	3600	3225	1055	1455	500	7274	GC
	CR 215-2-2	75	●	V1	800.8	DN 500	2040	2400	400	7250	4800	3225	1055	1455	600	9419	GC
	CR 215-2-1 [19]	55	●	V1	578	DN 500	1960	2000	400	7250	3600	3225	1055	1455	500	8066	GC
	CR 215-2-1	90	●	V1	*	DN 500	2150	*	400	7250	*	3225	1055	1455	*	*	GC
	CR 215-2 [19]	75	●	V1	800.8	DN 500	2040	2400	400	7250	4800	3225	1055	1455	600	9419	GC
	CR 215-2	110	●	V1	*	DN 500	2150	*	400	7250	*	3225	1055	1455	*	*	GC
	CR 215-3-2 [19]	75	●	V1	800.8	DN 500	2160	2400	400	7250	4800	3225	1055	1455	600	9509	GC
	CR 215-3 [19]	90	●	V1	*	DN 500	2270	*	400	7250	*	3225	1055	1455	*	*	GC

[19] For 50 Hz pumps.

Legend

- ● Three-phase motors
- * On request

Explanation

- Motor power is the power per pump.
- Rated current: Additional current applies for the control circuit depending on design.
- Voltage code, V1: 3 × 400 V ± 5 %, 50 Hz, N, PE.
- Design GC: The pumps and the control panel are mounted on their own base frames. The base frames are separated. The control panel is for floor mounting and can be placed up to 3 meters from the pumps.
- Dimensions may vary by ± 10 mm.

Hydro MPC-EC with CR 255

Curve charts

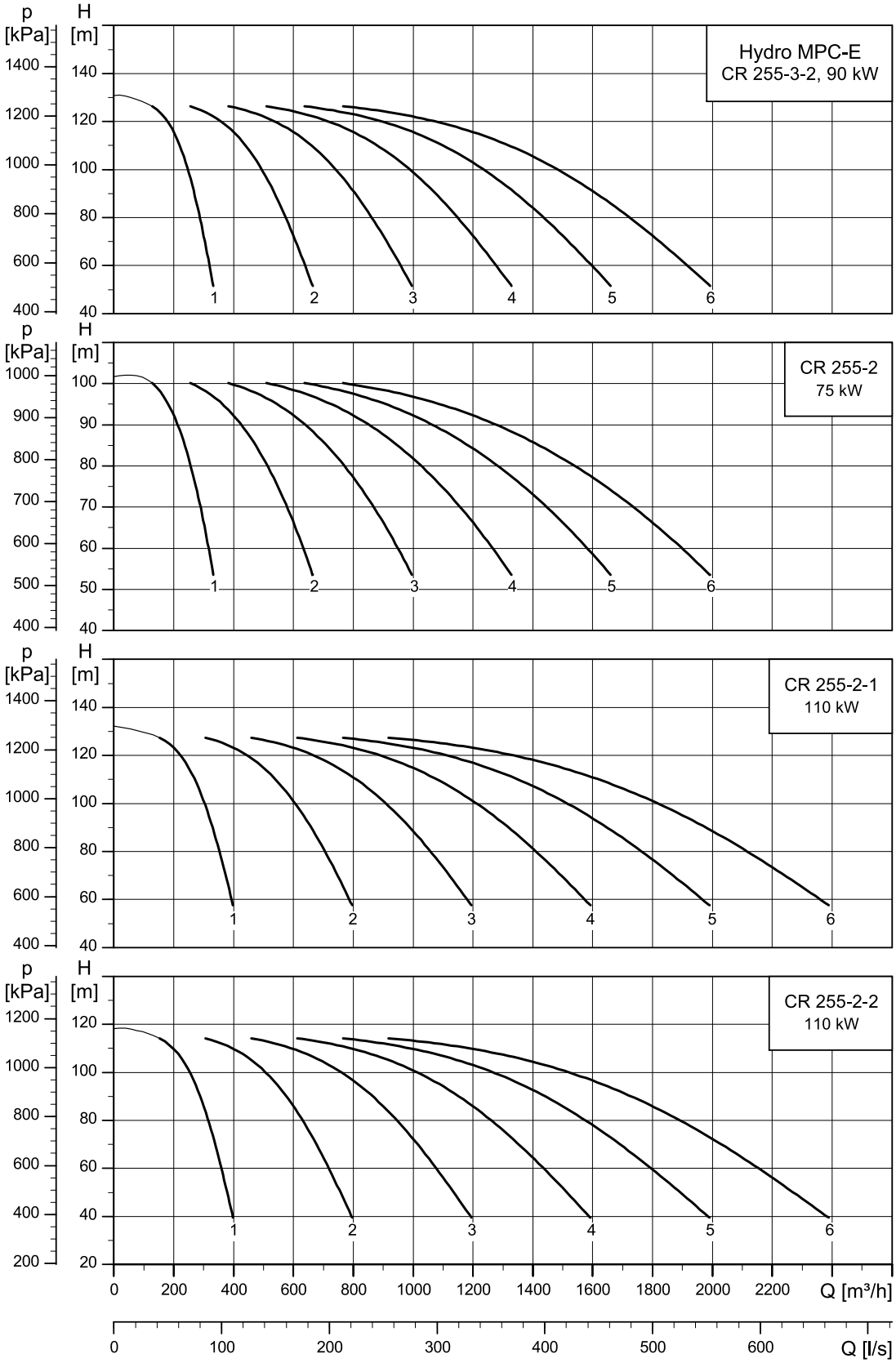

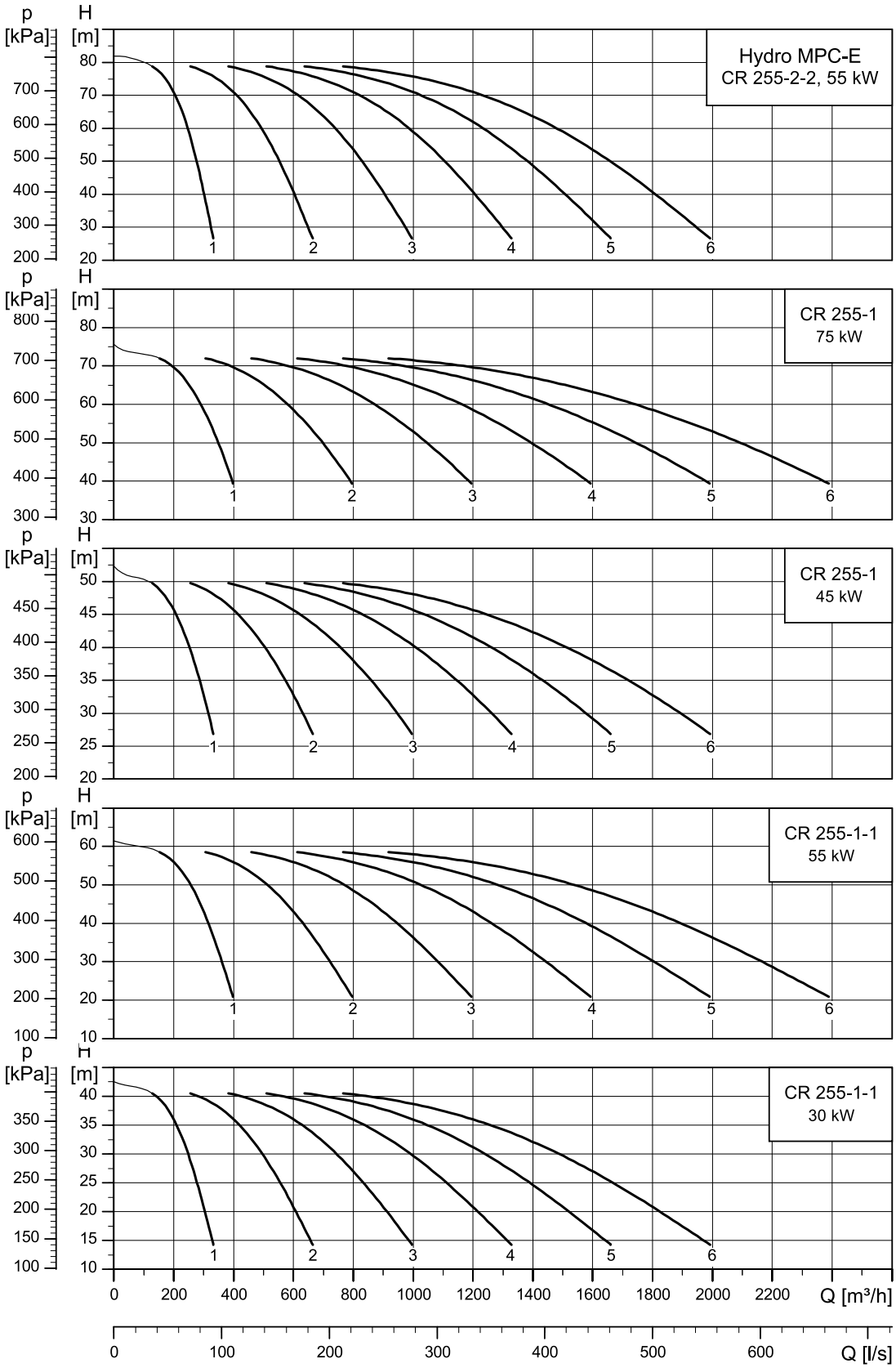

Losses in fittings and valves are not included.

Dimensional sketch

Below is the dimensional sketch of a system in different designs. The system is shown as an example. The pumps supplied may differ from the sketch.

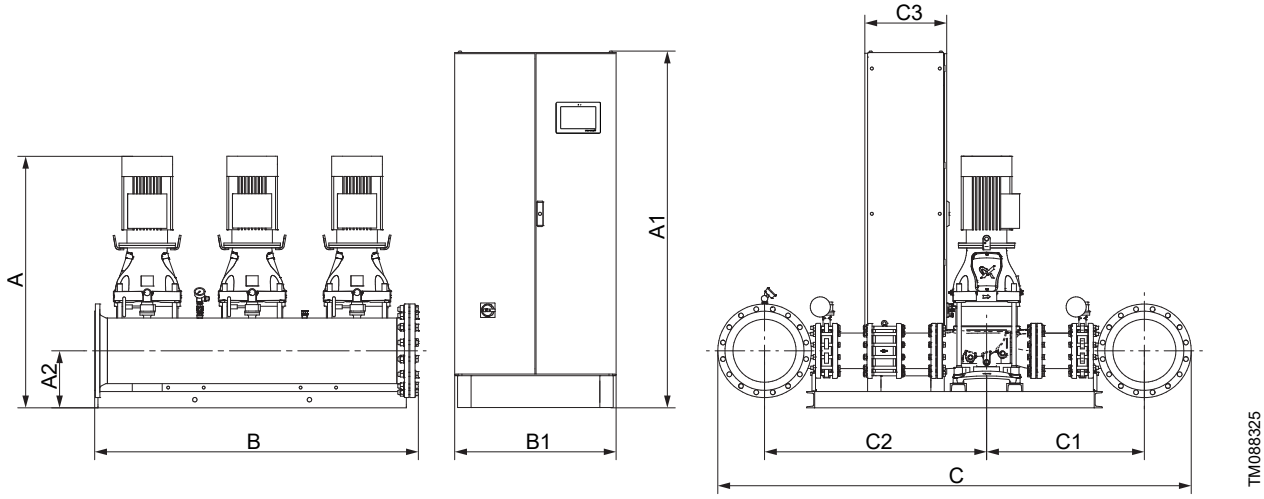

Design GC

Electrical data, dimensions and weights

Number of pumps	Pump type	Motor power [kW]	Motor type	Voltage code	Rated current [A]	Connections	A [mm]	A1 [mm]	A2 [mm]	B [mm]	B1 [mm]	C [mm]	C1 [mm]	C2 [mm]	C3 [mm]	Net weight [kg]	Design
2	CR 255-1-1 [20]	30	•	V1	110.8	DN 300	1670	2000	400	1330	1000	2780	960	1360	400	1821	GC
	CR 255-1-1	55	•	V1	192.8	DN 300	1840	2200	400	1830	1200	2780	960	1360	600	2517	GC
	CR 255-1 [20]	45	•	V1	164.8	DN 300	1790	2200	400	1330	1200	2780	960	1360	500	2272	GC
	CR 255-1	75	•	V1	267.2	DN 300	1910	2200	400	1830	2400	2780	960	1360	500	3112	GC
	CR 255-2-2 [20]	55	•	V1	192.8	DN 300	1960	2200	400	1830	1200	2780	960	1360	600	2547	GC
	CR 255-2-2	110	•	V1	*	DN 300	2150	*	400	1830	*	2780	960	1360	*	*	GC
	CR 255-2 [20]	75	•	V1	267.2	DN 300	2040	2200	400	1830	2400	2780	960	1360	500	3142	GC
	CR 255-2-1	110	•	V1	*	DN 300	2150	*	400	1830	*	2780	960	1360	*	*	GC
	CR 255-3-2 [20]	90	•	V1	*	DN 300	2270	*	400	1830	*	2780	960	1360	*	*	GC
3	CR 255-1-1 [20]	30	•	V1	165.8	DN 350	1670	2200	400	1980	1200	2870	975	1375	500	2690	GC
	CR 255-1-1	55	•	V1	289.2	DN 400	1840	2000	400	2730	2000	2930	975	1375	400	3981	GC
	CR 255-1 [20]	45	•	V1	247.2	DN 350	1790	2000	400	1980	2000	2870	975	1375	400	3501	GC
	CR 255-1	75	•	V1	400.2	DN 400	1910	2200	400	2730	2400	2930	975	1375	500	4437	GC
	CR 255-2-2 [20]	55	•	V1	289.2	DN 350	1960	2000	400	2730	2000	2870	975	1375	400	3946	GC
	CR 255-2-2	110	•	V1	*	DN 400	2150	*	400	2730	*	2930	975	1375	*	*	GC
	CR 255-2 [20]	75	•	V1	400.2	DN 350	2040	2200	400	2730	2400	2870	975	1375	500	4402	GC
	CR 255-2-1	110	•	V1	*	DN 400	2150	*	400	2730	*	2930	975	1375	*	*	GC
	CR 255-3-2 [20]	90	•	V1	*	DN 350	2270	*	400	2730	*	2870	975	1375	*	*	GC
4	CR 255-1-1 [20]	30	•	V1	221.2	DN 450	1670	2000	400	2640	2000	3090	1025	1425	400	4135	GC
	CR 255-1-1	55	•	V1	385.7	DN 450	1840	2000	400	3640	2400	3090	1025	1425	500	5394	GC
	CR 255-1 [20]	45	•	V1	329.2	DN 450	1790	2000	400	2640	2400	3090	1025	1425	500	4852	GC
	CR 255-1	75	•	V1	534	DN 450	1910	2200	400	3640	3600	3090	1025	1425	500	6292	GC
	CR 255-2-2 [20]	55	•	V1	385.7	DN 450	1960	2000	400	3640	2400	3090	1025	1425	500	5454	GC
	CR 255-2-2	110	•	V1	*	DN 450	2150	*	400	3640	*	3090	1025	1425	*	*	GC
	CR 255-2 [20]	75	•	V1	534	DN 450	2040	2200	400	3640	3600	3090	1025	1425	500	6352	GC
	CR 255-2-1	110	•	V1	*	DN 450	2150	*	400	3640	*	3090	1025	1425	*	*	GC
	CR 255-3-2 [20]	90	•	V1	*	DN 450	2270	*	400	3640	*	3090	1025	1425	*	*	GC

Number of pumps	Pump type	Motor power [kW]	Motor type	Voltage code	Rated current [A]	Connections	A [mm]	A1 [mm]	A2 [mm]	B [mm]	B1 [mm]	C [mm]	C1 [mm]	C2 [mm]	C3 [mm]	Net weight [kg]	Design
5	CR 255-1-1 [20]	30	●	V1	276.2	DN 500	1670	2000	400	3300	2400	3225	1055	1455	400	5111	GC
	CR 255-1-1	55	●	V1	482	DN 500	1840	2000	400	4550	3000	3225	1055	1455	400	6938	GC
	CR 255-1 [20]	45	●	V1	412	DN 500	1790	2000	400	3300	3000	3225	1055	1455	400	6228	GC
	CR 255-1	75	●	V1	667	DN 500	1910	2400	400	4550	3600	3225	1055	1455	600	7780	GC
	CR 255-2-2 [20]	55	●	V1	482	DN 500	1960	2000	400	4550	3000	3225	1055	1455	400	7013	GC
	CR 255-2-2	110	●	V1	*	DN 500	2150	*	400	4550	*	3225	1055	1455	*	*	GC
	CR 255-2 [20]	75	●	V1	667	DN 500	2040	2400	400	4550	3600	3225	1055	1455	600	7855	GC
	CR 255-2-1	110	●	V1	*	DN 500	2150	*	400	4550	*	3225	1055	1455	*	*	GC
	CR 255-3-2 [20]	90	●	V1	*	DN 500	2270	*	400	4550	*	3225	1055	1455	*	*	GC
6	CR 255-1-1 [20]	30	●	V1	331.2	DN 500	1670	2000	400	5250	2400	3225	1055	1455	400	5883	GC
	CR 255-1-1	55	●	V1	578	DN 500	1840	2000	400	7250	3600	3225	1055	1455	500	7976	GC
	CR 255-1 [20]	45	●	V1	494	DN 500	1790	2000	400	5250	3600	3225	1055	1455	500	7184	GC
	CR 255-1	75	●	V1	800.8	DN 500	1910	2400	400	7250	4800	3225	1055	1455	600	9329	GC
	CR 255-2-2 [20]	55	●	V1	578	DN 500	1960	2000	400	7250	3600	3225	1055	1455	500	8066	GC
	CR 255-2-2	110	●	V1	*	DN 500	2150	*	400	7250	*	3225	1055	1455	*	*	GC
	CR 255-2 [20]	75	●	V1	800.8	DN 500	2040	2400	400	7250	4800	3225	1055	1455	600	9419	GC
	CR 255-2-1	110	●	V1	*	DN 500	2150	*	400	7250	*	3225	1055	1455	*	*	GC
	CR 255-3-2 [20]	90	●	V1	*	DN 500	2270	*	400	7250	*	3225	1055	1455	*	*	GC

[20] For 50 Hz pumps.

Legend

- ● Three-phase motors
- * On request

Explanation

- Motor power is the power per pump.
- Rated current: Additional current applies for the control circuit depending on design.
- Voltage code, V1: 3 × 400 V ± 5 %, 50 Hz, N, PE.
- Design GC: The pumps and the control panel are mounted on their own base frames. The base frames are separated. The control panel is for floor mounting and can be placed up to 3 meters from the pumps.
- Dimensions may vary by ± 10 mm.

9. Optional equipment

All optional equipment must be specified when ordering the system, as it must be installed at the factory before delivery. See options in the type key.

The options listed below are not all available for all markets.

Option		Description	Location	Options (type key for Hydro MPC)
Standard hydraulics, PN 16		This is the standard option for Hydro MPC hydraulics rated for PN 16 as a minimum.	System	A
Pilot pump		The pilot pump takes over operation from main pumps during periods of low consumption. The pilot pump can deliver the necessary flow and thereby maintain high efficiency. The typically pump size is 25 % of the main pump. Pilot pumps are available for Hydro MPC-E control variant.	System	B
Bypass connection	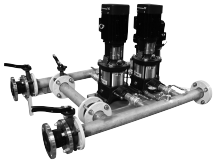	The bypass connection is a pipe diversion consisting of a manifold, two isolating valves and a non-return valve. The bypass connection allows water to bypass the pumps from the inlet to the outlet manifold.	System	C
Non-return valve on the inlet side		As standard, the non-return valves are fitted on the outlet side of the pumps of the system. In installations with suction lift, we recommend that you install non-return valves on the inlet side of the pumps to prevent dry running.	Inlet side	D
Elbow manifold	-	Manifolds with elbows in one end can reduce dead ends. On request.	Inlet or outlet side	E
No inlet manifold		Depending on the application or installation site, the system can be ordered without inlet manifold.	-	F
Diaphragm tank		In buildings it is usually necessary to install a diaphragm tank on the outlet side of the system. As standard, the system is designed for a maximum system pressure of 16 bar. A standard system includes pressure transmitters and one gauge with a rated pressure of 16 bar (full scale). Systems designed for PN 16 can install a diaphragm tank up to 33 liters on the outlet manifold.	On outlet manifold Up to 33 l	G
Redundant inlet-pressure sensor		The system must be protected against dry running. The inlet conditions determine the type of dry-running protection. • If the system draws water from a tank or a well, select a level switch or an electrode relay for dry-running protection. • If the system has an inlet pressure, select a pressure transmitter or a pressure switch for dry-running protection. As standard, the system includes one inlet-pressure sensor for dry-running protection. For further description, see the section on dry-running protection.	On inlet manifold	H

Option		Description	Location	Options (type key for Hydro MPC)
Repair switch	-	With a repair switch fitted on the individual pumps of the system, the supply voltage to the pump can be switched off during, for example, repair. One switch per pump. For further description, see the section on repair switch.	On the pump	I
Redundant outlet-pressure sensor		To increase the reliability, a redundant outlet-pressure sensor can be connected as a backup sensor for the primary sensor. The redundant outlet-pressure sensor must be of the same type as the primary sensor. For further description, see the section on redundant outlet-pressure sensor.	-	J
One free pump position	-	Systems with one free pump position are available for the system with three to six pumps. The systems, including the control panel, are prepared for the future pump.	-	K
Two free pump positions		Systems with two free pump positions are available for the system with four to six pumps. The systems, including the control panel, are prepared for the future pumps.	-	L
Three free pump positions		Systems with three free pump positions are available for the system with 5 to 6 pumps. The systems, including the control panel, are prepared for the future pumps.	-	M
PN 10 pressure rating	-	With this option, the rated pressure of the Hydro MPC hydraulics is at least PN 10.	-	N
PN 25 pressure rating	-	With this option, the rated pressure of the Hydro MPC hydraulics is at least PN 25.	-	O
PN 40 pressure rating	-	With this option, the rated pressure of the Hydro MPC hydraulics is at least PN 40.	-	Q
Low pre-pressure (NPSH)	-	The systems are available with CR low-NPSH pumps designed to eliminate the risk of cavitation and ensure a stable and reliable operation. The CR low-NPSH has a special inlet design that reduces the NPSH value required by the pump and prevents erosion and damage to the pump, pipes and valves. The improved inlet design may expose the low-NPSH pump to more stress than conventional pumps, but it does not affect the stability of operation. The CR low-NPSH pump reduces excess pressure itself and does not require any additional tank to provide supplementary pressure. Systems are available on request with CR low-NPSH from CR, CRI 3 to CR, CRI 20 and CRN, CRNE from CRN, CRNE 3 to CRN, CRNE 64.	-	P
Non standard RPM	-	Pumps with non standard RPM.	-	R
Customized variant	-	Customized systems can be produced on request. For further information contact Grundfos.	-	S
Certificate	-	For further information, contact Grundfos.	-	T
Undersized motor		We recommend a Hydro system with undersized motors if operating conditions deviate from those stated in the Hydro MPC data booklet and Grundfos Product Center. We especially recommend undersized motors if the duty point is constant and the flow rate is significantly lower than the maximum recommended flow rate.	-	U
Standard controls with options		See the installation and operating instructions of GENIECON PANEL.	-	V

Option		Description	Location	Options (type key for Hydro MPC)
Customized controls		See the installation and operating instructions of GENIECON PANEL.	-	W
More than 3 options	-	More than three options are selected on request.	-	X
Control panel with double door	-	Control panel with double door is available on request.	-	Y

Related information

Type key

Redundant inlet-pressure sensor

Repair switch

Redundant outlet-pressure sensor

Redundant inlet-pressure sensor

Description	Range [bar]
Electrode relay, without electrodes and electrode cable [21]	-
Redundant inlet-pressure sensor [22]	-1-5
	0-1
	0-4
	0-6
	0-10
	0-16
	0-25
	0-40

[21] This also applies to level switches and initially connected to digital input DI2. However, it can be connected to any other available configured digital input.

[22] The redundant inlet-pressure sensor is initially connected to analog input AI2 by default. However, it can be connected to any other available configured analog input.

Repair switch

Description	Motor current and starting method
Repair switch	≤ 16 A, DOL
	16-25 A, DOL
	25-40 A, DOL
	40-63 A, DOL
	63-80 A, DOL
	80-100 A, DOL
	100-125 A, DOL
	125-175 A, DOL
	175-250 A, DOL
	≤ 16 A, Y/Δ
	16-25 A, Y/Δ
	25-40 A, Y/Δ
	40-63 A, Y/Δ
	63-80 A, Y/Δ
	80-100 A, Y/Δ
	100-125 A, Y/Δ
	125-175 A, Y/Δ
	175-250 A, Y/Δ

Redundant outlet-pressure sensor

Description	Range [bar]
Redundant outlet-pressure sensor [23]	0-10
	0-16
	0-25
	0-40

[23] The redundant outlet-pressure sensor is initially connected to analog input AI3 by default. However, it can be connected to any other available configured analog input.

10. Accessories

All accessories can be fitted to the system after delivery.

Option		Description
Diaphragm tank		A diaphragm tank can be installed on the outlet side of the system. The diaphragm tanks are separate tanks without valve, fittings and pipes. For further data, see the section on diaphragm tank.
Adjustable vibration damper		The vibration damper reduces any vibrations from the system to the floor allowing the system to be height-adjusted by ± 20 mm. For further description, see the section on adjustable vibration damper.
Grundfos GO	-	Grundfos GO is used for communication with the pumps. • For systems from 0.37 to 2.2 kW, Grundfos GO communicates with the pump via wireless radio or infrared communication. • For systems from 3 to 26 kW, Grundfos GO communicates with the pump via the built-in Bluetooth module. Grundfos GO can also be used for communication with GENIECON UNIT for firmware update, creating commissioning reports, etc. Various Grundfos GO variants are available.

Related information

Diaphragm tank

Adjustable vibration damper

Diaphragm tank

Diaphragm tank, 10 bar

Capacity [liters]	Connection	Product number
8	G 3/4	96528335
12	G 3/4	96528336
18	G 3/4	96528337
24	G 1	96528339
33	G 1	96528340
60	G 1	96528341
80	G 1	96528342
100	G 1	99082696
150	G 1	99082697
200	G 1 1/4	99082698
300	G 1 1/4	99082699
500	G 1 1/4	99082700
750	G 2	99082701
1000	G 2	99082702
1500	G 2	99082703
2000	G 2	99082704
3000	G 2	99082705

Diaphragm tank, 16 bar

Capacity [liters]	Connection	Product number
8	G 3/4	96573347
12	G 3/4	96573348
25	G 3/4	96573349
80	G 1	96603420
100	G 1	99082706
150	G 1	99082707
200	G 1 1/4	99082708
300	G 1 1/4	99082709
500	G 1 1/4	99082710
750	G 2	99082711
1000	G 2	99082712
1500	G 2	99082713
2000	G 2	99082714
3000	G 2 1/2	99082715

Adjustable vibration damper

Description	Pump	Product number
Vibration damper	CR, CRI, CRE, CRIE 3 and 5	96412344
	CR, CRI, CRE, CRIE 10 to 20	96412345
	CR, CRE 32 to 90	96412347

The product number covers one vibration damper.

11. Product manuals

Title	Document type	QR code	Link	Publication number
CR, CRI, CRN (50 Hz)	Data booklet		http://net.grundfos.com/qr/i/99301179	99301179
CR, CRI, CRN (60 Hz)	Data booklet		http://net.grundfos.com/qr/i/99301180	99301180
CR, CRI, CRN, CRT, CRE, CRIE, CRNE, CRTE custom-built pumps	Data booklet		http://net.grundfos.com/qr/i/96486346	96486346
CRE, CRIE, CRNE	Data booklet		http://net.grundfos.com/qr/i/98423696	98423696
CR, CRI, CRN	Installation and operating instructions		http://net.grundfos.com/qr/i/96462123	96462123
CR, CRN 95-255	Installation and operating instructions		http://net.grundfos.com/qr/i/99078486	99078486
CR, CRN 95-255	Service instructions		http://net.grundfos.com/qr/i/99233360	99233360
Hydro MPC	Installation and operating instructions		http://net.grundfos.com/qr/i/93242156	93242156
Hydro MPC	Quick guide		http://net.grundfos.com/qr/i/93242173	93242173
GENIECON PANEL	Installation and operating instructions		http://net.grundfos.com/qr/i/92956760	92956760
Tank calculation in E systems	-		http://net.grundfos.com/qr/i/92845021	92845021

12. Hydro Booster family systems

Systems	Data and features	
Hydro MPC GR-1030662	Max. head	146 m
	Max. flow rate	1836 m^3/h
	Max. operating temperature	16 bar
	Liquid temperature	5-60 °C
	Number of pumps	2-6
	Pump type	CR, CRI, CRE, CRIE
	Features	• 2-6 pumps in cascade • Additional pilot pump • Easy installation and startup • Large user-friendly display • Energy-optimized control • Data communication • Perfect constant pressure • Application-optimized software
Hydro Multi-E 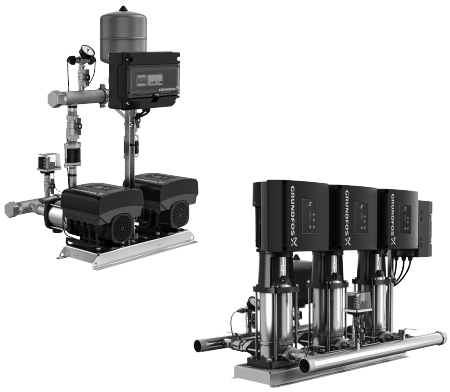 TM084962	Max. head	145 m
	Max. flow rate	144 m^3/h
	Max. operating temperature	16 bar
	Liquid temperature	5-60 °C
	Number of pumps	2-4
	Pump type	CRE, CRIE, CME
	Features	• 2-4 pumps in cascade • Plug-and-pump solution • Easy to control • Low energy consumption • Proportional pressure • Data communication • Multi-pump function • Perfect constant pressure • Soft pressure build-up • Redundant sensor

13. App for downloading

Grundfos GO

The Grundfos GO is the mobile toolbox for professional users on the go. It is the most comprehensive platform for mobile pump control and pump selection, including sizing, replacement and documentation. It offers intuitive, handheld assistance and access to Grundfos online tools, and it saves valuable time for reporting and data collection.

For iOS devices, download the application from the App Store. For Android mobiles, download the application from the Google play.

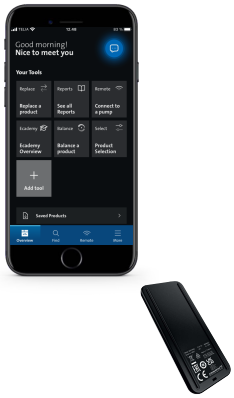

GET IT ON Google play

Available on the App Store

Grundfos GO Link

The Grundfos GO Link is only available at the Grundfos Product Center.

14. Grundfos Product Center

Online search and sizing tool to help you make the right choice.
From the international view, you can select your specific country to view the product range available to you.
International view: *http://product-selection.grundfos.com*

All the information you need in one place

Performance curves, technical specifications, pictures, dimensional drawings, motor curves, wiring diagrams, spare parts, service kits, 3D drawings, documents, system parts. The Product Center displays any recent and saved items - including complete projects - right on the main page.

Downloads

On the product pages, you can download installation and operating instructions, data booklets, service instructions, etc., in PDF format.

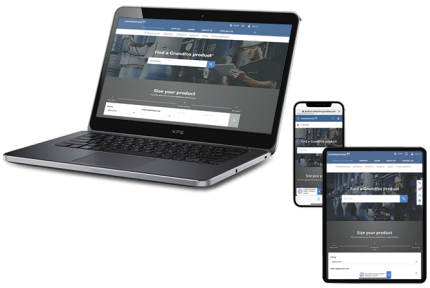

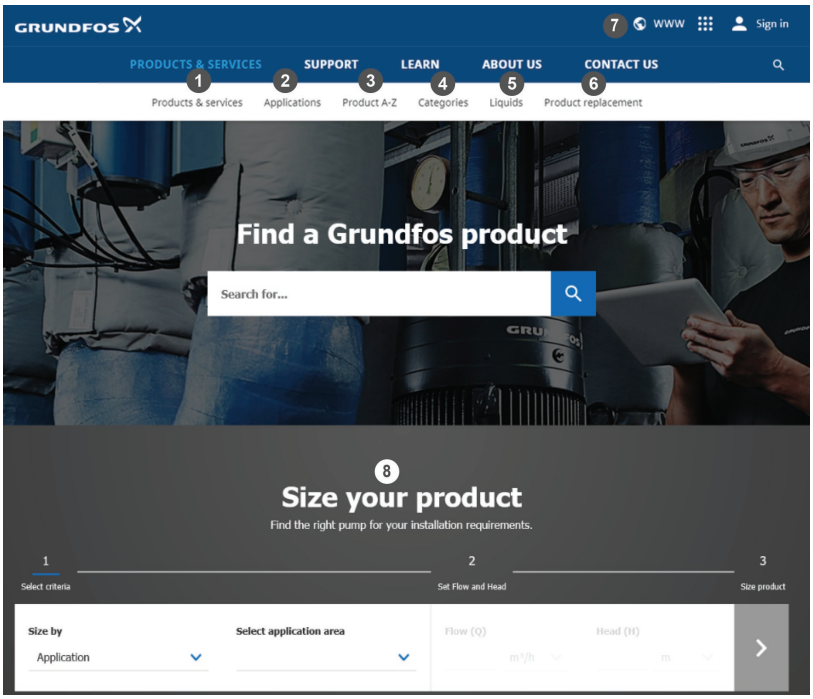

When you select your country, you will see the menus below. Note that some menus may not be available depending on the country.
Example: *https://product-selection.grundfos.com/uk*

Pos.	Description
1	**Products & services** enables you to find products and documents by typing a product number or name into the search field.
2	**Applications** enables you to choose an application to see how Grundfos can help you design and optimise your system.
3	**Products A-Z** enables you to look through a list of all the Grundfos products.
4	**Categories** enables you to look for a product category.
5	**Liquids** enables you to find pumps designed for aggressive, flammable or other special liquids.
6	**Product replacement** enables you to find a suitable replacement.
7	**WWW** enables you to select the country, which changes the language, the available product range and the structure of the website.
8	**Sizing** enables you to size a product based on your application and operating conditions.

15. Document quality feedback

To provide feedback about this document, use your smart device to scan the QR code.

FEEDBACK93242159

Click here to submit your feedback

Trademarks displayed in this material, including but not limited to Grundfos and the Grundfos logo, are registered trademarks owned by The Grundfos Group. © 2025 Grundfos Holding A/S, all rights reserved.

93242159 **09.2025**
ECM: 1406151

GRUNDFOS Holding A/S
Poul Due Jensens Vej 7
DK-8850 Bjerringbro
Tel: +45 87 50 14 00
www.grundfos.com

GRUNDFOS