SCALA 1

Service Kit Catalogue

GRUNDFOS

Table of contents

1. SCALA1 3
Identification. 3
SCALA 1 4

1. SCALA1

Identification

Nameplate for SCALA1

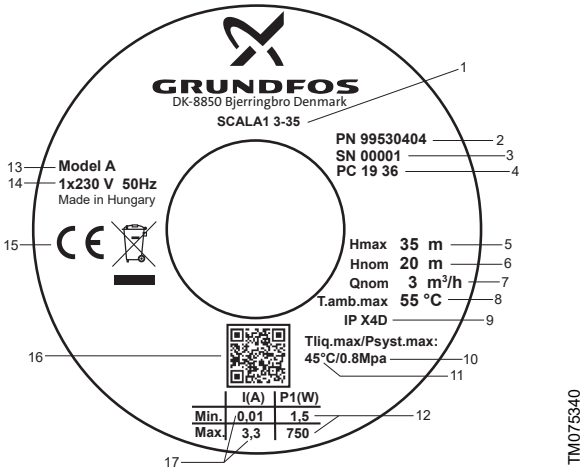

Example of nameplate

Pos.	Description
1	Type designation
2	Product number
3	Serial number
4	Production code (year and week)
5	Max. head
6	Nominal head
7	Nominal flow rate
8	Max. ambient temperature
9	Enclosure class
10	Max. operating pressure
11	Max. liquid temperature
12	Minimum and maximum rated power
13	Model
14	Voltage and frequency
15	Approvals
16	Product QR code
17	Minimum and maximum rated current

Type key for SCALA1

Example:

SCALA1 . 5- . 25 . 1x230V . 50 Hz . SCHUKO

Code	Designation
SCALA1	Type range
3 5	Max. flow rate [m^3/h]
25 35 45 55	Max. head [m]
1 × 230V 1 × 115V	Voltage [V]
50 Hz 60 Hz	Frequency [Hz]
Schuko (Type E/F) No plug Thailand (Type O) Australia (Type I) UK (Type G) US (Type NEMA 5-15, NEMA 6-15) Argentina (Type I)	Plug type

SCALA 1

Kit, capacitor - 230V, 50/60Hz

Pos.	Pump size	3-25 3-35 5-25	3-45	5-55
	Kit No.	99743297	99743974	99744020
161	Capacitor 10 µF	1	-	-
	Capacitor 12.5 µF	-	1	-
	Capacitor 16 µF	-	-	1
-	Connect cable	2	2	2

Kit, fitting NPT1 and union, composite

Pos.	Kit No.	99742583
100	Union nut 2"	1
100a	Fitting NPT1	1
100b	O-ring D40.0 x 4.00	1

Kit, fitting R1 and union, composite

Pos.	Kit No.	99742585
100	Union nut 2"	1
100a	Fitting R1	1
100b	O-ring D40.0 x 4.00	1

Kit, hydraulic - 50 Hz

Pos.	Pump size	3-25	5-25	3-35	3-45	5-55
	Kit No.	99742569	99775519	99775515	99742572	99742573
3	Final diffuser cap	1	1	1	1	1
4a	Impeller diffuser	2	2	3	3	4
4	Impeller diffuser body	3	3	3	3	3
44	First stage housing	1	1	1	1	1
44a	O-ring	1	1	1	1	1
49	Impeller	2	2	3	3	4
66	Washer ∅17x1,6 SS	1	1	1	1	1
67	Lock nut, M8	1	1	1	1	1
37	O-ring	1	1	1	1	1
45	Forward bushing for impeller	2	2	3	3	4
45a	Backward bushing for impeller	2	2	3	3	4
45b	Impeller spacer	1	1	-	-	-

Kit, hydraulic - 60 Hz

Pos.	Pump size	3-25	3-35	3-45	5-25	5-55
	Kit No.	99742537	99742570	99742568	99742567	99775515
3	Final diffuser cap	1	1	1	1	1
4a	Impeller diffuser	2	2	3	2	3
4	Impeller diffuser body	3	3	3	3	3
44	First stage housing	1	1	1	1	1
44a	O-ring	1	1	1	1	1
49	Impeller	2	2	3	2	3
66	Washer ∅17x1,6 SS	1	1	1	1	1
67	Lock nut, M8	1	1	1	1	1
37	O-ring	1	1	1	1	1
45	Forward bushing for impeller	2	2	3	2	3
45a	Backward bushing for impeller	2	2	3	2	3
45b	Impeller spacer	1	1	-	1	1

Kit, motor - 230 V, 50/60 Hz

Pos.	Pump size	3-25	5-25	3-35	3-45	5-55
	Kit No.		99743077		99743135	99743138
150	Motor complete		1		1	1
37	O-ring		1		1	1
52	O-ring		1		1	1
53	O-ring		1		1	1
44a	O-ring		1		1	1
169	Plug		1		1	1

Kit, motor - 115 V, 60 Hz

Pos.	Pump size	3-25	3-35	5-25	3-45	5-55
	Kit No.		99743139		99743140	99743141
150	Motor complete		1		1	1
37	O-ring		1		1	1
52	O-ring		1		1	1
53	O-ring		1		1	1
44a	O-ring		1		1	1
169	Plug		1		1	1

Kit, O-ring

Pos.	Kit No.	99742581
11	O-ring	1
11a	O-ring	1
100b	O-ring	2
65b	O-ring	3
178a	O-ring	1
174b	O-ring	1
44a	O-ring	1
37	O-ring	1
150b	O-ring	1
53	O-ring	1
52	O-ring	1

Kit, O-ring, SCALA1 5-55

Pos.	Kit No.	99755211
11	O-ring	1
11a	O-ring	1
100b	O-ring	2
65b	O-ring	3
178a	O-ring	1
174b	O-ring	1
44a	O-ring	1
37	O-ring	1
150b	O-ring	1
53	O-ring	1
52	O-ring	1

Kit, plugs and valves

Pos.	Kit No.	99743153
65a	Non-return valve discharge, complete.	1
65b	O-ring	1
7	Drain plug	1
11a	O-ring	1

Kit, pressure switch

Pos.	Pump size	3-25	5-25	3-35	5-35	3-45	5-55
	Kit No.	99742575		99742576		99742578	99742580
174a	Pressure switch w. cable cpl.	1		1		1	1
174b	O-ring	1		1		1	1
174c	Proximity sensor	1		1		1	1

Kit, Printed Circuit Board (PCB) - 230 V

Pos.	Kit No.	99779291
181	PCB	1
181b	Lower enclosure	1

Kit, Printed Circuit Board (PCB) - 115 V

Pos.	Kit No.	99779331
181	PCB	1
181b	Lower enclosure	1

Kit, rear plugs

Pos.	Kit No.	99743157
169a	Condensate discharge cup	2
169	Rear plug	1

Kit, shaft seal

Pos.	Kit No.	99742574
103	Shaft seal, stationary part	1
104	Shaft seal, rotating part	1
44a	O-ring	1
37	O-ring	1

Spare parts

Pos.	Description	Pump size	Product no.
161	Capacitor 35 µF - 115V, 60Hz	3-25	99744023
		3-35	
		3-45	
		5-25	
	Capacitor 50 µF - 115V, 60Hz	5-55	99743298
181c	Connection module	3-25	99743166
		3-35	
		3-45	
		5-25	
		5-55	99743167
156b	Motor stool	3-25	99743291
		3-35	
		3-45	
		5-25	
		5-55	99743292
180	Motor housing	3-25	99743293
		3-35	
		3-45	
		5-25	
		5-55	99743294
2	Pump housing		99743295
164	Terminal cover		99743296
41	Membrane for pressure tank		99743164

Bulk, drain plug

Pos.	Kit No.	99016065
7	Drain plug	10

Bulk, O-ring for drain plug

Pos.	Bulk No.	99743300
11a	O-ring	10

Exploded view for SCALA1 3-25, 5-25

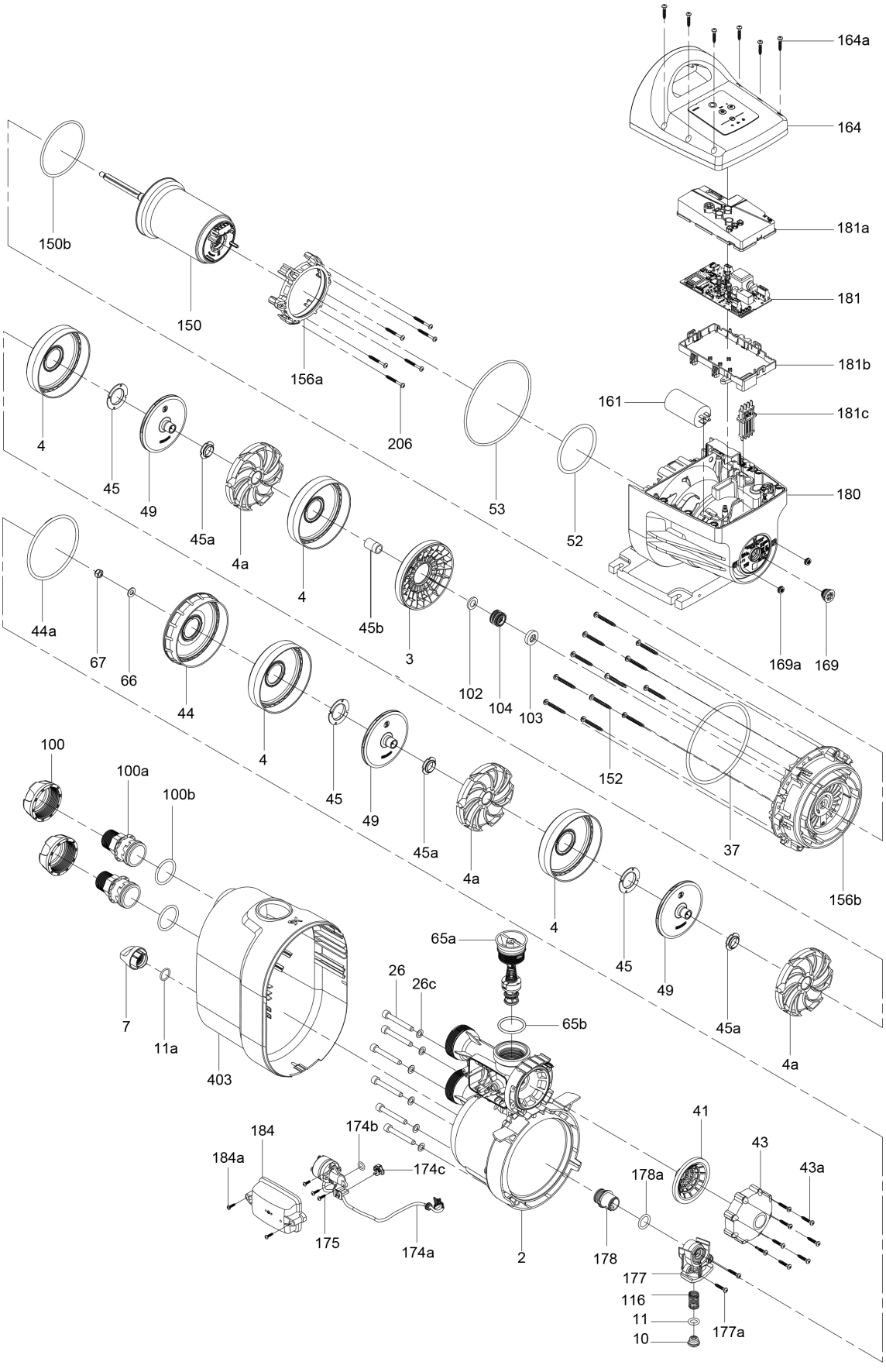

Exploded view for SCALA1 3-35, 3-45, 5-55

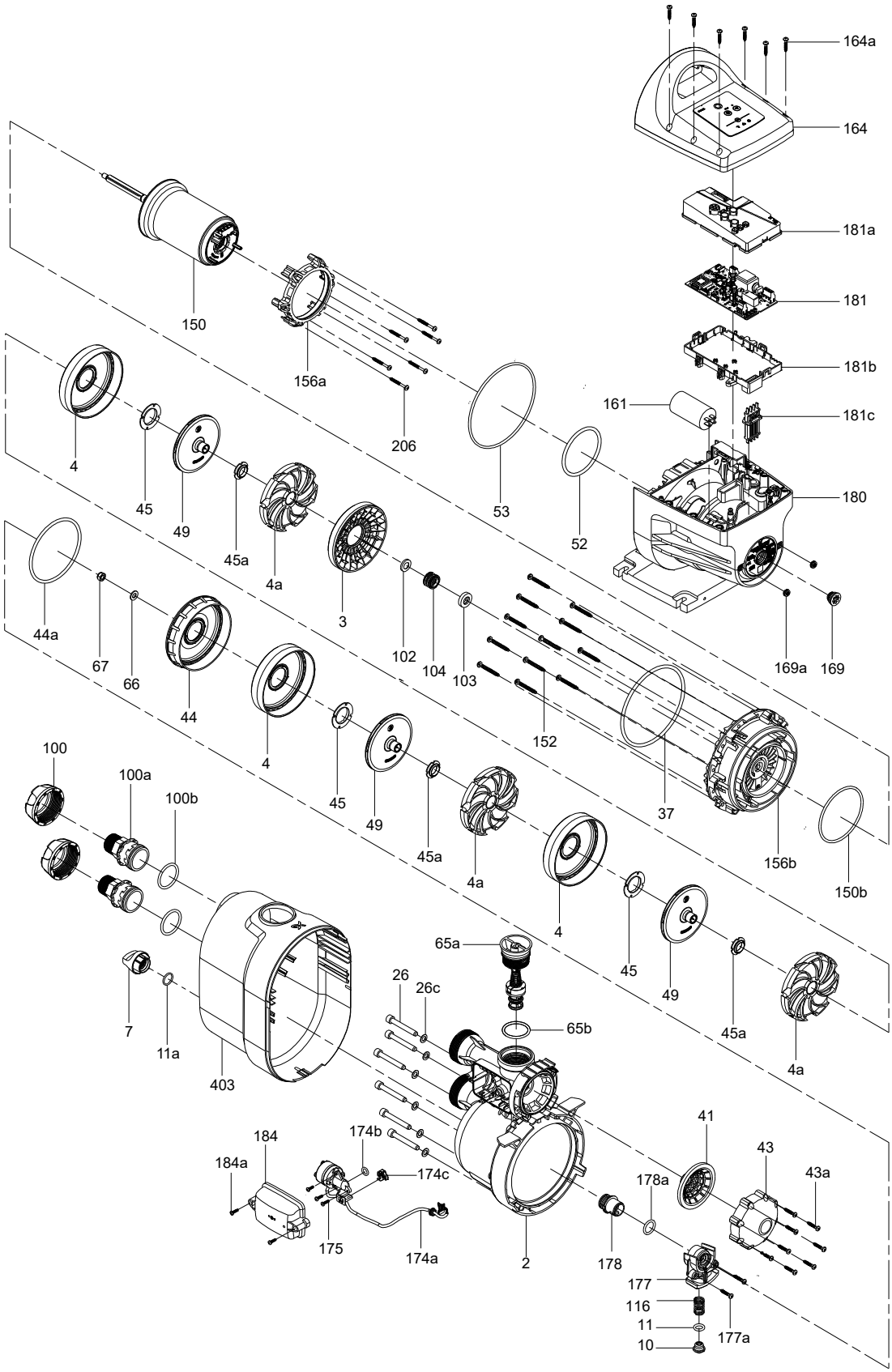

Argentina
Bombas GRUNDFOS de Argentina S.A.
Ruta Panamericana km. 37.500industin
1619 - Garín Pcia. de B.A.
Tel.: +54-3327 414 444
Fax: +54-3327 45 3190

Australia
GRUNDFOS Pumps Pty. Ltd.
P.O. Box 2040
Regency Park
South Australia 5942
Tel.: +61-8-8461-4611
Fax: +61-8-8340-0155

Austria
GRUNDFOS Pumpen Vertrieb Ges.m.b.H.
Grundfosstraße 2
A-5082 Grödig/Salzburg
Tel.: +43-6246-883-0
Fax: +43-6246-883-30

Belgium
N.V. GRUNDFOS Bellux S.A.
Boomsesteenweg 81-83
B-2630 Aartselaar
Tel.: +32-3-870 7300
Fax: +32-3-870 7301

Bosnia and Herzegovina
GRUNDFOS Sarajevo
Zmaja od Bosne 7-7A
BiH-71000 Sarajevo
Tel.: +387 33 592 480
Fax: +387 33 590 465
www.ba.grundfos.com
E-mail: grundfos@bih.net.ba

Brazil
BOMBAS GRUNDFOS DO BRASIL
Av. Humberto de Alencar Castelo Branco, 630
CEP 09850 - 300
São Bernardo do Campo - SP
Tel.: +55-11 4393 5533
Fax: +55-11 4343 5015

Bulgaria
Grundfos Bulgaria EOOD
Slatina District
Iztochna Tangenta street no. 100
BG - 1592 Sofia
Tel.: +359 2 49 22 200
Fax: +359 2 49 22 201
E-mail: bulgaria@grundfos.bg

Canada
GRUNDFOS Canada inc.
2941 Brighton Road
Oakville, Ontario
L6H 6C9
Tel.: +1-905 829 9533
Fax: +1-905 829 9512

China
GRUNDFOS Pumps (Shanghai) Co. Ltd.
10F The Hub, No. 33 Suhong Road
Minhang District
Shanghai 201106 PRC
Tel.: +86 21 612 252 22
Fax: +86 21 612 253 33

Colombia
GRUNDFOS Colombia S.A.S.
Km 1.5 vía Siberia-Cota Conj. Potrero Chico,
Parque Empresarial Arcos de Cota Bod. 1A.
Cota, Cundinamarca
Tel.: +57(1)-2913444
Fax: +57(1)-8764586

Croatia
GRUNDFOS CROATIA d.o.o.
Buzinski prilaz 38, Buzin
HR-10010 Zagreb
Tel.: +385 1 6595 400
Fax: +385 1 6595 499
www.hr.grundfos.com

Czech Republic
GRUNDFOS Sales Czechia and Slovakia s.r.o.
Čajkovského 21
779 00 Olomouc
Tel.: +420-585-716 111

Denmark
GRUNDFOS DK A/S
Martin Bachs Vej 3
DK-8850 Bjerringbro
Tel.: +45-87 50 50 50
Fax: +45-87 50 51 51
E-mail: info_GDK@grundfos.com
www.grundfos.com/DK

Estonia
GRUNDFOS Pumps Eesti OÜ
Peterburi tee 92G
11415 Tallinn
Tel.: + 372 606 1690
Fax: + 372 606 1691

Finland
OY GRUNDFOS Pumput AB
Trukkikuja 1
FI-01360 Vantaa
Tel.: +358-(0) 207 889 500

France
Pompes GRUNDFOS Distribution S.A.
Parc d'Activités de Chesnes
57, rue de Malacombe
F-38290 St. Quentin Fallavier (Lyon)
Tel.: +33-4 74 82 15 15
Fax: +33-4 74 94 10 51

Germany
GRUNDFOS GMBH
Schlüterstr. 33
40699 Erkrath
Tel.: +49-(0) 211 929 69-0
Fax: +49-(0) 211 929 69-3799
E-mail: infoservice@grundfos.de
Service in Deutschland:
kundendienst@grundfos.de

Greece
GRUNDFOS Hellas A.E.B.E.
20th km. Athinon-Markopoulou Av.
P.O. Box 71
GR-19002 Peania
Tel.: +0030-210-66 83 400
Fax: +0030-210-66 46 273

Hong Kong
GRUNDFOS Pumps (Hong Kong) Ltd.
Unit 1, Ground floor, Siu Wai industrial Centre
29-33 Wing Hong Street & 68 King Lam Street, Cheung Sha Wan
Kowloon
Tel.: +852-27861706 / 27861741
Fax: +852-27858664

Hungary
GRUNDFOS South East Europe Kft.
Tópark u. 8
H-2045 Törökbálint
Tel.: +36-23 511 110
Fax: +36-23 511 111

India
GRUNDFOS Pumps India Private Limited
118 Old Mahabalipuram Road
Thoraipakkam
Chennai 600 097
Tel.: +91-44 2496 6800

Indonesia
PT GRUNDFOS Pompa
Graha intirub Lt. 2 & 3
Jln. Cililitan Besar No.454. Makasar, Jakarta Timur
ID-Jakarta 13650
Tel.: +62 21-469-51900
Fax: +62 21-460 6910 / 460 6901

Ireland
GRUNDFOS (Ireland) Ltd.
Unit A, Merrywell Business Park
Ballymount Road Lower
Dublin 12
Tel.: +353-1-4089 800
Fax: +353-1-4089 830

Italy
GRUNDFOS Pompe Italia S.r.l.
Via Gran Sasso 4
I-20060 Truccazzano (Milano)
Tel.: +39-02-95838112
Fax: +39-02-95309290 / 95838461

Japan
GRUNDFOS Pumps K.K.
1-2-3, Shin-Miyakoda, Kita-ku
Hamamatsu
431-2103 Japan
Tel.: +81 53 428 4760
Fax: +81 53 428 5005

Kazakhstan
Grundfos Kazakhstan LLP
7' Kyz-Zhibek Str., Kok-Tobe micr.
KZ-050020 Almaty Kazakhstan
Tel.: +7 (727) 227-98-55/56

Korea
GRUNDFOS Pumps Korea Ltd.
6th Floor, Aju Building 679-5
Yeoksam-dong, Kangnam-ku, 135-916
Seoul, Korea
Tel.: +82-2-5317 600
Fax: +82-2-5633 725

Latvia
SIA GRUNDFOS Pumps Latvia
Deglava biznesa centrs
Augusta Deglava ielā 60
LV-1035, Rīga,
Tel.: + 371 714 9640, 7 149 641
Fax: + 371 914 9646

Lithuania
GRUNDFOS Pumps UAB
Smolensko g. 6
LT-03201 Vilnius
Tel.: + 370 52 395 430
Fax: + 370 52 395 431

Malaysia
GRUNDFOS Pumps Sdn. Bhd.
7 Jalan Peguam U1/25
Glenmarie industrial Park
40150 Shah Alam, Selangor
Tel.: +60-3-5569 2922
Fax: +60-3-5569 2866

Mexico
Bombas GRUNDFOS de México S.A. de C.V.
Boulevard TLC No. 15
Parque industrial Stiva Aeropuerto
Apodaca, N.L. 66600
Tel.: +52-81-8144 4000
Fax: +52-81-8144 4010

Netherlands
GRUNDFOS Netherlands
Veluwezoom 35
1326 AE Almere
Postbus 22015
1302 CA ALMERE
Tel.: +31-88-478 6336
Fax: +31-88-478 6332
E-mail: info_gnl@grundfos.com

New Zealand
GRUNDFOS Pumps NZ Ltd.
17 Beatrice Tinsley Crescent
North Harbour Industrial Estate
Albany, Auckland
Tel.: +64-9-415 3240
Fax: +64-9-415 3250

Norway
GRUNDFOS Pumper A/S
Strømsveien 344
Postboks 235, Leirdal
N-1011 Oslo
Tel.: +47-22 90 47 00
Fax: +47-22 32 21 50

Poland
GRUNDFOS Pompy Sp. z o.o.
ul. Klonowa 23
Baranowo k. Poznania
PL-62-081 Przeźmierowo
Tel.: (+48-61) 650 13 00
Fax: (+48-61) 650 13 50

Portugal
Bombas GRUNDFOS Portugal, S.A.
Rua Calvet de Magalhães, 241
Apartado 1079
P-2770-153 Paço de Arcos
Tel.: +351-21-440 76 00
Fax: +351-21-440 76 90

Romania
GRUNDFOS Pompe România SRL
S-PARK BUSINESS CENTER, Clădirea A2, etaj 2
Str. Tipografilor, Nr. 11-15, Sector 1, Cod 013714
Bucuresti, Romania
Tel.: 004 021 2004 100
E-mail: romania@grundfos.ro

Serbia
Grundfos Srbija d.o.o.
Omladinskih brigada 90b
11070 Novi Beograd
Tel.: +381 11 2258 740
Fax: +381 11 2281 769
www.rs.grundfos.com

Singapore
GRUNDFOS (Singapore) Pte. Ltd.
25 Jalan Tukang
Singapore 619264
Tel.: +65-6681 9688
Faxax: +65-6681 9689

Slovakia
GRUNDFOS s.r.o.
Prievozská 4D 821 09 BRATISLAVA
Tel.: +421 2 5020 1426
sk.grundfos.com

Slovenia
GRUNDFOS LJUBLJANA, d.o.o.
Leskoškova 9e, 1122 Ljubljana
Tel.: +386 (0) 1 568 06 10
Fax: +386 (0)1 568 06 19
E-mail: tehnika-si@grundfos.com

South Africa
GRUNDFOS (PTY) LTD
16 Lascelles Drive, Meadowbrook Estate
1609 Germiston, Johannesburg
Tel.: (+27) 10 248 6000
Fax: (+27) 10 248 6002
E-mail: lgradidge@grundfos.com

Spain
Bombas GRUNDFOS España S.A.
Camino de la Fuentecilla, s/n
E-28110 Algete (Madrid)
Tel.: +34-91-848 8800
Fax: +34-91-628 0465

Sweden
GRUNDFOS AB
Box 333 (Lunnagårdsgatan 6)
431 24 Mölndal
Tel.: +46 31 332 23 000
Fax: +46 31 331 94 60

Switzerland
GRUNDFOS Pumpen AG
Bruggacherstrasse 10
CH-8117 Fällanden/ZH
Tel.: +41-44-806 8111
Fax: +41-44-806 8115

Taiwan
GRUNDFOS Pumps (Taiwan) Ltd.
7 Floor, 219 Min-Chuan Road
Taichung, Taiwan, R.O.C.
Tel.: +886-4-2305 0868
Fax: +886-4-2305 0878

Thailand
GRUNDFOS (Thailand) Ltd.
92 Chaloem Phrakiat Rama 9 Road
Dokmai, Pravej, Bangkok 10250
Tel.: +66-2-725 8999
Fax: +66-2-725 8998

Turkey
GRUNDFOS POMPA San. ve Tic. Ltd. Sti.
Gebze Organize Sanayi Bölgesi
Ihsan dede Caddesi
2. yol 200. Sokak No. 204
41490 Gebze/ Kocaeli
Tel.: +90 - 262-679 7979
Fax: +90 - 262-679 7905
E-mail: satis@grundfos.com

Ukraine
ТОВ "ГРУНДФОС УКРАЇНА"
Бізнес Центр Європа
Столичне шосе, 103
м. Київ, 03131, Україна
Tel.: (+38 044) 237 04 00
Fax: (+38 044) 237 04 01
E-mail: ukraine@grundfos.com

United Arab Emirates
GRUNDFOS Gulf Distribution
P.O. Box 16768
Jebel Ali Free Zone, Dubai
Tel.: +971 4 8815 166
Fax: +971 4 8815 136

United Kingdom
GRUNDFOS Pumps Ltd.
Grovebury Road
Leighton Buzzard/Beds. LU7 4TL
Tel.: +44-1525-850000
Fax: +44-1525-850011

U.S.A.
Global Headquarters for WU
856 Koomey Road
Brookshire, Texas 77423 USA
Phone: +1-630-236-5500

Uzbekistan
Grundfos Tashkent, Uzbekistan
The Representative Office of Grundfos Kazakhstan in Uzbekistan
38a, Oybek street, Tashkent
Tel.: (+998) 71 150 3290 / 71 150 3291
Fax: (+998) 71 150 3292

Trademarks displayed in this material, including but not limited to Grundfos and the Grundfos logo, are registered trademarks owned by The Grundfos Group. © 2025 Grundfos Holding A/S, all rights reserved.

93499739 **09. 2025**
ECM: 1432359

GRUNDFOS Holding A/S
Poul Due Jensens Vej 7
DK-8850 Bjerringbro
Tel: +45 87 50 14 00
www.grundfos.com

GRUNDFOS