GENIECON PANEL

Installation and operating instructions

GENIECON PANEL
Installation and operating instructions
(all available languages)
http://net.grundfos.com/qr/i/92956760

GRUNDFOS

GENIECON PANEL

English (GB)

Installation and operating instructions 4

Original installation and operating instructions

Table of contents

1. General information 4
1.1 Hazard statements 4
1.2 Notes 4
1.3 Target group 4

2. Product introduction 5
2.1 Product description 5
2.2 Applications 5
2.3 Pumps 5
2.4 Control variants 5

3. Identification 5
3.1 Nameplate 5
3.2 Type key 7
3.3 Type key for license 8
3.4 Approvals 8

4. Optional equipment 9

5. Receiving the product 11
5.1 Transporting the product 11
5.2 Inspecting the product 11
5.3 Scope of delivery 11
5.4 Handling and lifting the product 11

6. Installation requirements 11
6.1 Location 11

7. Mechanical installation 11

8. Electrical installation 11

9. Electromagnetic compatibility (EMC) 12

10. Starting up the product 12

11. Security 13
11.1 Firewall 13
11.2 Tamper detection 13
11.3 Factory reset 13
11.4 Access control 13
11.5 Network interfaces and services 13

12. Overview of control variants 14

13. Connectivity 15
13.1 Communication interface modules and protocols 16

14. Servicing the product 16
14.1 Taking the product out of operation 16

15. Fault finding 16
15.1 The panel is stopped and cannot restart 16
15.2 Overall alarm codes 17

16. Technical data 47
16.1 Mechanical data 47
16.2 Electrical data 47

17. Related documents 47

18. Disposing of the product 48

19. Document quality feedback 48

1. General information

Read this document before you install the product. Installation and operation must comply with local regulations and accepted codes of good practice.

1.1 Hazard statements

The symbols and hazard statements below may appear in Grundfos installation and operating instructions, safety instructions and service instructions.

DANGER
Indicates a hazardous situation which, if not avoided, will result in death or serious personal injury.

WARNING
Indicates a hazardous situation which, if not avoided, could result in death or serious personal injury.

CAUTION
Indicates a hazardous situation which, if not avoided, could result in minor or moderate personal injury.

The hazard statements are structured in the following way:

SIGNAL WORD
Description of the hazard
Consequence of ignoring the warning
- Action to avoid the hazard.

1.2 Notes

The symbols and notes below may appear in Grundfos installation and operating instructions, safety instructions and service instructions.

Observe these instructions for explosion-proof products.

A blue or grey circle with a white graphical symbol indicates that an action must be taken.

A red or grey circle with a diagonal bar, possibly with a black graphical symbol, indicates that an action must not be taken or must be stopped.

If these instructions are not observed, it may result in malfunction or damage to the equipment.

Tips and advice that make the work easier.

1.3 Target group

These installation and operating instructions are intended for qualified installers and operators of the product.

We recommend that installation is carried out by skilled personnel with technical qualifications required by the specific legislation in force.

2. Product introduction

2.1 Product description

Grundfos GENIECON PANEL is mainly designed to control and monitor multiple pumps in, for example, pressure boosting systems, circulating systems and waste water systems.

GENIECON PANEL has a control panel with a built-in controller, GENIECON UNIT.

The control panel contains all necessary components, such as the main switch, contactors, IO modules and cables.

The external frequency converters can also be installed in the control panel if needed in some applications. The control panel is designed for both wall and floor mounting, depending on the variants.

2.2 Applications

GENIECON PANEL is mainly designed for applications including but not limited to the following:

- booster systems
- circulation systems for HVAC (heating, ventilation and air-conditioning)
- water distribution
- tank filling and level control.

2.3 Pumps

GENIECON PANEL is designed for systems with pumps including but not limited to the following ones:

- CR, CRE, CRI, CRIE, CRN, CRNE, CRIE
- NB, NBE, NBG, NBGE
- NK, NKE, NKG, NKGE
- TP
- TPE 3
- TPE Series 1000, TPE Series 2000
- HS
- SP
- MAGNA
- UPE Series 2000.

The main pumps of a system must be of the same type and size.

2.4 Control variants

GENIECON PANEL has five control variants.

Control variant	Description
-E	Two to six pumps with integrated frequency converters (0.37 - 26 kW)
-EC	Two to six pumps connected to Grundfos CUE frequency converters, one converter for each pump
-F	Two to six pumps connected to a Grundfos CUE frequency converter. The speed-controlled operation alternates between the pumps
-EF	Two to six pumps connected to VFDs from a third-party, one VFD for each pump
-E2	Two to six MAGNA, UPE, TPE 3 or TPE Series 2000 pumps

3. Identification

3.1 Nameplate

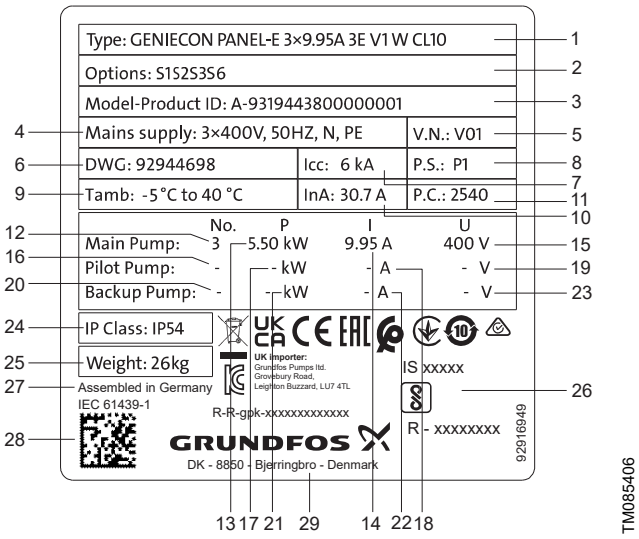

Nameplate for the standard version of GENIECON PANEL

Pos.	Description
1	Product name
2	Option
3	Model code - material number and serial number
4	Mains supply
5	Version number
6	Product number of control panel
7	Short-circuit current
8	Production site
9	Min./max. ambient temperature
10	Rated current
11	Production code (year and week)
12	Number of main pumps
13	Rated power of the main pump
14	Rated current of the main pump
15	Rated voltage of the main pump
16	Number of pilot pumps
17	Rated power of the pilot pump
18	Rated current of the pilot pump
19	Rated voltage of the pilot pump
20	Number of backup pumps
21	Rated power of the backup pump
22	Rated current of the backup pump
23	Rated voltage of the backup pump
24	Enclosure class
25	Weight
26	Marks of approval
27	Country of origin
28	2D data matrix code
29	Company address

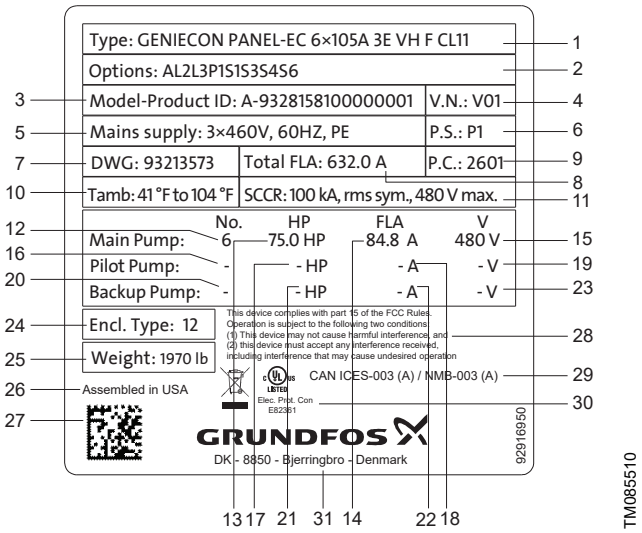

Nameplate for the US version of GENIECON PANEL

Pos.	Description
1	Product name
2	Option
3	Model code - material number and serial number
4	Version number
5	Mains supply
6	Production site
7	Product number of control panel
8	Rated current of control panel
9	Production code (year and week)
10	Min./max. ambient temperature
11	Short circuit current rating, maximum SCCR volts
12	Number of main pumps
13	Rated power of the main pump
14	Rated current of the main pump
15	Rated voltage of the main pump
16	Number of pilot pumps
17	Rated power of the pilot pump
18	Rated current of the pilot pump
19	Rated voltage of the pilot pump
20	Number of backup pumps
21	Rated power of the backup pump
22	Rated current of the backup pump
23	Rated voltage of the backup pump
24	Enclosure class
25	Weight
26	Country of origin
27	2D data matrix code
28	FCC compliance statement
29	Canadian label of EMC standard
30	Marks of approval
31	Company address

3.2 Type key

Example: GENIECON PANEL-EC 6×126A 3E V1 F CL11

Code	Description	Designation
GENIECON PANEL		Product name
-EC	E: integrated frequency converter, one for each pump EC: Grundfos CUE frequency converter, one for each pump F: fixed-speed pumps with one common Grundfos CUE frequency converter EF: VFD from a third party, one for each pump E2: MAGNA, UPE, TPE 3 or TPE Series 2000 pumps	System type
6×	1-6	Number of main pumps
126A	Main pump rated current Main pump VFD/CUE maximum rated current for US panel EC, F and EF systems	Rated current of the main pump
3	1, 3	Main pump phases
E	E: Electronic DOL: Direct-on-line SD: Star-delta	Start method of the main pump
V1	V1: 3 × 400 V, 50 Hz, N, PE V2: 3 × 400 V, 50 Hz, PE V3: 3 × 380 V, 50 Hz, N, PE V4: 3 × 380 V, 50 Hz, PE V5: 3 × 400 V, 60 Hz, N, PE V6: 3 × 400 V, 60 Hz, PE V7: 3 × 380 V, 60 Hz, N, PE V8: 3 × 380 V, 60 Hz, PE V9: 3 × 440 V, 60 Hz, N, PE VA: 3 × 440 V, 60 Hz, PE VB: 3 × 220 V, 60 Hz, N, PE VC: 3 × 220 V, 60 Hz, PE VD: 1 × 208 V, 60 Hz, PE VE: 3 × 208 V, 60 Hz, PE VF: 3 × 230 V, 60 Hz, PE VG: 3 × 460 V, 60 Hz, N, PE VH: 3 × 460 V, 60 Hz, PE VJ: 3 × 575 V, 60 Hz, PE VK: 3 × 415 V, 50 Hz, N, PE VL: 3 × 415 V, 50 Hz, PE VM: 1 × 240 V, 50 Hz, N, PE VN: 1 × 230 V, 50 Hz, N, PE VQ: 1 × 230 V, 60 Hz, PE VR: 3 × 200 V, 50 Hz, PE VS: 3 × 200 V, 60 Hz, PE VX: CSU variant (special voltage rating)	Voltage code
F	F: floor-standing W: wall-mounting X: customised	Design
C	C: MPC W: Waste water	License usage
L11	L10: Core license L20: Advanced license L11: Core and Connect license L21: Advanced and Connect license	License type

Grundfos provides three types of standard panels: European, Asian and US.

For a European standard control panel, the panel always includes:

- a main switch with a door interlock
- a main switch with neutral (N)
- a wiring diagram showing repair switches
- all IO to terminals
- a wiring diagram showing sensor connections.

For an Asian standard control panel, the panel always includes:

- a main switch with a door interlock
- all IO to terminals

- a wiring diagram showing sensor connections
- an emergency operation switch.

For a US standard control panel, the panel always includes:

- main switch (fused) with a door interlock
- all IO to terminals
- transient-voltage protection
- emergency operation switches
- pump operating lights
- system fault light
- audible alarm
- pump service disconnect switches.

3.3 Type key for license

Example: GENIECON LICENSE-C 10 ADVANCED ULTD

Code	Description	Designation
GENIECON LICENSE	GENIECON LICENSE	License name
-C	C: MPC W: waste water	License usage
10	1: 1 device 10: 10 devices	Number of unlocking GENIECON UNIT
ADVANCED	CORE: core license ADVANCED: advanced license CONNECT: connect license	License type
ULTD	ULTD: unlimited 90D: 90 days	Time limit of the license

3.4 Approvals

These installation and operating instructions apply to GENIECON PANEL with the following approvals:

- CE
- EAC
- UA
- UKCA
- Morocco Conformity Mark (Safety and EMC)
- China RoHS
- SEPRO
- RCM
- BIS
- KC
- UL (for US and Canada only).

The approvals are indicated on the nameplate.

4. Optional equipment

●: This optional equipment can be applied to this variant.
o: This optional equipment cannot be applied to this variant.

Optional equipment overview				Control variants				
Optional equipment	**Description**	**Location**	**Code in type key**	**-E**	**-EC**	**-E2**	**-F**	**-EF**
Audible alarm	The audible alarm sounds when there is a system alarm. The sound pressure levels are: • 80 dB(A) • 100 dB(A).	GENIECON UNIT	A	●	●	o	●	●
Backup pump	The backup pump has a higher flow than the main pump.	System	B1	●	●	o	●	●
Pilot pump	A pump with a smaller flow than the main pump allows the system to run more efficiently at low flow demand.	System	B2	●	●	o	●	●
CIM 050 GENIbus	GENIbus module	GENIECON UNIT	C1	●	●	●	●	●
CIM 150 PROFIBUS	PROFIBUS DP Module	GENIECON UNIT	C3	●	●	●	●	●
CIM 200 Modbus RTU	Modbus RTU Module	GENIECON UNIT	C4	●	●	●	●	●
CIM 280 GiC 3G 4G EU	3G/4G GRM Grundfos Remote Management for the European market.	GENIECON UNIT	C6	●	●	●	●	●
CIM 280 GiC 3G 4G US	3G/4G GRM Grundfos Remote Management for the North American market.	GENIECON UNIT	C7	●	●	●	●	●
CIM 290-MA LTE GiC	LTE GiC	GENIECON UNIT	C8	●	●	●	●	●
CIM 290-MA LPWAN GiC	LPWAN GiC	GENIECON UNIT	C9	●	●	●	●	●
CIM 300 BACnet MS/TP	BACnet MS/TP	GENIECON UNIT	C10	●	●	●	●	●
CIM 500 Ethernet	Ethernet	GENIECON UNIT	C11	●	●	●	●	●
CIM 550 Ethernet GiC	Ethernet GiC	GENIECON UNIT	C12	●	●	●	●	●
Dry-running protection, electrode relay	The electrode relay is mounted in a panel. Order the electrodes separately.	GENIECON PANEL	D1	●	●	o	●	●
Dry-running protection, vibration-limit switch	The vibration-limit switch is shown on the wiring diagram. The vibration-limit switch is not supplied as standard.	GENIECON PANEL	D2	●	●	o	●	●
Dry-running protection, digital input	Digital input is shown on the wiring diagram.	GENIECON PANEL	D4	●	●	o	●	●
Motor filter (LC)	The motor filter is mounted in the panel for CUE or EC systems. GENIECON PANEL uses Sinus filters as standard. Other types are available on request.	GENIECON PANEL	F	o	●	o	●	●
Cabinet heater 30 W	A thermal device for heating the panel to raise the temperature.	GENIECON PANEL	H	●	●	o	●	●
Fault light, pump	The fault light is on if a fault occurs in the pump. Order one fault light for each pump.	GENIECON PANEL	L1	●	●	o	●	●
Fault light, system	The fault light is on if a fault occurs in the system. Phase failure does not cause fault indication.	GENIECON PANEL	L2	●	●	o	●	●
Operating light, pump	The operating light is on when the relevant pumps are in operation. Order one operating light for each pump.	GENIECON PANEL	L3	●	●	o	●	●
Operating light, system	The operating light is on when the system is in operation.	GENIECON PANEL	L4	●	●	o	●	●
Panel illumination light	The panel illumination light is on when the door of the control panel is open. The panel illumination light is either powered from a separate external mains supply or from the panel mains supply.	GENIECON PANEL	L5	●	●	o	●	●
Mains socket	The mains socket can be connected to a separate mains supply or be supplied directly from the panel mains supply.	GENIECON PANEL	L6	●	●	o	●	●
Beacon light	The beacon light is on when there is a system alarm. Phase failure does not cause alarm indication.	GENIECON PANEL	L7	●	●	o	●	●
Ammeter	An ammeter indicates the current of one phase per pump. Order one ammeter for each pump.	GENIECON PANEL	M1	●	●	o	●	●

Optional equipment overview				Control variants				
Optional equipment	**Description**	**Location**	**Code in type key**	**-E**	**-EC**	**-E2**	**-F**	**-EF**
Voltmeter	A voltmeter indicates the mains voltages among the mains phases and between the neutral conductor N and the mains phases when a neutral is present.	GENIECON PANEL	M2	●	●	o	●	●
Ethernet	An Ethernet entry outside GENIECON UNIT for easy connection. The Ethernet connection allows for easy and unlimited access to the setting and monitoring of the system from a remote PC.	GENIECON PANEL	N	●	●	o	●	●
IO 241	The IO 241 module is an optional module for gaining extra input and output signals.	GENIECON PANEL	O1	●	●	o	●	●
IO 242	The IO 242 is designed to control one or two pumps.	GENIECON PANEL	O2	●	●	o	●	●
IO 243	IO 243 can be used with Grundfos GENIECON UNIT to control one to three pumps, monitor the running conditions of the pumps, and connect to sensors in the pit, tank and pump motors.	GENIECON PANEL	O3	o	o	o	●	●
Transient-voltage protection	The transient-voltage protection protects the system against high-energy transients. The ranges are: • 3 × 400 V, N, PE, 50/60 Hz • 3 × 400 V, PE, 50/60 Hz.	GENIECON PANEL	P1	●	●	o	●	●
Transient + lightning volt protection	The system can be protected against strokes of lightning. The lightning protection follows IEC 61024-1:1992-10, class B & C. Additional earthing facilities must be arranged by the customer at the installation site. The ranges are: • 3 × 400 V, N, PE, 50/60 Hz • 3 × 400 V, PE, 50/60 Hz.	GENIECON PANEL	P2	●	●	o	●	●
Potential-free contacts	Potential-free contacts are used to indicate that the pumps are running or that an alarm is present.	GENIECON PANEL	Q	●	●	●	●	●
Main switch with door interlock	The door of the control panel can be opened only if the main switch is in the off position.	GENIECON PANEL	S1	●	●	●	●	●
Main switch with neutral (N) conductor	The main switch for disconnecting the neutral conductor is only used in connection with single-phase motors. Select this option according to the local rules for the installation site. As standard, the main switch does not disconnect the neutral conductor.	GENIECON PANEL	S2	●	●	●	●	●
Wiring diagram, showing repair switches	External repair switches are shown on the wiring diagram. In the US, the repair switches, or called Pump Service Disconnect Switches, are located inside the control panel.	GENIECON PANEL	S3	●	●	o	●	●
Emergency operation switch	The emergency operation switch enables emergency operation if a fault occurs in GENIECON UNIT. The motor protection and the dry-running protection are not activated during emergency operations. Order one switch for each pump.	GENIECON PANEL	S4	●	●	o	●	●
Hand/Off/Auto switch	A switch to control the operation mode of pumps. The operation mode can be manual control or auto control.	GENIECON PANEL	S5	●	●	o	●	●
Wiring diagram showing sensor connection	The wiring diagram is the schematics for the GENIECON PANEL. It shows the sensor connections.	GENIECON PANEL	S6	●	●	●	●	●
Backup battery	The battery is connected to GENIECON UNIT as a backup in case the power supply is interrupted.	GENIECON PANEL	T	●	●	o	●	●
Phase failure monitoring	To protect the system against phase failure. A potential-free switch is available for external monitoring.	GENIECON PANEL	U	●	●	o	●	●
Third party VFD (non-Grundfos VFD)	An external VFD is used to control the motor speed.	GENIECON PANEL	V	o	o	o	●	o

5. Receiving the product

5.1 Transporting the product

Depending on the size, GENIECON PANEL is delivered in an open wooden box, or a wooden or cardboard box designed for transport by a forklift truck or a similar vehicle.

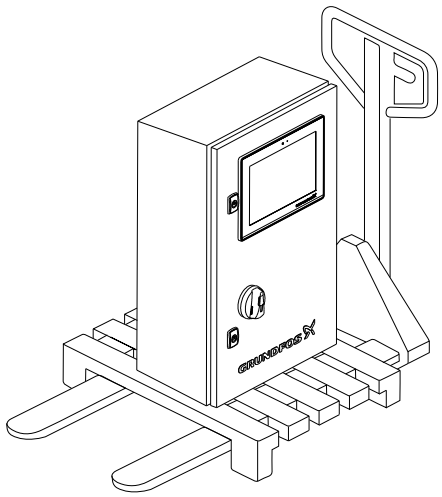

TM087633

5.2 Inspecting the product

Before installing the product, do the following:

1. Check if the product is as ordered.
2. Check if no visible parts are damaged.
3. If parts are damaged or missing, contact your local Grundfos sales company.

5.3 Scope of delivery

The package of GENIECON PANEL contains the following items:

- a GENIECON PANEL
- installation and operating instructions
- safety instructions
- a wiring diagram
- a quick guide.

5.4 Handling and lifting the product

You can handle GENIECON PANEL with lifting equipment or a forklift, depending on the size.

For the small panel without eyebolts, you can use a forklift to handle the panel.

For the panel with eyebolts, you can use lifting equipment to lift the panel.

The lifting point must always be above the centre of the gravity of the panel.

1. Use suitable lifting equipment that is in good condition and approved for the weight. The weight is stated on the packaging label of the control panel.
2. Do not use chains to lift the control panel because this can damage the control panel.

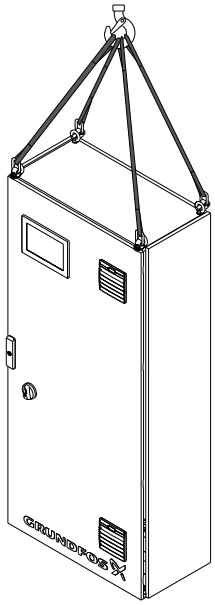

TM087632

6. Installation requirements

6.1 Location

You must install GENIECON PANEL in a well-ventilated room to ensure sufficient cooling of the control panel and its components.

GENIECON PANEL is not designed for outdoor installation and must not be exposed to direct sunlight.

The product must only be connected to protected network subnets with strict access control.

The product must be installed in a location with access control to prevent unauthorised access to the product.

7. Mechanical installation

Install the pumps according to the installation and operating instructions supplied with the pumps.

8. Electrical installation

The electrical installation must be carried out by an authorised person in accordance with local regulations and the relevant wiring diagram.

The power connection must be carried out according to the wiring diagram supplied with the product.

- The electrical installation of GENIECON PANEL must comply with enclosure class IP54 or the corresponding enclosure type rating in the US.
- Make sure that the supply voltage and frequency correspond to the values stated on the nameplate.
- Make sure that the conductor cross-section meets the specifications in the wiring diagram.

9. Electromagnetic compatibility (EMC)

To ensure proper operation, it is important to install the product in an EMC-correct way:

- Always use good engineering practices from authorized and qualified persons.
- Always refer to, build and produce according to the relevant wiring diagram.
- Avoid unscreened motor and signal cables in electrical control panels with frequency converters.
- Terminate the screen at both ends as close to the connecting terminals as possible. Avoid pigtails.
- Keep mains cables, motor cables and signal cables separated in the installation.

EMC installation of frequency converters

When installing Grundfos CUE and third-party frequency converters (VFD), refer to the similar sections about EMC installation in relevant installation and operating instructions.

Motor cables or wires

The motor cable must be screened for CUE or VFD to meet EMC requirements.

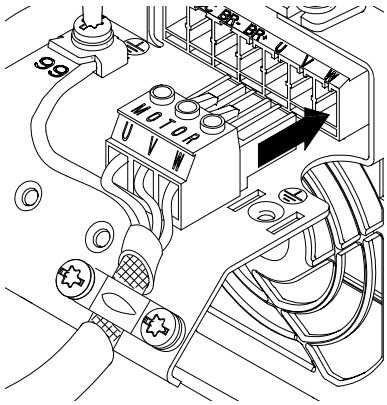

TM089277

Example of shielded motor cable connection with shield clamp

Emission classes

- For GENIECON PANEL with MGE/CUE/VFD of category C1, refers to control panels, that can be used in residential environments, which relate to locations connected to a low-voltage public network that supplies domestic dwellings.
- For GENIECON PANEL with MGE/CUE/VFD of category C3, refers to control panels intended for industrial locations or utilities characterized by a separate power network supplied from a high or medium voltage transformer dedicated to supply of the installation.

For C3, this equipment is not intended for use in residential locations and may not provide adequate protection for radio reception in such locations.

Immunity classes

GENIECON PANEL meets immunity requirements for industrial locations which are the most stringent, and can therefore be used everywhere.

Harmonics

The mains supply or generator at the installation site must be suitable for operating with frequency converters. Refer to frequency converter documentation for more details.

10. Starting up the product

After completing the mechanical and electrical installation described in the sections above, do the following:

1. Turn on the main switch.
2. Wait for the first display to appear. You will see a Grundfos logo showing up.
3. Configure the system. You can configure only the mandatory parts or make a detailed configuration.
4. After you finish the configuration, choose the operation mode and click **OK**.
5. The home screen will appear and the system will start to run in the operation mode you choose.

For detailed startup information, see the application and operating instructions of GENIECON PANEL. See the section on related documents.

Related information

17. Related documents

11. Security

11.1 Firewall

If GENIECON UNIT needs to be connected to the internet, we recommend that you install a firewall between the unsecure network and GENIECON UNIT.

11.2 Tamper detection

GENIECON UNIT is equipped with a tamper detection mechanism which detects if the back cover of GENIECON UNIT is removed.

If the back cover is removed, a security wire will be broken and cannot be repaired. In that case, GENIECON UNIT operates normally, but the tamper detection symbol is permanently displayed at the upper left corner of the home screen. This symbol warns you that an unauthorised person might have tampered with GENIECON UNIT.

There is a sticker on the side of GENIECON UNIT saying Do NOT open. If you remove or damage the sticker and back cover, the warranty of GENIECON UNIT will be voided.

TM087533

Related information

11.3 Factory reset

11.3 Factory reset

If you suspect that an unauthorised person has tampered with the GENIECON UNIT, you can perform the factory reset to restore GENIECON UNIT to the factory default secure state. However, performing the factory reset does not clear the tamper detection symbol if it is already displayed on the screen.

Performing a factory reset will erase all user data and settings that are added to the controller after commissioning of the system. After the factory reset is performed, you need to enter the factory default PIN code to access the product.

You can perform the factory reset in **Settings** > **OTHER SETTINGS** > **Reset** > **Factory reset**.

The factory default PIN code is the last 4 digits of the product ID on the nameplate of GENIECON UNIT.

11.4 Access control

We recommend that you set up and enable a four-digit PIN code for GENIECON UNIT.

When GENIECON UNIT is powered on, you need to log in with the factory default PIN code and set a new user-defined PIN code. After the new user-defined PIN code is set, the factory default PIN code cannot be used until the factory reset is performed.

When enabled, the user-defined PIN code must always be entered before you operate or change settings in GENIECON UNIT. When connecting to a GENIECON UNIT from Grundfos GO or GO LINK, the user-defined PIN code is required to authenticate the user's access to GENIECON UNIT.

Do the following to enable, disable and set a PIN code:

1. Go to **Settings** > **OTHER SETTINGS** > **PIN CODE**.
2. Enable or disable the toggle button to use or not use the PIN code.
3. Press **Reconfigure** to change your four-digit PIN code.

- The PIN code is enabled by default and you can disable it after commissioning if you do not wish to have it.
- There is no limit to the number of tries if you enter the wrong PIN code.
- You can change the user-defined PIN code at any time.
- You can disable the PIN code at any time, but we recommend that you always use the PIN code as a minimum security measure.
- Disabling the PIN code function will not delete the current PIN code. When you enable the PIN code function again, you need to enter the user-defined PIN code to reactivate it.

11.5 Network interfaces and services

The product exposes the following network interfaces in the factory default state:

Interface	Description
RJ45	Wired Ethernet Connectivity
Wi-Fi	Wireless Ethernet Connectivity

The product exposes the following services over network interfaces:

Interface	Exposes service	Description
RJ45	Modbus TCP	TCP/IP-based fieldbus
RJ45	BACnet	UDP/IP-based fieldbus

12. Overview of control variants

Systems with speed-controlled pumps		Systems with pumps connected to one CUE frequency converter
GENIECON PANEL-E **GENIECON PANEL-EC** **GENIECON PANEL-EF**	**GENIECON PANEL-E2**	**GENIECON PANEL-F**
-E: GENIECON PANEL with 2 to 6 E-pumps. -EC: GENIECON PANEL with 2 to 6 pumps, each pump connected to a Grundfos CUE frequency converter. -EF: GENIECON PANEL with 2 to 6 pumps connected to VFDs from a third party, one VFD for each pump. 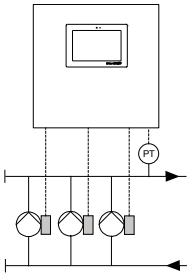 TM085635	-E2: GENIECON PANEL with 2 to 6 MAGNA, UPE, TPE 3 or TPE Series 2000 pumps. 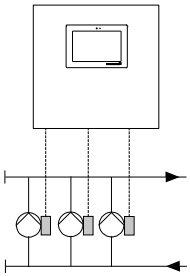 TM086923	-F: GENIECON PANEL with 2 to 6 pumps connected to one Grundfos CUE frequency converter. The speed-controlled operation alternates between the pumps. 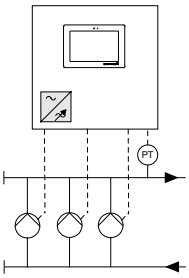 TM085634
One E-pump is in operation. 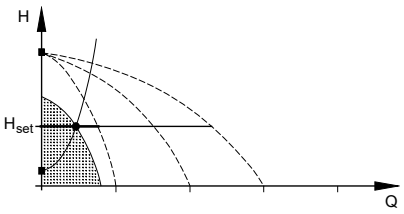 TM007995	One E-pump is in operation. 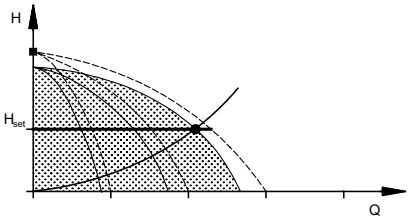 TM040212	One pump is connected to a Grundfos CUE frequency converter in operation. 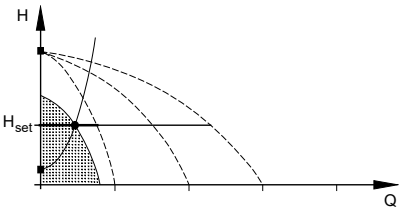 TM007995
Three E-pumps are in operation. 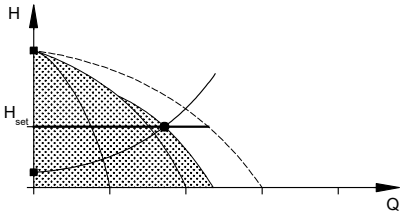 TM007998	Three E-pumps are in operation. 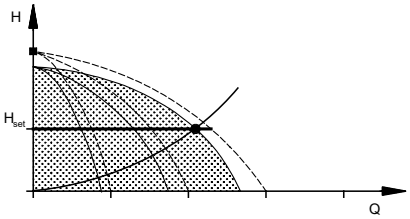 TM040212	One pump is connected to a Grundfos CUE frequency converter and two mains-operated pumps are in operation. 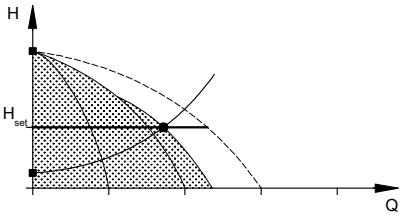 TM007998
GENIECON PANEL-E/EC/EF maintains constant pressure through continuous adjustment of the speed of the pumps. The system performance is adjusted to the demand by starting or stopping the required number of pumps and through parallel control of the pumps in operation. Pump changeover is automatic and depends on load, operating hours and faults. All pumps in operation run at the same speed. The number of pumps in operation also depends on the energy consumption of the pumps. When only one pump is needed, but two pumps running at a lower speed use less energy, two pumps will run at a lower speed. This requires that the differential pressure of the pump is measured and pump curve data are available for the controller.	GENIECON PANEL-Series 2000 maintains constant pressure through adjustment of the speed of the pumps. The performance is adjusted to the demand through cutting in/out the required number of pumps and through parallel control of the pumps in operation. Pump changeover is automatic and depends on load, operating hours and faults. All pumps in operation run at the same speed. The number of pumps in operation also depends on the energy consumption of the pumps. When only one pump is needed, but two pumps running at a lower speed use less energy, two pumps will run at a lower speed. This requires that the differential pressure of the pump is measured and pump curve data are available for the controller.	GENIECON PANEL-F maintains constant pressure through continuous adjustment of the speed of the pump connected to the Grundfos CUE frequency converter. The speed-controlled operation alternates between the pumps. The pump connected to the Grundfos CUE frequency converter always starts first. If the pressure cannot be maintained by the pump, one or two mains-operated pumps will be cut in. Pump changeover is automatic and depends on load, operating hours and faults.

13. Connectivity

GENIECON UNIT has hardware and software for communication. For example, it uses Grundfos CIM (Communication Interface Module). The CIM modules can connect GENIECON UNIT to any SCADA, PLC or Building Management System by using the applicable open protocols for wired (Ethernet, RS485) and wireless communication (Wi-Fi, Bluetooth and Cellular connectivity).

GENIbus is used to communicate between GENIECON UNIT, pumps, and I/O modules. GENIbus is a pump data communication protocol developed and maintained by Grundfos based on the GENIpro (Grundfos Electronics Network Intercommunications Protocol).

GENIECON UNIT supports 2 types of CIMs: software and hardware. See the picture below. CIM is a hardware module installed in GENIECON UNIT. Soft CIM is a built-in feature and needs a license to activate it.

CIM modules can transfer data such as operating mode, setpoint, control mode, warnings, alarms and power or energy consumption.

GENIECON UNIT is designed for wired or wireless communication with Grundfos GO Link (a PC tool). Grundfos GO Link provides an overview of system status and advanced product operation from a Windows PC or Laptop in non-wireless environments when installing, commissioning and maintaining Grundfos E-products in advanced applications. Grundfos GO is the most comprehensive mobile platform on the market. It allows you to set functions and give access to the Grundfos E-products.

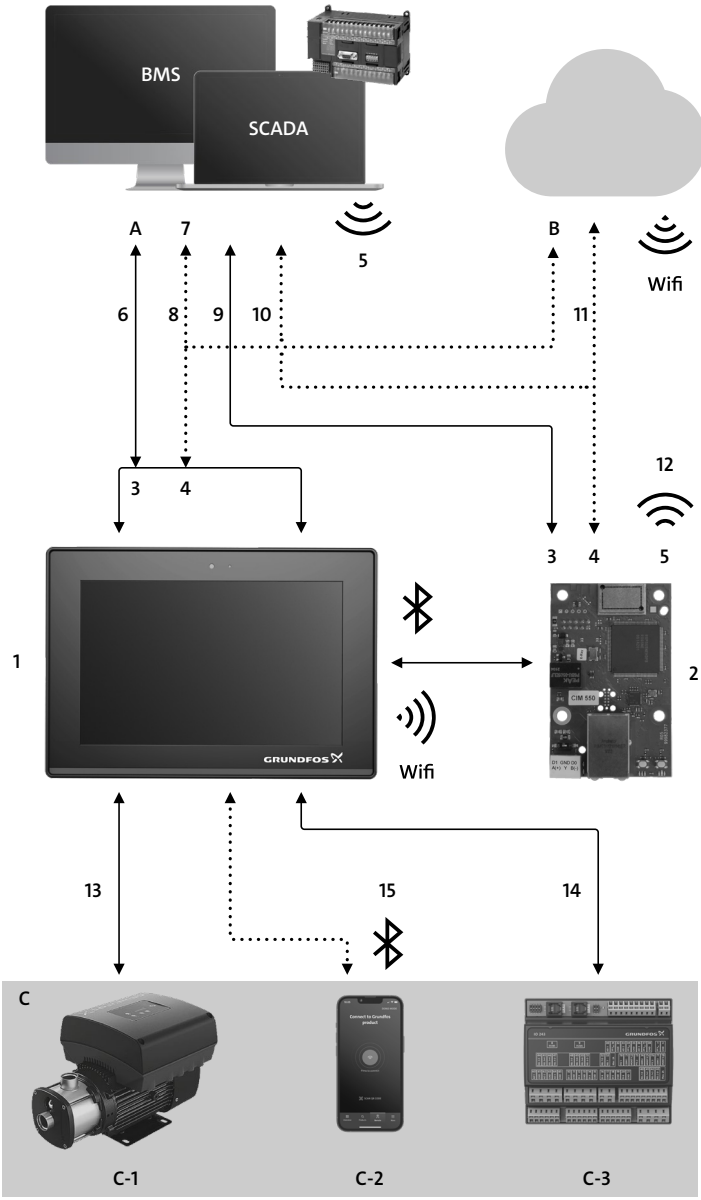

TM087949

Pos.	Description
A	BMS/SCADA/PLC/GO Link
B	Grundfos iSolution cloud (GiC)
C	Internal Grundfos devices
C-1	Grundfos pumps
C-2	Grundfos GO
C-3	I/O module
1	Soft CIM
2	CIM
3	Fieldbus

Pos.	Description
4	Ethernet
5	Cellular
6	Fieldbus - configurable RS485 port, Modbus RTU/ BACnet MS/TP/GENIbus
7	Ethernet - configurable Ethernet port, Modbus TCP/ BACnet IP
8	Ethernet - configurable Ethernet port, GDP
9	Fieldbus - RS 485 port, CIM 150/200/300
10	Ethernet - Ethernet port, CIM 500
11	Ethernet - Ethernet port, CIM 550
12	Cellular communication, CIM 290
13	GENIbus port for E-pumps
14	Connection port for extension modules
15	Bluetooth

CIM modules must be installed by authorised persons.

13.1 Communication interface modules and protocols

The following Communication Interface Modules can be used in GENIECON UNIT. CIM modules are optional equipment which can be ordered separately.

CIM	Protocol	Part number
CIM 050	GENIbus	96824631
CIM 150	PROFIBUS DP	96824793
CIM 200	Modbus RTU	96824796
CIM 290-MA	LPWAN GiC	92865300
CIM 300	BACnet MS/TP	96893770
CIM 500	PROFINET IO, Modbus TCP, Ethernet/IP, BACnet IP	98301408
CIM 550	Ethernet GiC	92546689

Due to different regulations in different countries, not all the CIM modules in the list can be used worldwide. For detailed information, contact Grundfos.

14. Servicing the product

14.1 Taking the product out of operation

WARNING
Electric shock
Death or serious personal injury
- Switch off the power supply before you start any work on the product.
- Lock the main switch to ensure that the power supply cannot be accidentally switched on.

1. Switch off the main switch to take the product out of operation.
2. Make sure that the product cannot be operated by unqualified persons.

15. Fault finding

WARNING
Electric shock
Death or serious personal injury
- Switch off the power supply for at least five minutes to allow any capacitors in the system to discharge fully before you start any work on the product.
- Make sure that the power supply cannot be accidentally switched on.

15.1 The panel is stopped and cannot restart

Cause	Remedy
The power supply is disconnected.	• Check the power supply and connect it to the panel.
The main switch is switched off or defective.	• Switch on the main switch or replace it with a new one.
The primary sensor is defective.	• Replace the sensor. • Transmitters with 0-20 mA or 4-20 mA output signals are monitored by the system.
The cable is broken or short-circuited.	• Replace or repair the cable.
GENIECON UNIT is not working.	• See the section on fault finding in the installation and operating instructions of GENIECON UNIT through the link or QR code below: QR92956748 *GPC link*

15.2 Overall alarm codes

This is a list of alarm and warning codes for GENIECON UNIT. For the detailed remedies for each alarm code, see the sections below.

Code	Alert source	Description
1	Grundfos E-pumps or CUEs	*Motor current leakage*
2	Grundfos E-pumps or CUEs	*Power phase missing*
3	Grundfos E-pumps or CUEs	*External alarm from DI*
3-1001	GENIECON system	*External fault signal from DI 1*
3-1002	GENIECON system	*External fault signal from DI 2*
3-1003	GENIECON system	*External fault signal from DI 3*
3-1004	GENIECON system	*External fault signal from DI 4*
3-1005	GENIECON system	*External fault signal from DI 5*
3-1006	GENIECON system	*External fault signal from DI 6*
4	Grundfos E-pumps or CUEs	*Too many motor restarts*
7	Grundfos E-pumps or CUEs	*Motor driver power shuts down too often*
10-1001	Grundfos E-pumps or CUEs	*Communication fault with pump*
10-1003	Grundfos E-pumps or CUEs	*Pump Front End has lost communication with its Back End*
14	Grundfos E-pumps or CUEs	*Motor driver DC link protection*
16	Grundfos E-pumps or CUEs	*Unknown motor fault*
16-1002	GENIECON system (S2000)	*Measurement missing*
25-1001	GENIECON system	*IO terminals in system got a wrong configuration*
25-1006	GENIECON system	*Redundant outlet pressure sensor setting wrong*
25-1007	GENIECON system	*Redundant inlet pressure sensor setting wrong*
25-1008	GENIECON system	*Redundant flow sensor setting wrong*
25-1017	GENIECON system	*Redundant outlet temperature sensor setting wrong*
25-1018	GENIECON system	*Redundant inlet temperature sensor setting wrong*
25-1019	GENIECON system	*Redundant differential temperature sensor setting wrong*
28	GENIECON system	*Battery low*
29	Grundfos E-pumps or CUEs	*Negative turbine operation*
30	Grundfos E-pumps or CUEs	*Bearing wear indication*
31	Grundfos E-pumps or CUEs	*Change varistors (specific service information)*
32	Grundfos E-pumps or CUEs	*Overvoltage*
40	Grundfos E-pumps or CUEs	*Undervoltage*
41	Grundfos E-pumps or CUEs	*Transient voltage too low*
42	Grundfos E-pumps or CUEs	*Motor cut-in fault*
45	Grundfos E-pumps or CUEs	*Motor voltage asymmetry*
48	GENIECON system (IO 243) or Grundfos E-pumps or CUEs	*Motor is overloaded*
49	Grundfos E-pumps or CUEs	*Motor is overcurrent*
50	Grundfos E-pumps or CUEs	*Motor protection function (MPF), general shutdown*
51	Grundfos E-pumps or CUEs	*Pump blocked*
54	Grundfos E-pumps or CUEs	*Motor protection function, 3 second limit*
55	Grundfos E-pumps or CUEs	*Motor current protection*
56	Grundfos E-pumps or CUEs	*Motor underload*
57	Grundfos E-pumps or CUEs	*Dry running*
57-1003	GENIECON system	*Dry running detection based on level measurement*
57-1004	GENIECON system	*Dry running detection based on pump inlet pressure measurement*
57-1005	GENIECON system	*Dry running detection based on dedicated digital dry running signal*
64-1001	Grundfos E-pumps or CUEs	*Overtemperature*
64-1002	Grundfos E-pumps or CUEs	*Overtemperature*
65	Grundfos E-pumps or CUEs	*Motor high temperature*
66	Grundfos E-pumps or CUEs	*High temperature of the controller*

Code	Alert source	Description
67	Grundfos E-pumps or CUEs	*High temperature*
68-1001	Grundfos E-pumps or CUEs	*High media temperature, mixing loop for radiator fault*
68-1002	Grundfos E-pumps or CUEs	*High media temperature, mixing loop for underfloor heating fault*
68-1003	Grundfos E-pumps or CUEs	*High media temperature, radiator heat exchanger fault*
68-1004	Grundfos E-pumps or CUEs	*High media temperature, underfloor heat exchanger fault*
69	Grundfos E-pumps or CUEs	*Winding temperature too high*
70	Grundfos E-pumps or CUEs	*Thermal relay 2 in motor, for example, thermistor*
72	Grundfos E-pumps or CUEs	*Internal fault*
73	Grundfos E-pumps or CUEs	*Hardware shutdown from the motor driver*
74	Grundfos E-pumps or CUEs	*Overvoltage*
75	GENIECON system	*Internal power supply voltage too low*
76	Grundfos E-pumps or CUEs	*Drive unit communication fault*
77	Grundfos E-pumps or CUEs	*Communication fault, twin-head pump*
80	Grundfos E-pumps or CUEs	*Hardware fault, type 2*
83	Grundfos E-pumps or CUEs	*Internal fault*
84	GENIECON system or Grundfos E-pumps or CUEs	*Memory access error*
85	Grundfos E-pumps or CUEs	*Drive unit memory fault*
87-1001	GENIECON system	*The first multi-sensor limit exceeded fault*
87-1002	GENIECON system	*The second multi-sensor limit exceeded fault*
87-1003	GENIECON system	*The third multi-sensor limit exceeded fault*
87-1004	GENIECON system	*The fourth multi-sensor limit exceeded fault*
87-1005	GENIECON system	*The fifth multi-sensor limit exceeded fault*
87-1006	GENIECON system	*The sixth multi-sensor limit exceeded fault*
87-1007	GENIECON system	*The seventh multi-sensor limit exceeded fault*
87-1008	GENIECON system	*The eighth multi-sensor limit exceeded fault*
87-1009	GENIECON system	*The ninth multi-sensor limit exceeded fault*
87-1010	GENIECON system	*The tenth multi-sensor limit exceeded fault*
88	Grundfos E-pumps or CUEs	*Integrated sensor fault*
89	GENIECON system or Grundfos E-pumps or CUEs	*Feedback sensor signal fault*
91-1001	Grundfos E-pumps or CUEs	*Signal fault, inlet temperature sensor*
91-1002	Grundfos E-pumps or CUEs	*Signal fault, outlet temperature sensor*
93	GENIECON system or Grundfos E-pumps or CUEs	*Fallback sensor signal fault*
96	Grundfos E-pumps or CUEs	*Setpoint signal out of range*
105	Grundfos E-pumps or CUEs	*Electronic rectifier protection (ERP) activated*
106	Grundfos E-pumps or CUEs	*Electronic inverter protection (EIP) activated*
132	GENIECON system	*Missing GSC file configuration*
133-1001	GENIECON system	*Limit 1 exceeded*
133-1002	GENIECON system	*Limit 2 exceeded*
133-1003	GENIECON system	*Limit 3 exceeded*
133-1004	GENIECON system	*Limit 4 exceeded*
133-1005	GENIECON system	*Limit 5 exceeded*
133-1006	GENIECON system	*Limit 6 exceeded*
133-1007	GENIECON system	*Limit 7 exceeded*
133-1008	GENIECON system	*Limit 8 exceeded*
134-1001	GENIECON system	*Data fault, fieldbus sensor 1*
134-1002	GENIECON system	*Data fault, fieldbus sensor 2*
134-1003	GENIECON system	*Data fault, fieldbus sensor 3*
134-1004	GENIECON system	*Data fault, fieldbus sensor 4*
134-1005	GENIECON system	*Data fault, fieldbus sensor 5*
134-1006	GENIECON system	*Data fault, fieldbus sensor 6*
142	GENIECON system	*Operating on backup battery*
143-1001	GENIECON system	*Multi-sensor 1 signal fault*

Code	Alert source	Description
143-1002	GENIECON system	*Multi-sensor 2 signal fault*
143-1003	GENIECON system	*Multi-sensor 3 signal fault*
143-1004	GENIECON system	*Multi-sensor 4 signal fault*
143-1005	GENIECON system	*Multi-sensor 5 signal fault*
143-1006	GENIECON system	*Multi-sensor 6 signal fault*
143-1007	GENIECON system	*Multi-sensor 7 signal fault*
143-1008	GENIECON system	*Multi-sensor 8 signal fault*
143-1009	GENIECON system	*Multi-sensor 9 signal fault*
143-1010	GENIECON system	*Multi-sensor 10 signal fault*
148	Grundfos E-pumps or CUEs	*Motor bearing high temperature (Pt100) in drive-end (DE)*
149	Grundfos E-pumps or CUEs	*Motor bearing high temperature (Pt100) in non-drive-end (NDE)*
155	Grundfos E-pumps or CUEs	*Inrush fault*
156	Grundfos E-pumps or CUEs	*Communication failure between frequency converters and main controller*
157	GENIECON system or Grundfos E-pumps or CUEs	*Real-Time Clock battery fault*
159	GENIECON system	*Communication error CIM*
161-1001	Grundfos E-pumps or CUEs	*Sensor supply fault, 5 V / 12 V (analog input AI 1)*
161-1002	Grundfos E-pumps or CUEs	*Sensor supply fault, 5 V / 12 V (analog input AI 2)*
161-1003	Grundfos E-pumps or CUEs	*Sensor supply fault, 5 V / 12 V (analog input AI 3)*
162-1001	Grundfos E-pumps or CUEs	*Overload in 24 V output 1*
162-1002	Grundfos E-pumps or CUEs	*Overload in 24 V output 2*
162-1003	Grundfos E-pumps or CUEs	*Overload in 24 V output 3*
163	Grundfos E-pumps or CUEs	*Drive unit configuration fault*
164	Grundfos E-pumps or CUEs	*LiqTec sensor signal fault*
165	Grundfos E-pumps or CUEs	*Signal fault*
165-1001	GENIECON system	*Signal fault, analog input AI 1*
165-1002	GENIECON system	*Signal fault, analog input AI 2*
165-1003	GENIECON system	*Signal fault, analog input AI 3*
165-1004	GENIECON system	*Signal fault, analog input AI 4*
165-1005	GENIECON system	*Signal fault, analog input AI 5*
165-1006	GENIECON system	*Signal fault, analog input AI 6*
165-1007	GENIECON system	*Signal fault, analog input AI 7*
165-1008	GENIECON system	*Signal fault, analog input AI 8*
165-1009	GENIECON system	*Signal fault, analog input AI 9*
165-1010	GENIECON system	*Signal fault, analog input AI 10*
166	Grundfos E-pumps or CUEs	*Analog input AI 2 signal fault*
167	Grundfos E-pumps or CUEs	*Analog input AI 3 signal fault*
175	Grundfos E-pumps or CUEs	*Supply temp. sensor fault*
176	Grundfos E-pumps or CUEs	*Return temp. sensor fault*
190	Grundfos E-pumps or CUEs	*Sensor limit 1 exceeded*
191	Grundfos E-pumps or CUEs	*High water level*
191-1001	GENIECON system	*Controlled output 1 exceeded the high limit*
191-1002	GENIECON system	*Controlled output 2 exceeded the high limit*
191-1003	GENIECON system	*Controlled output 3 exceeded the high limit*
191-1004	GENIECON system	*Controlled output 4 exceeded the high limit*
193-1001	GENIECON system	*Controlled output 1 exceeded the low limit*
193-1002	GENIECON system	*Controlled output 2 exceeded the low limit*
193-1003	GENIECON system	*Controlled output 3 exceeded the low limit*
193-1004	GENIECON system	*Controlled output 4 exceeded the low limit*
203	GENIECON system	*All pumps in alarm*
204-1001	GENIECON system	*Inconsistency between sensors, outlet pressure sensors*

Code	Alert source	Description
204-1002	GENIECON system	*Inconsistency between sensors, inlet pressure sensors*
204-1003	GENIECON system	*Inconsistency between sensors, flow sensors*
204-1004	GENIECON system	*Inconsistency between sensors, differential pressure sensors*
204-1005	GENIECON system	*Inconsistency between sensors, feedback sensor for user-defined control mode*
204-1006	GENIECON system	*Inconsistency between redundant outlet temperature sensors*
204-1007	GENIECON system	*Inconsistency between redundant inlet temperature sensors*
204-1008	GENIECON system	*Inconsistency between redundant differential temperature sensors*
205-1001	GENIECON system	*Digital inputs inconsistency 1*
205-1002	GENIECON system	*Digital input inconsistency 2*
205-1003	GENIECON system	*Digital input inconsistency 3*
205-1004	GENIECON system	*Digital input inconsistency 4*
209	Grundfos E-pumps or CUEs	*Non-return valve fault*
210	GENIECON system	*System over pressure*
211	GENIECON system	*Absolute system pressure low*
215	GENIECON system or Grundfos E-pumps or CUEs	*Pipe filling error*
225	GENIECON system	*Communication fault, pump module*
226-1001	GENIECON system	*Communication fault, I/O module 1*
226-1002	GENIECON system	*Communication fault, I/O module 2*
226-1003	GENIECON system	*Communication fault, I/O module 3*
226-1004	GENIECON system	*Communication fault, I/O module 4*
226-1005	GENIECON system	*Communication fault, I/O module 5*
226-1006	GENIECON system	*Communication fault, I/O module 6*
226-1007	GENIECON system	*Communication fault, I/O module 7*
226-1008	GENIECON system	*Communication fault, I/O module 8*
226-1009	GENIECON system	*Communication fault, I/O module 9*
226-1010	GENIECON system	*Communication fault, I/O module 10*
226-1011	GENIECON system	*Communication fault, I/O module 11*
226-1012	GENIECON system	*Communication fault, I/O module 12*
226-1013	GENIECON system	*Communication fault, I/O module 13*
226-1014	GENIECON system	*Communication fault, I/O module 14*
226-1015	GENIECON system	*Communication fault, I/O module 15*
226-1016	GENIECON system	*Communication fault, I/O module 16*
236-1001	Grundfos E-pumps or CUEs	*Pump 1 in alarm*
236-1002	Grundfos E-pumps or CUEs	*Pump 2 in alarm*
236-1003	Grundfos E-pumps or CUEs	*Pump 3 in alarm*
236-1004	Grundfos E-pumps or CUEs	*Pump 4 in alarm*
236-1005	Grundfos E-pumps or CUEs	*Pump 5 in alarm*
236-1006	Grundfos E-pumps or CUEs	*Pump 6 in alarm*
236-1021	Grundfos E-pumps or CUEs	*Pilot pump in alarm*
240	Grundfos E-pumps or CUEs	*Motor bearings need to be lubricated*
241	Grundfos E-pumps or CUEs	*Motor phase failure*
242	Grundfos E-pumps or CUEs	*Auto motor model recognition failed*
242-1001	GENIECON system	*Estimation aborted due to sudden change in load*
242-1002	GENIECON system	*Motor model verification failed*
242-1003	GENIECON system	*Estimation aborted by external causes*
242-1004	GENIECON system	*Estimation has failed due to motor cut-in failure*
242-1005	GENIECON system	*Estimation has failed due to timeout*
242-1006	GENIECON system	*Model recognition failure detected by motor driver*

15.2.1 Code 1 (Motor current leakage)

Cause	Remedy
The motor stator current leakage is detected by Grundfos E-pumps or CUEs.	• Check the remedies in installation and operation instructions supplied with Grundfos E-pumps and CUEs. See the section on related documents.

Related information

17. Related documents

15.2.2 Code 2 (Power phase missing)

Cause	Remedy
Power phase failure is detected by Grundfos E-pumps or CUEs.	• Check the remedies in installation and operation instructions supplied with Grundfos E-pumps and CUEs. See the section on related documents.

Related information

17. Related documents

15.2.3 Code 3 (External alarm from DI)

Cause	Remedy
The external fault signal is activated via digital input and is detected by Grundfos E-pumps (1-6) or CUEs (1-6).	• Check the remedies in installation and operation instructions supplied with Grundfos E-pumps and CUEs. See the section on related documents.

Related information

17. Related documents

15.2.4 Code 3-1001 (External fault signal from DI 1)

Cause	Remedy
The external fault signal is activated via DI 1.	• If it is set to manual reset, the fault can be reset with the alarm menu on the display when the digital input is no longer closed. • If you cannot reset it, check the wiring and input of the associated sensor or switch. • Check the output of the associated sensor or switch.

Related information

17. Related documents

15.2.5 Code 3-1002 (External fault signal from DI 2)

Cause	Remedy
The external fault signal is activated via DI 2.	• Check the wiring and input of the associated sensor or switch. • Check the output of the associated sensor or switch.

Related information

17. Related documents

15.2.6 Code 3-1003 (External fault signal from DI 3)

Cause	Remedy
The external fault signal is activated via DI 3.	• Check the wiring and input of the associated sensor or switch. • Check the output of the associated sensor or switch.

Related information

17. Related documents

15.2.7 Code 3-1004 (External fault signal from DI 4)

Cause	Remedy
The external fault signal is activated via DI 4.	• Check the wiring and input of the associated sensor or switch. • Check the output of the associated sensor or switch.

Related information

17. Related documents

15.2.8 Code 3-1005 (External fault signal from DI 5)

Cause	Remedy
The external fault signal is activated via DI 5.	• Check the wiring and input of the associated sensor or switch. • Check the output of the associated sensor or switch.

Related information

17. Related documents

15.2.9 Code 3-1006 (External fault signal from DI 6)

Cause	Remedy
The external fault signal is activated via DI 6.	• Check the wiring and input of the associated sensor or switch. • Check the output of the associated sensor or switch.

Related information

17. Related documents

15.2.10 Code 4 (Too many motor restarts)

Cause	Remedy
The motor has been restarted more times than the maximum number of restarts within a defined time interval and this fault is detected by Grundfos E-pumps or CUEs.	• Check the remedies in installation and operation instructions supplied with Grundfos E-pumps and CUEs. See the section on related documents.

Related information

17. Related documents

15.2.11 Code 7 (Motor driver power shuts down too often)

Cause	Remedy
The motor driver power shuts down too many times and is detected by Grundfos E-pumps or CUEs.	• Check the remedies in installation and operation instructions supplied with Grundfos E-pumps and CUEs. See the section on related documents.

Related information

17. Related documents

15.2.12 Code 10-1001 (Communication fault with pump)

Cause	Remedy
Communication between the connected pump and the controller is lost.	• See current alarms, and identify the faulty component from the alarm message. • Check the power supply. • Check the GENIbus cable connection. • Check that the GENIbus number is correct by using the Grundfos GO-Link.

Related information

17. Related documents

15.2.13 Code 10-1003 (Pump Front End has lost communication with its Back End)

Cause	Remedy
The pump Front End has lost communication with its Back End and the communication error is detected by Grundfos E-pumps or CUEs.	• Check the remedies in installation and operation instructions supplied with Grundfos E-pumps and CUEs. See the section on related documents.

Related information

17. Related documents

15.2.14 Code 14 (Motor driver DC link protection)

Cause	Remedy
The motor driver reports an alarm that the DC link voltage is out of range and and this fault is detected by Grundfos E-pumps or CUEs.	• Check the remedies in installation and operation instructions supplied with Grundfos E-pumps and CUEs. See the section on related documents.

Related information

17. Related documents

15.2.15 Code 16 (Unknown motor fault)

Cause	Remedy
An unknown motor fault is detected by Grundfos E-pumps or CUEs.	• Contact Grundfos.

Related information

17. Related documents

15.2.16 Code 16-1002 (Measurement missing)

Cause	Remedy
The pressure value or flow rate from the pump (S2000) is missing.	• Check the wiring and input of the associated sensor according to the wiring diagram. • Check the output of the associated sensor. • Check the settings of the associated sensor.

Related information

17. Related documents

15.2.17 Code 25-1001 (IO terminals in system got a wrong configuration)

Cause	Remedy
The configuration of the IO terminals in the system is wrong.	• Check the IO terminal configuration according to the installation and operating instructions.

Related information

17. Related documents

15.2.18 Code 25-1006 (Redundant outlet pressure sensor setting wrong)

Cause	Remedy
The configuration of the redundant outlet pressure sensor is wrong.	• Check the configuration of the redundant outlet pressure sensor according to the installation and operating instructions.

Related information

17. Related documents

15.2.19 Code 25-1007 (Redundant inlet pressure sensor setting wrong)

Cause	Remedy
The configuration of the redundant inlet pressure sensor is wrong.	• Check the configuration of the redundant inlet pressure sensor according to the installation and operating instructions.

Related information

17. Related documents

15.2.20 Code 25-1008 (Redundant flow sensor setting wrong)

Cause	Remedy
The configuration for the redundant flow sensor is wrong.	• Check the configuration of the redundant flow sensor according to the installation and operating instructions.

Related information

17. Related documents

15.2.21 Code 25-1017 (Redundant outlet temperature sensor setting wrong)

Cause	Remedy
The configuration of the redundant outlet temperature sensor is wrong.	• Check the configuration of the redundant outlet temperature sensor according to the installation and operating instructions.

Related information

17. Related documents

15.2.22 Code 25-1018 (Redundant inlet temperature sensor setting wrong)

Cause	Remedy
The configuration of the redundant inlet temperature sensor is wrong.	• Check the configuration of the redundant inlet temperature sensor according to the installation and operating instructions.

Related information

17. Related documents

15.2.23 Code 25-1019 (Redundant differential temperature sensor setting wrong)

Cause	Remedy
The configuration of the redundant differential temperature sensor is wrong.	• Check the configuration of the redundant differential temperature sensor according to the installation and operating instructions.

Related information

17. Related documents

15.2.24 Code 28 (Battery low)

Cause	Remedy
Battery protection is a feature to protect the battery against excessive discharge.	• Change the battery according to the installation and operating instructions.

Related information

17. Related documents

15.2.25 Code 29 (Negative turbine operation)

Cause	Remedy
The pump turbine running backwards was detected by Grundfos E-pumps or CUEs.	• Check the remedies in installation and operation instructions supplied with Grundfos E-pumps and CUEs. See the section on related documents.

Related information

17. Related documents

15.2.26 Code 30 (Bearing wear indication)

Cause	Remedy
The motor bearings need to be replaced and this is detected by Grundfos E-pumps or CUEs.	• Contact Grundfos.

Related information

17. Related documents

15.2.27 Code 31 (Change varistors (specific service information))

Cause	Remedy
The motor varistors need to be replaced and this is detected by Grundfos E-pumps or CUEs.	• Contact Grundfos.

Related information

17. Related documents

15.2.28 Code 32 (Overvoltage)

Cause	Remedy
Overvoltage of the motor driver is detected by Grundfos E-pumps or CUEs.	• Check the remedies in installation and operation instructions supplied with Grundfos E-pumps and CUEs. See the section on related documents.

Related information

17. Related documents

15.2.29 Code 40 (Undervoltage)

Cause	Remedy
The supply voltage of the pump is too low.	• Check the remedies in installation and operation instructions supplied with Grundfos E-pumps and CUEs. See the section on related documents. • Make sure that the power supply is within the specified range.

Related information

17. Related documents

15.2.30 Code 41 (Transient voltage too low)

Cause	Remedy
The motor driver transient is under voltage and this fault is detected by Grundfos E-pumps or CUEs.	• Check the remedies in installation and operation instructions supplied with Grundfos E-pumps and CUEs. See the section on related documents.

Related information

17. Related documents

15.2.31 Code 42 (Motor cut-in fault)

Cause	Remedy
Motor cut-in fault is detected by Grundfos E-pumps or CUEs.	• Check the remedies in installation and operation instructions supplied with Grundfos E-pumps and CUEs. See the section on related documents.

Related information

17. Related documents

15.2.32 Code 45 (Motor voltage asymmetry)

Cause	Remedy
Voltage asymmetry is detected from the mains supply.	• Check the remedies in installation and operation instructions supplied with Grundfos E-pumps and CUEs. See the section on related documents.

Related information

17. Related documents

15.2.33 Code 48 (Motor is overloaded)

Cause	Remedy
The motor protection relay is switched OFF due to high motor current.	• Check and possibly reduce the motor load.
Too high motor current is detected by Grundfos E-pumps or CUEs.	• Check the remedies in installation and operation instructions supplied with Grundfos E-pumps and CUEs. See the section on related documents.

Related information

17. Related documents

15.2.34 Code 49 (Motor is overcurrent)

Cause	Remedy
The motor overcurrent is detected by Grundfos E-pumps or CUEs.	• Check the remedies in installation and operation instructions supplied with Grundfos E-pumps and CUEs. See the section on related documents.

Related information

17. Related documents

15.2.35 Code 50 (Motor protection function (MPF), general shutdown)

Cause	Remedy
The motor protection function shuts down and this fault is detected by Grundfos E-pumps or CUEs.	• Check the remedies in installation and operation instructions supplied with Grundfos E-pumps and CUEs. See the section on related documents.

Related information

17. Related documents

15.2.36 Code 51 (Pump blocked)

Cause	Remedy
The pump is blocked and cannot start.	• Check the remedies in installation and operation instructions supplied with Grundfos E-pumps and CUEs. See the section on related documents. • Shut off the pump on the medium side, remove the pump head and remove deposits. These work must only be performed by a specialist company.

Related information

17. Related documents

15.2.37 Code 54 (Motor protection function, 3 second limit)

Cause	Remedy
The three-second limit of the motor protection function is detected by Grundfos E-pumps or CUEs.	• Check the remedies in installation and operation instructions supplied with Grundfos E-pumps and CUEs. See the section on related documents.

Related information

17. Related documents

15.2.38 Code 55 (Motor current protection)

Cause	Remedy
The motor current protection is detected by Grundfos E-pumps or CUEs.	• Check the remedies in installation and operation instructions supplied with Grundfos E-pumps and CUEs. See the section on related documents.

Related information

17. Related documents

15.2.39 Code 56 (Motor underload)

Cause	Remedy
Motor current is lower than the limit and this fault is detected by Grundfos E-pumps or CUEs.	• Check the remedies in installation and operation instructions supplied with Grundfos E-pumps and CUEs. See the section on related documents.

Related information

17. Related documents

15.2.40 Code 57 (Dry running)

Cause	Remedy
There is no water in the system or the system pressure is too low.	• Check the remedies in installation and operation instructions supplied with Grundfos E-pumps and CUEs. See the section on related documents. • Prime and vent the pump before a new startup.

Related information

17. Related documents

15.2.41 Code 57-1003 (Dry running detection based on level measurement)

Cause	Remedy
Dry running is detected because of the low water level indicated by the analog input level sensor.	• Check the wiring and input of the configured analog input. • Check the output of the associated sensor. • Supply water.

Related information

17. Related documents

15.2.42 Code 57-1004 (Dry running detection based on pump inlet pressure measurement)

Cause	Remedy
Dry running is detected because of the low inlet pressure indicated by the analog input pressure sensor.	• Check the wiring and input of the configured analog input. • Check the output of the associated sensor. • Supply water.

Related information

17. Related documents

15.2.43 Code 57-1005 (Dry running detection based on dedicated digital dry running signal)

Cause	Remedy
Dry running is detected because of the active signal on digital input terminals.	• Check the wiring and input of the configured digital input. • Check the output of the associated sensor. • Supply water.

Related information

17. Related documents

15.2.44 Code 64-1001 (Overtemperature)

Cause	Remedy
The media supply temperature is above the specification limit.	• Check the remedies in installation and operation instructions supplied with Grundfos E-pumps and CUEs. See the section on related documents.

Related information

17. Related documents

15.2.45 Code 64-1002 (Overtemperature)

Cause	Remedy
The critical overtemperature or fire protection is detected.	• Check the remedies in installation and operation instructions supplied with Grundfos E-pumps and CUEs. See the section on related documents.

Related information

17. Related documents

15.2.46 Code 65 (Motor high temperature)

Cause	Remedy
The temperature of the motor is too high and is detected by Grundfos E-pumps or CUEs.	• Check the remedies in installation and operation instructions supplied with Grundfos E-pumps and CUEs. See the section on related documents.

Related information

17. Related documents

15.2.47 Code 66 (High temperature of the controller)

Cause	Remedy
The high temperature at the motor driver controller side or the power converter side is detected by Grundfos E-pumps or CUEs.	• Check the remedies in installation and operation instructions supplied with Grundfos E-pumps and CUEs. See the section on related documents.

Related information

17. Related documents

15.2.48 Code 67 (High temperature)

Cause	Remedy
The high temperature at the converter side of the motor driver is detected by Grundfos E-pumps or CUEs.	• Check the remedies in installation and operation instructions supplied with Grundfos E-pumps and CUEs. See the section on related documents.

Related information

17. Related documents

15.2.49 Code 68-1001 (High media temperature, mixing loop for radiator fault)

Cause	Remedy
The mixing loop for the radiator is faulty.	• Check the remedies in installation and operation instructions supplied with Grundfos E-pumps and CUEs. See the section on related documents.

Related information

17. Related documents

15.2.50 Code 68-1002 (High media temperature, mixing loop for underfloor heating fault)

Cause	Remedy
The mixing loop for underfloor heating is faulty.	• Check the remedies in installation and operation instructions supplied with Grundfos E-pumps and CUEs. See the section on related documents.

Related information

17. Related documents

15.2.51 Code 68-1003 (High media temperature, radiator heat exchanger fault)

Cause	Remedy
The radiator heat exchanger is faulty.	• Check the remedies in installation and operation instructions supplied with Grundfos E-pumps and CUEs. See the section on related documents.

Related information

17. Related documents

15.2.52 Code 68-1004 (High media temperature, underfloor heat exchanger fault)

Cause	Remedy
The underfloor heat exchanger is faulty.	• Check the remedies in installation and operation instructions supplied with Grundfos E-pumps and CUEs. See the section on related documents.

Related information

17. Related documents

15.2.53 Code 69 (Winding temperature too high)

Cause	Remedy
The motor winding temperature is too high and detected by Grundfos E-pumps or CUEs. Thermal relay 1 is in the motor, for example, Clixon.	• Check the remedies in installation and operation instructions supplied with Grundfos E-pumps and CUEs. See the section on related documents.

Related information

17. Related documents

15.2.54 Code 70 (Thermal relay 2 in motor, for example, thermistor)

Cause	Remedy
The motor temperature is too high and detected by Grundfos E-pumps or CUEs. Thermal relay 2 is in the motor, for example, thermistor.	• Check the remedies in installation and operation instructions supplied with Grundfos E-pumps and CUEs. See the section on related documents.

Related information

17. Related documents

15.2.55 Code 72 (Internal fault)

Cause	Remedy
The internal fault is detected.	• Replace the pump and dispose in an environmentally sound way according to local regulations, or contact Grundfos Service.

Cause	Remedy
	• Check the remedies in installation and operation instructions supplied with Grundfos E-pumps and CUEs. See the section on related documents.

Related information

17. Related documents

15.2.56 Code 73 (Hardware shutdown from the motor driver)

Cause	Remedy
The HW shutdown alarm from the motor driver is detected by Grundfos E-pumps or CUEs.	• Check the remedies in installation and operation instructions supplied with Grundfos E-pumps and CUEs. See the section on related documents.

Related information

17. Related documents

15.2.57 Code 74 (Overvoltage)

Cause	Remedy
The supply voltage to the pump is too high and this fault is detected by Grundfos E-pumps or CUEs.	• Check the remedies in installation and operation instructions supplied with Grundfos E-pumps and CUEs. See the section on related documents. • Replace the pump and dispose in an environmentally sound way according to local regulations, or contact Grundfos Service.

Related information

17. Related documents

15.2.58 Code 75 (Internal power supply voltage too low)

Cause	Remedy
The internal 24 V power supply voltage is too low.	• Check the 24 V power supply and restore the voltage back to the prescribed level.

Related information

17. Related documents

15.2.59 Code 76 (Drive unit communication fault)

Cause	Remedy
The drive unit communication fault is detected by Grundfos E-pumps or CUEs.	• Check the remedies in installation and operation instructions supplied with Grundfos E-pumps and CUEs. See the section on related documents. • Replace the pump and dispose in an environmentally sound way according to local regulations, or contact Grundfos Service.

Related information

17. Related documents

15.2.60 Code 77 (Communication fault, twin-head pump)

Cause	Remedy
The communication fault of the twin-head pump is detected by Grundfos E-pumps or CUEs.	• Check the remedies in installation and operation instructions supplied with Grundfos E-pumps and CUEs. See the section on related documents.

Related information

17. Related documents

15.2.61 Code 80 (Hardware fault, type 2)

Cause	Remedy
The hardware fault type 2 alert of the motor driver is detected by Grundfos E-pumps or CUEs.	• Check the remedies in installation and operation instructions supplied with Grundfos E-pumps and CUEs. See the section on related documents.

Related information

17. Related documents

15.2.62 Code 83 (Internal fault)

Cause	Remedy
The FE memory fault of the motor driver is detected by Grundfos E-pumps or CUEs (EEPROM).	• Check the remedies in installation and operation instructions supplied with Grundfos E-pumps and CUEs. See the section on related documents.

Related information

17. Related documents

15.2.63 Code 84 (Memory access error)

Cause	Remedy
An error in one or more of the areas in the internal memory is detected.	• Replace GENIECON UNIT or contact Grundfos.
Persistence error is detected by Grundfos E-pumps or CUEs.	• Check the remedies in installation and operation instructions supplied with Grundfos E-pumps and CUEs. See the section on related documents.

Related information

17. Related documents

15.2.64 Code 85 (Drive unit memory fault)

Cause	Remedy
The drive unit memory fault is detected by Grundfos E-pumps or CUEs.	• Check the remedies in installation and operation instructions supplied with Grundfos E-pumps and CUEs. See the section on related documents. • Replace the pump and dispose in an environmentally sound way according to local regulations, or contact Grundfos Service.

Related information

17. Related documents

15.2.65 Code 87-1001 (The first multi-sensor limit exceeded fault)

Cause	Remedy
The first multi-sensor signal is continuously below the minimum limit.	• Make sure that the first multi-sensor value does not exceed the minimum limit, or adjust the first multi-sensor minimum limit.

Related information

17. Related documents

15.2.66 Code 87-1002 (The second multi-sensor limit exceeded fault)

Cause	Remedy
The second multi-sensor signal is continuously below the minimum limit.	• Make sure that the second multi-sensor value does not exceed the minimum limit, or adjust the second multi-sensor minimum limit.

Related information

17. Related documents

15.2.67 Code 87-1003 (The third multi-sensor limit exceeded fault)

Cause	Remedy
The third multi-sensor signal is continuously below the minimum limit.	• Make sure that the third multi-sensor value does not exceed the minimum limit, or adjust the third multi-sensor minimum limit.

Related information

17. Related documents

15.2.68 Code 87-1004 (The fourth multi-sensor limit exceeded fault)

Cause	Remedy
The fourth multi sensor signal is continuously below the minimum limit.	• Make sure that the fourth multi-sensor value does not exceed the minimum limit, or adjust the fourth multi sensor minimum limit.

Related information

17. Related documents

15.2.69 Code 87-1005 (The fifth multi-sensor limit exceeded fault)

Cause	Remedy
The fifth multi-sensor signal is continuously below the minimum limit.	• Make sure that the fifth multi-sensor value does not exceed the minimum limit, or adjust the fifth multi-sensor minimum limit.

Related information

17. Related documents

15.2.70 Code 87-1006 (The sixth multi-sensor limit exceeded fault)

Cause	Remedy
The sixth multi-sensor signal is continuously below the minimum limit.	• Make sure that the sixth multi-sensor value does not exceed the minimum limit, or adjust the sixth multi-sensor minimum limit.

Related information

17. Related documents

15.2.71 Code 87-1007 (The seventh multi-sensor limit exceeded fault)

Cause	Remedy
The seventh multi-sensor signal is continuously below the minimum limit.	• Make sure that the seventh multi-sensor value does not exceed the minimum limit, or adjust the seventh multi-sensor minimum limit.

Related information

17. Related documents

15.2.72 Code 87-1008 (The eighth multi-sensor limit exceeded fault)

Cause	Remedy
The eighth multi-sensor signal is continuously below the minimum limit.	• Make sure that the eighth multi-sensor value does not exceed the minimum limit, or adjust the eighth multi-sensor minimum limit.

Related information

17. Related documents

15.2.73 Code 87-1009 (The ninth multi-sensor limit exceeded fault)

Cause	Remedy
The ninth multi-sensor signal is continuously below the minimum limit.	• Make sure that the ninth multi-sensor value does not exceed the minimum limit, or adjust the ninth multi-sensor minimum limit.

Related information

17. Related documents

15.2.74 Code 87-1010 (The tenth multi-sensor limit exceeded fault)

Cause	Remedy
The tenth multi-sensor signal is continuously below the minimum limit.	• Make sure that the tenth multi-sensor value does not exceed the minimum limit, or adjust the tenth multi-sensor minimum limit.

Related information

17. Related documents

15.2.75 Code 88 (Integrated sensor fault)

Cause	Remedy
The signal fault of the integrated sensor is detected by Grundfos E-pumps or CUEs.	• Check the remedies in installation and operation instructions supplied with Grundfos E-pumps and CUEs. See the section on related documents.

Related information

17. Related documents

15.2.76 Code 89 (Feedback sensor signal fault)

Cause	Remedy
Feedback sensor signal fault is detected by Grundfos E-pumps or CUEs.	• Check the remedies in installation and operation instructions supplied with Grundfos E-pumps and CUEs. See the section on related documents.
The signal of the main feedback sensor is faulty.	• Check the wiring and input of the associated main feedback sensor according to the wiring diagram. • Check the output of the associated main feedback sensor. • Check the settings of the main feedback sensor.

Related information

17. Related documents

15.2.77 Code 91-1001 (Signal fault, inlet temperature sensor)

Cause	Remedy
The signal fault of the inlet temperature sensor is detected by Grundfos E-pumps or CUEs.	• Check the remedies in installation and operation instructions supplied with Grundfos E-pumps and CUEs. See the section on related documents.

Related information

17. Related documents

15.2.78 Code 91-1002 (Signal fault, outlet temperature sensor)

Cause	Remedy
The signal fault of the outlet temperature sensor is detected by Grundfos E-pumps or CUEs.	• Check the remedies in installation and operation instructions supplied with Grundfos E-pumps and CUEs. See the section on related documents.

Related information

17. Related documents

15.2.79 Code 93 (Fallback sensor signal fault)

Cause	Remedy
The signal fault of the fallback sensor is detected by Grundfos E-pumps or CUEs.	• Check the wiring and input of the associated fallback sensor according to the wiring diagram. • Check the output of the associated fallback sensor. • Check the settings of the fallback sensor.
The sensor signal fault of the fallback control mode is detected by the controller, but the system is running in the user selected control mode.	• Check the wiring and input of the associated fallback sensor according to the wiring diagram. • Check the output of the associated fallback sensor. • Check the settings of the fallback sensor.
The sensor signal fault of the fallback control mode is detected by the controller when the system is running in the fallback control mode.	• Check the wiring and input of the associated fallback sensor according to the wiring diagram. • Check the output of the associated fallback sensor. • Check the settings of the fallback sensor.

Related information

17. Related documents

15.2.80 Code 96 (Setpoint signal out of range)

Cause	Remedy
The setpoint signal is out of range and this fault is detected by Grundfos E-pumps or CUEs.	• Check the remedies in installation and operation instructions supplied with Grundfos E-pumps and CUEs. See the section on related documents.

Related information

17. Related documents

15.2.81 Code 105 (Electronic rectifier protection (ERP) activated)

Cause	Remedy
The electronic rectifier protection alert is detected by Grundfos E-pumps or CUEs.	• Check the remedies in installation and operation instructions supplied with Grundfos E-pumps and CUEs. See the section on related documents.

Related information

17. Related documents

15.2.82 Code 106 (Electronic inverter protection (EIP) activated)

Cause	Remedy
The electronic inverter protection alert is detected by Grundfos E-pumps or CUEs.	• Check the remedies in installation and operation instructions supplied with Grundfos E-pumps and CUEs. See the section on related documents.

Related information

17. Related documents

15.2.83 Code 132 (Missing GSC file configuration)

Cause	Remedy
The GSC file description is empty, or the GSC file is missing.	• Check the GSC file and contact Grundfos for further help.

Related information

17. Related documents

15.2.84 Code 133-1001 (Limit 1 exceeded)

Cause	Remedy
The configured parameter for limit 1 has exceeded its limit set by the user.	• Make sure that the configured parameter for limit 1 does not exceed the set limit, or adjust the limit 1 exceeded limit.

Related information

17. Related documents

15.2.85 Code 133-1002 (Limit 2 exceeded)

Cause	Remedy
The configured parameter for limit 2 has exceeded its limit set by the user.	• Make sure that the configured parameter for limit 2 does not exceed the set limit, or adjust the limit 2 exceeded limit.

Related information

17. Related documents

15.2.86 Code 133-1003 (Limit 3 exceeded)

Cause	Remedy
The configured parameter for limit 3 has exceeded its limit set by the user.	• Make sure that the configured parameter for limit 3 does not exceed the set limit, or adjust the limit 3 exceeded limit.

Related information

17. Related documents

15.2.87 Code 133-1004 (Limit 4 exceeded)

Cause	Remedy
The configured parameter for limit 4 has exceeded its limit set by the user.	• Make sure that the configured parameter for limit 4 does not exceed the set limit, or adjust the limit 4 exceeded limit.

Related information

17. Related documents

15.2.88 Code 133-1005 (Limit 5 exceeded)

Cause	Remedy
The configured parameter for limit 5 has exceeded its limit set by the user.	• Make sure that the configured parameter for limit 5 does not exceed the set limit, or adjust the limit 5 exceeded limit.

Related information

17. Related documents

15.2.89 Code 133-1006 (Limit 6 exceeded)

Cause	Remedy
The configured parameter for limit 6 has exceeded its limit set by the user.	• Make sure that the configured parameter for limit 6 does not exceed the set limit, or adjust the limit 6 exceeded limit.

Related information

17. Related documents

15.2.90 Code 133-1007 (Limit 7 exceeded)

Cause	Remedy
The configured parameter for limit 7 has exceeded its limit set by the user.	• Make sure that the configured parameter for limit 7 does not exceed the set limit, or adjust the limit 7 exceeded limit.

Related information

17. Related documents

15.2.91 Code 133-1008 (Limit 8 exceeded)

Cause	Remedy
The configured parameter for limit 8 has exceeded its limit set by the user.	• Make sure that the configured parameter for limit 8 does not exceed the set limit, or adjust the limit 8 exceeded limit.

Related information

17. Related documents

15.2.92 Code 134-1001 (Data fault, fieldbus sensor 1)

Cause	Remedy
The data from the fieldbus sensor 1 is invalid.	• Check the wiring and input of associated fieldbus sensor 1 according to the wiring diagram. • Check the output of the associated fieldbus sensor 1.

Related information

17. Related documents

15.2.93 Code 134-1002 (Data fault, fieldbus sensor 2)

Cause	Remedy
The data from fieldbus sensor 2 is invalid.	• Check the wiring and input of associated fieldbus sensor 2 according to the wiring diagram. • Check the output of the associated fieldbus sensor 2.

Related information

17. Related documents

15.2.94 Code 134-1003 (Data fault, fieldbus sensor 3)

Cause	Remedy
The data from fieldbus sensor 3 is invalid.	• Check the wiring and input of associated fieldbus sensor 3 according to the wiring diagram. • Check the output of the associated fieldbus sensor 3.

Related information

17. Related documents

15.2.95 Code 134-1004 (Data fault, fieldbus sensor 4)

Cause	Remedy
The data from fieldbus sensor 4 is invalid.	• Check the wiring and input of associated fieldbus sensor 4 according to the wiring diagram. • Check the output of the associated fieldbus sensor 4.

Related information

17. Related documents

15.2.96 Code 134-1005 (Data fault, fieldbus sensor 5)

Cause	Remedy
The data from fieldbus sensor 5 is invalid.	• Check the wiring and input of associated fieldbus sensor 5 according to the wiring diagram. • Check the output of the associated fieldbus sensor 5.

Related information

17. Related documents

15.2.97 Code 134-1006 (Data fault, fieldbus sensor 6)

Cause	Remedy
The data from fieldbus sensor 6 is invalid.	• Check the wiring and input of associated fieldbus sensor 6 according to the wiring diagram. • Check the output of the associated fieldbus sensor 6.

Related information

17. Related documents

15.2.98 Code 142 (Operating on backup battery)

Cause	Remedy
The digital input is configured for running on the backup battery.	• Check the 24VDC power supply for the controller.

Related information

17. Related documents

15.2.99 Code 143-1001 (Multi-sensor 1 signal fault)

Cause	Remedy
The first multi-sensor signal is faulty.	• Check the wiring and input of the associated first multi-sensor according to the wiring diagram. • Check the associated first multi-sensor output.

Related information

17. Related documents

15.2.100 Code 143-1002 (Multi-sensor 2 signal fault)

Cause	Remedy
The second multi-sensor signal is faulty.	• Check the wiring and input of the associated second multi-sensor according to the wiring diagram. • Check the associated second multi-sensor output.

Related information

17. Related documents

15.2.101 Code 143-1003 (Multi-sensor 3 signal fault)

Cause	Remedy
The third multi-sensor signal is faulty.	• Check the wiring and input of the associated third multi-sensor according to the wiring diagram. • Check the associated third multi-sensor output.

Related information

17. Related documents

15.2.102 Code 143-1004 (Multi-sensor 4 signal fault)

Cause	Remedy
The fourth multi-sensor signal is faulty.	• Check the wiring and input of the associated fourth multi-sensor according to the wiring diagram. • Check the associated fourth multi-sensor output.

Related information

17. Related documents

15.2.103 Code 143-1005 (Multi-sensor 5 signal fault)

Cause	Remedy
The fifth multi-sensor signal is faulty.	• Check the wiring and input of the associated fifth multi-sensor according to the wiring diagram. • Check the associated fifth multi-sensor output.

Related information

17. Related documents

15.2.104 Code 143-1006 (Multi-sensor 6 signal fault)

Cause	Remedy
The sixth multi-sensor signal is faulty.	• Check the wiring and input of the associated sixth multi-sensor according to the wiring diagram. • Check the associated sixth multi-sensor output.

Related information

17. Related documents

15.2.105 Code 143-1007 (Multi-sensor 7 signal fault)

Cause	Remedy
The seventh multi-sensor signal is faulty.	• Check the wiring and input of the associated seventh multi-sensor according to the wiring diagram. • Check the associated seventh multi-sensor output.

Related information

17. Related documents

15.2.106 Code 143-1008 (Multi-sensor 8 signal fault)

Cause	Remedy
The eighth multi-sensor signal is faulty.	• Check the wiring and input of the associated eighth multi-sensor according to the wiring diagram. • Check the associated eighth multi-sensor output.

Related information

17. Related documents

15.2.107 Code 143-1009 (Multi-sensor 9 signal fault)

Cause	Remedy
The ninth multi-sensor signal is faulty.	• Check the wiring and input of the associated ninth multi-sensor according to the wiring diagram. • Check the associated ninth multi-sensor output.

Related information

17. Related documents

15.2.108 Code 143 (Multi-sensor 10 signal fault)

Cause	Remedy
The tenth multi-sensor signal is faulty.	• Check the wiring and input of the associated tenth multi-sensor according to the wiring diagram. • Check the associated tenth multi-sensor output.

Related information

17. Related documents

15.2.109 Code 148 (Motor bearing high temperature (Pt100) in drive-end (DE))

Cause	Remedy
The drive-end high temperature (Pt100) alarm of the motor bearing is detected by Grundfos E-pumps or CUEs.	• Check the remedies in installation and operation instructions supplied with Grundfos E-pumps and CUEs. See the section on related documents.

Related information

17. Related documents

15.2.110 Code 149 (Motor bearing high temperature (Pt100) in non-drive-end (NDE))

Cause	Remedy
The non-drive-end high temperature (Pt100) alarm of the motor bearing is detected by Grundfos E-pumps or CUEs.	• Check the remedies in installation and operation instructions supplied with Grundfos E-pumps and CUEs. See the section on related documents.

Related information

17. Related documents

15.2.111 Code 155 (Inrush fault)

Cause	Remedy
The inrush fault is detected by Grundfos E-pumps or CUEs.	• Check the remedies in installation and operation instructions supplied with Grundfos E-pumps and CUEs. See the section on related documents.

Related information

17. Related documents

15.2.112 Code 156 (Communication failure between frequency converters and main controller)

Cause	Remedy
Communication to the frequency converter is lost and this fault is detected by Grundfos E-pumps or CUEs.	• Check the remedies in installation and operation instructions supplied with Grundfos E-pumps and CUEs. See the section on related documents.

Related information

17. Related documents

15.2.113 Code 157 (Real-Time Clock battery fault)

Cause	Remedy
Battery power for the real-time clock is missing. The real-time clock in GENIECON UNIT is out of order.	• Replace GENIECON UNIT or contact Grundfos.
The fault of the real-time clock is detected by Grundfos E-pumps or CUEs.	• Check the remedies in installation and operation instructions supplied with Grundfos E-pumps and CUEs. See the section on related documents.

Related information

17. Related documents

15.2.114 Code 159 (Communication error CIM)

Cause	Remedy
The CIM module is unable to communicate with the product. CIM is a communication interface module and it enables data communication via open and interoperable networks such as Modbus, BACnet and so on.	• Check the wirings and communication between CIM and the controller. • Check the CIM communication configuration.

Related information

17. Related documents

15.2.115 Code 161-1001 (Sensor supply fault, 5 V / 12 V (analog input AI 1))

Cause	Remedy
The 5 V or 12 V output overload protection is reported from Grundfos E-pumps or CUEs.	• Check the remedies in installation and operation instructions supplied with Grundfos E-pumps and CUEs. See the section on related documents.

Related information

17. Related documents

15.2.116 Code 161-1002 (Sensor supply fault, 5 V / 12 V (analog input AI 2))

Cause	Remedy
The 5 V or 12 V output overload protection is reported from Grundfos E-pumps or CUEs.	• Check the remedies in installation and operation instructions supplied with Grundfos E-pumps and CUEs. See the section on related documents.

Related information

17. Related documents

15.2.117 Code 161-1003 (Sensor supply fault, 5 V / 12 V (analog input AI 3))

Cause	Remedy
The 5 V or 12 V output overload protection is reported from Grundfos E-pumps or CUEs.	• Check the remedies in installation and operation instructions supplied with Grundfos E-pumps and CUEs. See the section on related documents.

Related information

17. Related documents

15.2.118 Code 162-1001 (Overload in 24 V output 1)

Cause	Remedy
The 24 V output 1 in the product is either short-circuited or consuming more than 50 mA.	• Check the remedies in installation and operation instructions supplied with Grundfos E-pumps and CUEs. See the section on related documents.

Related information

17. Related documents

15.2.119 Code 162-1002 (Overload in 24 V output 2)

Cause	Remedy
The 24 V output 2 in the product is either short-circuited or consuming more than 50 mA.	• Check the remedies in installation and operation instructions supplied with Grundfos E-pumps and CUEs. See the section on related documents.

Related information

17. Related documents

15.2.120 Code 162-1003 (Overload in 24 V output 3)

Cause	Remedy
The 24 V output 3 in the product is either short-circuited or consuming more than 50 mA.	• Check the remedies in installation and operation instructions supplied with Grundfos E-pumps and CUEs. See the section on related documents.

Related information

17. Related documents

15.2.121 Code 163 (Drive unit configuration fault)

Cause	Remedy
The configuration fault of the drive unit is detected by Grundfos E-pumps or CUEs.	• Check the remedies in installation and operation instructions supplied with Grundfos E-pumps and CUEs. See the section on related documents.

Related information

17. Related documents

15.2.122 Code 164 (LiqTec sensor signal fault)

Cause	Remedy
The signal fault of LiqTec sensor is detected by Grundfos E-pumps or CUEs.	• Check the remedies in installation and operation instructions supplied with Grundfos E-pumps and CUEs. See the section on related documents.

Related information

17. Related documents

15.2.123 Code 165 (Signal fault)

Cause	Remedy
The signal failure is detected by Grundfos E-pumps or CUEs.	• Check the remedies in installation and operation instructions supplied with Grundfos E-pumps and CUEs. See the section on related documents.
The signal failure on the analog input port is detected.	• Check the remedies in installation and operation instructions supplied with Grundfos E-pumps and CUEs. See the section on related documents.

Related information

17. Related documents

15.2.124 Code 165-1001 (Signal fault, analog input AI 1)

Cause	Remedy
The signal failure from the analog input 1 is detected.	• Check the wiring and input of analog input AI 1 according to the wiring diagram. • Check the sensor output associated with analog input AI 1. • Check the configuration of analog input AI 1.

Related information

17. Related documents

15.2.125 Code 165-1002 (Signal fault, analog input AI 2)

Cause	Remedy
The signal failure from the analog input 2 is detected.	• Check the wiring and input of analog input AI 2 according to the wiring diagram.

Cause	Remedy
	• Check the sensor output associated with analog input AI 2. • Check the configuration of analog input AI 2.

Related information

17. Related documents

15.2.126 Code 165-1003 (Signal fault, analog input AI 3)

Cause	Remedy
The signal failure from the analog input 3 is detected.	• Check the wiring and input of analog input AI 3 according to the wiring diagram. • Check the sensor output associated with analog input AI 3. • Check the configuration of analog input AI 3.

Related information

17. Related documents

15.2.127 Code 165-1004 (Signal fault, analog input AI 4)

Cause	Remedy
The signal failure from the analog input 4 is detected.	• Check the wiring and input of analog input AI 4 according to the wiring diagram. • Check the sensor output associated with analog input AI 4. • Check the configuration of analog input AI 4.

Related information

17. Related documents

15.2.128 Code 165-1005 (Signal fault, analog input AI 5)

Cause	Remedy
The signal failure from the analog input 5 is detected.	• Check the wiring and input of analog input AI 5 according to the wiring diagram. • Check the sensor output associated with analog input AI 5. • Check the configuration of analog input AI 5.

Related information

17. Related documents

15.2.129 Code 165-1006 (Signal fault, analog input AI 6)

Cause	Remedy
The signal failure from the analog input 6 is detected.	• Check the wiring and input of analog input AI 6 according to the wiring diagram. • Check the sensor output associated with analog input AI 6. • Check the configuration of analog input AI 6.

Related information

17. Related documents

15.2.130 Code 165-1007 (Signal fault, analog input AI 7)

Cause	Remedy
The signal failure from the analog input 7 is detected.	• Check the wiring and input of analog input AI 7 according to the wiring diagram. • Check the sensor output associated with analog input AI 7. • Check the configuration of analog input AI 7.

Related information

17. Related documents

15.2.131 Code 165-1008 (Signal fault, analog input AI 8)

Cause	Remedy
The signal failure from the analog input 8 is detected.	• Check the wiring and input of analog input AI 8 according to the wiring diagram. • Check the sensor output associated with analog input AI 8. • Check the configuration of analog input AI 8.

Related information

17. Related documents

15.2.132 Code 165-1009 (Signal fault, analog input AI 9)

Cause	Remedy
The signal failure from the analog input 9 is detected.	• Check the wiring and input of analog input AI 9 according to the wiring diagram. • Check the sensor output associated with analog input AI 9. • Check the configuration of analog input AI 9.

Related information

17. Related documents

15.2.133 Code 165-1010 (Signal fault, analog input AI 10)

Cause	Remedy
The signal failure from the analog input 10 is detected.	• Check the wiring and input of analog input AI 10 according to the wiring diagram. • Check the sensor output associated with analog input AI 10. • Check the configuration of analog input AI 10.

Related information

17. Related documents

15.2.134 Code 166 (Analog input AI 2 signal fault)

Cause	Remedy
The terminal AI 2 signal fault is detected by Grundfos E-pumps or CUEs.	• Check the remedies in installation and operation instructions supplied with Grundfos E-pumps and CUEs. See the section on related documents.

Related information

17. Related documents

15.2.135 Code 167 (Analog input AI 3 signal fault)

Cause	Remedy
The terminal AI 3 signal fault is detected by Grundfos E-pumps or CUEs.	• Check the remedies in installation and operation instructions supplied with Grundfos E-pumps and CUEs. See the section on related documents.

Related information

17. Related documents

15.2.136 Code 175 (Supply temp. sensor fault)

Cause	Remedy
The terminal 2 signal fault of the temperature sensor is detected by Grundfos E-pumps or CUEs.	• Check the remedies in installation and operation instructions supplied with Grundfos E-pumps and CUEs. See the section on related documents.

Related information

17. Related documents

15.2.137 Code 176 (Return temp. sensor fault)

Cause	Remedy
The terminal 3 signal fault of the temperature sensor is detected by Grundfos E-pumps or CUEs.	• Check the remedies in installation and operation instructions supplied with Grundfos E-pumps and CUEs. See the section on related documents.

Related information

17. Related documents

15.2.138 Code 190 (Sensor limit 1 exceeded)

Cause	Remedy
The sensor limit 1 is exceeded and this fault is detected by Grundfos E-pumps or CUEs.	• Check the remedies in installation and operation instructions supplied with Grundfos E-pumps and CUEs. See the section on related documents.

Related information

17. Related documents

15.2.139 Code 191 (High water level)

Cause	Remedy
The sensor limit 2 is exceeded and this fault is detected by Grundfos E-pumps or CUEs.	• Check the remedies in installation and operation instructions supplied with Grundfos E-pumps and CUEs. See the section on related documents.

Related information

17. Related documents

15.2.140 Code 191-1001 (Controlled output 1 exceeded the high limit)

Cause	Remedy
The controlled output 1 exceeds the high limit.	• Make sure that the configured parameter via controlled output does not exceed the high limit or adjust the limit.

Related information

17. Related documents

15.2.141 Code 191-1002 (Controlled output 2 exceeded the high limit)

Cause	Remedy
The controlled output 2 exceeds the high limit.	• Make sure that the configured parameter via controlled output does not exceed the set high limit or adjust the limit.

Related information

17. Related documents

15.2.142 Code 191-1003 (Controlled output 3 exceeded the high limit)

Cause	Remedy
The controlled output 3 exceeds the high limit.	• Make sure that the configured parameter via controlled output does not exceed the high limit or adjust the limit.

Related information

17. Related documents

15.2.143 Code 191-1004 (Controlled output 4 exceeded the high limit)

Cause	Remedy
The controlled output 4 exceeds the high limit.	• Make sure that the configured parameter via controlled output does not exceed the high limit or adjust the limit.

Related information

17. Related documents

15.2.144 Code 193-1001 (Controlled output 1 exceeded the low limit)

Cause	Remedy
The controlled output 1 exceeds the low limit.	• Make sure that the configured parameter via controlled output does not exceed the low limit or adjust the limit.

Related information

17. Related documents

15.2.145 Code 193-1002 (Controlled output 2 exceeded the low limit)

Cause	Remedy
The controlled output 2 exceeds the low limit.	• Make sure that the configured parameter via controlled output does not exceed the low limit or adjust the limit.

Related information

17. Related documents

15.2.146 Code 193-1003 (Controlled output 3 exceeded the low limit)

Cause	Remedy
The controlled output 3 exceeds the low limit.	• Make sure that the configured parameter via controlled output does not exceed the low limit or adjust the limit.

Related information

17. Related documents

15.2.147 Code 193-1004 (Controlled output 4 exceeded the low limit)

Cause	Remedy
The controlled output 4 exceeds the low limit.	• Make sure that the configured parameter via controlled output does not exceed the set low limit or adjust the limit.

Related information

17. Related documents

15.2.148 Code 203 (All pumps in alarm)

Cause	Remedy
It is indicated that every pump in the system has one or more alarms.	• Make sure that pumps are installed. • Check the GENIbus wires, for instance, connection and polarity.

Cause	Remedy
	• Check the remedies in installation and operation instructions supplied with Grundfos E-pumps and CUEs. See the section on related documents.

Related information

17. Related documents

15.2.149 Code 204-1001 (Inconsistency between sensors, outlet pressure sensors)

Cause	Remedy
Value inconsistency is detected between two sensors which are used for system outlet pressure or the primary feedback pressure sensor value is inconsistent with the redundant feedback sensor value.	• Check the wiring and input of the associated sensors according to the wiring diagram. • Check the output of the associated sensors.

Related information

17. Related documents

15.2.150 Code 204-1002 (Inconsistency between sensors, inlet pressure sensors)

Cause	Remedy
Value inconsistency is detected between two sensors which are used for system inlet pressure or the primary feedback pressure sensor value is inconsistent with the redundant feedback sensor value.	• Check the wiring and input of the associated sensors according to the wiring diagram. • Check the output of the associated sensors.

Related information

17. Related documents

15.2.151 Code 204-1003 (Inconsistency between sensors, flow sensors)

Cause	Remedy
Value inconsistency is detected between two system flow sensors or the primary feedback flow sensor value is inconsistent with the redundant feedback sensor value.	• Check the wiring and input of the associated sensors according to the wiring diagram. • Check the output of the associated sensors.

Related information

17. Related documents

15.2.152 Code 204-1004 (Inconsistency between sensors, differential pressure sensors)

Cause	Remedy
Value inconsistency is detected between two system differential pressure sensors or the primary feedback pressure sensor value is inconsistent with the redundant feedback sensor value.	• Check the wiring and input of the associated sensors according to the wiring diagram. • Check the output of the associated sensors.

Related information

17. Related documents

15.2.153 Code 204-1005 (Inconsistency between sensors, feedback sensor for user-defined control mode)

Cause	Remedy
The inconsistency value is detected between two sensors for user defined control mode feedback, or the primary feedback sensor value is inconsistent with the redundant feedback sensor value.	• Check the wiring and input of the associated sensors according to the wiring diagram. • Check the output of the associated sensors.

Related information

17. Related documents

15.2.154 Code 204-1006 (Inconsistency between redundant outlet temperature sensors)

Cause	Remedy
The Inconsistency value is detected between two sensors for system outlet temperature, or the primary feedback sensor value for temperature is inconsistent with the redundant feedback sensor value.	• Check the wiring and input of the associated sensors according to the wiring diagram. • Check the output of the associated sensors.

Related information

17. Related documents

15.2.155 Code 204-1007 (Inconsistency between redundant inlet temperature sensors)

Cause	Remedy
The inconsistency value is detected between two sensors for system inlet temperature, or the primary feedback sensor value for temperature is inconsistent with the redundant feedback sensor value.	• Check the wiring and input of the associated sensors according to the wiring diagram. • Check the output of the associated sensors.

Related information

17. Related documents

15.2.156 Code 204-1008 (Inconsistency between redundant differential temperature sensors)

Cause	Remedy
Value inconsistency is detected between two redundant differential temperature sensors. The inconsistency value is detected between two sensors for system differential temperature, or the primary feedback sensor value for temperature is inconsistent with the redundant feedback sensor value.	• Check the wiring and input of the associated sensors according to the wiring diagram. • Check the output of the associated sensors.

Related information

17. Related documents

15.2.157 Code 205-1001 (Digital inputs inconsistency 1)

Cause	Remedy
The digital inputs (controlled output) of level switch 1 are inconsistent.	• Check the wiring and input of the associated sensors. • Check the output of the associated sensors. • Check the configuration.

Related information

17. Related documents

15.2.158 Code 205-1002 (Digital input inconsistency 2)

Cause	Remedy
The digital inputs (controlled output) of level switch 2 are inconsistent.	• Check the wiring and input of the associated sensors. • Check the output of the associated sensors. • Check the configuration.

Related information

17. Related documents

15.2.159 Code 205-1003 (Digital input inconsistency 3)

Cause	Remedy
The digital inputs (controlled output) of level switch 3 are inconsistent.	• Check the wiring and input of the associated sensors. • Check the output of the associated sensors. • Check the configuration.

Related information

17. Related documents

15.2.160 Code 205-1004 (Digital input inconsistency 4)

Cause	Remedy
The digital inputs (controlled output) of level switch 4 are inconsistent.	• Check the wiring and input of the associated sensors. • Check the output of the associated sensors. • Check the configuration.

Related information

17. Related documents

15.2.161 Code 209 (Non-return valve fault)

Cause	Remedy
The non-return valve fault from the pump is detected by Grundfos E-pumps or CUEs.	• Check the remedies in installation and operation instructions supplied with Grundfos E-pumps and CUEs. See the section on related documents.

Related information

17. Related documents

15.2.162 Code 210 (System over pressure)

Cause	Remedy
The monitored system pressure is higher than the defined limit or the operating pressure is above the programmable high-pressure alarm limit.	• Check the wiring and input of the associated sensors. • Check the output of the associated sensors. • Check the actual pressure and the corresponding settings. • Check the configuration.

Related information

17. Related documents

15.2.163 Code 211 (Absolute system pressure low)

Cause	Remedy
The monitored system pressure is lower than the defined limit or the operating pressure is below the programmable low pressure alarm limit.	• Check the wiring and input of the associated sensors. • Check the output of the associated sensors. • Check the actual pressure and the corresponding settings. • Check the configuration.

Related information

17. Related documents

15.2.164 Code 215 (Pipe filling error)

Cause	Remedy
The system cannot reach the set pressure within the configured time. The pipe-filling phase failed because of wrong settings or problems in the system.	• Check the limit setting and pipes.
The pipe-filling failure is detected by Grundfos E-pumps or CUEs.	• Check the remedies in installation and operation instructions supplied with Grundfos E-pumps and CUEs. See the section on related documents.

Related information

17. Related documents

15.2.165 Code 225 (Communication fault, pump module)

Cause	Remedy
The communication between the pumps and the controller is lost.	• Check the power of the pumps. • Check the GENI communication cable between the pumps and the controller.

Related information

17. Related documents

15.2.166 Code 226-1001 (Communication fault, I/O module 1)

Cause	Remedy
The communication between the first I/O module and the controller is lost.	• Check the power of the faulty device. • Check the GENI communication cables between the faulty device and the controller.

Related information

17. Related documents

15.2.167 Code 226-1002 (Communication fault, I/O module 2)

Cause	Remedy
The communication between the second I/O module and the controller is lost.	• Check the power of the faulty device. • Check the GENI communication cables between the faulty device and the controller.

Related information

17. Related documents

15.2.168 Code 226-1003 (Communication fault, I/O module 3)

Cause	Remedy
The communication between the third I/O module and the controller is lost.	• Check the power of the faulty device. • Check the GENI communication cables between the faulty device and the controller.

Related information

17. Related documents

15.2.169 Code 226-1004 (Communication fault, I/O module 4)

Cause	Remedy
The communication between the fourth I/O module and the controller is lost.	• Check the power of the faulty device. • Check the GENI communication cables between the faulty device and the controller.

Related information

17. Related documents

15.2.170 Code 226-1005 (Communication fault, I/O module 5)

Cause	Remedy
The communication between the fifth I/O module and the controller is lost.	• Check the power of the faulty device. • Check the GENI communication cables between the faulty device and the controller.

Related information

17. Related documents

15.2.171 Code 226-1006 (Communication fault, I/O module 6)

Cause	Remedy
The communication between the sixth I/O module and the controller is lost.	• Check the power of the faulty device. • Check the GENI communication cables between the faulty device and the controller.

Related information

17. Related documents

15.2.172 Code 226-1007 (Communication fault, I/O module 7)

Cause	Remedy
The communication between the seventh I/O module and the controller is lost.	• Check the power of the faulty device. • Check the GENI communication cables between the faulty device and the controller.

Related information

17. Related documents

15.2.173 Code 226-1008 (Communication fault, I/O module 8)

Cause	Remedy
The communication between the eighth I/O module and the controller is lost.	• Check the power of the faulty device. • Check the GENI communication cables between the faulty device and the controller.

Related information

17. Related documents

15.2.174 Code 226-1009 (Communication fault, I/O module 9)

Cause	Remedy
The communication between the ninth I/O module and the controller is lost.	• Check the power of the faulty device. • Check the GENI communication cables between the faulty device and the controller.

Related information

17. Related documents

15.2.175 Code 226-1010 (Communication fault, I/O module 10)

Cause	Remedy
The communication between the tenth I/O module and the controller is lost.	• Check the power of the faulty device. • Check the GENI communication cables between the faulty device and the controller.

Related information

17. Related documents

15.2.176 Code 226-1011 (Communication fault, I/O module 11)

Cause	Remedy
The communication between the eleventh I/O module and the controller is lost.	• Check the power of the faulty device. • Check the GENI communication cables between the faulty device and the controller.

Related information

17. Related documents

15.2.177 Code 226-1012 (Communication fault, I/O module 12)

Cause	Remedy
The communication between the twelfth I/O module and the controller is lost.	• Check the power of the faulty device. • Check the GENI communication cables between the faulty device and the controller.

Related information

17. Related documents

15.2.178 Code 226-1013 (Communication fault, I/O module 13)

Cause	Remedy
The communication between the thirteenth I/O module and the controller is lost.	• Check the power of the faulty device. • Check the GENI communication cables between the faulty device and the controller.

Related information

17. Related documents

15.2.179 Code 226-1014 (Communication fault, I/O module 14)

Cause	Remedy
The communication between the fourteenth I/O module and the controller is lost.	• Check the power of the faulty device. • Check the GENI communication cables between the faulty device and the controller.

Related information

17. Related documents

15.2.180 Code 226-1015 (Communication fault, I/O module 15)

Cause	Remedy
The communication between the fifteenth I/O module and the controller is lost.	• Check the power of the faulty device. • Check the GENI communication cables between the faulty device and the controller.

Related information

17. Related documents

15.2.181 Code 226-1016 (Communication fault, I/O module 16)

Cause	Remedy
The communication between the sixteenth I/O module and the controller is lost.	• Check the power of the faulty device. • Check the GENI communication cables between the faulty device and the controller.

Related information

17. Related documents

15.2.182 Code 236-1001 (Pump 1 in alarm)

Cause	Remedy
It is indicated that the pump 1 has one or more alarms in the system.	• Check the remedies in installation and operation instructions supplied with Grundfos E-pumps and CUEs. See the section on related documents. • Clear pump alerts.

Related information

17. Related documents

15.2.183 Code 236-1002 (Pump 2 in alarm)

Cause	Remedy
It is indicated that the pump 2 has one or more alarms in the system.	• Check the remedies in installation and operation instructions supplied with Grundfos E-pumps and CUEs. See the section on related documents. • Clear pump alerts.

Related information

17. Related documents

15.2.184 Code 236-1003 (Pump 3 in alarm)

Cause	Remedy
It is indicated that the pump 3 has one or more alarms in the system.	• Check the remedies in installation and operation instructions supplied with Grundfos E-pumps and CUEs. See the section on related documents. • Clear pump alerts.

Related information

17. Related documents

15.2.185 Code 236-1004 (Pump 4 in alarm)

Cause	Remedy
It is indicated that the pump 4 has one or more alarms in the system.	• Check the remedies in installation and operation instructions supplied with Grundfos E-pumps and CUEs. See the section on related documents. • Clear pump alerts.

Related information

17. Related documents

15.2.186 Code 236-1005 (Pump 5 in alarm)

Cause	Remedy
It is indicated that the pump 5 has one or more alarms in the system.	• Check the remedies in installation and operation instructions supplied with Grundfos E-pumps and CUEs. See the section on related documents. • Clear pump alerts.

Related information

17. Related documents

15.2.187 Code 236-1006 (Pump 6 in alarm)

Cause	Remedy
It is indicated that the pump 6 has one or more alarms in the system.	• Check the remedies in installation and operation instructions supplied with Grundfos E-pumps and CUEs. See the section on related documents. • Clear pump alerts.

Related information

17. Related documents

15.2.188 Code 236-1021 (Pilot pump in alarm)

Cause	Remedy
There are one or more alarms of the pilot pump in the system.	• Check the remedies in installation and operation instructions supplied with Grundfos E-pumps and CUEs. See the section on related documents. • Clear pump alerts.

Related information

17. Related documents

15.2.189 Code 240 (Motor bearings need to be lubricated)

Cause	Remedy
The motor bearings need to be lubricated and this is detected by Grundfos E-pumps or CUEs.	• Check the remedies in installation and operation instructions supplied with Grundfos E-pumps and CUEs. See the section on related documents.

Related information

17. Related documents

15.2.190 Code 241 (Motor phase failure)

Cause	Remedy
The motor phase failure is detected by Grundfos E-pumps or CUEs.	• Check the remedies in installation and operation instructions supplied with Grundfos E-pumps and CUEs. See the section on related documents.

Related information

17. Related documents

15.2.191 Code 242 (Auto motor model recognition failed)

Cause	Remedy
The power optimisation estimation failure is detected by Grundfos E-pump or CUEs.	• Check the remedies in installation and operation instructions supplied with Grundfos E-pumps and CUEs. See the section on related documents.

Related information

17. Related documents

15.2.192 Code 242-1001 (Estimation aborted due to sudden change in load)

Cause	Remedy
Power optimisation estimation failed due to sudden change in system load.	• Check the system load and restart power optimisation estimation after the system load comes back to normal.

Related information

17. Related documents

15.2.193 Code 242-1002 (Motor model verification failed)

Cause	Remedy
Power optimisation estimation failed due to low quality of flow.	• Check the system flow, increase the system flow and restart the power optimisation estimation after the system flow is increased and stable.

Related information

17. Related documents

15.2.194 Code 242-1003 (Estimation aborted by external causes)

Cause	Remedy
Power optimisation estimation failed due to external causes, for example, the system operation mode changed to motor manual start/stop, other than AUTO.	• Check the system control mode, restart the power optimisation estimation when the system control mode keeps as AUTO.

Related information

17. Related documents

15.2.195 Code 242-1004 (Estimation has failed due to motor cut-in failure)

Cause	Remedy
Power optimisation estimation failed because the transition from zero flow to flow was not detected during the estimation cut-in and parameters could not be identified.	• Check the non-return valve. If the non-return valve doesn't work normally, replace it. • Check the pump power. If the pump power differs significantly with each other at the same speed, contact Grundfos service. • Restart power optimization estimation when the non-return valve and pump power come back to normal.

Related information

17. Related documents

15.2.196 Code 242-1005 (Estimation has failed due to timeout)

Cause	Remedy
Power optimisation estimation failed due to timeout.	• Clear all other power optimisation estimation alert and restart power optimisation estimation. • Contact Grundfos.

Related information

17. Related documents

15.2.197 Code 242-1006 (Model recognition failure detected by motor driver)

Cause	Remedy
The power optimisation estimation failed due to the wrong precondition.	• Check if the system can get differential pressure through the configured sensors. • Check if the system can get system or pump power either from the bus or from the analog input.

Related information

17. Related documents

16. Technical data

16.1 Mechanical data

Technical data	Value
Ambient temperature	-5 to 40 °C
Ambient temperature for the US market	41 to 104 °F
Relative humidity	Maximum 90 %

16.2 Electrical data

Technical data	Value
Supply voltage	See the nameplate.
Backup fuse	See the wiring diagram supplied with the panel.
Digital output of GENIECON UNIT	30 VDC/250 VAC, Max. 2 A Minimum contact load: 5 VDC, 10 mA to 100 mA
Digital Input of GENIECON UNIT	Active level: low (GND) Open circuit voltage: Max. 24 VDC Closed circuit current: Min. 5 mA DC Upper trigger level: 12.0 VDC Lower trigger level: 9.75 VDC Frequency range: Max. 20 Hz
Analogue and digital Input of GENIECON UNIT	• Analogue Input: - 0-20 mA or 4-20 mA or 0-10 VDC - Tolerance: ± 3.3 % full scale - Repetitive accuracy: ± 1 % full scale - Input resistance current: ≤ 300 Ω - Input resistance voltage: > 50 kΩ • Digital input: - Open circuit voltage: Max. 24 VDC - Closed circuit current: Min. 5 mA DC - Upper trigger level: 12.0 VDC - Lower trigger level: 9.75 VDC - Frequency range: Max. 20 Hz

For other technical data of GENIECON UNIT, see the section on technical data of the installation and operating instructions through the link or QR code below:

	QR92956748	*GPC link*

17. Related documents

Book name	Part number	QR code
GENIECON UNIT installation and operating instructions	92956748	QR92956748
GENIECON PANEL quick guide	92956762	QR92956762
GENIECON PANEL application and operating instructions	93049481	QR93049481
IO 243 installation and operating instructions	92852208	QR92852208
CUE installation and operating instructions	-	*GPC link for CUE documents*
Wiring diagram [1]	-	-

[1] This is a file delivered with the product.

18. Disposing of the product

This product or parts of it must be disposed of in an environmentally sound way.

1. Use the public or private waste collection service.
2. If this is not possible, contact the nearest Grundfos company or service workshop.

	The crossed-out wheelie bin symbol on a product means that it must be disposed of separately from household waste. When a product marked with this symbol reaches its end of life, take it to a collection point designated by the local waste disposal authorities. The separate collection and recycling of such products will help protect the environment and human health.

See also end-of-life information at *www.grundfos.com/product-recycling*.

19. Document quality feedback

To provide feedback about this document, use your smart device to scan the QR code.

FEEDBACK92956760

Click here to submit your feedback

Argentina
Bombas GRUNDFOS de Argentina S.A.
Ruta Panamericana km. 37.500industin
1619 - Garín Pcia. de B.A.
Tel.: +54-3327 414 444
Fax: +54-3327 45 3190

Australia
GRUNDFOS Pumps Pty. Ltd.
P.O. Box 2040
Regency Park
South Australia 5942
Tel.: +61-8-8461-4611
Fax: +61-8-8340-0155

Austria
GRUNDFOS Pumpen Vertrieb Ges.m.b.H.
Grundfosstraße 2
A-5082 Grödig/Salzburg
Tel.: +43-6246-883-0
Fax: +43-6246-883-30

Belgium
N.V. GRUNDFOS Bellux S.A.
Boomsesteenweg 81-83
B-2630 Aartselaar
Tel.: +32-3-870 7300
Fax: +32-3-870 7301

Bosnia and Herzegovina
GRUNDFOS Sarajevo
Zmaja od Bosne 7-7A
BiH-71000 Sarajevo
Tel.: +387 33 592 480
Fax: +387 33 590 465
www.ba.grundfos.com
E-mail: grundfos@bih.net.ba

Brazil
BOMBAS GRUNDFOS DO BRASIL
Av. Humberto de Alencar Castelo Branco, 630
CEP 09850 - 300
São Bernardo do Campo - SP
Tel.: +55-11 4393 5533
Fax: +55-11 4343 5015

Bulgaria
Grundfos Bulgaria EOOD
Slatina District
Iztochna Tangenta street no. 100
BG - 1592 Sofia
Tel.: +359 2 49 22 200
Fax: +359 2 49 22 201
E-mail: bulgaria@grundfos.bg

Canada
GRUNDFOS Canada inc.
2941 Brighton Road
Oakville, Ontario
L6H 6C9
Tel.: +1-905 829 9533
Fax: +1-905 829 9512

China
GRUNDFOS Pumps (Shanghai) Co. Ltd.
10F The Hub, No. 33 Suhong Road
Minhang District
Shanghai 201106 PRC
Tel.: +86 21 612 252 22
Fax: +86 21 612 253 33

Colombia
GRUNDFOS Colombia S.A.S.
Km 1.5 vía Siberia-Cota Conj. Potrero Chico,
Parque Empresarial Arcos de Cota Bod. 1A.
Cota, Cundinamarca
Tel.: +57(1)-2913444
Fax: +57(1)-8764586

Croatia
GRUNDFOS CROATIA d.o.o.
Buzinski prilaz 38, Buzin
HR-10010 Zagreb
Tel.: +385 1 6595 400
Fax: +385 1 6595 499
www.hr.grundfos.com

Czech Republic
GRUNDFOS Sales Czechia and Slovakia s.r.o.
Čajkovského 21
779 00 Olomouc
Tel.: +420-585-716 111

Denmark
GRUNDFOS DK A/S
Martin Bachs Vej 3
DK-8850 Bjerringbro
Tel.: +45-87 50 50 50
Fax: +45-87 50 51 51
E-mail: info_GDK@grundfos.com
www.grundfos.com/DK

Estonia
GRUNDFOS Pumps Eesti OÜ
Peterburi tee 92G
11415 Tallinn
Tel.: + 372 606 1690
Fax: + 372 606 1691

Finland
OY GRUNDFOS Pumput AB
Trukkikuja 1
FI-01360 Vantaa
Tel.: +358-(0) 207 889 500

France
Pompes GRUNDFOS Distribution S.A.
Parc d'Activités de Chesnes
57, rue de Malacombe
F-38290 St. Quentin Fallavier (Lyon)
Tel.: +33-4 74 82 15 15
Fax: +33-4 74 94 10 51

Germany
GRUNDFOS GMBH
Schlüterstr. 33
40699 Erkrath
Tel.: +49-(0) 211 929 69-0
Fax: +49-(0) 211 929 69-3799
E-mail: infoservice@grundfos.de
Service in Deutschland:
kundendienst@grundfos.de

Greece
GRUNDFOS Hellas A.E.B.E.
20th km. Athinon-Markopoulou Av.
P.O. Box 71
GR-19002 Peania
Tel.: +0030-210-66 83 400
Fax: +0030-210-66 46 273

Hong Kong
GRUNDFOS Pumps (Hong Kong) Ltd.
Unit 1, Ground floor, Siu Wai industrial Centre
29-33 Wing Hong Street & 68 King Lam Street, Cheung Sha Wan
Kowloon
Tel.: +852-27861706 / 27861741
Fax: +852-27858664

Hungary
GRUNDFOS South East Europe Kft.
Tópark u. 8
H-2045 Törökbálint
Tel.: +36-23 511 110
Fax: +36-23 511 111

India
GRUNDFOS Pumps India Private Limited
118 Old Mahabalipuram Road
Thoraipakkam
Chennai 600 097
Tel.: +91-44 2496 6800

Indonesia
PT GRUNDFOS Pompa
Graha intirub Lt. 2 & 3
Jln. Cililitan Besar No.454. Makasar, Jakarta Timur
ID-Jakarta 13650
Tel.: +62 21-469-51900
Fax: +62 21-460 6910 / 460 6901

Ireland
GRUNDFOS (Ireland) Ltd.
Unit A, Merrywell Business Park
Ballymount Road Lower
Dublin 12
Tel.: +353-1-4089 800
Fax: +353-1-4089 830

Italy
GRUNDFOS Pompe Italia S.r.l.
Via Gran Sasso 4
I-20060 Truccazzano (Milano)
Tel.: +39-02-95838112
Fax: +39-02-95309290 / 95838461

Japan
GRUNDFOS Pumps K.K.
1-2-3, Shin-Miyakoda, Kita-ku
Hamamatsu
431-2103 Japan
Tel.: +81 53 428 4760
Fax: +81 53 428 5005

Kazakhstan
Grundfos Kazakhstan LLP
7' Kyz-Zhibek Str., Kok-Tobe micr.
KZ-050020 Almaty Kazakhstan
Tel.: +7 (727) 227-98-55/56

Korea
GRUNDFOS Pumps Korea Ltd.
6th Floor, Aju Building 679-5
Yeoksam-dong, Kangnam-ku, 135-916
Seoul, Korea
Tel.: +82-2-5317 600
Fax: +82-2-5633 725

Latvia
SIA GRUNDFOS Pumps Latvia
Deglava biznesa centrs
Augusta Deglava ielā 60
LV-1035, Rīga,
Tel.: + 371 714 9640, 7 149 641
Fax: + 371 914 9646

Lithuania
GRUNDFOS Pumps UAB
Smolensko g. 6
LT-03201 Vilnius
Tel.: + 370 52 395 430
Fax: + 370 52 395 431

Malaysia
GRUNDFOS Pumps Sdn. Bhd.
7 Jalan Peguam U1/25
Glenmarie industrial Park
40150 Shah Alam, Selangor
Tel.: +60-3-5569 2922
Fax: +60-3-5569 2866

Mexico
Bombas GRUNDFOS de México S.A. de C.V.
Boulevard TLC No. 15
Parque industrial Stiva Aeropuerto
Apodaca, N.L. 66600
Tel.: +52-81-8144 4000
Fax: +52-81-8144 4010

Netherlands
GRUNDFOS Netherlands
Veluwezoom 35
1326 AE Almere
Postbus 22015
1302 CA ALMERE
Tel.: +31-88-478 6336
Fax: +31-88-478 6332
E-mail: info_gnl@grundfos.com

New Zealand
GRUNDFOS Pumps NZ Ltd.
17 Beatrice Tinsley Crescent
North Harbour Industrial Estate
Albany, Auckland
Tel.: +64-9-415 3240
Fax: +64-9-415 3250

Norway
GRUNDFOS Pumper A/S
Strømsveien 344
Postboks 235, Leirdal
N-1011 Oslo
Tel.: +47-22 90 47 00
Fax: +47-22 32 21 50

Poland
GRUNDFOS Pompy Sp. z o.o.
ul. Klonowa 23
Baranowo k. Poznania
PL-62-081 Przeźmierowo
Tel.: (+48-61) 650 13 00
Fax: (+48-61) 650 13 50

Portugal
Bombas GRUNDFOS Portugal, S.A.
Rua Calvet de Magalhães, 241
Apartado 1079
P-2770-153 Paço de Arcos
Tel.: +351-21-440 76 00
Fax: +351-21-440 76 90

Romania
GRUNDFOS Pompe România SRL
S-PARK BUSINESS CENTER, Clădirea A2, etaj 2
Str. Tipografilor, Nr. 11-15, Sector 1, Cod 013714
Bucuresti, Romania
Tel.: 004 021 2004 100
E-mail: romania@grundfos.ro

Serbia
Grundfos Srbija d.o.o.
Omladinskih brigada 90b
11070 Novi Beograd
Tel.: +381 11 2258 740
Fax: +381 11 2281 769
www.rs.grundfos.com

Singapore
GRUNDFOS (Singapore) Pte. Ltd.
25 Jalan Tukang
Singapore 619264
Tel.: +65-6681 9688
Faxax: +65-6681 9689

Slovakia
GRUNDFOS s.r.o.
Prievozská 4D 821 09 BRATISLAVA
Tel.: +421 2 5020 1426
sk.grundfos.com

Slovenia
GRUNDFOS LJUBLJANA, d.o.o.
Leskoškova 9e, 1122 Ljubljana
Tel.: +386 (0) 1 568 06 10
Fax: +386 (0)1 568 06 19
E-mail: tehnika-si@grundfos.com

South Africa
GRUNDFOS (PTY) LTD
16 Lascelles Drive, Meadowbrook Estate
1609 Germiston, Johannesburg
Tel.: (+27) 10 248 6000
Fax: (+27) 10 248 6002
E-mail: lgradidge@grundfos.com

Spain
Bombas GRUNDFOS España S.A.
Camino de la Fuentecilla, s/n
E-28110 Algete (Madrid)
Tel.: +34-91-848 8800
Fax: +34-91-628 0465

Sweden
GRUNDFOS AB
Box 333 (Lunnagårdsgatan 6)
431 24 Mölndal
Tel.: +46 31 332 23 000
Fax: +46 31 331 94 60

Switzerland
GRUNDFOS Pumpen AG
Bruggacherstrasse 10
CH-8117 Fällanden/ZH
Tel.: +41-44-806 8111
Fax: +41-44-806 8115

Taiwan
GRUNDFOS Pumps (Taiwan) Ltd.
7 Floor, 219 Min-Chuan Road
Taichung, Taiwan, R.O.C.
Tel.: +886-4-2305 0868
Fax: +886-4-2305 0878

Thailand
GRUNDFOS (Thailand) Ltd.
92 Chaloem Phrakiat Rama 9 Road
Dokmai, Pravej, Bangkok 10250
Tel.: +66-2-725 8999
Fax: +66-2-725 8998

Turkey
GRUNDFOS POMPA San. ve Tic. Ltd. Sti.
Gebze Organize Sanayi Bölgesi
Ihsan dede Caddesi
2. yol 200. Sokak No. 204
41490 Gebze/ Kocaeli
Tel.: +90 - 262-679 7979
Fax: +90 - 262-679 7905
E-mail: satis@grundfos.com

Ukraine
ТОВ "ГРУНДФОС УКРАЇНА"
Бізнес Центр Європа
Столичне шосе, 103
м. Київ, 03131, Україна
Tel.: (+38 044) 237 04 00
Fax: (+38 044) 237 04 01
E-mail: ukraine@grundfos.com

United Arab Emirates
GRUNDFOS Gulf Distribution
P.O. Box 16768
Jebel Ali Free Zone, Dubai
Tel.: +971 4 8815 166
Fax: +971 4 8815 136

United Kingdom
GRUNDFOS Pumps Ltd.
Grovebury Road
Leighton Buzzard/Beds. LU7 4TL
Tel.: +44-1525-850000
Fax: +44-1525-850011

U.S.A.
Global Headquarters for WU
856 Koomey Road
Brookshire, Texas 77423 USA
Phone: +1-630-236-5500

Uzbekistan
Grundfos Tashkent, Uzbekistan
The Representative Office of Grundfos Kazakhstan in Uzbekistan
38a, Oybek street, Tashkent
Tel.: (+998) 71 150 3290 / 71 150 3291
Fax: (+998) 71 150 3292

© 2025 Grundfos Holding A/S, all rights reserved.

Trademarks displayed in this material, including but not limited to Grundfos and the Grundfos logo, are registered trademarks owned by The Grundfos Group.

92956760 **07.2025**

ECM: 1426116