ALPHA2 GO

Installation and operating instructions

GRUNDFOS

ALPHA2 GO

English (GB)

Installation and operating instructions 4

Original installation and operating instructions

Table of contents

1. General information . . . 4
1.1 Hazard statements . . . 4
1.2 Notes . . . 5
1.3 Recommended safety equipment . . . 5
2. Product introduction . . . 5
2.1 Product description . . . 5
2.2 Intended use . . . 5
2.3 Foreseeable misuse . . . 6
2.4 Pumped liquids . . . 6
2.5 Identification . . . 6
2.6 Approvals and markings . . . 7
3. Receiving the product . . . 7
3.1 Inspecting the product . . . 7
3.2 Scope of delivery . . . 7
4. Mechanical installation . . . 7
4.1 Mounting the pump . . . 7
4.2 Changing the pump head position . . . 8
5. Electrical connection . . . 9
5.1 Assembling the power plug . . . 9
5.2 Wiring diagram . . . 10
5.3 Control box connections . . . 10
5.4 Accessories . . . 11
6. Starting up the product . . . 12
6.1 Venting the product . . . 12
6.2 Dry-running protection . . . 12
6.3 Robust start . . . 12
7. Control functions . . . 12
7.1 Operating panel . . . 12
8. Control modes . . . 13
8.1 Constant curve . . . 13
8.2 Constant pressure . . . 14
8.3 Proportional pressure . . . 14
8.4 AUTOADAPT . . . 14
8.5 Constant flow . . . 14
8.6 PWM signal . . . 15
8.7 Supported setting of an automatic bypass valve (ABV) . . . 18
8.8 Replacement of UPM3 or UPM4 pump . . . 18
9. Setting of the product . . . 19
9.1 Enabling Bluetooth . . . 19
9.2 Connecting the product to Grundfos GO . . . 19
9.3 Setting of the pump in Grundfos GO . . . 19
9.4 Air detection and system venting . . . 19
9.5 Flow limitation . . . 19
9.6 Night setback . . . 19
9.7 Trend data . . . 20
9.8 Updating the software . . . 20
9.9 Resetting user settings . . . 20
9.10 Factory reset . . . 20
10. Service . . . 20
10.1 Dismantling the product . . . 20
11. Fault finding . . . 21
11.1 Alarm and warning code logs . . . 21
11.2 Faults indicated on the pump . . . 21
11.3 Resetting alarms and warnings manually with Grundfos GO . . . 21
11.4 Noise in the system . . . 21
11.5 Code 57 (Dry running) . . . 22
11.6 Code 51 (Blocked pump) . . . 22
11.7 Code 40 (Undervoltage) . . . 22
11.8 Code 4 (Overvoltage) . . . 22
11.9 Code 72 (Internal fault) . . . 22
11.10 Code 76 (Internal fault) . . . 22
11.11 Code 85 (Internal fault) . . . 22
11.12 Code 132 (Pump configuration corrupted or missing) . . . 22
11.13 Code 25 (Incorrect PWM configuration) . . . 23
11.14 Code 43 (Forced pumping) . . . 23
11.15 Code 35 (Air in media) . . . 23
12. Technical data . . . 23
13. Disposing of the product . . . 24
14. Document quality feedback . . . 24

1. General information

Read this document before you install the product. Installation and operation must comply with local regulations and accepted codes of good practice.

1.1 Hazard statements

The symbols and hazard statements below may appear in Grundfos installation and operating instructions, safety instructions and service instructions.

DANGER
Indicates a hazardous situation which, if not avoided, will result in death or serious personal injury.

WARNING
Indicates a hazardous situation which, if not avoided, could result in death or serious personal injury.

CAUTION
Indicates a hazardous situation which, if not avoided, could result in minor or moderate personal injury.

The hazard statements are structured in the following way:

SIGNAL WORD
Description of the hazard
Consequence of ignoring the warning

- Action to avoid the hazard.

1.2 Notes

The symbols and notes below may appear in Grundfos installation and operating instructions, safety instructions and service instructions.

Observe these instructions for explosion-proof products.

A blue or grey circle with a white graphical symbol indicates that an action must be taken.

A red or grey circle with a diagonal bar, possibly with a black graphical symbol, indicates that an action must not be taken or must be stopped.

If these instructions are not observed, it may result in malfunction or damage to the equipment.

Tips and advice that make the work easier.

1.3 Recommended safety equipment

We recommend the following safety equipment, when handling this product.

Wear safety shoes.

Wear protective gloves.

Wear safety glasses.

2. Product introduction

2.1 Product description

ALPHA2 GO is a high-efficiency circulator pump fitted with an electronically commutated motor and designed for circulating liquids in heating and air conditioning systems.

The Grundfos GO app offers a range of digital features that simplify the setup process for both new and replacement installations.

By using Grundfos GO, you can easily verify compatibility when replacing integrated and stand-alone circulator pumps, including replicating exact pump curves.

ALPHA2 GO is designed with intelligent controls modes:

- constant pressure
- proportional pressure
- constant flow
- constant curve.

Each mode has adjustable setpoints.

- The AUTOADAPT setting, available for constant and proportional pressure, removes the need to manually select the pump setpoint.
- The PWM input allows for precise control of the speed, better enabling complete system optimization.

The toolless installer plug results in fast and easy electrical connection.

The automatic self-venting ability and dry-running protection ensure quiet operation and reliability of the pump.

The product features robust startup which reduces the risk of blockages from dirt, magnetite and limescale build-up. In the unlikely case of a blocked pump, the motor attempts to continuously start at the highest possible torque, ensuring startup in tough conditions.

The ceramic shaft and bearings experience minimal wear, resulting in a longer lifespan and a reduced likelihood of noise in the system due to increased bearing clearance from wear.

When the system air detection and venting feature detects air in the system, the circulator pump pulsates to more effectively push air to the closest air removal device.

Grundfos GO also provides the ability to conveniently fault-find the system through the event log and historical trend data for flow, head, estimated media temperature and on-cycle durations.

2.2 Intended use

The pump is designed for circulating liquids in the following:

- **heat production:** boilers, heat pumps and district heating systems.
- **distribution systems:** space heating, for example, radiators, underfloor-heating systems and air-conditioning.

This pump is only for indoor use.

Related information

2.4 Pumped liquids

2.3 Foreseeable misuse

Do not use the pump for flammable, combustible or explosive liquids such as diesel oil, gasoline or similar liquids.

The pump is not a safety component and cannot be used to ensure functional safety in the final appliance.

Do not use the pump in swimming pools or marine areas.

The pump is not suitable for drinking-water applications.

2.4 Pumped liquids

The product is suitable for the following liquids:

- Clean, thin, non-aggressive and non-explosive liquids, not containing solid particles or fibres.
- In heating systems, the water must meet the requirements of accepted standards on water quality in heating systems, for example the German standard VDI 2035.
- The pH must be between 8.2 and 9.5. The minimum value depends on the water hardness and must not be below 7.4 at 4 °dH (0.712 mmol/l).
- The electrical conductivity at 25 °C must be equal to or larger than 10 µS/cm.
- Mixtures of water with antifreeze media such as glycol or ethanol with a kinematic viscosity lower than 15 mm^2/s (15 cSt).

Related information

2.2 Intended use

2.5 Identification

2.5.1 Nameplate

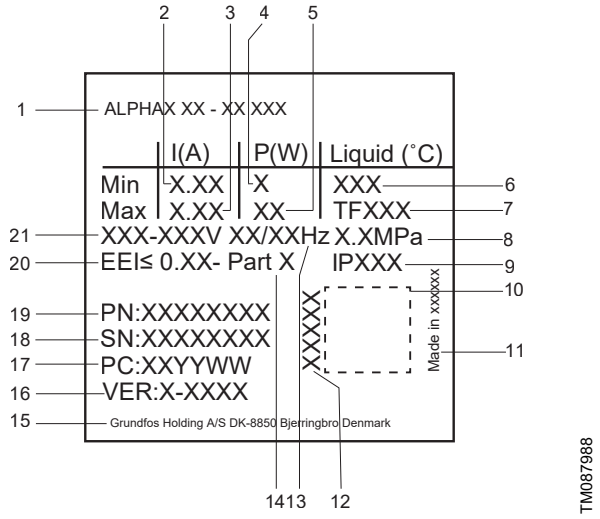

Nameplate

Pos.	Description
1	Product name
2	Min. current consumption
3	Max. current consumption
4	Min. power consumption
5	Max. power consumption
6	Min. liquid temperature
7	Max. liquid temperature (TF class)
8	Max. operating pressure
9	Enclosure class
10	Data matrix
11	Country of production
12	Combined legal product code
13	Frequency
14	Part of energy efficiency standard
15	Grundfos address
16	Version (model letter + number)
17	Factory code and production code (year and week)
18	Serial number
19	Product number
20	Energy efficiency index (EEI)
21	Rated voltage

Related information

3.1 Inspecting the product

5. Electrical connection

12. Technical data

2.5.2 Type key

Example: ALPHA2 GO 25-40 180 220-240 V

Code	Explanation	Designation
ALPHA2 GO	Grundfos circulator pump	Pump type
25	Nominal diameter (DN) of inlet and outlet ports	Connections
40	Maximum head [dm]	
130	Port-to-port length [mm]	
220-240 V	Voltage	

2.6 Approvals and markings

Any changes or modifications to this equipment not expressly approved by the party responsible for compliance could void the user's authority to operate this equipment.

CAUTION
Biological hazard
Minor or moderate personal injury
- This product is not approved for drinking water applications.

3. Receiving the product

3.1 Inspecting the product

CAUTION
Crushing of feet
Minor or moderate personal injury
- Wear safety shoes when handling the product.

CAUTION
Sharp element
Minor or moderate personal injury
- Wear protective gloves.

1. Make sure that the delivered product corresponds to the order.
2. Make sure that the voltage and frequency of the product match the voltage and frequency of the installation site.

Related information

2.5.1 Nameplate

3.2 Scope of delivery

The box contains the following items:

- 1 pump
- 1 power plug
- 2 gaskets
- insulating shells
- 1 quick guide.

4. Mechanical installation

WARNING
Electric shock
Death or serious personal injury
- A damaged product must be repaired or replaced by Grundfos or a service workshop authorized by Grundfos.

CAUTION
Crushing of feet
Minor or moderate personal injury
- Wear safety shoes when handling the product.

CAUTION
Sharp element
Minor or moderate personal injury
- Wear protective gloves.

The pump must always be installed with a horizontal motor shaft within ± 5°.

The pump is a non-submersible pump.

4.1 Mounting the pump

Make sure that the pump orientation is correct.

The arrows on the pump housing indicate the flow direction through the pump.

1. Close the inlet and outlet valves.
2. Fit the two gaskets supplied with the pump when you mount the pump in the pipes.
3. Tighten the unions.
4. Make sure to use an allowed control box position.
5. Mount the power plug.
6. Mount the PWM signal plug if used.

For illustrations of the installation, see the ALPHA2 GO quick guide.

ALPHA2 GO quick guide

Related information

4.2 Changing the pump head position

4.2 Changing the pump head position

CAUTION
Hot surface
Minor or moderate personal injury

- Position the pump so that persons cannot accidentally come into contact with hot surfaces.
- The pump housing may be hot due to the pumped liquid being scalding hot. Close the isolating valves on both sides of the pump and wait for the pump housing to cool down.

WARNING
Pressurised system
Minor or moderate personal injury

- Before disassembling the pump, drain the system or close the isolating valves on both sides of the pump. The pumped liquid may be under high pressure.

To change the position of the pump head, do as follows:

1. Loosen and remove the four screws.

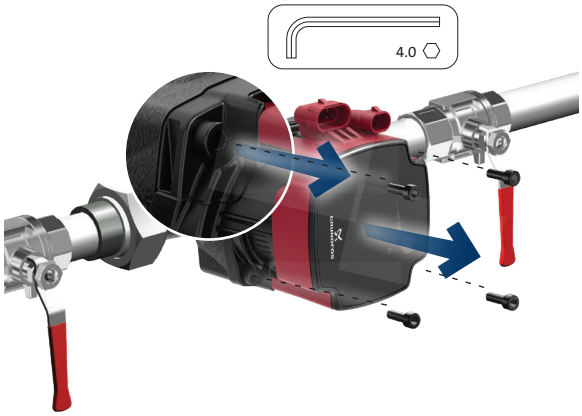

TM087974

2. Turn the pump head to the desired position.

TM087975

The control box can be turned in steps of 90°.

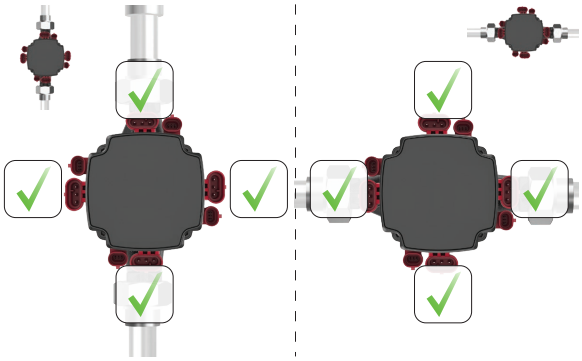

TM087893

ALPHA2 GO

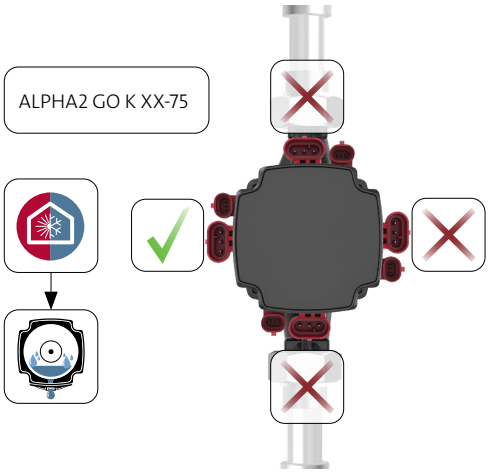

TM088798

ALPHA2 GO K version

3. Insert and cross-tighten the screws (torque 5 Nm).

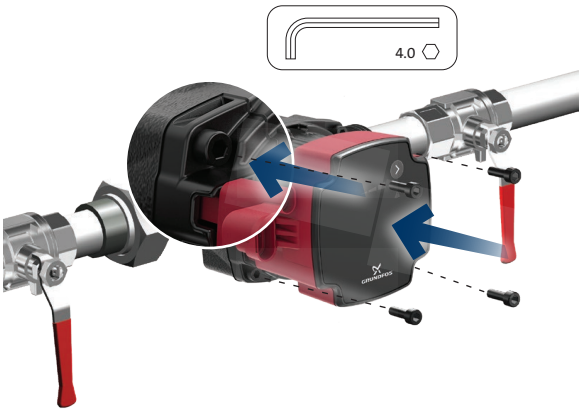

TM087976

Related information

4.1 Mounting the pump

5. Electrical connection

WARNING
Electric shock
Death or serious personal injury

- Switch off the power supply before you start any work on the product. Make sure that the power supply cannot be switched on accidentally.
- Connect the pump to earth.
- In case of an insulation fault, the fault current may be a DC or pulsating DC. Observe national legislation about requirements for and selection of Residual Current Device (RCD) when installing the product.
- All electrical connections must be carried out by a qualified electrician in accordance with local regulations.

- The pump requires no external motor protection.
- Check that the supply voltage and frequency correspond to the values stated on the nameplate.

Related information

2.5.1 Nameplate

5.1 Assembling the power plug

1. Unscrew the cable gland.

TM087997

2. Insert the power cable into the cable gland and cover.

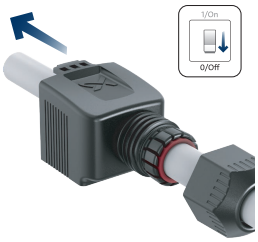

TM087996

3. Strip the wires according to the measurements below.

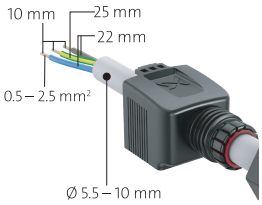

TM087995

4. Open the wire locks.

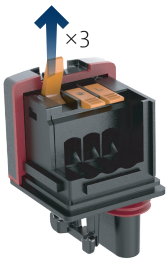

TM087994

5. Insert the wires according to the colour code. Blue: neutral (N), black or brown: phase (L), yellow/green: earth.

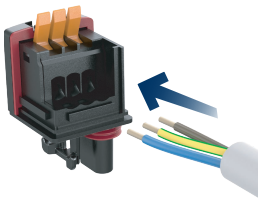

TM087993

6. Close the wire locks.

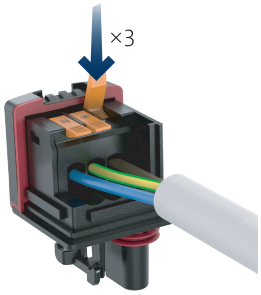

TM087992

7. Slide the cover in.

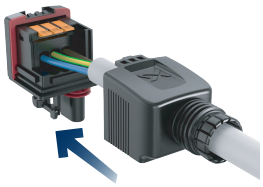

TM087991

8. Click the cover in place and tighten the cable gland.

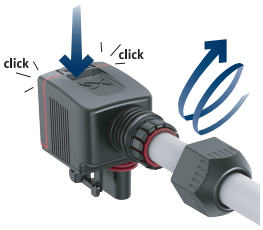

TM087990

Related information

5.1.1 Rotating the power plug 90°

5.1.1 Rotating the power plug 90°

Before assembling the power plug, the following preparations must be completed:

1. Remove the cover.

TM089766

2. Lift the back plate of the plug.

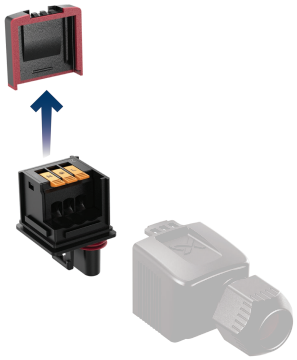

TM089767

3. Turn the plug 90° left.

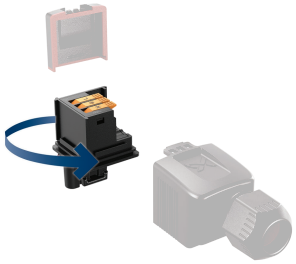

TM089768

4. Place the back plate in the 90° position.

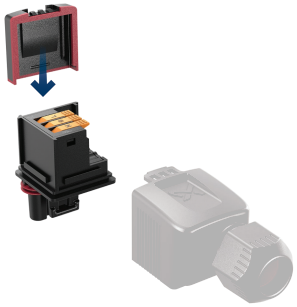

TM089769

5. Slide the cover back on.

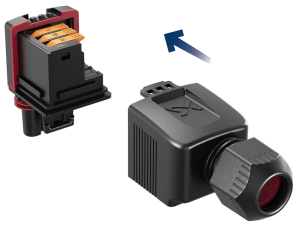

TM089770

Related information

5.1 Assembling the power plug

5.2 Wiring diagram

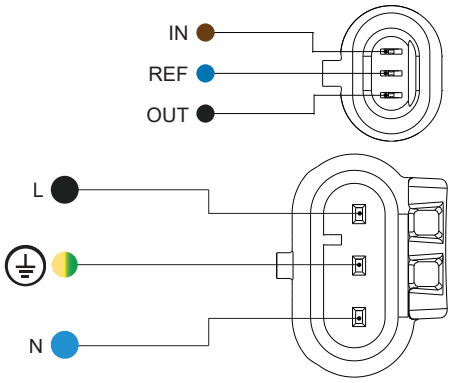

TM089307

Power and signal plug

Pos.	Description	Wire colour
IN	PWM input	Brown
REF	Signal reference	Blue
OUT	PWM output	Black
L	Phase	Black or brown
⏚	Earth	Yellow/green
N	Neutral	Blue

5.3 Control box connections

All control boxes have two electrical inlets placed on one side:

- power inlet
- signal inlet.

The signal inlet is galvanically isolated from the power supply of the circulator pump. There is therefore no risk of electrical shock if touching the signal inlet. Furthermore, the signal plug is "water tight" protecting against ingress of liquids into the control box.

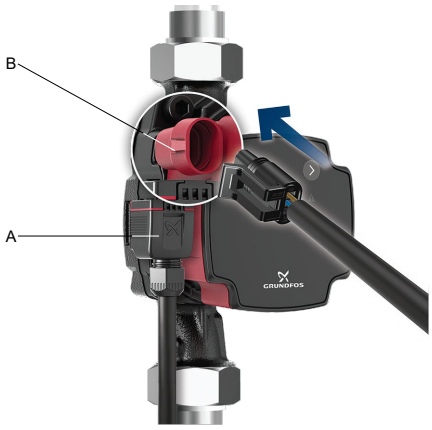

TM089771

Pos.	Description
A	Power inlet (superseal)
B	Signal inlet (mini superseal)

5.4 Accessories

Power cable adapters

	Description	Length [mm]	Product number
	Superseal Molex cable adapter, overmoulded, with rubber cap	150	99165311
	Superseal Volex cable adapter, overmoulded, with rubber cap	150	99165312
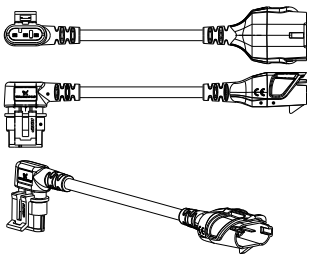	Superseal to ALPHA plug	145	93296229

Signal cable and adapter

	Description	Length [mm]	Product number
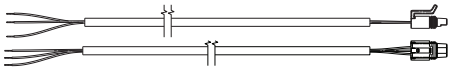	Mini superseal signal cable	2000	99165309
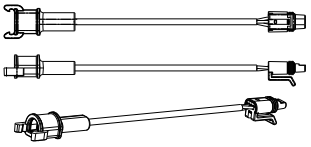	Mini superseal to FCI signal cable adapter	150	93348101

6. Starting up the product

1. Fill the system with liquid and vent it.
2. Make sure the required minimum inlet pressure is available at the pump inlet.
3. Switch on the power supply.
4. Check if the external controller sends a signal to the pump.

You can change the settings on the operating panel or via Grundfos GO. We recommend to follow the guided setup in Grundfos GO.

Related information

6.1 Venting the product
7.1 Operating panel
9.2 Connecting the product to Grundfos GO

6.1 Venting the product

Small air pockets trapped inside the pump may cause noise when starting up the pump. However, because the pump is self-venting through the system, the noise ceases over a period of time. We recommend venting the pump in new installations or when the pipes have been emptied and refilled with water. You can vent the pump via Grundfos GO.

- If you follow the guided setup, you are asked if you want to vent the pump now.
- If you do not follow the guided setup, you can access the venting settings via the **Settings** menu.

! The pump must not run dry.
You cannot vent the system through the pump.

Related information

6. Starting up the product
7.1 Operating panel
9.2 Connecting the product to Grundfos GO

6.2 Dry-running protection

The dry-running protection protects the pump against dry running during startup and normal operation.

Startup

If water has not been detected before (new pump), the pump does a detection cycle to verify that water is present. If water is not detected during the first cycle, the pump retries several times.

If water is still not detected, the pump stops, the warning and alarm symbol on the operating panel is flashing red and the error code E4 is displayed on the operating panel.

Normal operation

If dry running is detected during normal operation, the pump retries several times. If dry running continues, the pump stops, the warning and alarm symbol on the display is flashing red and the error code E4 is displayed on the operating panel

The pump can be restarted by pressing the **Selection** button on the pump. The pump repeats the dry-running detection every 25 hours to verify that the pump is not running dry. Note: The pump can sustain 25 hours of dry-running operation.

6.3 Robust start

The non-magnetic shaft and bearings reduce the risk of blockages from dirt or magnetite, while the bearing system helps prevent limescale build-up. In the unlikely case of a blocked pump, the motor continuously attempts to start at the highest possible torque, ensuring startup in tough conditions.

7. Control functions

7.1 Operating panel

LEDs and buttons on the pump display.

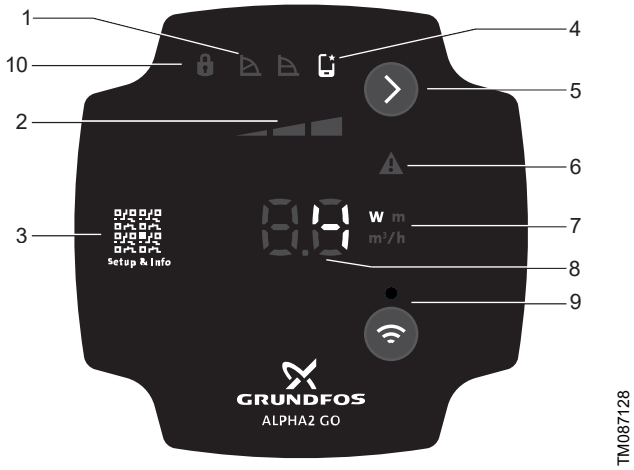

ALPHA2 GO

Pos.	Description
1	Control mode The LED shows the operating mode of the product.
2	Settings for the selected control mode Use the **Selection** button to toggle between I, II and III.
3	QR code The QR code links to information about the pump and how to set it.
4	If lit, the pump has been set via Grundfos GO.
5	Selection button Use this button to select control mode and settings.
6	Warning and alarm A warning is indicated with yellow, and the pump continues operation. An alarm is indicated with red, and the pump stops.
7	Unit The LED shows the unit used for the number to the left. W = watt, m = metre, m^3/h = cubic metre per hour.
8	The LED indicates: • power consumption [W] • head [m] • flow rate [m^3/h] • error code
9	Connect button Use this button to activate and deactivate the wireless Bluetooth connection. • Press the button once to activate Bluetooth. • Press and hold the button for 15 seconds to deactivate Bluetooth.
10	Lock The LED indicates that the operating panel is locked and no buttons can be used. The operating panel can only be locked and unlocked via Grundfos GO.

Related information

6. Starting up the product
6.1 Venting the product
7.1.1 Overview of LEDs
8. Control modes
9. Setting of the product

7.1.1 Overview of LEDs

The LEDs indicate the control mode, setting and operating status.

Factory setting

The pump is factory set to constant curve, setting II.

Active light fields	Description
	Advanced mode The control mode is set via Grundfos GO. When the pump is set via Grundfos GO, the icon is lit and the control modes and settings on the operating panel are switched off.
	Constant-pressure mode
	Proportional-pressure mode
	Setting I
	Setting II
	Setting III
AUTO ADAPT	AUTOADAPT mode
	The pump is set to **STOP** in Grundfos GO or by an active PWM stop signal.

When the symbols for the constant-pressure and proportional-pressure modes are off, the pump is running in constant-curve mode.

Related information

7.1 Operating panel

7.1.2 Power saving

In order to lower the energy consumption and heat generation, the operating panel goes into power saving mode after 15 minutes of inactivity. The power saving mode switches off the LEDs in the middle including the dot and the units.

- To reactivate the pump from the power saving mode, press the **Selection** button.
- If a warning or an alarm is present during power saving mode, only the yellow or red LED will be lit. Press the **Selection** button to see the error code.
- If the operating panel is locked via Grundfos GO, the lock icon on the operating panel will be lit in power saving mode.
- The power saving function can be disabled via Grundfos GO.

8. Control modes

ALPHA2 GO can be set to the following control modes:

- constant curve
- proportional pressure
- constant pressure
- constant flow
- external control (PWM)
- replacement mode.

All control modes can be set in Grundfos GO. However, only constant curve, constant pressure and proportional pressure can be set on the operating panel.

Related information

7.1 Operating panel

8.1 Constant curve

In the constant-curve mode, the pump runs at a constant curve, which means that it runs at constant speed or power. The pump performance follows the selected constant curve. This control mode is especially suitable in applications where the characteristics of the heating system are steady, and the emitters require a constant flow. The selection of the constant-curve setting depends on the characteristics of the heating system and the actual required flow and heat demand.

The curve's setpoint is user defined in Grundfos GO. The speed in percentage of maximum speed can be chosen anywhere between the minimum and maximum constant curve in intervals of 1 %.

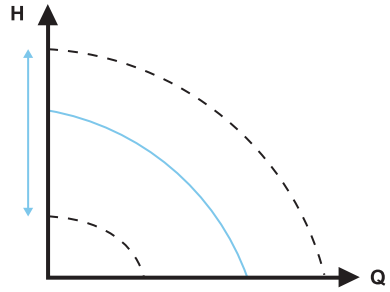

TM071005

Constant curve

8.2 Constant pressure

In the constant-pressure mode, the pump runs at constant pressure, which means the head (pressure difference) is kept constant, regardless of the heat demand (actual number of open zones). The pump performance follows the selected constant-pressure curve.

This control mode is especially suitable for underfloor heating and applications where the pump is used to supply a common manifold for multiple zones . The head across each zone will remain constant, independent of how many zones request heat. Thus a constant flow in each zone will be maintained, independent of other zones. The selection of the constant-pressure setting depends on the characteristics of the zones in the heating system and the actual heat demand.

The curve's setpoint is user defined in Grundfos GO. The setpoint can be chosen anywhere between the minimum and maximum constant-pressure curve in intervals of 0.1 m.

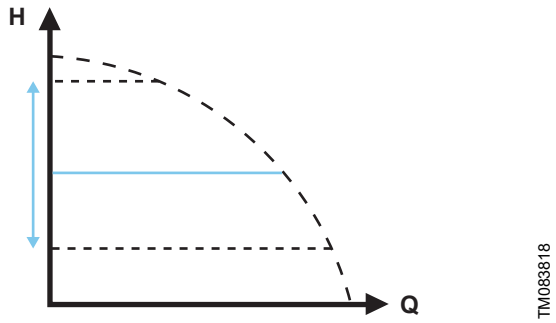

Constant pressure

8.3 Proportional pressure

In the proportional-pressure mode, the pump runs at proportional pressure, which means the head (pressure) is reduced at falling heat demand and increased at rising heat demand. The pump performance follows the selected proportional-pressure curve. This control mode is especially suitable for applications where the heat emitters are equipped with a TRV (thermostatic radiator valve) which controls the flow depending on the room temperature. At increased flow, the losses in the distribution system (pipes and fittings) increase, hence the pumps increase the pressure to compensate and vice versa, hereby maintaining an almost constant differential pressure across the thermostatic radiator valve.

The proportional-pressure mode setpoint depends on the heating system's characteristics and the actual heat demand.

The curve's setpoint is user defined in Grundfos GO. The setpoint can be chosen anywhere between the minimum and maximum proportional curve in intervals of 0.1 m. The head against a closed valve is half the setpoint H_{set}, although never below 1 m.

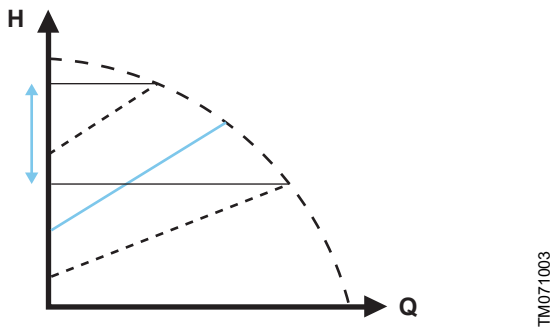

Proportional-pressure settings

8.4 AUTOADAPT

AUTOADAPT is an integrated function in the constant-pressure and proportional-pressure modes.

AUTOADAPT selects the best control curve under the given operating conditions. The pump performance is automatically adjusted to the actual heat demand, that is the size of the system and the changing heat demand over time, by continuously selecting either a proportional-pressure curve or constant-pressure curve within the AUTOADAPT performance range.

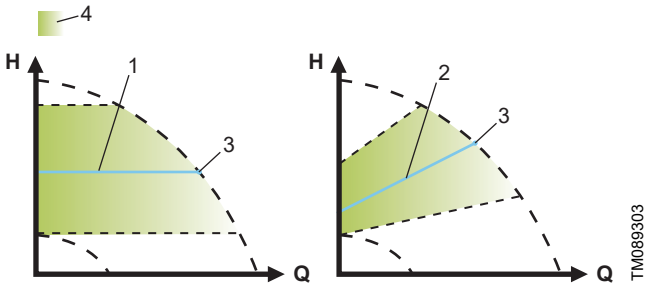

AUTOADAPT

Pos.	Description
1	Constant-pressure curve
2	Proportional-pressure curve
3	Setpoint
4	AUTOADAPT performance range

Do not expect an optimal pump setting from day one. If the power supply fails or is disconnected, the pump stores the AUTOADAPT setting in an internal memory and resumes the automatic adjustment when the power supply has been restored.

This function can only be set via Grundfos GO.

8.5 Constant flow

In this control mode, the pump maintains a constant flow in the system independently of the head.

The curve's setpoint is user defined only in Grundfos GO. The setpoint can be chosen anywhere between the minimum and maximum flow curve in intervals of 0.1 m^3/h.

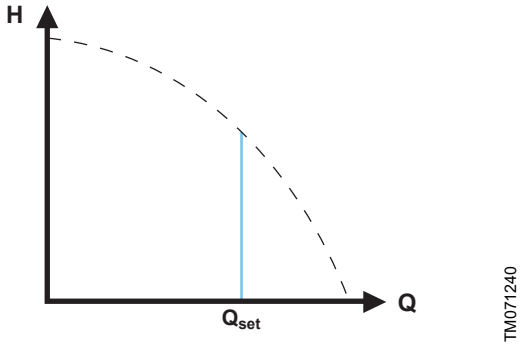

Constant-flow curve

We recommend that you select this control mode if you know the desired flow rate to the system.

Overview of ALPHA2 GO flow rates:

Pump variant	Lower flow limit [m^3/h]	Upper flow limit [m^3/h]
ALPHA2 GO XX-40	0.25	2.0
ALPHA2 GO XX-75	0.25	3.5

8.6 PWM signal

A PWM (Pulse Width Modulation) signal is used in pumps to control their speed and flow rate efficiently. External PWM control mode can only be selected via Grundfos GO.

8.6.1 Installation with PWM signal

In a replacement situation where the old pump was controlled with a PWM signal, the ALPHA2 GO pump only needs to be connected to power and an external signal and configurated with Grundfos GO to be ready to operate.

In a new pump setup where the external PWM signal is to be configured, you need the following information:

1. **PWM signal specifications**:
   - **Frequency**: The PWM signal frequency must match the requirements of the pump.
   - **Duty cycle**: This determines the speed of the pump.
   - **Voltage levels**: Ensure that the PWM signal voltage levels are matching the requirements of the pump.
2. **Feedback mechanism**:
   - **PWM feedback signal**: This signal can provide information about the pump's operating status, such as power consumption and speed.
   - Feedback mechanisms in circulator pumps with PWM control are essential for monitoring and adjusting the pump's performance.

     a. **Operating status**:
     - The feedback signal provides real-time information about the pump's operating status. For example, it can indicate whether the pump is running, its speed and any potential issues.

     b. **Flow or power consumption**:
     - The feedback signal can reflect the flow or power consumption of the pump. This helps in monitoring energy usage and ensuring the pump operates efficiently.

     c. **Error detection**:
     - If the pump encounters an issue, such as a blocked rotor or low power voltage, the feedback signal can indicate this by changing its duty cycle. For instance, a blocked rotor will set the feedback signal to 90 %, triggering a warning.

     d. **System integration**:
     - The feedback signal can be used to compare the actual operating status of the pump with the desired settings. This allows for precise control and adjustments to maintain optimal performance.

     e. **Protection features**:
     - In the event of signal loss or cable breakage, the feedback mechanism ensures that the pump operates in the safest possible way, depending on the system in which the pump is mounted.

     These feedback mechanisms are crucial for maintaining the reliability and efficiency of circulator pumps in various applications, such as heating systems, heat pumps and solar systems.

8.6.2 PWM interface

The PWM interface consists of an galvanically isolated circuit connecting the external control signal to the pump. The interface translates the external signal into a signal type that the microprocessor can understand.

The galvanically isolated interface ensures that the user cannot get into contact with dangerous voltage if the signal wires are touched when the pump is connected to power.

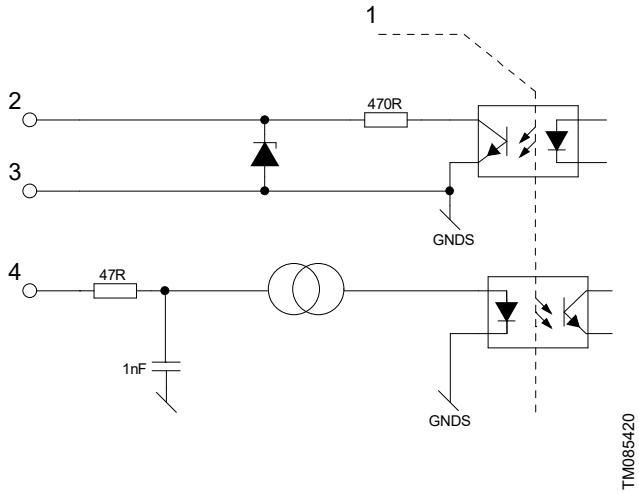

Schematic drawing, equivalent interface

Pos.	Description
1	Galvanic isolation
2	PWM output
3	Signal reference (without connection to protective earth)
4	PWM input

8.6.3 Digital low-voltage PWM signal

The square-wave PWM signal is designed for a frequency range of 100 to 1500 Hz for the standard input profiles. The PWM signal is used to select the speed (speed command) and as feedback signal. The PWM frequency on the feedback signal is fixed at 75 Hz in the pump.

Duty cycle

d % = 100 × t/T

Example	Rating
T = 2 ms (500 Hz)	U_{IH} = 4-24 V
t = 0.6 ms	U_{IL} ≤ 1 V
d % = 100 × 0.6 / 2 = 30 %	4.5 mA ≤ IH ≤ 10 mA (depending on U_{IH})

Example

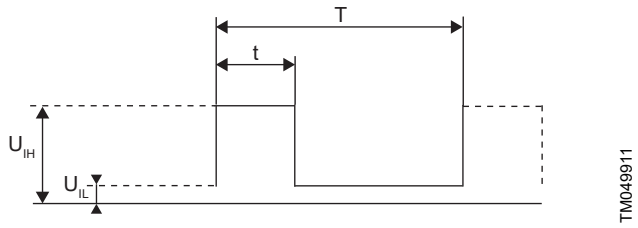

PWM signal

Abbreviation	Description
t	Duration of the pulse signal [s]
T	Total period of time [s]
U_{IH}	High-level input voltage
U_{IL}	Low-level input voltage

8.6.4 PWM input signal profile A (heating)

At high PWM signal duty cycles, a hysteresis prevents the pump from starting and stopping if the input signal fluctuates around the shifting point. At low PWM signal duty cycles, the pump speed is high for safety reasons. In case a cable breaks when mounted in a system, the pump starts to run at maximum speed. This is suitable for both boilers and heat pumps to ensure that the pump transfers heat even if a cable breaks.

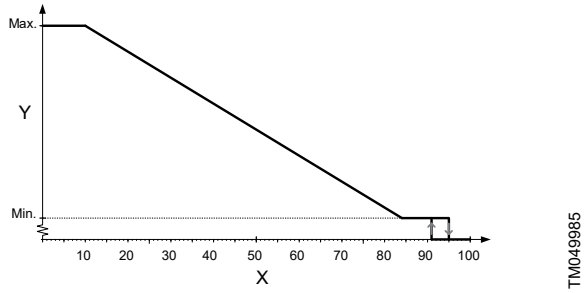

PWM input profile A (heating)

Axis	Value
X	Input duty cycle
Y	Speed

PWM input duty cycle	Pump status
PWM signal ≤ 10 %	Max. speed
10 % < PWM signal ≤ 84 %	Variable speed from min. to max. speed
84 % < PWM signal ≤ 91 %	Min. speed
91 % < PWM signal ≤ 95 %	Hysteresis area: on/off
95 % < PWM signal ≤ 100 %	Standby mode: off

8.6.5 PWM feedback signal

The PWM feedback signal offers the same pump information as in bus systems:

- current power consumption or flow estimation
- warning
- alarm
- operating status.

Alarms on power consumption

Alarm output signals are available because some PWM output duty cycles are dedicated to alarm information. If a supply voltage is measured below the specified supply voltage range, the output duty cycle is set to 75 %. If the rotor is locked due to deposits in the hydraulics, the output duty cycle is set to 90 % as this alarm has a higher priority.

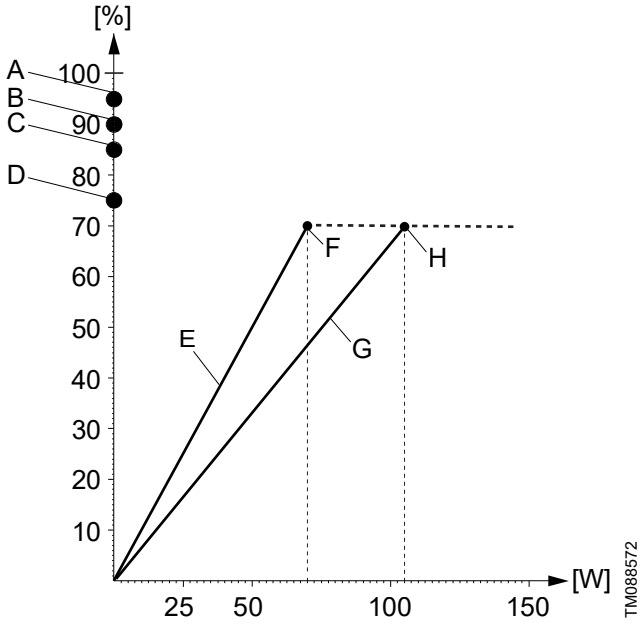

PWM feedback signal, power consumption

Pos.	Description
X-axis	Output power consumption [W]
Y-axis	Output duty cycle in percentage [%]
A	Standby (stop)
B	Alarm stop: fault, blocked pump
C	Alarm stop: electrical fault
D	Warning
E	Slope: 1 W / % PWM signal **Valid for ALPHA2 GO XX-40**
F	Saturation at 70 W
G	Slope: 1.5 W / % PWM signal **Valid for ALPHA2 GO XX-75**
H	Saturation at 105 W

PWM output duty cycle	Pump information
95 %	Standby (stop) by PWM duty cycle
90 %	Alarm, stop, blocked error
85 %	Alarm, stop, electrical error
75 %	Warning
0-70 %	Operating range

Output frequency: 75 Hz ± 5 %.

Alarms on flow estimation

Alarm output signals are available because some PWM output duty cycles are dedicated to alarm information. If a supply voltage is measured below the specified supply voltage range, the output duty cycle is set to 75 %. If the rotor is locked due to deposits in the hydraulics, the output duty cycle is set to 90 % as this alarm has a higher priority.

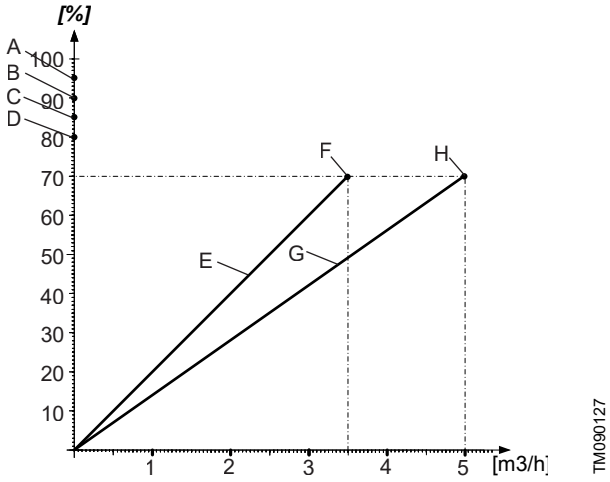

PWM feedback signal, flow estimation

Pos.	Description
X-axis	Output power consumption [m^3/h]
Y-axis	Output duty cycle in percentage [%]
A	Standby (stop)
B	Alarm stop: fault, blocked pump
C	Alarm stop: electrical fault
D	Dry running
E	Slope: 0.05 m^3/h / % PWM signal **Valid for ALPHA2 GO XX-40**
F	Saturation at 3.5 m^3/h
G	Slope: 0.07 m^3/h / % PWM signal **Valid for ALPHA2 GO XX-75**
H	Saturation at 5.0 m^3/h

PWM output duty cycle	Pump information
95 %	Standby (stop) by PWM duty cycle
90 %	Alarm, stop, blocked error
85 %	Alarm, stop, electrical error
80 %	Dry running
0-70 %	Operating range

Output frequency: 75 Hz ± 5 %.

8.7 Supported setting of an automatic bypass valve (ABV)

With the use of Grundfos GO it is possible to be guided through the setting of an automatic bypass valve (ABV). This ensures that the circulator pump is set in a control mode and with a setting which both ensures that the system is provided with the heating power needed and at the same time the valve only opens when needed, ensuring a minimum flow.

During normal operation the circulator pump operates with a predefined constant (differential) pressure setpoint defined during guided setup of the system. As the heat demand from the system decreases, the flow moves towards zero. However, when the flow reaches the minimum flow limit or the needed bypass flow (default 0.4 m^3/h), the pump increases the differential pressure to activate the bypass valve, creating the required bypass flow.

During the setting of the bypass valve, the user is guided to adjust the valve setting so that the bypass valve remains closed when the pump is operating above the minimum flow. This is achieved by reducing the differential pressure to the predefined constant-pressure setpoint defined by the system.

Go to the guided setup in Grundfos GO. During a new setup, the user will be prompted to optimize the automatic bypass valve. Grundfos GO guides the user through the process of optimizing the valve settings.

8.8 Replacement of UPM3 or UPM4 pump

ALPHA2 GO can be used to replace the majority of integrated UPM3 or UPM4 circulator pumps. This means that when replacing an existing circulator pump, the new ALPHA2 GO pump replicates the performance as well as PWM configuration of the existing circulator pump. In the Grundfos GO app (via the **GO Replace** tool) or online via *https://grundfos.to/replace*, you can check the compatibility of the pump.

During the replacement process, Grundfos GO guides you step-by-step through the setup of the new circulator pump to match the existing circulator pump. The replication process can be initiated directly from the GO Replace tool or through the guided setup when initially connecting the pump to Grundfos GO.

8.8.1 Replacing a UPM3 or UPM4 pump

To finish the configuration of a UPM3 or UPM4 pump after replacing it, follow these steps:

In order to replicate a pump controlled via a PWM signal, the ALPHA2 GO pump also requires input from the same PWM signal. Mini superseal to FCI signal cable adapter can be found in the section on accessories.

1. Open Grundfos GO.
   - The QR code on the front of the ALPHA2 GO circulator pump leads you to **GO Replace** in Grundfos GO.
   - If the app is not installed, the QR code leads you to a download site guiding you to install the app on your device.
2. Go to **GO Replace**.
   GO Replace can be found in the **Products** tab or in the **Overview** tab after it has been added to **Your tools**.
3. To identify the product being replaced, scan the nameplate or enter the 8-digit product number that can be found after “PN:” on the nameplate.
4. Select an ALPHA2 GO pump from the list to be used as replacement of the existing circulator pump.
5. Follow the instructions in Grundfos GO to match the performance and the configuration of the existing circulator pump with the new ALPHA2 GO pump.

During the replication process the ALPHA2 GO circulator pump must be connected to Grundfos GO via Bluetooth connection. Grundfos GO downloads the configuration from the cloud to set the ALPHA2 GO circulator pump to match the performance and configuration of the existing circulator pump.

Related information

9.2 Connecting the product to Grundfos GO
11.13 Code 25 (Incorrect PWM configuration)

9. Setting of the product

The operating panel can be used for the following:

- Connecting to Grundfos GO.
- Selecting proportional pressure, constant pressure or constant curve (speed).
- Selecting pump setting (I, II, III) for the three control modes available on the operating panel.

In Grundfos GO you can access all settings.

Related information

7.1 Operating panel

9.1 Enabling Bluetooth

To activate Bluetooth on the pump, do as follows:

1. Press the **Connect** button to activate and deactivate Bluetooth.

- If the blue LED is flashing, the pump is ready to connect to a device.
- If the blue LED is permanently on, the pump is connected to Grundfos GO.

9.2 Connecting the product to Grundfos GO

Before connecting the product to Grundfos GO, the Grundfos GO app must be downloaded to your smartphone or tablet. The app is free of charge and available for iOS and Android devices.

The connection can be started either from the operating panel or Grundfos GO. If you have several products installed, we recommend starting the connection from the operating panel.

1. Open Grundfos GO on your device. Make sure that Bluetooth is enabled.
   Your device must be within reach of the product to establish Bluetooth connection.
2. Go to the **Remote** menu in Grundfos GO.
3. Press the **Connect** button on the operating panel.
   The LED next to the **Connect** button flashes until your device is connected.
4. Press **CONNECT** in Grundfos GO.
   Once the connection is established, the LED is permanently on.
   Grundfos GO is now loading the data for the product.

Related information

6. Starting up the product
6.1 Venting the product
8.8.1 Replacing a UPM3 or UPM4 pump

9.3 Setting of the pump in Grundfos GO

Once the pump is connected to Grundfos GO, you can choose between **Use default settings** and **Start setup**. We recommend selecting **Start setup** which leads you to the guided setup.

By answering a few simple questions, the guided setup will help you select the optimal control mode and setpoint for the system, which reduces energy consumption and helps prevent potential noise problems.

If you select **Use default settings**, the pump uses the factory setting, constant curve, setting II.

9.4 Air detection and system venting

The product offers a **Continuous air detection and venting** feature which means the pump can detect air and push it quickly to the air removal device.

If the pump detects air, it runs a venting sequence which enables more air to escape compared to letting the pump run at maximum speed during the entire process.

During system venting, the air is pushed to the system vent.

The function can be enabled in Grundfos GO in the **Settings** menu.

During the guided setup, you are asked if you want to vent the pump and system now. This is a one time event and will not permanently enable this function..

9.5 Flow limitation

You can set a minimum and maximum flow rate in Grundfos GO.

A minimum flow limit can be set to prevent the boiler from overheating. A maximum flow limit can be set to prevent noise in the system.

9.6 Night setback

This product offers a night setback function, which can only be activated via Grundfos GO in the **Settings** menu. When automatic night setback is enabled, the pump automatically switches between normal operation and the automatic night setback curve and reduces energy consumption.

The night setback function is available in all control modes.

The pump switches to automatic night setback when a flow-pipe temperature drop of more than 10 to 15 °C within approximately two hours is registered. The temperature drop must be at least 0.1 °C/min. Changeover to normal operation takes place without a time lag when the flow-pipe temperature has increased by approximately 10 °C. You do not have to re-enable automatic night setback if the power supply has been switched off.

If there is insufficient heat in the heating system, check whether night setback has been enabled. If yes, disable the function.

1. Connect the pump to Grundfos GO.
2. Press the gear icon in the top right side of the screen.
3. Go the **Night setback** menu.
4. Enable night setback.

Do not use night setback when the pump is installed in the return pipe of the heating system.

9.7 Trend data

In the **Trend data** menu in Grundfos GO, you can see system data for the last 10 or 100 on-cycles. An on-cycle is the period from when the pump turns on until it turns off. If the pump runs continuously for more than 24 hours, one on-cycle is regisrered and a new on-cycle will start even though the pump has not yet turned off.

You can see the following data:

- **Duration of each on-cycle**
- **Flow**
- **Head**
- **Estimated media temperature**.

You can use the trend data for system optimization and fault finding.

9.8 Updating the software

Follow the steps below to update the product's software via Grundfos GO:

1. Make sure your smart device has sufficient power.
2. Make sure your smart device is connected to the internet.
   If there is no internet where the pump is installed, go to step 3 and then follow the instructions in Grundfos GO.
3. Connect your product to Grundfos GO if it is not already connected.
   The app automatically checks if the product has the latest software installed. If a newer version is available, the text **New software available** appears on the dashboard in Grundfos GO. You can also check for software updates in the **Settings** menu.
4. Follow the guide in Grundfos GO to install the software update.

9.9 Resetting user settings

The user settings can be reset in two ways:

- **Via Grundfos GO**
  1. Open Grundfos GO.
  2. Press the gear icon in the top right side of the screen.
  3. Go to the **Reset user settings** menu and press **Reset**.
- **Via the operating panel**
  1. Press and hold the **Selection** button for 5 seconds.

9.10 Factory reset

The factory reset option is only available via Grundfos GO and requires that the pump has been replicated via GO replace.

-
  1. Open Grundfos GO.
  2. Press the gear icon in the top right side of the screen.
  3. Go to the **Reset factory settings** menu and press **Factory reset**.

10. Service

WARNING
Electric shock
Death or serious personal injury

- All electrical connections must be carried out by a qualified electrician in accordance with local regulations.
- Switch off the power supply before you start any work on the product. Make sure that the power supply cannot be switched on accidentally.
- A damaged product must be repaired or replaced by Grundfos or a service workshop authorized by Grundfos.
- Connect the pump to earth.

WARNING
Pressurised system
Minor or moderate personal injury

- Before disassembling the pump, drain the system or close the isolating valves on both sides of the pump. Slowly loosen the screws and unpressurize the system. The pumped liquid may be scalding hot and under high pressure.

WARNING
Hot surface
Minor or moderate personal injury

- The pump housing may be hot due to the pumped liquid being scalding hot. Close the isolating valves on both sides of the pump and wait for the pump housing to cool down.

Wear safety shoes.

Wear protective gloves.

Wear safety glasses.

10.1 Dismantling the product

Follow the steps below to dismantle the product:

1. Switch off the power supply.
2. Close the inlet and outlet valves.
3. Pull out the power plug.
4. Loosen the unions.
5. Remove the pump from the system.

11. Fault finding

WARNING
Electric shock
Death or serious personal injury

- Switch off the power supply before you start any work on the product. Make sure that the power supply cannot be switched on accidentally.
- A damaged product must be repaired or replaced by Grundfos or a service workshop authorized by Grundfos.

WARNING
Hot surface
Minor or moderate personal injury

- The pump housing may be hot due to the pumped liquid being scalding hot. Close the isolating valves on both sides of the pump and wait for the pump housing to cool down.

CAUTION
Pressurised system
Minor or moderate personal injury

- Before disassembling the pump, drain the system or close the isolating valves on both sides of the pump. The pumped liquid may be scalding hot and under high pressure.

11.1 Alarm and warning code logs

Grundfos GO saves up to 20 alarms and warnings in total in the **Alarms and warnings** menu.

11.2 Faults indicated on the pump

Faults preventing the pump from operating properly are indicated on the operating panel with the warning and alarm symbol turning either yellow or red.

A warning is indicated when the warning and alarm symbol is turning yellow. The pump is still running, but it does not perform as expected, and action is required in case of insufficient heating or discomfort. The operating panel alternates between showing either the error code or the control mode and setpoint.

An alarm is indicated when the warning and alarm symbol is turning red and the pump stops. In case of an alarm, all modes, speed and unit LEDs are switched off. Action is required.

It is still possible to connect to the pump in order to get a detailed error description from Grundfos GO.

If an alarm or warning is present, an error code will be displayed in the unit LED display.

LED	Description
	Warning indication
	Alarm indication

11.2.1 Overview of alarm and warning codes

Fault table

Symbol	Code on operating panel	Code in Grundfos GO	Fault
	E1	51	Blocked motor
	E2	40	Undervoltage
	E3	4	Overvoltage
		72	Internal fault
		76	Internal fault
		85	Internal fault
		132	GSC file corrupted or missing
	E4	57	Dry running
	E3	43	Forced pumping
	E9	25	Incorrect PWM configuration
		35	Air in media [1)]

1) This error is not shown on the operating panel. It is logged and can only be seen in Grundfos GO.

11.3 Resetting alarms and warnings manually with Grundfos GO

1. Go to **Alarms and warnings**.
2. Press **Reset alarm**.
   All current alarms and warnings have been reset. However, if the fault causing the alarm or warning has not been removed, the alarm or warning will appear again.
3. If you want to delete all alarms and warnings from the history log, press **Show log** > **Reset alarm and warning logs**.

11.4 Noise in the system

Cause	Remedy
The flow is too high.	• Lower the flow.
There is air in the system.	1. Connect the pump to Grundfos GO. 2. Select the **Settings** menu. 3. Select **Vent pump (15 minutes)**. 4. Press **Start venting**.

11.5 Code 57 (Dry running)

The warning and alarm symbol flashes red, the display shows error code **E4** and the pump stops.

Cause	Remedy
Water is missing in the system or the system pressure is too low.	• Fill the system with the correct amount of liquid. • Prime and vent the pump before a new startup.

11.6 Code 51 (Blocked pump)

The warning and alarm symbol flashes red, the display shows error code **E1** and the pump stops.

Cause	Remedy
The pump is blocked.	Only a qualified specialist must perform such work. 1. Isolate the pump. 2. Remove the pump head. 3. Remove the deposits.

11.7 Code 40 (Undervoltage)

The warning and alarm symbol flashes red, the display shows error code **E2** and the pump stops.

Cause	Remedy
The supply voltage to the pump is too low.	• Make sure that the power supply is within the specified range.

11.8 Code 4 (Overvoltage)

The warning and alarm symbol flashes red, the display shows error code **E3** and the pump stops.

Cause	Remedy
The supply voltage to the pump is too high.	• Make sure that the power supply is within the specified range.

11.9 Code 72 (Internal fault)

The warning and alarm symbol flashes red, the display shows error code **E3** and the pump stops.

Cause	Remedy
Internal fault.	• Replace the pump or contact Grundfos.

11.10 Code 76 (Internal fault)

The warning and alarm symbol flashes red, the display shows error code **E3** and the pump stops.

Cause	Remedy
Internal fault.	• Replace the pump or contact Grundfos.

11.11 Code 85 (Internal fault)

The warning and alarm symbol flashes red, the display shows error code **E3** and the pump stops.

Cause	Remedy
Internal fault.	• Replace the pump or contact Grundfos.

11.12 Code 132 (Pump configuration corrupted or missing)

The warning and alarm symbol flashes red, the display shows error code **E3** and the pump stops.

Cause	Remedy
The configuration file has been corrupted or is missing.	• Reconnect with Grundfos GO and repeat the configuration.

11.13 Code 25 (Incorrect PWM configuration)

The warning and alarm symbol flashes yellow, and the pump continues to run.

Cause	Remedy
The pump is receiving a signal via the PWM input, but the PWM configuration is missing or not finished.	• Ensure the pump is set to externally controlled (PWM mode). • Finalise the PWM configuration via the **Settings** menu. If the pump is to be used as a replacement pump, replicate the configuration of the pump to be replaced via the **GO Replace** tool.

Related information

8.8.1 Replacing a UPM3 or UPM4 pump

11.14 Code 43 (Forced pumping)

The warning and alarm symbol is permanently yellow, the display shows error code **E3** and the pump is running.

Cause	Remedy
Other pumps or sources create a flow through the pump.	• Check the system for correct position of the non-return valves. • Check the system for defective non-return valves, and replace the valves if necessary.

11.15 Code 35 (Air in media)

This is not shown on the operating panel. It is logged and can be seen in Grundfos GO.

Cause	Remedy
There is air in the pump and/or system.	• Vent the pump and system. • If the problem persists, investigate the system for leakages.

12. Technical data

Supply voltage	1 × 220-240 V, ± 6%, 50/60 Hz
Minimum supply voltage	160 VAC (runs with reduced performance)
Motor protection	The pump requires no external motor protection.
Enclosure class	Indoor use only IP44 IPX4D (only ALPHA2 K XX-75)
Temperature class	TF110 to EN 60335-2-51
Reaction time - power on	No specific requirements.
Reaction time - standby	< 1 s
Reaction time - speed change	< 1 s
Inrush current	< 4 A
Standby power consumption [2) 3)]	< 0.7 W
Insulation class	F
Relative humidity	Max. 95 %
Max. outlet pressure	1.0 MPa (10 bar)
Surge robustness	> 3 W (DWCM)
Radio frequency radiation exposure	-6 dB CE/EN55014-1, CE/EN55014-2
Sound pressure level (LP)	< 25 dB(A)
Pump housing	Electrocoated cast iron
Connection type	G 1 1/2,

3) Applicable for pumps that are stopped and connected to the power supply. Only applicable for variants with the PWM functionality.

Product size

	Max. flow rate (Q) [m^3/h]	Max. head (H) [m]
XX-40	2.7	4.0
XX-75	4.5	7.5

Power usage (approximate)

	Min.	Max.
XX-40	3 W	21 W
XX-75	3 W	75 W

Liquid temperature

	Max. ambient temperature 55 °C	**Max. ambient temperature 70 °C**
XX-40	2 to 110 °C	2 to 75 °C
XX-75	-10 to +110 °C	-10 to +75 °C
K XX-75	-20 to +110 °C	-20 to +75 °C

Inlet pressure

Liquid temperature [°C]	**Min. inlet pressure [bar]**
75	0.05
95	0.5
110	1.08

Related information

2.5.1 Nameplate

13. Disposing of the product

This product or parts of it must be disposed of in an environmentally sound way.

1. Use the public or private waste collection service.
2. If this is not possible, contact the nearest Grundfos company or service workshop.
3. Dispose of the waste battery through the national collective schemes. If in doubt, contact your local Grundfos company.

The crossed-out wheelie bin symbol on a product means that it must be disposed of separately from household waste. When a product marked with this symbol reaches its end of life, take it to a collection point designated by the local waste disposal authorities. The separate collection and recycling of such products will help protect the environment and human health.

See also end-of-life information at *www.grundfos.com/product-recycling*.

14. Document quality feedback

To provide feedback about this document, use your smart device to scan the QR code.

Click here to submit your feedback

Argentina
Bombas GRUNDFOS de Argentina S.A.
Ruta Panamericana km. 37.500industin
1619 - Garín Pcia. de B.A.
Tel.: +54-3327 414 444
Fax: +54-3327 45 3190

Australia
GRUNDFOS Pumps Pty. Ltd.
P.O. Box 2040
Regency Park
South Australia 5942
Tel.: +61-8-8461-4611
Fax: +61-8-8340-0155

Austria
GRUNDFOS Pumpen Vertrieb Ges.m.b.H.
Grundfosstraße 2
A-5082 Grödig/Salzburg
Tel.: +43-6246-883-0
Fax: +43-6246-883-30

Belgium
N.V. GRUNDFOS Bellux S.A.
Boomsesteenweg 81-83
B-2630 Aartselaar
Tel.: +32-3-870 7300
Fax: +32-3-870 7301

Bosnia and Herzegovina
GRUNDFOS Sarajevo
Zmaja od Bosne 7-7A
BiH-71000 Sarajevo
Tel.: +387 33 592 480
Fax: +387 33 590 465
www.ba.grundfos.com
E-mail: grundfos@bih.net.ba

Brazil
BOMBAS GRUNDFOS DO BRASIL
Av. Humberto de Alencar Castelo Branco, 630
CEP 09850 - 300
São Bernardo do Campo - SP
Tel.: +55-11 4393 5533
Fax: +55-11 4343 5015

Bulgaria
Grundfos Bulgaria EOOD
Slatina District
Iztochna Tangenta street no. 100
BG - 1592 Sofia
Tel.: +359 2 49 22 200
Fax: +359 2 49 22 201
E-mail: bulgaria@grundfos.bg

Canada
GRUNDFOS Canada inc.
2941 Brighton Road
Oakville, Ontario
L6H 6C9
Tel.: +1-905 829 9533
Fax: +1-905 829 9512

China
GRUNDFOS Pumps (Shanghai) Co. Ltd.
10F The Hub, No. 33 Suhong Road
Minhang District
Shanghai 201106 PRC
Tel.: +86 21 612 252 22
Fax: +86 21 612 253 33

Colombia
GRUNDFOS Colombia S.A.S.
Km 1.5 vía Siberia-Cota Conj. Potrero Chico,
Parque Empresarial Arcos de Cota Bod. 1A.
Cota, Cundinamarca
Tel.: +57(1)-2913444
Fax: +57(1)-8764586

Croatia
GRUNDFOS CROATIA d.o.o.
Buzinski prilaz 38, Buzin
HR-10010 Zagreb
Tel.: +385 1 6595 400
Fax: +385 1 6595 499
www.hr.grundfos.com

Czech Republic
GRUNDFOS Sales Czechia and Slovakia s.r.o.
Čajkovského 21
779 00 Olomouc
Tel.: +420-585-716 111

Denmark
GRUNDFOS DK A/S
Martin Bachs Vej 3
DK-8850 Bjerringbro
Tel.: +45-87 50 50 50
Fax: +45-87 50 51 51
E-mail: info_GDK@grundfos.com
www.grundfos.com/DK

Estonia
GRUNDFOS Pumps Eesti OÜ
Peterburi tee 92G
11415 Tallinn
Tel.: + 372 606 1690
Fax: + 372 606 1691

Finland
OY GRUNDFOS Pumput AB
Trukkikuja 1
FI-01360 Vantaa
Tel.: +358-(0) 207 889 500

France
Pompes GRUNDFOS Distribution S.A.
Parc d'Activités de Chesnes
57, rue de Malacombe
F-38290 St. Quentin Fallavier (Lyon)
Tel.: +33-4 74 82 15 15
Fax: +33-4 74 94 10 51

Germany
GRUNDFOS GMBH
Schlüterstr. 33
40699 Erkrath
Tel.: +49-(0) 211 929 69-0
Fax: +49-(0) 211 929 69-3799
E-mail: infoservice@grundfos.de
Service in Deutschland:
kundendienst@grundfos.de

Greece
GRUNDFOS Hellas A.E.B.E.
20th km. Athinon-Markopoulou Av.
P.O. Box 71
GR-19002 Peania
Tel.: +0030-210-66 83 400
Fax: +0030-210-66 46 273

Hong Kong
GRUNDFOS Pumps (Hong Kong) Ltd.
Unit 1, Ground floor, Siu Wai industrial Centre
29-33 Wing Hong Street & 68 King Lam Street, Cheung Sha Wan
Kowloon
Tel.: +852-27861706 / 27861741
Fax: +852-27858664

Hungary
GRUNDFOS South East Europe Kft.
Tópark u. 8
H-2045 Törökbálint
Tel.: +36-23 511 110
Fax: +36-23 511 111

India
GRUNDFOS Pumps India Private Limited
118 Old Mahabalipuram Road
Thoraipakkam
Chennai 600 097
Tel.: +91-44 2496 6800

Indonesia
PT GRUNDFOS Pompa
Graha intirub Lt. 2 & 3
Jln. Cililitan Besar No.454. Makasar, Jakarta Timur
ID-Jakarta 13650
Tel.: +62 21-469-51900
Fax: +62 21-460 6910 / 460 6901

Ireland
GRUNDFOS (Ireland) Ltd.
Unit A, Merrywell Business Park
Ballymount Road Lower
Dublin 12
Tel.: +353-1-4089 800
Fax: +353-1-4089 830

Italy
GRUNDFOS Pompe Italia S.r.l.
Via Gran Sasso 4
I-20060 Truccazzano (Milano)
Tel.: +39-02-95838112
Fax: +39-02-95309290 / 95838461

Japan
GRUNDFOS Pumps K.K.
1-2-3, Shin-Miyakoda, Kita-ku
Hamamatsu
431-2103 Japan
Tel.: +81 53 428 4760
Fax: +81 53 428 5005

Kazakhstan
Grundfos Kazakhstan LLP
7' Kyz-Zhibek Str., Kok-Tobe micr.
KZ-050020 Almaty Kazakhstan
Tel.: +7 (727) 227-98-55/56

Korea
GRUNDFOS Pumps Korea Ltd.
6th Floor, Aju Building 679-5
Yeoksam-dong, Kangnam-ku, 135-916
Seoul, Korea
Tel.: +82-2-5317 600
Fax: +82-2-5633 725

Latvia
SIA GRUNDFOS Pumps Latvia
Deglava biznesa centrs
Augusta Deglava ielā 60
LV-1035, Rīga,
Tel.: + 371 714 9640, 7 149 641
Fax: + 371 914 9646

Lithuania
GRUNDFOS Pumps UAB
Smolensko g. 6
LT-03201 Vilnius
Tel.: + 370 52 395 430
Fax: + 370 52 395 431

Malaysia
GRUNDFOS Pumps Sdn. Bhd.
7 Jalan Peguam U1/25
Glenmarie industrial Park
40150 Shah Alam, Selangor
Tel.: +60-3-5569 2922
Fax: +60-3-5569 2866

Mexico
Bombas GRUNDFOS de México S.A. de C.V.
Boulevard TLC No. 15
Parque industrial Stiva Aeropuerto
Apodaca, N.L. 66600
Tel.: +52-81-8144 4000
Fax: +52-81-8144 4010

Netherlands
GRUNDFOS Netherlands
Veluwezoom 35
1326 AE Almere
Postbus 22015
1302 CA ALMERE
Tel.: +31-88-478 6336
Fax: +31-88-478 6332
E-mail: info_gnl@grundfos.com

New Zealand
GRUNDFOS Pumps NZ Ltd.
17 Beatrice Tinsley Crescent
North Harbour Industrial Estate
Albany, Auckland
Tel.: +64-9-415 3240
Fax: +64-9-415 3250

Norway
GRUNDFOS Pumper A/S
Strømsveien 344
Postboks 235, Leirdal
N-1011 Oslo
Tel.: +47-22 90 47 00
Fax: +47-22 32 21 50

Poland
GRUNDFOS Pompy Sp. z o.o.
ul. Klonowa 23
Baranowo k. Poznania
PL-62-081 Przeźmierowo
Tel.: (+48-61) 650 13 00
Fax: (+48-61) 650 13 50

Portugal
Bombas GRUNDFOS Portugal, S.A.
Rua Calvet de Magalhães, 241
Apartado 1079
P-2770-153 Paço de Arcos
Tel.: +351-21-440 76 00
Fax: +351-21-440 76 90

Romania
GRUNDFOS Pompe România SRL
S-PARK BUSINESS CENTER, Clădirea A2, etaj 2
Str. Tipografilor, Nr. 11-15, Sector 1, Cod 013714
Bucuresti, Romania
Tel.: 004 021 2004 100
E-mail: romania@grundfos.ro

Serbia
Grundfos Srbija d.o.o.
Omladinskih brigada 90b
11070 Novi Beograd
Tel.: +381 11 2258 740
Fax: +381 11 2281 769
www.rs.grundfos.com

Singapore
GRUNDFOS (Singapore) Pte. Ltd.
25 Jalan Tukang
Singapore 619264
Tel.: +65-6681 9688
Faxax: +65-6681 9689

Slovakia
GRUNDFOS s.r.o.
Prievozská 4D 821 09 BRATISLAVA
Tel.: +421 2 5020 1426
sk.grundfos.com

Slovenia
GRUNDFOS LJUBLJANA, d.o.o.
Leskoškova 9e, 1122 Ljubljana
Tel.: +386 (0) 1 568 06 10
Fax: +386 (0)1 568 06 19
E-mail: tehnika-si@grundfos.com

South Africa
GRUNDFOS (PTY) LTD
16 Lascelles Drive, Meadowbrook Estate
1609 Germiston, Johannesburg
Tel.: (+27) 10 248 6000
Fax: (+27) 10 248 6002
E-mail: lgradidge@grundfos.com

Spain
Bombas GRUNDFOS España S.A.
Camino de la Fuentecilla, s/n
E-28110 Algete (Madrid)
Tel.: +34-91-848 8800
Fax: +34-91-628 0465

Sweden
GRUNDFOS AB
Box 333 (Lunnagårdsgatan 6)
431 24 Mölndal
Tel.: +46 31 332 23 000
Fax: +46 31 331 94 60

Switzerland
GRUNDFOS Pumpen AG
Bruggacherstrasse 10
CH-8117 Fällanden/ZH
Tel.: +41-44-806 8111
Fax: +41-44-806 8115

Taiwan
GRUNDFOS Pumps (Taiwan) Ltd.
7 Floor, 219 Min-Chuan Road
Taichung, Taiwan, R.O.C.
Tel.: +886-4-2305 0868
Fax: +886-4-2305 0878

Thailand
GRUNDFOS (Thailand) Ltd.
92 Chaloem Phrakiat Rama 9 Road
Dokmai, Pravej, Bangkok 10250
Tel.: +66-2-725 8999
Fax: +66-2-725 8998

Turkey
GRUNDFOS POMPA San. ve Tic. Ltd. Sti.
Gebze Organize Sanayi Bölgesi
Ihsan dede Caddesi
2. yol 200. Sokak No. 204
41490 Gebze/ Kocaeli
Tel.: +90 - 262-679 7979
Fax: +90 - 262-679 7905
E-mail: satis@grundfos.com

Ukraine
ТОВ "ГРУНДФОС УКРАЇНА"
Бізнес Центр Європа
Столичне шосе, 103
м. Київ, 03131, Україна
Tel.: (+38 044) 237 04 00
Fax: (+38 044) 237 04 01
E-mail: ukraine@grundfos.com

United Arab Emirates
GRUNDFOS Gulf Distribution
P.O. Box 16768
Jebel Ali Free Zone, Dubai
Tel.: +971 4 8815 166
Fax: +971 4 8815 136

United Kingdom
GRUNDFOS Pumps Ltd.
Grovebury Road
Leighton Buzzard/Beds. LU7 4TL
Tel.: +44-1525-850000
Fax: +44-1525-850011

U.S.A.
Global Headquarters for WU
856 Koomey Road
Brookshire, Texas 77423 USA
Phone: +1-630-236-5500

Uzbekistan
Grundfos Tashkent, Uzbekistan
The Representative Office of Grundfos Kazakhstan in Uzbekistan
38a, Oybek street, Tashkent
Tel.: (+998) 71 150 3290 / 71 150 3291
Fax: (+998) 71 150 3292

© 2025 Grundfos Holding A/S, all rights reserved.

Trademarks displayed in this material, including but not limited to Grundfos and the Grundfos logo, are registered trademarks owned by The Grundfos Group.

93215914 **09.2025**

ECM: 1434680