Jet pumps & boosters

Service Kit Catalogue

GRUNDFOS

Table of contents

1. Jet pumps & boosters 3
JP pumps 3
JP Boosters 5
JP 5, JP 6 7
JP 5, JP 6 10
JP 5, JP 6 Booster 13
JPC, JPC PM 16
JPBasic, JPBasic Boosters, JPA, JPA PT, JPA PM 18
JDBasic, JDBasic Boosters, JPD, JPD PT 22
JP PS USA (new models) 24
Jet booster USA (previous models) 26

1. Jet pumps & boosters

JP pumps

Kit, handle

Pos.	Pump type	JP3-42 / JP4-47 / JP4-54 / JP5-48
	Kit No.	99521000
190	Handle	1
190b	Screws	2

Kit, hydraulic 50 Hz

Pos.	Pump type	JP3-42	JP4-47	JP4-54	JP5-48
	Kit No.	98715214	98715216	98715217	99520961
19	Impeller	1	1	1	1
20	Diffuser	1	1	1	1
21	Venturi tube	1	1	1	1
28	O-ring	1	1	1	1
21a	O-ring	1	1	1	1
13	O-ring	1	1	1	

Kit, hydraulic 60 Hz

Pos.	Pump type	JP3-42	JP4-47	JP4-54	JP5-48
	Kit No.	98715218	98715219	98715220	99520960
19	Impeller	1	1	1	1
20	Diffuser	1	1	1	1
21	Venturi tube	1	1	1	1
28	O-ring	1	1	1	1
21a	O-ring	1	1	1	1
13	O-ring	1	1	1	1

Kit, motor shell

Pos.	Pump type	JP3-42 / JP4-47	JP4-54 / JP5-48
	Kit No.	99521002	99521025
44	Upper motor shell	1	1
42	Lower motor shell	1	1
43	Shell grid	1	1
45	Screws	6	6

Kit, pump housing

Pos.	Pump type	JP3-42 / JP4-47 / JP4-54 / JP5-48	JP3-42 / JP4-47 / JP4-54 / JP5-48
	Model	G1" thread	NPT thread
	Kit No.	99521027	99521028
1	Pump housing	1	1
28	O-ring	1	1
92	Clamp ring	1	1
93	Screw	1	1
94	Nut	1	1

Kit, plugs

Pos.	Pump type	JP3-42 / JP4-47 / JP4-54 / JP5-48
	Kit No.	99521030
31	Plug	2
32	O-ring	2

Kit, shaft seal

Pos.	Pump type	JP3-42 / JP4-47 / JP4-54 / JP5-48
	Kit No.	99520998
16/16a	Shaft seal	1

Spare, motor fan

Pos.	Pump type	JP3-42 / JP4-47	JP4-54 / JP5-48
	Kit No.	99577662	99577666
14	Motor fan	1	1

Exploded view for JP 3-42 / JP 4-47 / JP 4-54 / JP 5-48

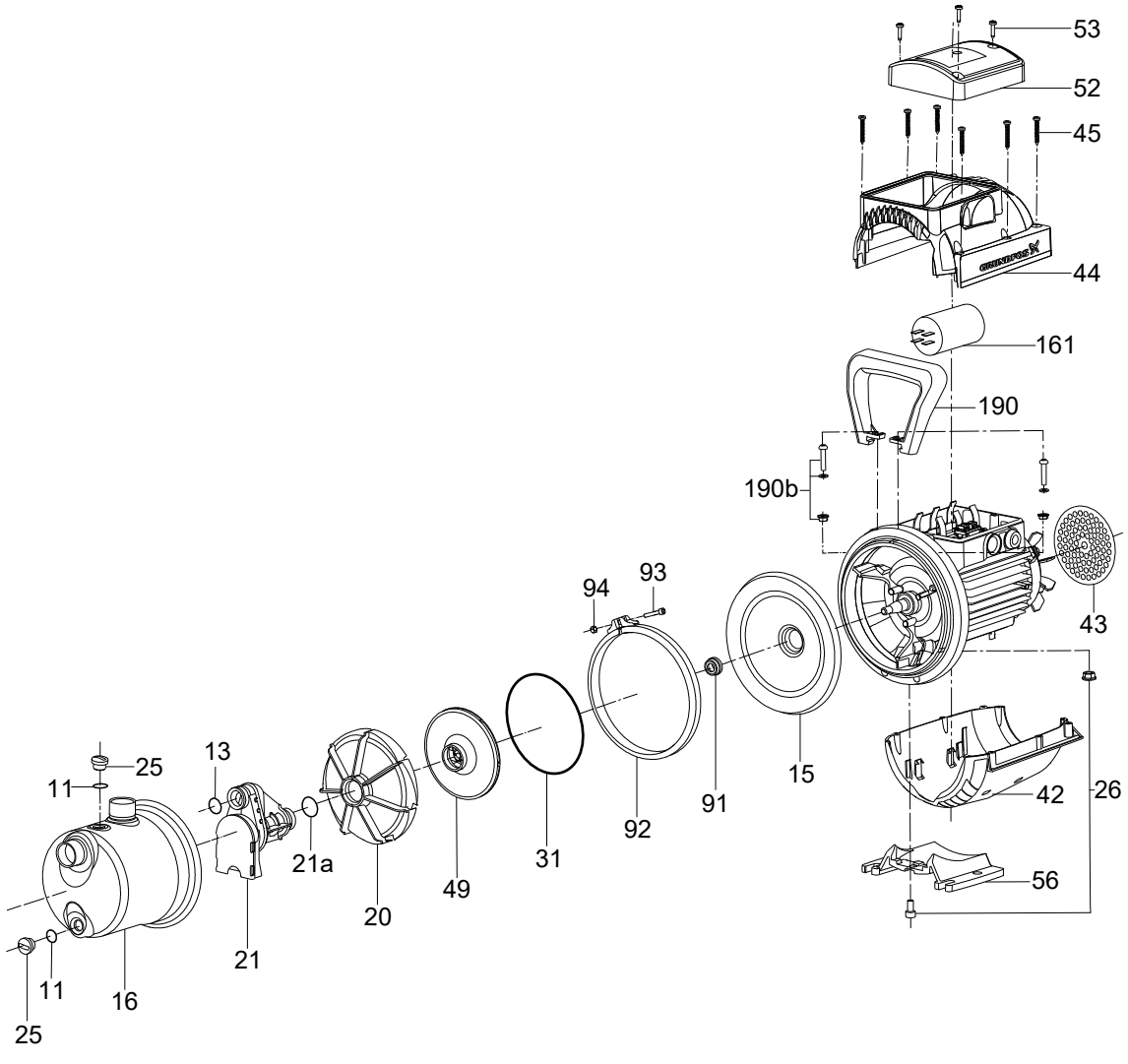

JP Boosters

Spare parts

Capacitor 50 Hz

Pos.	Pump type	JP3-42, JP4-47	JP4-54	JP5-48
	Kit No.	***99521046***	***99521052***	***99521065***
23	Capacitor 12.5µF	1	-	-
	Capacitor 16µF	-	1	-
	Capacitor 25µF	-	-	1

Capacitor 60 Hz

Pos.	Pump type	JP3-42	JP4-47, JP4-54	JP5-48
	Kit No.	***99521063***	***99521046***	***99521065***
23	Capacitor 10µF	1	-	-
	Capacitor 12.5µF	-	1	-
	Capacitor 25µF	-	-	1

5-way valve

Pos.	Pump type	JP3-42 / JP4-47 / JP4-54 / JP5-48
404	5 way valve	*99521067*

Manometer

Pos.	Pump type	JP3-42 / JP4-47 / JP4-54 / JP5-48
462	Manometer	*99521114*

Tank, horizontal

Pos.	Pump type	JP3-42 / JP4-47 / JP4-54 / JP5-48
306	Tank, horizontal	*99521115*

Tank, vertical

Pos.	Pump type	JP3-42 / JP4-47 / JP4-54 / JP5-48
305	Tank, vertical	*99521116*

Hose

Pos.	Pump type	JP3-42 / JP4-47 / JP4-54 / JP5-48
309	Hose	*99521117*

Pressure switch

Pos.	Pump type	JP3-42 / JP4-47 / JP4-54 / JP5-48
407	Pressure switch	*99521118*

Pressure manager

See the section on pressure manager for PM parts.

Exploded views for JP 3-42 / JP 4-47 / JP 4-54 / JP 5-48

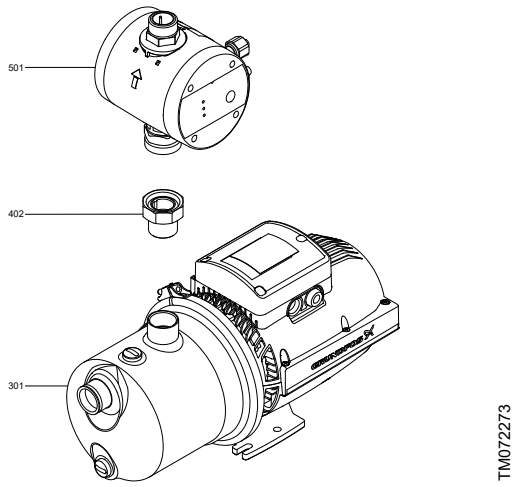

JP PM

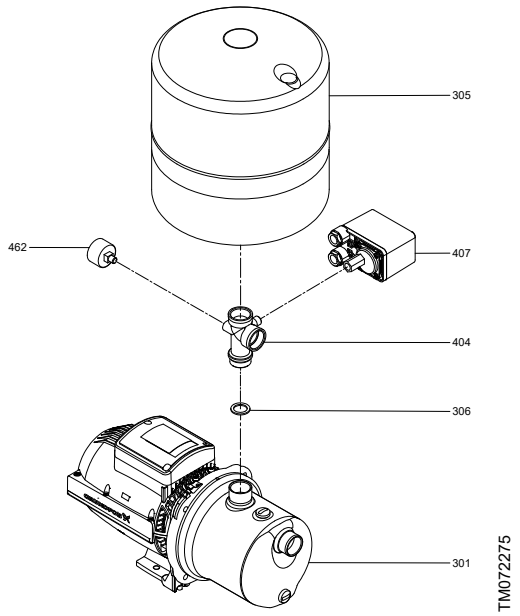

JP PT-V

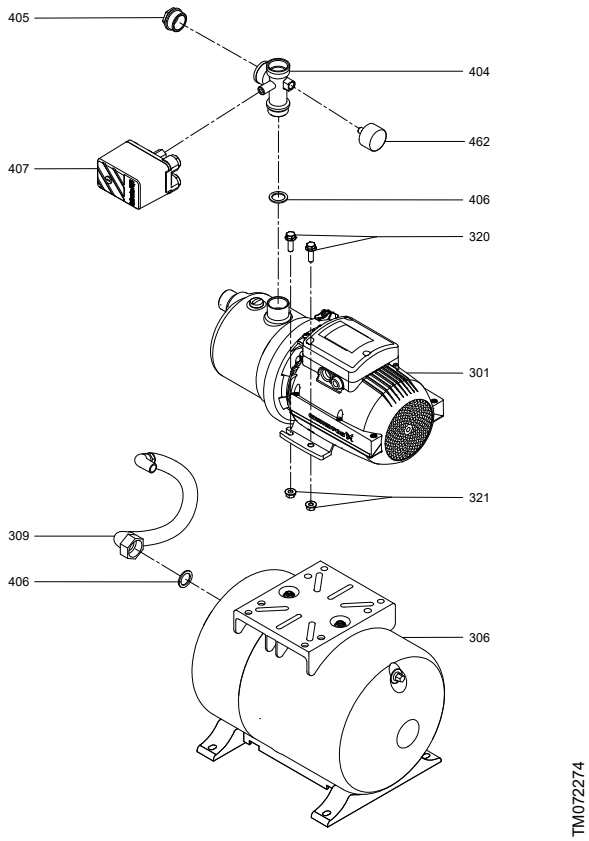

JP PT-H

JP 5, JP 6

50/60 Hz, Models B, C, D, E

Kit, clamp

Pos.	Pump type	JP5	JP6
	Model	B, D, E	
	Kit No.	*96957810*	
92	Clamp	1	
93	Hexagon socket head cap screw	1	
94	Lock nut M6	1	

Kit, hydraulic parts

Pos.	Pump type	JP5	JP6
	Model	B, D, E	
	Kit No.	*96768184*	*96768185*
13	O-ring	1	1
14	Ejector complete	1	1
49	Impeller	1	1
66	Washer	1	1
67	Lock nut M8	1	1
91	Seal ring	1	1

Kit, O-ring

Pos.	Pump type	JP5, JP6
	Model	B, D, E
	Kit No.	*96768180*
11	O-ring	2
13	O-ring	1
25	Plug	2
31	O-ring	1

Kit, shaft seal model D

Pos.	Pump type	JP5, JP6	JP5, JP6
	Model	D	D
	Material	A	B
	Kit No.	*96768182*	*98963491*
62	Gasket	1	1
105	Shaft seal, material A	1	-
105	Shaft seal, material B	-	1
91	Seal ring, JP5	1	1
31	O-ring	1	1

Kit, shaft seal and impeller model C

Pos.	Pump type	JP5	JP6
	Model	C	C
	Kit No.	*985742*	*985743*
11	O-ring	2	2
13	O-ring	1	1
25	Pipe plug	1	1
25A	Ejector valve	1	1
31	O-ring	1	1
49	Impeller	1	1
62	O-ring	1	1
105	Shaft seal	1	1
91	Seal ring	1	1
93	Hexagon socket head cap screw	1	1
94	Lock nut	1	1

Exploded views for JP 5, JP 6

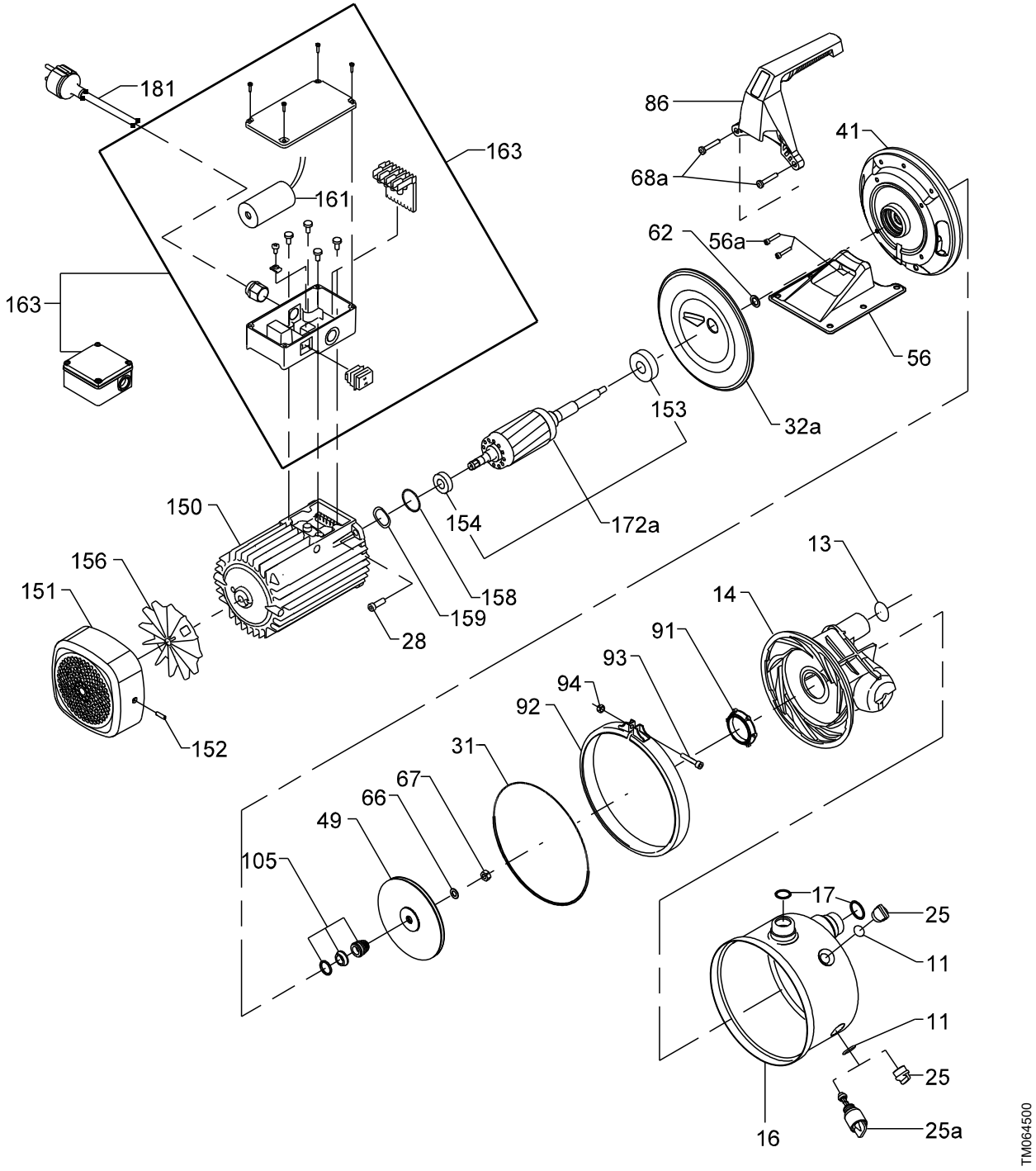

Material A

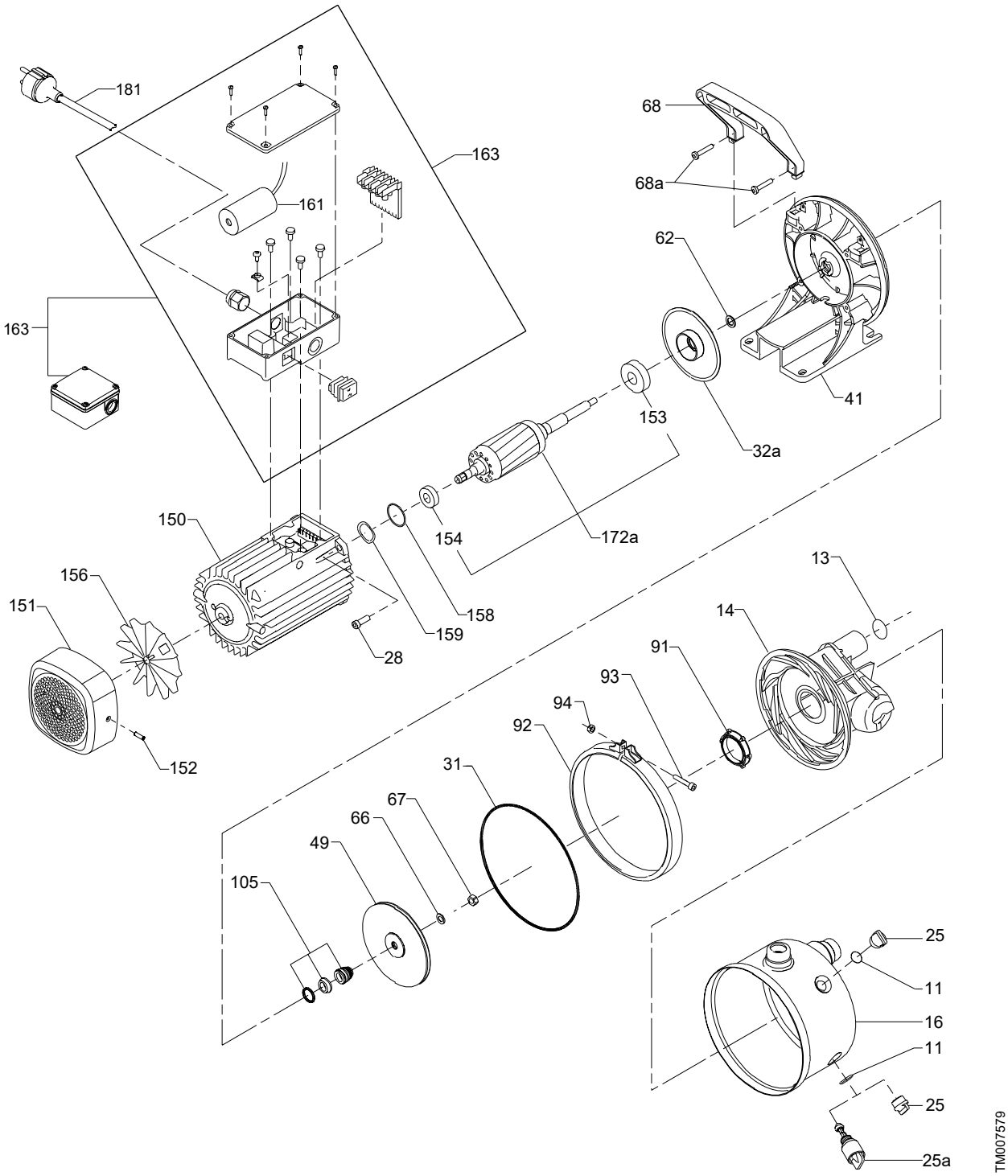
181
163
161
163
68
68a
62
41
153
32a
150
154
172a
156
151
158
159
28
13
14
91
93
94
92
152
31
67
66
49
105
25
11
16
11
25
25a
TM007579

Material B

JP 5, JP 6

50/60 Hz, Models B, C, D, E
Spare parts and bulk parts

Spare, base plate

Pos.	Pump type	JP5, JP6
	Model	B, D, E
	Material	B
	Kit No.	96588638
56	Base plate stainless complete	1

Spare, capacitor

Pos.	Pump type	JP5	JP6
	Model	B, D, E	B, D, E
	Kit No.	98933219	98933241
161	Capacitor 20µF	1	-
	Capacitor 25µF	-	1
	Capacitor 8µF	-	-

Spare, cover plate

Pos.	Pump type	JP5	JP6
	Model	B, D, E	
	Kit No.	97688246	
32a	Cover plate	1	

Spare, ejector valve

Pos.	Pump type	JP5	JP6
	Model	B, D, E	B, D, E
	Kit No.	96588659	96588678
25a	Ejector valve	1	1

Spare, handle

Pos.	Pump type	JP5	JP6
	Model	B, D, E	B, D, E
	Material	A	B
	Kit No.	97688244	96588661
68	Handle	1	1

Spare, motor stool

Pos.	Pump type	JP5	JP6	JP5	JP6
	Model	B, D, E		B, D, E	
	Kit No.	97688243		97688242	
41	Motor stool composite	1		-	
41	Motor stool aluminium	-		1	

Spare, pump sleeve

Pos.	Pump type	JP5	JP6	JP5	JP6
	Model	B, D, E		B, D, E	
	Kit No.	97688245		98686526	
16	Pump sleeve int. thread	1		-	
16	Pump sleeve ext. thread	-		1	

Spare, terminal box with on/off switch

Pos.	Pump type	JP5	JP6
	Model	B, D, E	
	Kit No.	96588646	96588647
163	Terminal box complete	1	1

Spare, terminal box without on/off switch

Pos.	Pump type	JP5	JP6
	Model	B, D, E	
	Kit No.	98996857	98996888
163	Terminal box complete	1	1

Spare, terminal box 3 phase

Pos.	Pump type	JP5, JP6
	Model	B, D, E
	Kit No.	98996890
163	Terminal box complete, 3 phase	1

Bulk, ejector

Pos.	Pump type	JP5	JP6
	Model	B, D, E	B, D, E
	Material	A	B
	Kit No.	97704920	97705042
68	Ejector complete	5	5

Bulk, gasket

Pos.	Pump type	JP5	JP6
	Model	B, D, E	
	Kit No.	96603455	
15	Gasket	10	

Bulk, O-ring

Pos.	Pump type	JP5, JP6
	Model	B, D, E
	Kit No.	96549277
31	O-ring	20

Bulk, pipe plug

Pos.	Pump type	JP5	JP6
	Model	B, D, E	
	Kit No.	98470814	
25	Pipe plug	20	

Bulk, seal ring

Pos.	Pump type	JP5	JP6
	Model	B, D, E	B, D, E
	Kit No.	96803029	96928591
91	Seal ring	10	10

Bulk, shaft seal

Pos.	Pump type	JP5	JP6
	Model	B, D, E	
	Kit No	96536505	
105	Shaft seal	10	

Exploded views for JP 5, JP 6

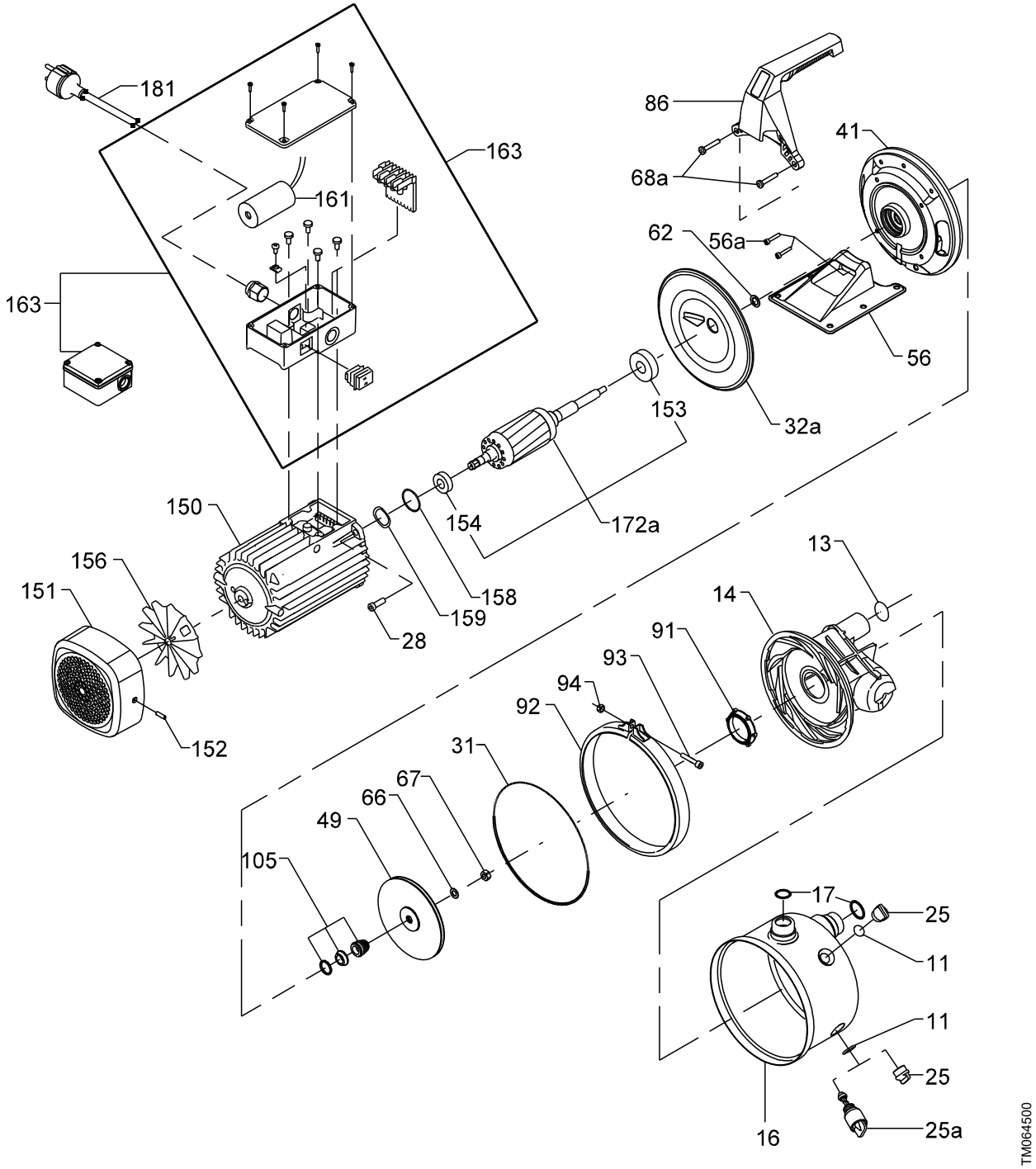

Material A

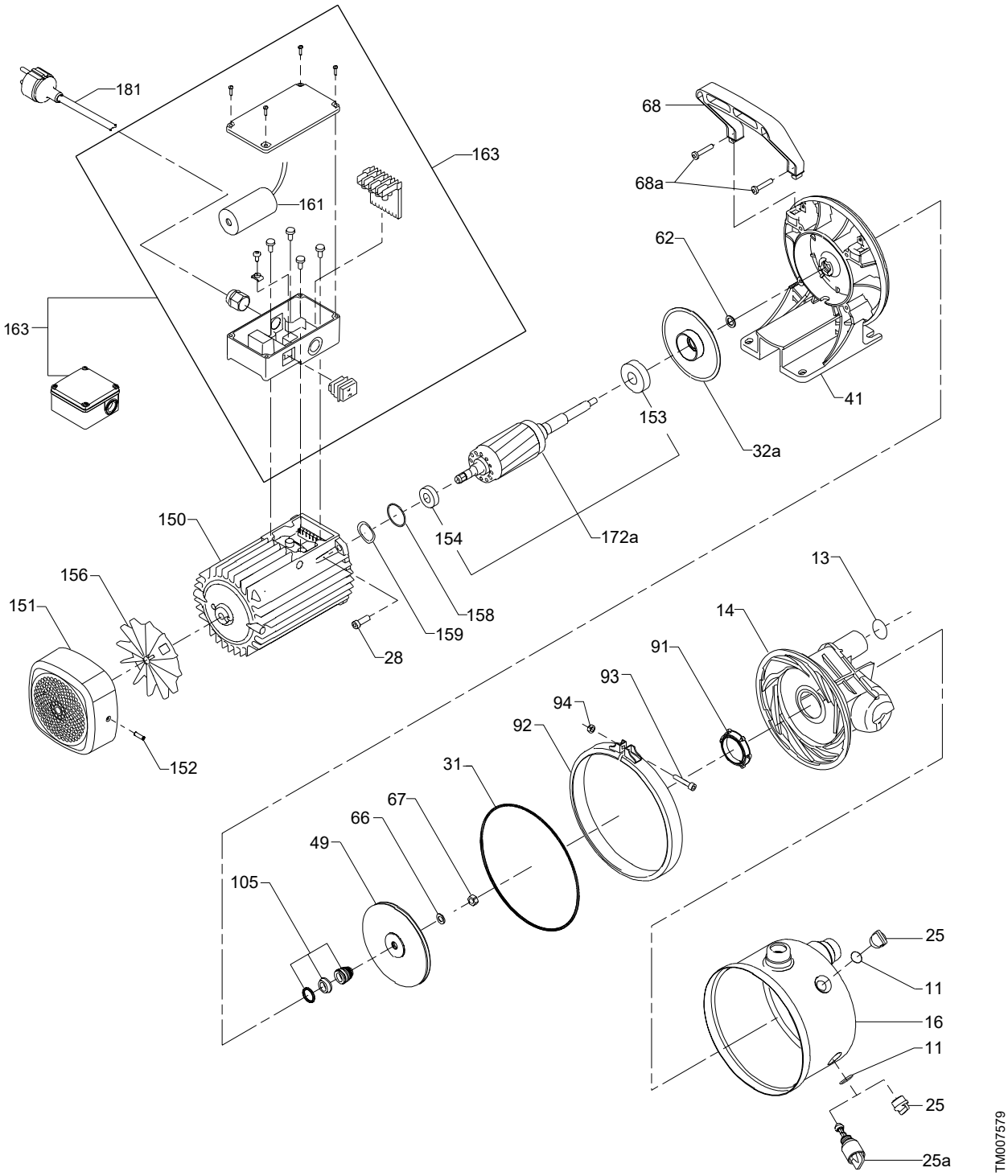
181
163
161
163
68
68a
62
41
153
32a
150
154
172a
156
151
158
159
28
13
14
91
93
94
92
152
31
67
66
49
105
25
11
16
11
25
25a
TM007579

Material B

JP 5, JP 6 Booster

Models with pressure tank, 50/60 Hz

Kit, 5-way fitting and gasket

Pos.	Pump type	JP5, JP6
	Model	B, D, E
	Kit No.	*98777519*
404	Fitting 5 way with union complete	1
406	Gasket	1

Kit, manometer

Pos.	Pump type	JP5, JP6
	Model	B, D, E
	Kit No.	*98906913*
462	Manometer	1

Kit, tank assembly

Pos.	Pump type	JP5, JP6
	Model	B, D, E
	Kit No.	*98777517*
307	Vibration absorber	2
406	Gasket	1
320	Hex cap screw	4
321	Lock washer	4

Kit, pressure tank

Pos.	Kit No.	*98906910*	*98906911*	*96553382*
	Model	JP PT	JP PT	JP PT
305	24 liter GT-H tank	1	-	-
305	60 liter GT-H tank	-	1	-
305	18 liter GT-H tank	-	-	1
406	Gasket	2	2	2

Kit, tube and gasket

Pos.	Pump type	JP5, JP6
	Model	B, D, E
	Kit No.	*98777515*
309	Rubber hose with fittings	1
406	Gasket	1

Models with PM1, PM2, 50/60 Hz

Kit, bush with O-ring PM1/2

Pos.	Pump type	JP5, JP6
	Model	B, D, E
	Kit No.	*98488493*
402	Bush 1" Gas Connection	1
403	Gasket flat	2

Exploded view for JP 5, JP 6 Booster

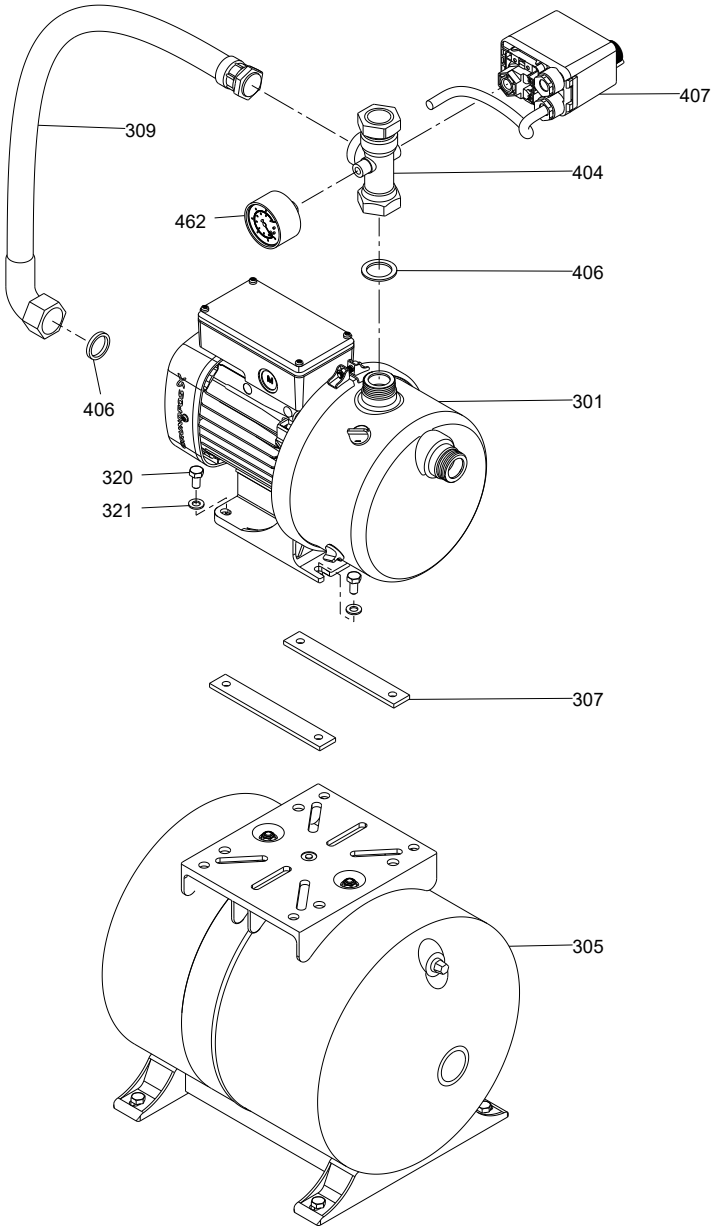

JP Booster PM 1 / PM 2

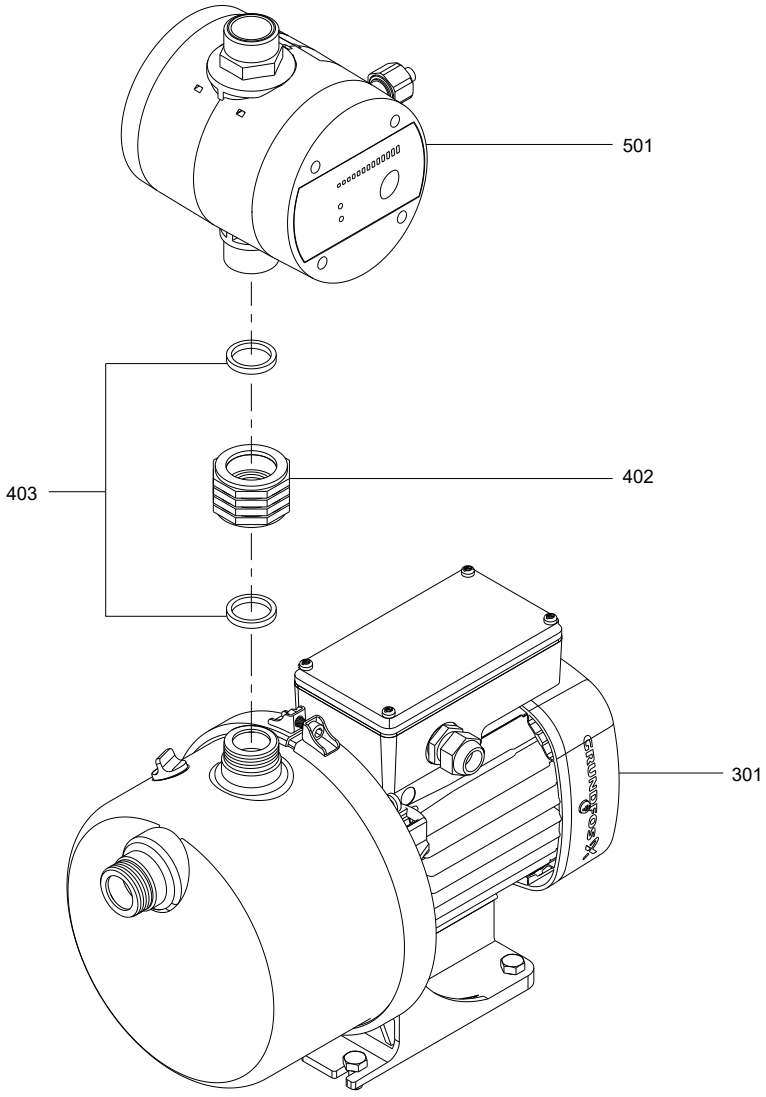

JP Booster with pressure tank

JPC, JPC PM

50/60 Hz

JPC Name change

Old name	New name
JPC 2	JPC 3-42
JPC 3	JPC 4-47
JPC 4	JPC 4-54

NOTE: The service kits uses the old name until 2017.

Kit, impeller

Pos.	Pump type	JPC	JPC	JPC	JPC	JPC	JPC
	Model	**2**	**3**	**4**	**2**	**3**	**4**
	Frequency	**50 Hz**	**50 Hz**	**50 Hz**	**60 Hz**	**60 Hz**	**60 Hz**
	Kit No.	***98715214***	***98715216***	***98715217***	***98715218***	***98715219***	***98715220***
16	O-ring	1	1	1	1	1	1
20	Diffuser	1	1	1	1	1	1
19	Impeller	1	1	1	1	1	1
21	Venturi set	1	1	1	1	1	1

Kit, shaft seal

Pos.	Pump type	JPC
	Model	**2, 3, 4**
	Frequency	**50/60 Hz**
	Kit No.	***98715213***
18	Shaft seal, stationary part	1
17	Shaft seal, rotating part	1
16	O-ring	1

Booster parts

See the section on pressure manager for PM parts.

Exploded view for JPC, JPC Booster

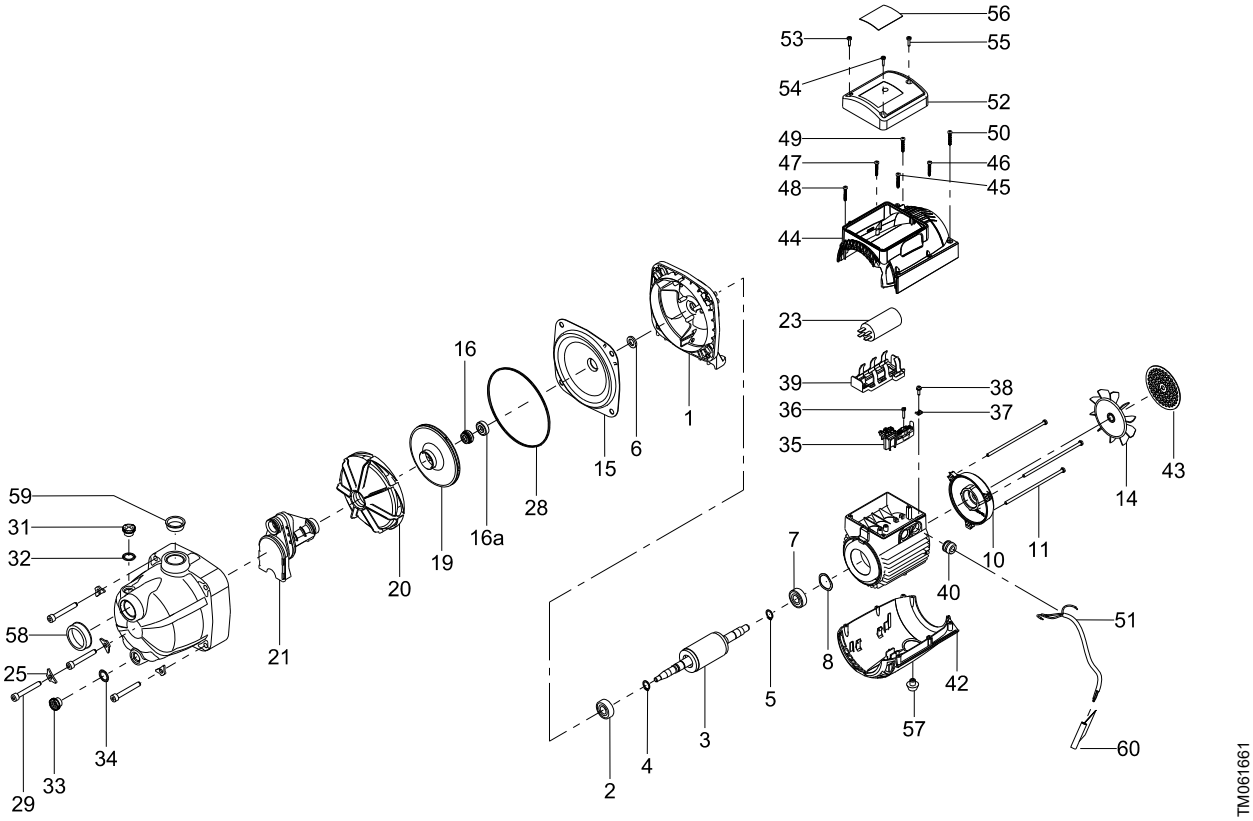

JPBasic, JPBasic Boosters, JPA, JPA PT, JPA PM

50 Hz

JPBasic and JPBasic Booster Name change

Old name	New name
JPBasic 2	JPA 3-42
JPBasic 3	JPA 4-47
JPBasic 4	JPA 4-54
JPBasic 5	JPA 5-61
JPBasic 7	JPA 8-62
JPBasic 9	JPA 12-41
JPBasic 10	JPA 12-51

NOTE: The service kits uses the old name until 2017.

Kit, hydraulic

Pos.	**Pump type**	**JPBasic**	**JPBasic**
	Model	**2**	**3, 4**
	Kit No.	***98715192***	***98715194***
67	Venturi set	1	1
28	O-ring	1	1
6	Diffuser	1	1
4	Impeller	1	1

Pos.	**Pump type**	**JPBasic**
	Model	**5, 7**
	Kit No.	***98715196***
2	Ejector body	1
9	Nozzle	1
8	Venturi	1
27	O-ring	1
29	O-ring	1
26	Priming plug	1
26a	Aluminium gasket	1
4	Impeller	1

Pos.	**Pump type**	**JPBasic**
	Model	**9, 10**
	Kit No.	***98715197***
33	Nozzle	1
34	Venturi	1
37	O-ring	1
35	O-ring	1
4	Impeller	1

Kit, shaft seal

Pos.	Pump type	JPBasic	JPBasic	JPBasic
	Model	**2, 3, 4**	**5, 7**	**9, 10**
	Kit No.	***98715199***	***98715201***	***98715202***
18	Shaft seal, stationary part	1	1	1
17	Shaft seal, rotating part	1	1	1
36	Disc seal	1	-	-
28	O-ring	1	1	1

Spare, capacitor

Pos.	Pump type	JPBasic	JPBasic	JPBasic	JPBasic
	Model	**2, 3**	**4**	**5, 9**	**7, 10**
	Kit No.	***98715206***	***98715207***	***98715209***	***98937571***
23	Capacitor, 12.5 uF	1	-	-	-
23	Capacitor, 16 uF	-	1	-	-
23	Capacitor, 31.5 uF	-	-	1	-
23	Capacitor, 40 uF	-	-	-	1

Booster parts

See the section on pressure manager for PM parts.

Exploded views for JPBasic

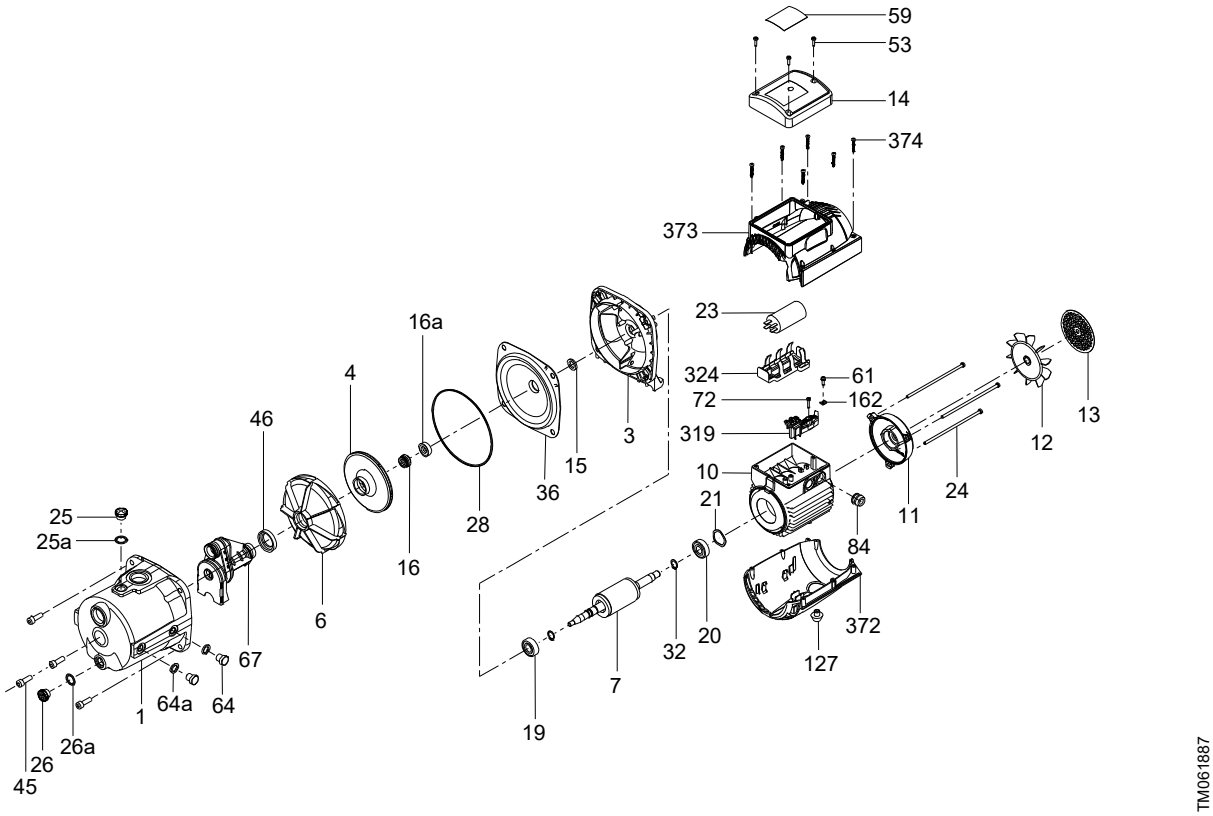

JPBasic 2, 3, 4, JPA 3-42, JPA 4-47, JPA 4-54

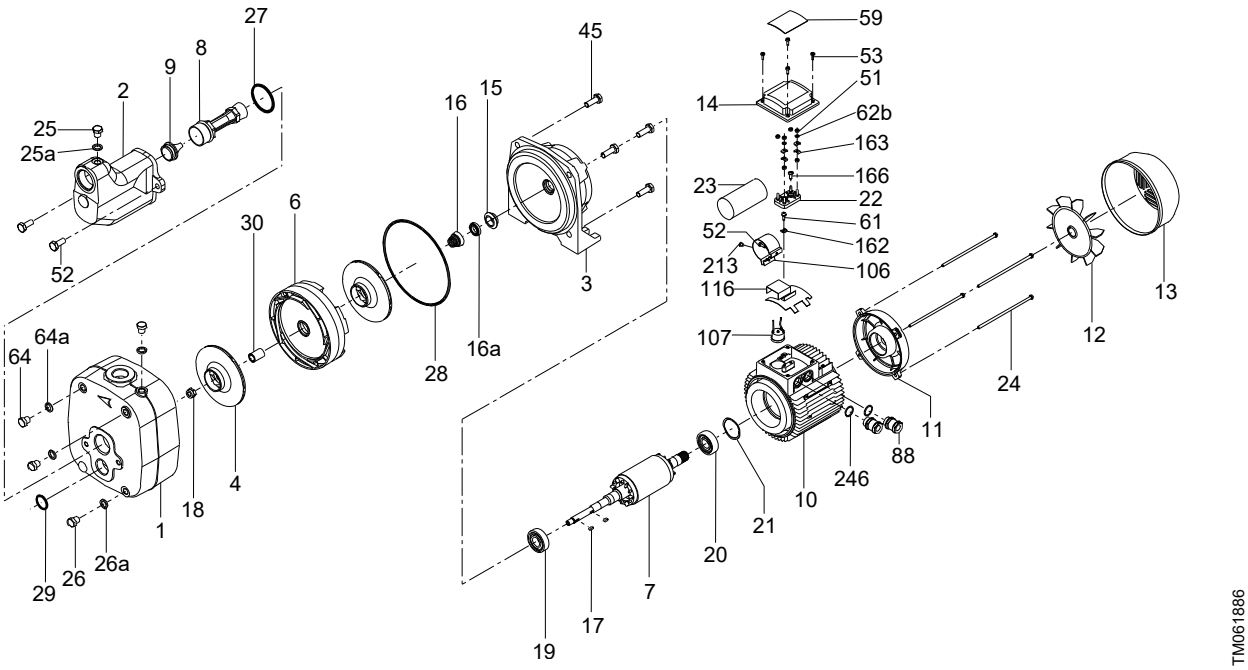

JPBasic 5, 7, JPA 5-61, JPA 8-62

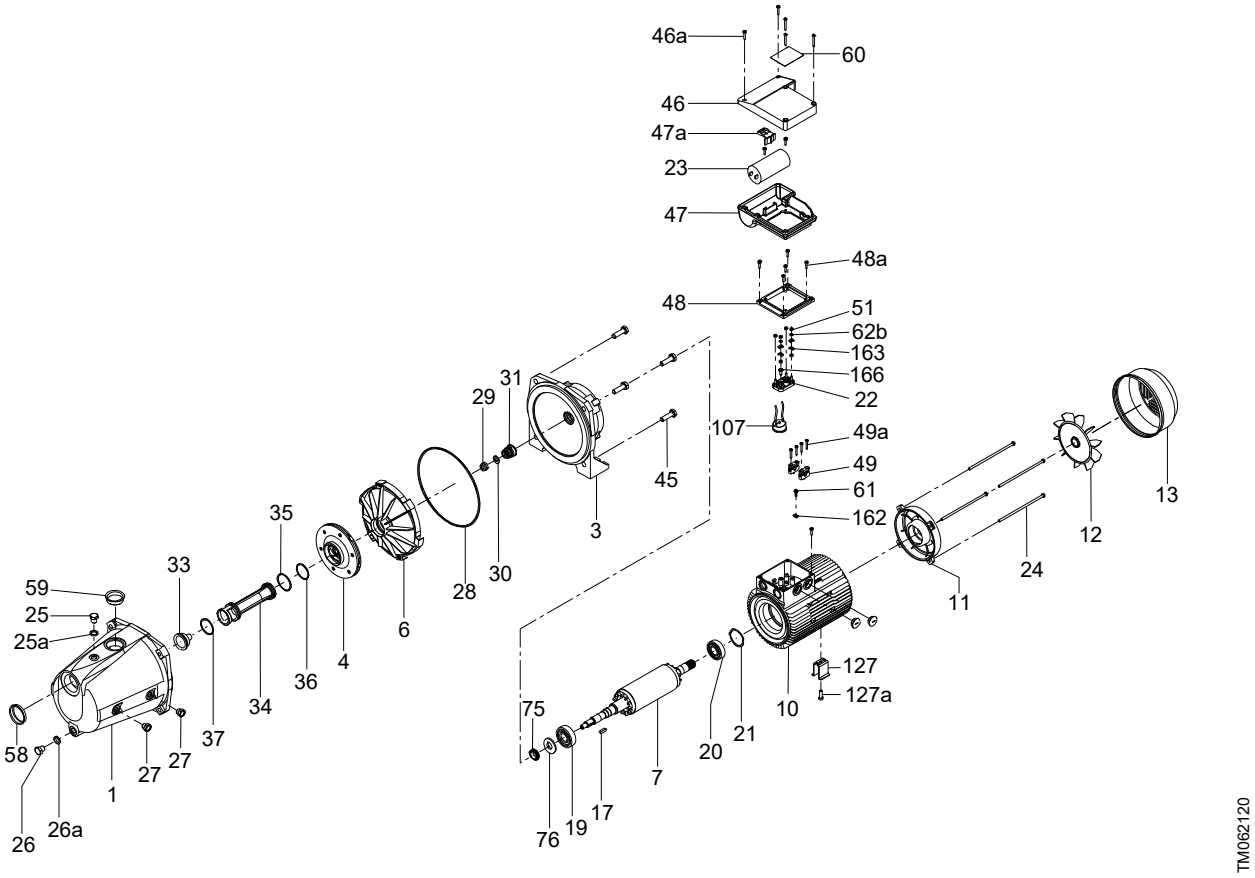

JPBasic 9, 10, JPA 12-41, JPA 12-51

JDBasic, JDBasic Boosters, JPD, JPD PT

50 Hz

JDBasic and JDBasic Booster Name change

Old name	New name
JDBasic 2	JPD 4-47
JDBasic 4	JPD 4-54
JDBasic 5	JPD 5-61
JDBasic 7	JPD 8-62

NOTE: The service kits uses the old name until 2017.

Kit, hydraulic

Pos.	Pump type	JDBasic	JDBasic	JDBasic	JDBasic
	Model	**2**	**4**	**5**	**7**
	Frequency	**50/60 Hz**	**50 Hz**	**50 Hz**	**50/60 Hz**
	Kit No.	***98715416***	***98715417***	***98715419***	***98715442***
36	Gasket	1	1	-	-
28	O-ring	1	1	1	1
6	Diffuser	1	1	1	1
4	Impeller	1	1	2	2

Booster parts

See the section on pressure manager for PM parts.

Exploded views for JDBasic

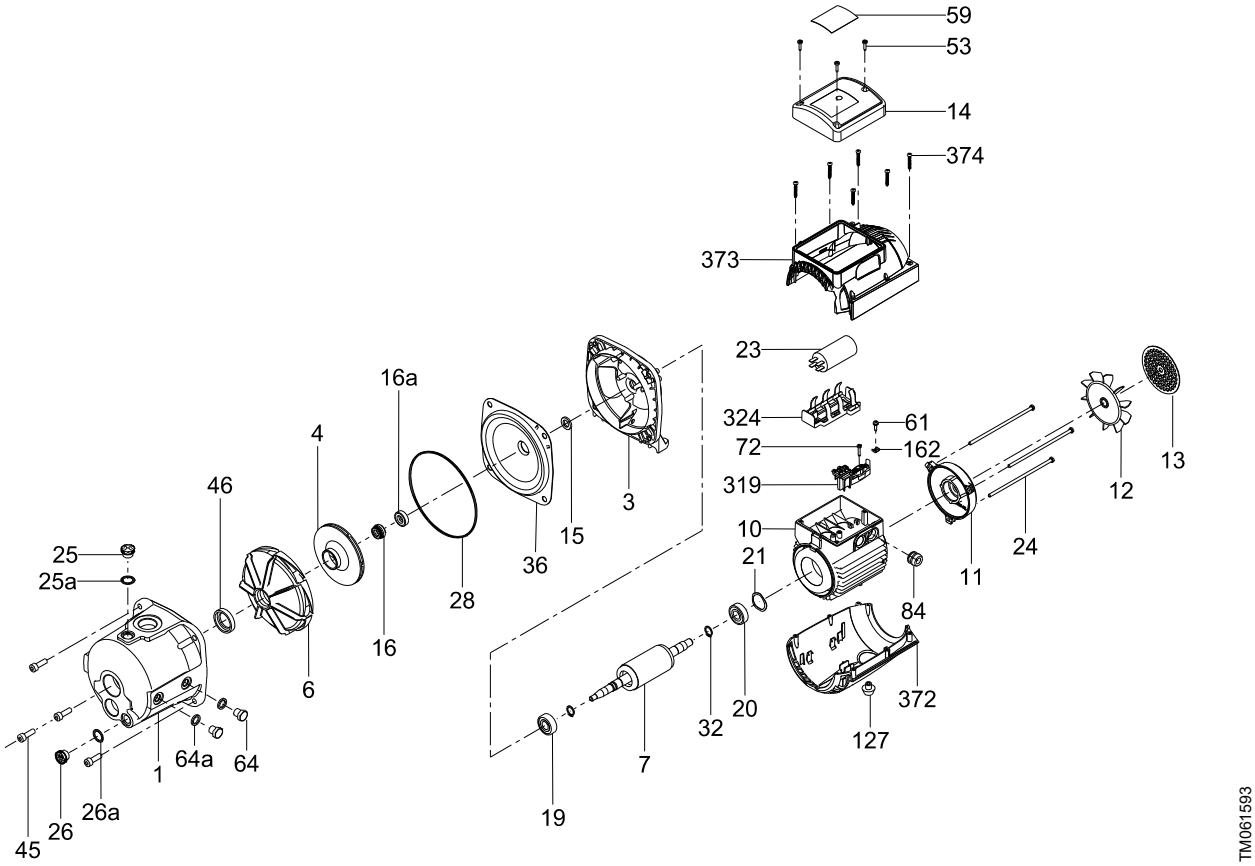

JDBasic 2, 4, JPD 4-47, JPD 4-54

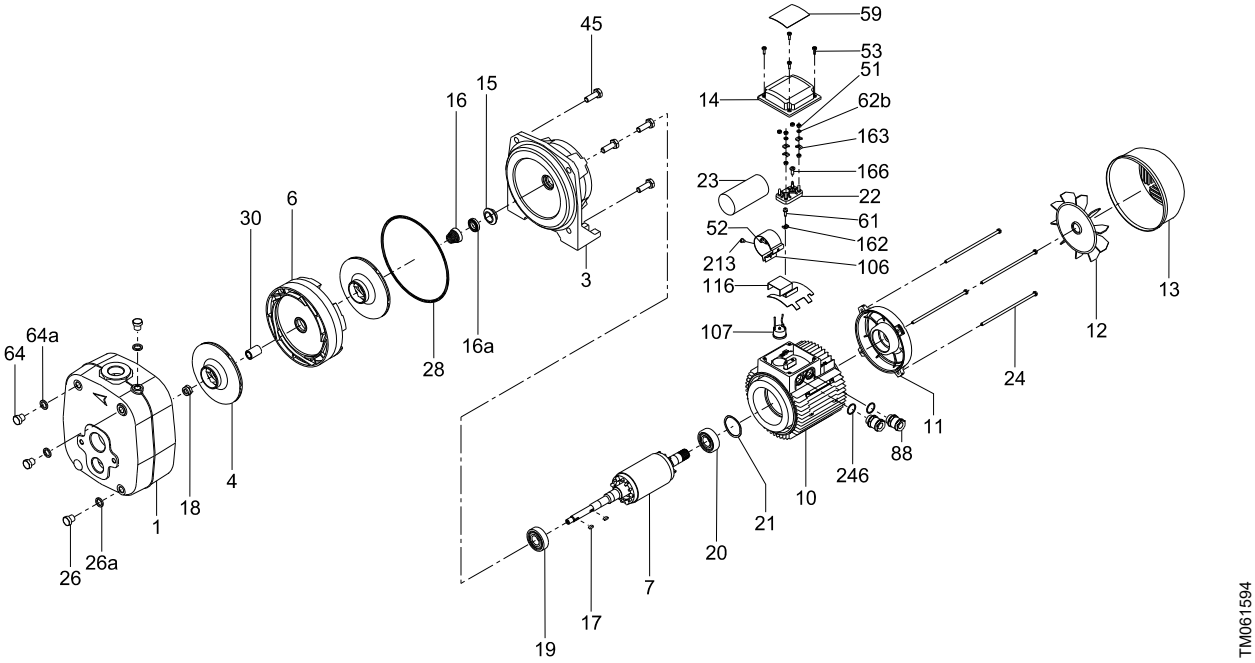

JDBasic 5, 7, JPD 5-61, JPD 8-62

JP PS USA (new models)

Kit, hose for pressure switch, 115-230 V, 60 Hz

Pos.	Pump type	JP PS 13 03 137 / JP PS 18 05 154 / JP PS 18 07 177 / JP PS 22 10 157
	Kit No.	***98289931***
74	Hose 1/4 NPT	1
71	Clip	1
72	Fitting 1/4 NPT	1
73	O-ring	1

Kit, hydraulic 60 Hz

Pos.	Pump type	JP PS 13 03 137	JP PS 18 05 154	JP PS 18 07 177	JP PS 22 10 157
	Kit No.	***99628493***	***99628496***	***99628497***	***99628499***
19	Impeller	1	1	1	1
20	Diffuser	1	1	1	1
21	Venturi tube	1	1	1	1
28	O-ring	1	1	1	1
21a	O-ring	1	1	1	1
13	O-ring	1	1	1	1

Kit, motor shell

Pos.	Pump type	JP PS 13 03 137 / JP PS 18 05 154	JP PS 18 07 177 / JP PS 22 10 157
	Kit No.	***99628502***	***99628513***
44	Upper motor housing	1	1
42	Lower motor housing	1	1
43	Motor housing grid	1	1
53	Screws	6	6

Kit, O-ring

Pos.	Pump type	JP PS 13 03 137 / JP PS 18 05 154 / JP PS 18 07 177 / JP PS 22 10 157
	Kit No.	***99628546***
13, 21a	**O-ring**	**2**
28	O-ring	1

Kit, pump housing

Pos.	Pump type	JP PS 13 03 137 / JP PS 18 05 154 / JP PS 18 07 177 / JP PS 22 10 157
	Model	**NPT thread**
	Kit No.	***99628515***
1	Pump housing	1
28	O-ring	1
92	Pump house ring	1
93	Screw	1
94	Nut	1
	Washer	1

Kit, plug

Pos.	Pump type	JP PS 13 03 137 / JP PS 18 05 154 / JP PS 18 07 177 / JP PS 22 10 157
	Kit No.	***99628516***
26	Plug	2
32	O-ring	2

Kit, shaft seal

Pos.	Pump type	JP PS 13 03 137 / JP PS 18 05 154 / JP PS 18 07 177 / JP PS 22 10 157
	Kit No.	***99628500***
16	Shaft seal, rotary part	1
16a	Shaft seal, stationary part	1
21a	O-ring	1

Kit, terminal box cover, 115-230 V, 60 Hz

Pos.	Pump type	JP PS 13 03 137 / JP PS 18 05 154 / JP PS 18 07 177 / JP PS 22 10 157
	Kit No.	***99597813***
51	Terminal box cover	1
53	Screws	6

Spare, capacitor

Pos.	Pump type	JP PS 13 03 137	JP PS 18 05 154	JP PS 18 07 177	JP PS 22 10 157
	Kit No.	***99628551***	***99628552***	***99628552***	***99628554***
161	Capacitor	1	1	1	1

Spare, motor fan

Pos.	Pump type	JP PS 13 03 137 / JP PS 18 05 154	JP PS 18 07 177 / JP PS 22 10 157
	Kit No.	***99628558***	***99628559***
14	Motor fan	1	1

Spare, motor foot

Pos.	Pump type	JP PS 13 03 137 / JP PS 18 05 154 / JP PS 18 07 177 / JP PS 22 10 157
	Kit No.	***99658433***
56	Motor foot	1

Spare, pressure switch, 115-230 V, 60 Hz

Pos.	Pump type	JP PS 13 03 137 / JP PS 18 05 154 / JP PS 18 07 177 / JP PS 22 10 157
	Kit No.	***98296792***
407	Pressure switch	1

Exploded view for JP PS 13 03 137 / JP PS 18 05 154 / JP PS 18 07 177 / JP PS 22 10 157

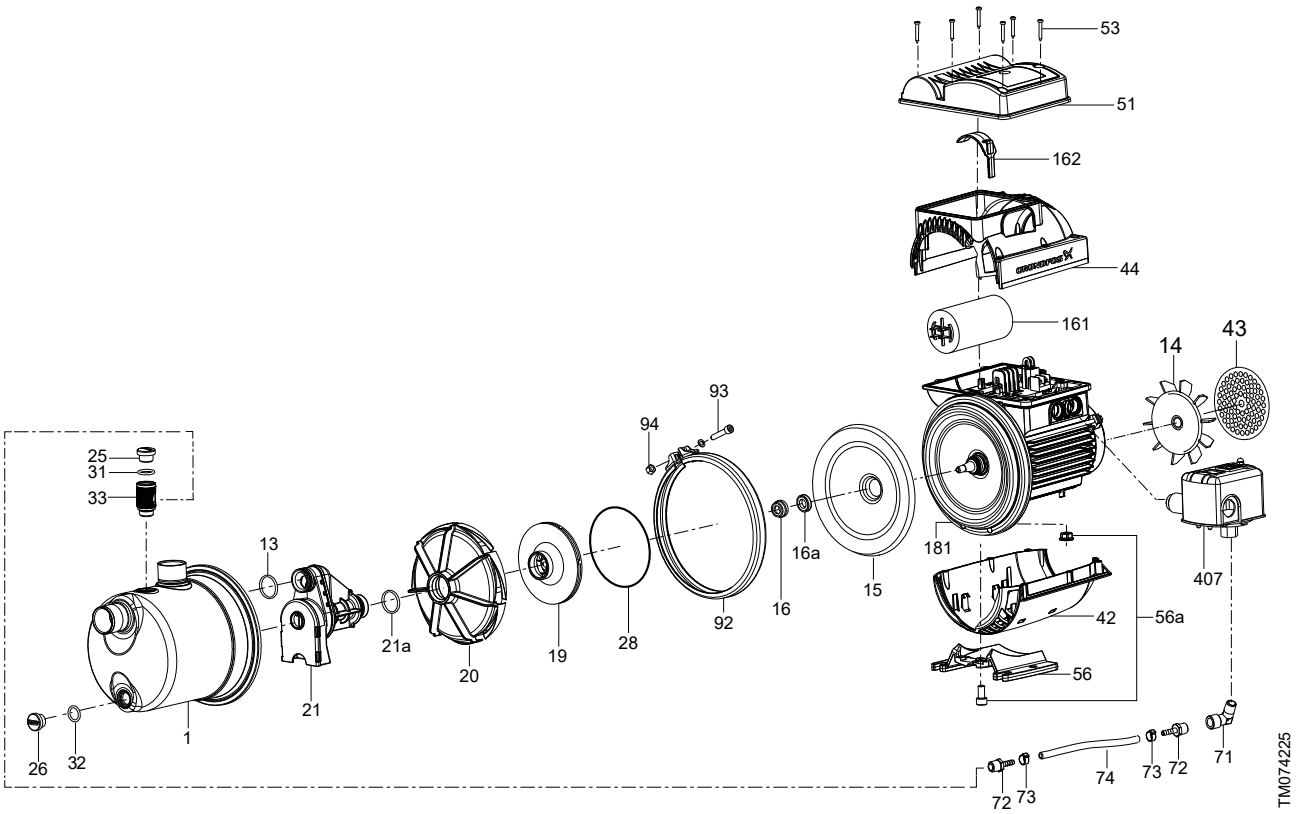

Jet booster USA (previous models)

60 Hz

Kit, fan and fan cover

Pos.	Pump type	Jet boosters		
	Model	JP05D-CI, JP03S-CI, JP03S-EC, JP05S-CI, JP05S-EC, JP05S-SS, JP07S-CI-1, JP07S-EC-1, JP07S-SS-1	JP07D-CI, JP07S-CI, JP07S-EC, JP07S-SS, JP10S-CI, JP10S-CI-1, JP10S-EC, JP10S-SS, JP10S-SS-1, JP10S-EC-1	JP15S-CI, JP15D-CI, JP20S-CI-1, JP20D-CI, JP20S-CI, JP30S-CI
	Kit No	*98289939*	*98289942*	*98289944*
12	Fan	1	1	1
13	Fan cover	1	1	1

Kit, hose for pressure switch

Pos.	Pump type	Jet boosters	Jet boosters	Jet boosters
	Model	JP05D-CI, JP03S-CI, JP05S-CI, JP07S-CI-1, JP07D-CI, JP07S-CI, JP10S-CI, JP10S-CI-1	JP05S-SS, JP03S-EC, JP05S-EC, JP07S-EC-1, JP07S-SS-1, JP07S-EC, JP07S-SS, JP10S-EC, JP10S-SS, JP10S-SS-1, JP10S-EC-1	JP15D-CI, JP15S-CI, JP20S-CI-1, JP20D-CI, JP20S-CI, JP30S-CI
	Kit No.	*98289897*	*98289931*	*98289935*
43	Clip	2	2	2
41	Fitting 1/4 Gas	1	-	-
41	Fitting 1/4 NPT	1	1	2
41	Fitting 3/8 NPT		1	-
44	Hose 1/4 Gas	1	-	2
44	Hose 1/4 NPT	1	1	2
46	Tube	40 cm	40 cm	40 cm
-	O-ring	-	1	-

Kit, hydraulic

Pos.	Pump type	Jet boosters						
	Model	JP035-CI	JP03S-EC	JP05D-CI	JP05S-CI JP05S-SS	JP05S-EC	JP07S-CI-1 JP07S-SS-1	JP07S-EC-1
	Kit No.	*98419545*	*98419546*	*98288758*	*98288772*	*98419548*	*98419550*	*98419552*
6	Diffuser	1	1	1	1	1	1	1
4	Impeller	1	1	1	1	1	1	1
67	Venturi set	1	1		1	1	1	

Pos.	Pump type	Jet boosters						
	Model	JP07D-CI	JP07S-CI JP07S-SS	JP07S-EC	JP10S-CI JP10S-SS	JP10S-CI-1 JP10S-SS-1	JP10S-EC	JP15D-CI
	Kit No.	*98288824*	*98288827*	*98419553*	*98288830*	*98419554*	*98419558*	*98288841*
6	Diffuser	1	1	1	1	1	1	1
4	Impeller	1	1	1	1	1	1	1
67	Venturi set		1	1	1	1	1	1

Pos.	Pump type	Jet boosters					
	Model	JP15S-CI	JP20S-CI-1	JP20D-CI	JP20S-CI	JP30S-CI	JP10S-EC-1
	Kit No.	*98288842*	*98419559*	*98288845*	*98288846*	*98288848*	*98419571*
6	Diffuser	1	1	1	1	1	1
4	Impeller	1	1	1	1	1	1
34	Ejector kit	1	1	1	1	1	
67	Venturi set	-	-	-	-	-	1

Kit, motor stool

Pos.	Pump type	Jet boosters			
	Model	JP03S-CI, JP03S-EC, JP05D-CI, JP05S-CI, JP05S-EC, JP05S-SS, JP07S-CI-1, JP07S-EC-1,JP07S-SS-1	JP07D-CI, JP07S-CI, JP07S-EC, JP07S-SS, JP10S-CI, JP10S-CI-1, JP10S-EC, JP10S-SS, JP10S-SS-1, JP10S-EC-1	JP15D-CI, JP15S-CI, JP20D-CI, JP20S-CI	JP30S-CI, JP20S-CI-1
	Kit No.	98296753	98296754	98296755	98296756
28	O-ring	1	1	1	1
36	Shaft seal disc	1	1	-	-
16	Shaft seal, stationary part	1	1	1	1
16a	Shaft seal, rotating part	1	1	1	1
3	Motor stool, aluminium	1	1	-	-
3	Motor stool, cast iron	-	-	1	1

Kit, plugs and O-rings

Pos.	Pump type	Jet boosters	Jet boosters
	Model	JP03S-CI, JP03S-EC, JP05D-CI, JP05S-CI, JP05S-EC, JP05S-SS, JP07S-SS-1, JP10S-EC-1, JP07D-CI, JP07S-CI, JP07S-EC, JP07S-SS, JP10S-CI, JP10S-CI-1, JP10S-SS-1	JP15D-CI, JP15S-CI, JP20S-CI-1, JP20D-CI, JP20S-CI, JP30S-CI
	Kit No.	98288867	98288904
26/26a	Plug with O-ring	2	-
26	Plug	-	2
26a	Plug gasket	-	2

Kit, shaft seal + impeller

Pos.	Pump type	Jet boosters								
	Model	JP05D-CI JP07S-CI JP07S-EC JP07S-SS	JP03S-CI JP03S-EC JP05S-CI JP05S-EC	JP05S-SS JP07S-CI-1 JP07S-EC-1 JP07S-SS-1	JP07D-CI JP10S-CI JP10S-CI-1 JP10S-EC	JP10S-SS JP10S-SS-1 JP10S-EC-1	JP15S-CI JP15D-CI	JP20S-CI JP20D-CI	JP20S-CI-1	JP30S-CI
	Kit No.	98288907	98288909		98288931		98288932	98288934	98419716	98288935
16, 16a	Shaft seal kit	1	1		1		1	1	1	1
4	Impeller	1	1		1		1	1	1	1

Kit, T-box cover

Pos.	Pump type	Jet boosters	Jet boosters	Jet boosters
	Model	JP05D-CI, JP03S-CI, JP03S-EC, JP05S-CI, JP05S-EC, JP05S-SS, JP07S-CI-1, JP07S-EC-1, JP07S-SS-1	JP07D-CI, JP07S-CI, JP07S-EC, JP07S-SS	JP10S-CI, JP10S-CI-1, JP10S-EC, JP10S-SS, JP10S-SS-1, JP10S-EC-1
	Kit No.	98059738	98059736	98059737
61	Screw	1	1	1
46a	Screw	5	5	5
53	PCB	1	1	1
46	Terminal cover	1	1	1
47	Terminal housing	1	1	1
52	Dual voltage block	1	1	1
72	Screw	1	1	1
319	Cable clip	1	1	1
47a	Capacitor Clip	1	1	1
162	Earth cable fasten	1	1	1

Pos.	Pump type	Jet boosters	Jet boosters
	Model	JP15D-CI, JP15S-CI	JP30S-CI, JP20S-CI, JP20D-CI, JP20S-CI-1
	Kit No.	98059739	98291516
46a	Screw	4	8
-	Screw	2	2
-	Screw	3	3

Pos.	Pump type	Jet boosters	Jet boosters
	Model	JP15D-CI, JP15S-CI	JP30S-CI, JP20S-CI, JP20D-CI, JP20S-CI-1
	Kit No.	*98059739*	*98291516*
46	Terminal cover	1	1
47	Terminal housing	1	1
22	Terminal housing adaptor	-	1
61	Screw	1	1
47a	Capacitor Clip	1	1
162	Earth cable fasten	1	1

Spare, capacitor

Pos.	Pump type	Jet boosters					
	Model	JP05D-CI JP05S-CI JP05S-EC JP05S-SS	JP07S-CI-1 JP07S-EC-1 JP07S-SS-1	JP07D-CI JP07S-CI JP07S-EC JP07S-SS	JP15D-CI JP15S-CI JP20S-CI-1	JP03S-CI JP03S-EC	JP20D-CI JP20S-CI JP30S-CI
	Kit No.		*98298105*		*98298114*	*98298117*	
23	Capacitor, 50 uF		1		-	-	
23	Capacitor, 80 uF		-		-	-	
23	Capacitor, 31.5 uF		-		1	-	
23	Capacitor, 40 uF		-		-	1	

Spare, pressure switch

Pos.	Pump type	Jet boosters
	Model	All
	Kit No.	*98296792*
40	Pressure Switch	1

Exploded view for Jet boosters USA

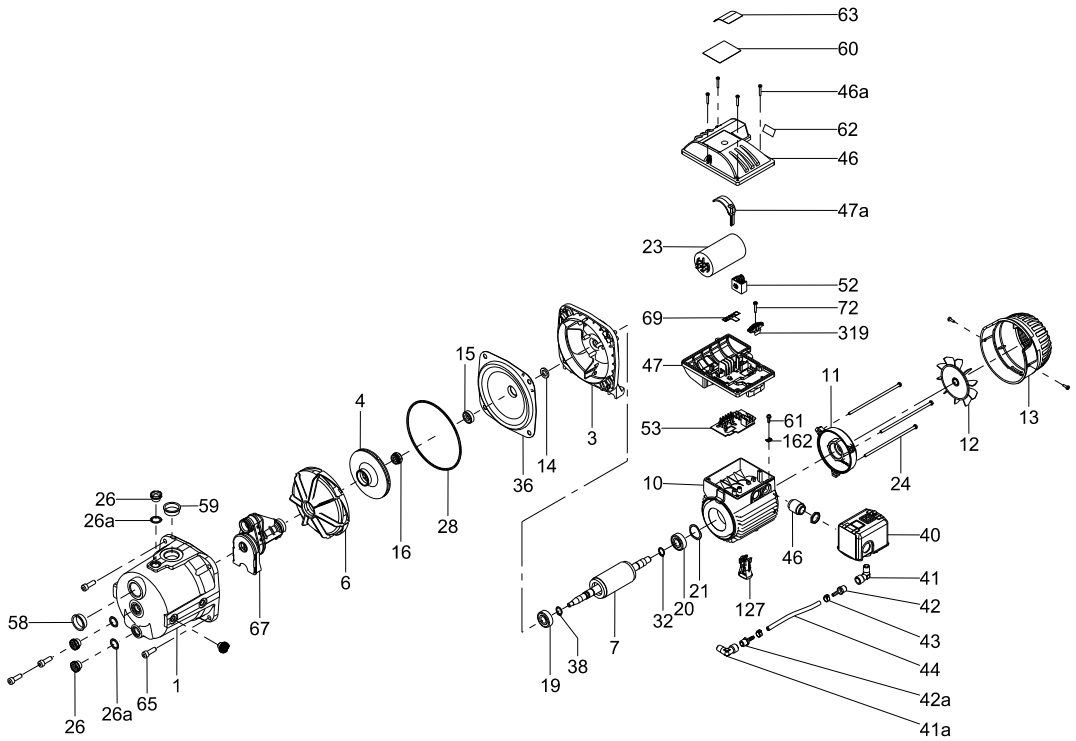

JP03S-CI, JP05S-CI, JP07S-CI, JP10S-CI

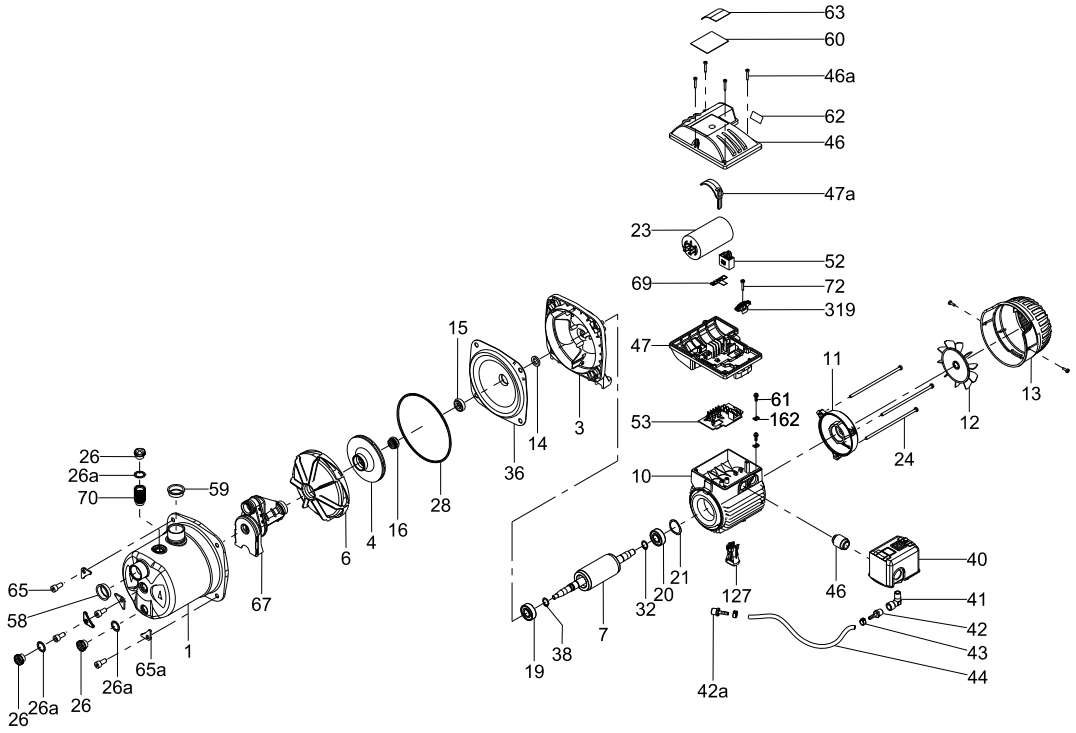

JP05S-SS, JP07S-SS, JP10S-SS

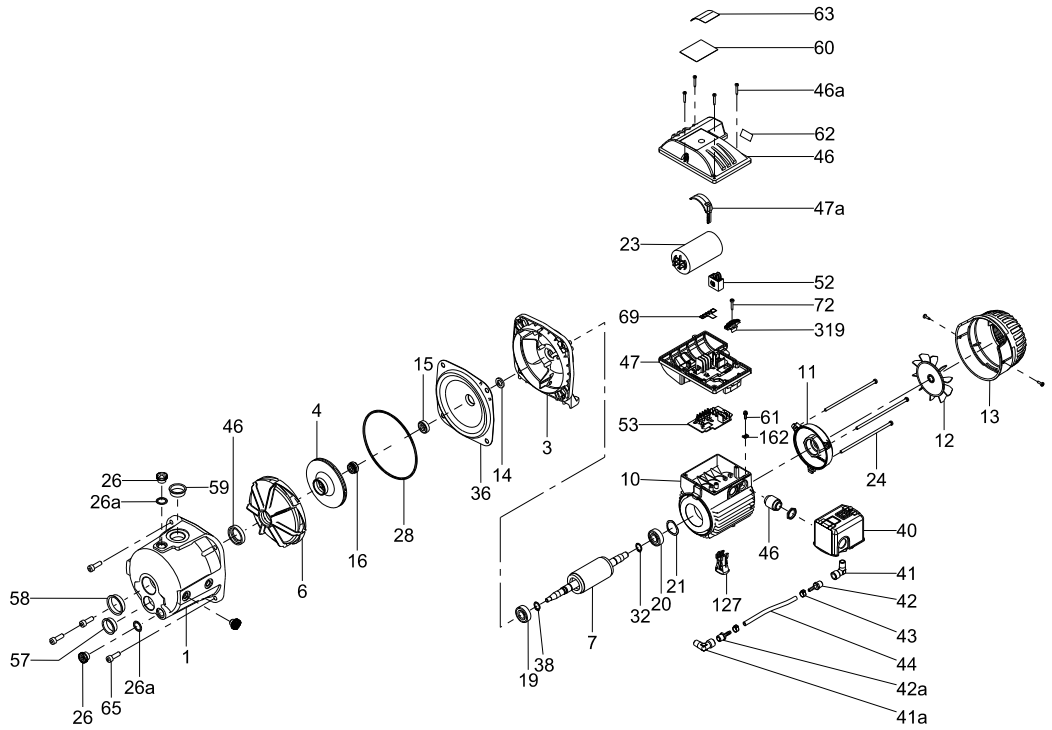

JP15D-CI, JP20D-CI

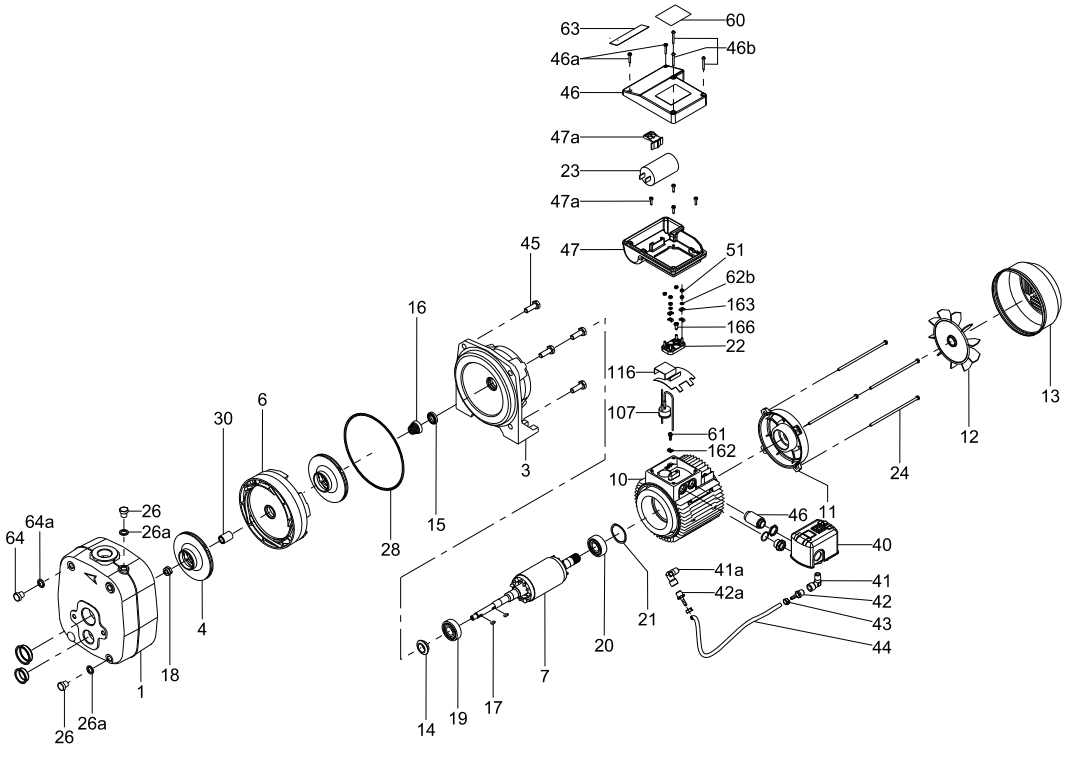

JP05D-CI, JP07D-CI

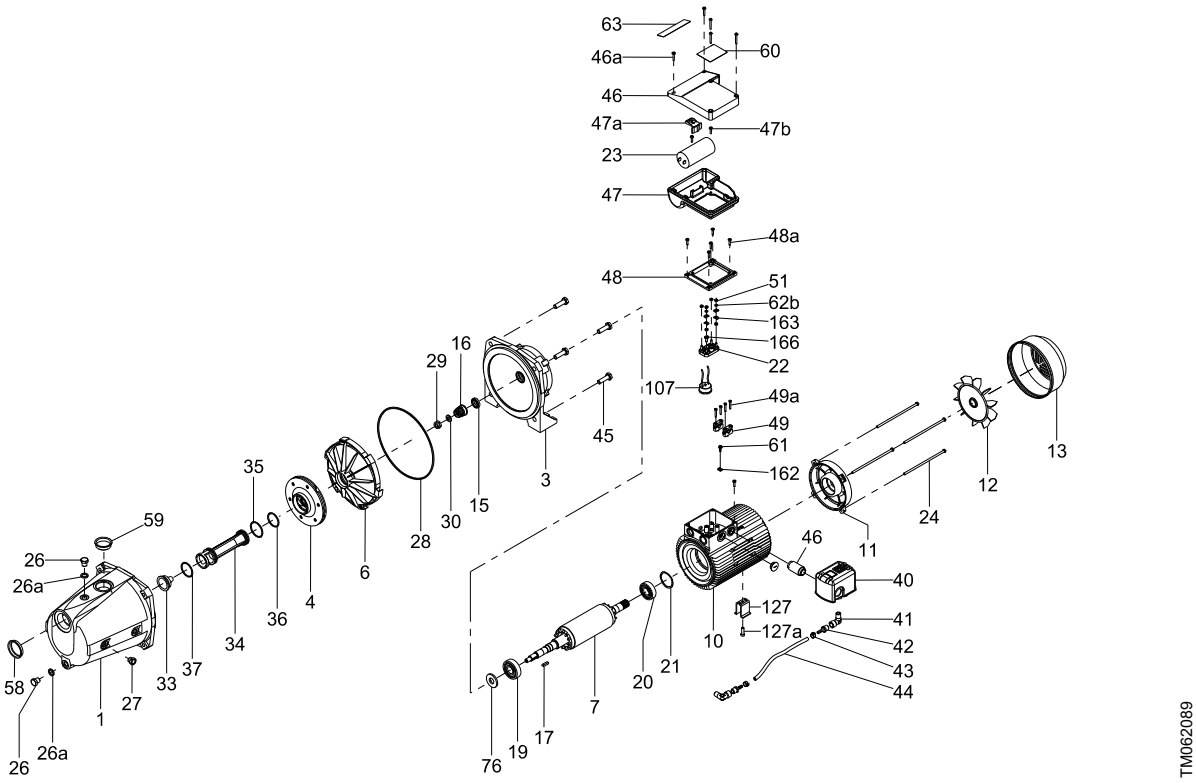

JP20S-CI-1, JP30S-CI

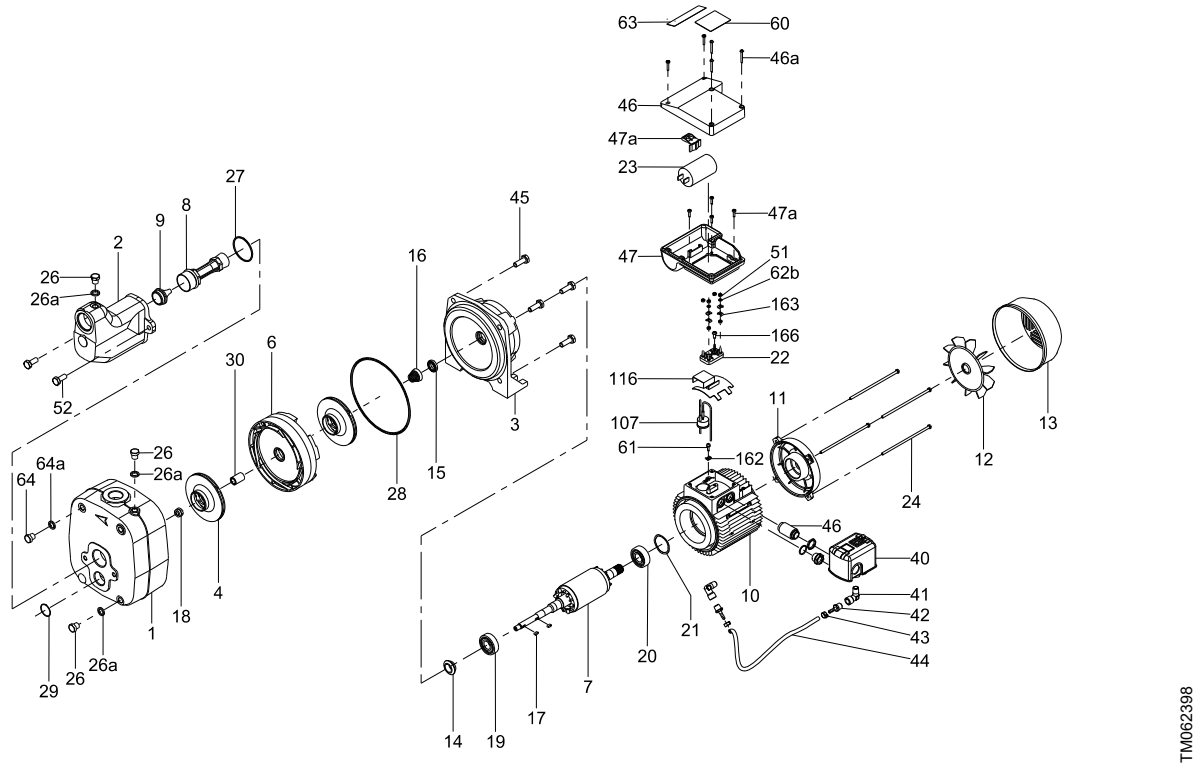

JP20S-CI, JP15S-CI

Trademarks displayed in this material, including but not limited to Grundfos and the Grundfos logo, are registered trademarks owned by The Grundfos Group. © 2025 Grundfos Holding A/S, all rights reserved.

93429229 **05.2025**
ECM: 1422474

GRUNDFOS Holding A/S
Poul Due Jensens Vej 7
DK-8850 Bjerringbro
Tel: +45 87 50 14 00
www.grundfos.com

GRUNDFOS