MAGNA, international

Service Kit Catalogue

GRUNDFOS

Table of contents

1. MAGNA1, international 3
Type key 3
MAGNA1 service parts 4

2. MAGNA3, international 14
Type key 14
MAGNA3 service parts 15

1. MAGNA1, international

Type key

Example

MAGNA1 D-80 -120-F-N-360

Example	MAGNA1	(D)	80	-120	(F)	(N)	360
Pos.	1	2	3	4	5	6	7

Pos.	Code	Explanation	Designation
1	**MAGNA1**	MAGNA3	Type range
2	**(D)**	Single-head pump Twin-head pump	
3	**80**		Nominal diameter (DN) of inlet and outlet ports [mm]
4	**-120**		Maximum head [dm]
5	**(F)**	Threaded Flange	Pipe connection
6	**(N)**	Cast iron Stainless steel	Pump housing material
7	**360**		Port-to-port length [mm]

MAGNA1 service parts

MAGNA1 plug-connected versions

Kit, control box, unconfigured Model A and C

Kit No.	99363376	99364500
DN	Model	
25-	40 (6/10 bar)	40 (16 bar)
	60 (6/10 bar)	60 (16 bar)
	80 (6/10 bar)	80 (16 bar)
	100 (6/10 bar)	100 (16 bar)
	-	120 (16 bar)
	-	120 (6/10 bar)
32-	40 (6/10 bar)	40 (16 bar)
	60 (6/10 bar)	60 (16 bar)
	80 (6/10 bar)	80 (16 bar)
	-	100 (16 bar)
	-	100 (6/10 bar)
		120 (6/10 bar)
40-	-	40 (16 bar)
	-	60 (16 bar)
	-	40 (6/10 bar)
	-	60 (6/10 bar)

Kit, control box, configured single-head pumps Model A

Pump type	Kit No.	
	PN 6/10	PN 16
MAGNA1 25-40 (N)	99487535	99487536
MAGNA1 25-60 (N)	99487538	99487539
MAGNA1 25-80 (N)	99487541	99487542
MAGNA1 25-100 (N)	99487544	99487545
MAGNA1 25-120 (N)	99487547	99487548
MAGNA1 32-40 (F) (N)	99089448	99261013
MAGNA1 32-60 (N)	99487556	99487557
MAGNA1 32-80 (N)	99487562	99487563
MAGNA1 32-100 (N)	99487568	99487569
MAGNA1 32-120 (N)	99426869	99426951
MAGNA1 40-40 (N)	99487575	99487574
MAGNA1 40-60 (N)	99487578	99487577

Kit, control box, configured twin-head pumps PN 6/10, Model A

Pump type	Kit No.	
	Head 1	Head 2
MAGNA1 D 32-40 (F)	99487580	
MAGNA1 D 32-60 (F)	99487584	
MAGNA1 D 32-80 (F)	99487588	
MAGNA1 D 32-100 (F)	99487592	99487677
MAGNA1 D 40-40 (F)	99487597	99487682
MAGNA1 D 40-60 (F)	99487599	99487684

Kit, control box, configured twin-head pumps PN 16, Model A

Pump type	Kit No.	
	Head 1	Head 2
MAGNA1 D 32-40 (F)	-	99487695
MAGNA1 D 32-60 (F)	99487653	99487696
MAGNA1 D 32-80 (F)	99487589	99487674
MAGNA1 D 32-100 (F)	99487593	99487678
MAGNA1 D 40-40 (F)	99487596	99487682
MAGNA1 D 40-60 (F)	99487598	99487683

Pos.	Description	Quantity
163	Complete control box	1
163a	Screw	2
164	Control box cover	1
164a	Screw	5

Kit, control box, configured single-head pumps Model C

Pump type	Kit No.	
	PN 6/10	PN 16
MAGNA1 25-40 (N)	99487535	99487536
MAGNA1 25-60 (N)	99487538	99487539
MAGNA1 25-80 (N)	99487541	99487542
MAGNA1 25-100 (N)	99487544	99487545
MAGNA1 25-120 (N)	99487547	99487548
MAGNA1 32-40 (F) (N)	99487550	99487551
MAGNA1 32-60 (N)	99487556	99487557
MAGNA1 32-80 (N)	99487562	99487563
MAGNA1 40-40 (N)	99487575	99487574
MAGNA1 40-60 (N)	99487578	99487577

Kit, control box, configured twin-head pumps PN 6/10, Model C

Pump type	Kit No.	
	Head 1	Head 2
MAGNA1 D 32-40 (F)	99487580	99487665
MAGNA1 D 32-60 (F)	99487584	99487669
MAGNA1 D 32-80 (F)	99487588	99487673
MAGNA1 D 32-100 (F)	99487592	99487677
MAGNA1 D 40-40 (F)	99487597	99487682
MAGNA1 D 40-60 (F)	99487599	99487684

Kit, control box, configured twin-head pumps PN 16, Model C

Pump type	Kit No.	
	Head 1	Head 2
MAGNA1 D 32-40 (F)	99487652	99487695
MAGNA1 D 32-60 (F)	99487653	99487696
MAGNA1 D 32-80 (F)	99487589	99487674
MAGNA1 D 32-100 (F)	99487593	99487678
MAGNA1 D 40-40 (F)	99487596	99487681
MAGNA1 D 40-60 (F)	99487598	99487683

Pos.	Description	Quantity
163	Complete control box	1
163a	Screw	2
164	Control box cover	1
164a	Screw	5

Kit, Control box cover, model C

Pos.	Kit No.	99364501
164	Control box cover	1
-	Foil for cover	1

Kit, plug

Pos.	Description	Model A	Model C
	Kit No.	99461932	99461932
181	Plug (ALPHA)	1	1
-	Connector, angled	-	1
-	Connector, angled	-	1

Kit, pump head Model A and C Including shaft with impeller and rotor can

Pos.	Description	DN 25/32 (10 bar) (stainless rotor can)	DN 25/32 (16 bar) (Composite rotor can)	DN 40 (16 bar) (Composite rotor can)
	Kit No.	98357751	98357752	98357753
92	Clamp	1	1	1
163a	Screw	2	2	2
301	Pump head	1	1	1

Kit, two-way flap

Pos.	Description	DN32	DN40
	Kit No.	96407253	96407254
215	Pin	1	1
217	Rubber flap	1	1

Spare, clamp

Pos.	Kit No.	98148760
92	Clamp cpl.	1

Spare, insulation shells

Description	Kit No.
DN25/DN32 180	98615808
DN32-100 F 220	98615809
DN40-60 F 220	98615810

Spare, O-ring

Pos.	Kit No.	98357755
301a	O-ring	1

Spare, pump housing Model A and C

Pos.	Pump DN size	MAGNA 1 DN32
	Size	PN6, PN10, PN16
	Kit No.	98660054
-	Pump housing cpl.	1

Service pump housings are only available for flanged versions.

Exploded view for MAGNA1 plug-connected versions
Model A

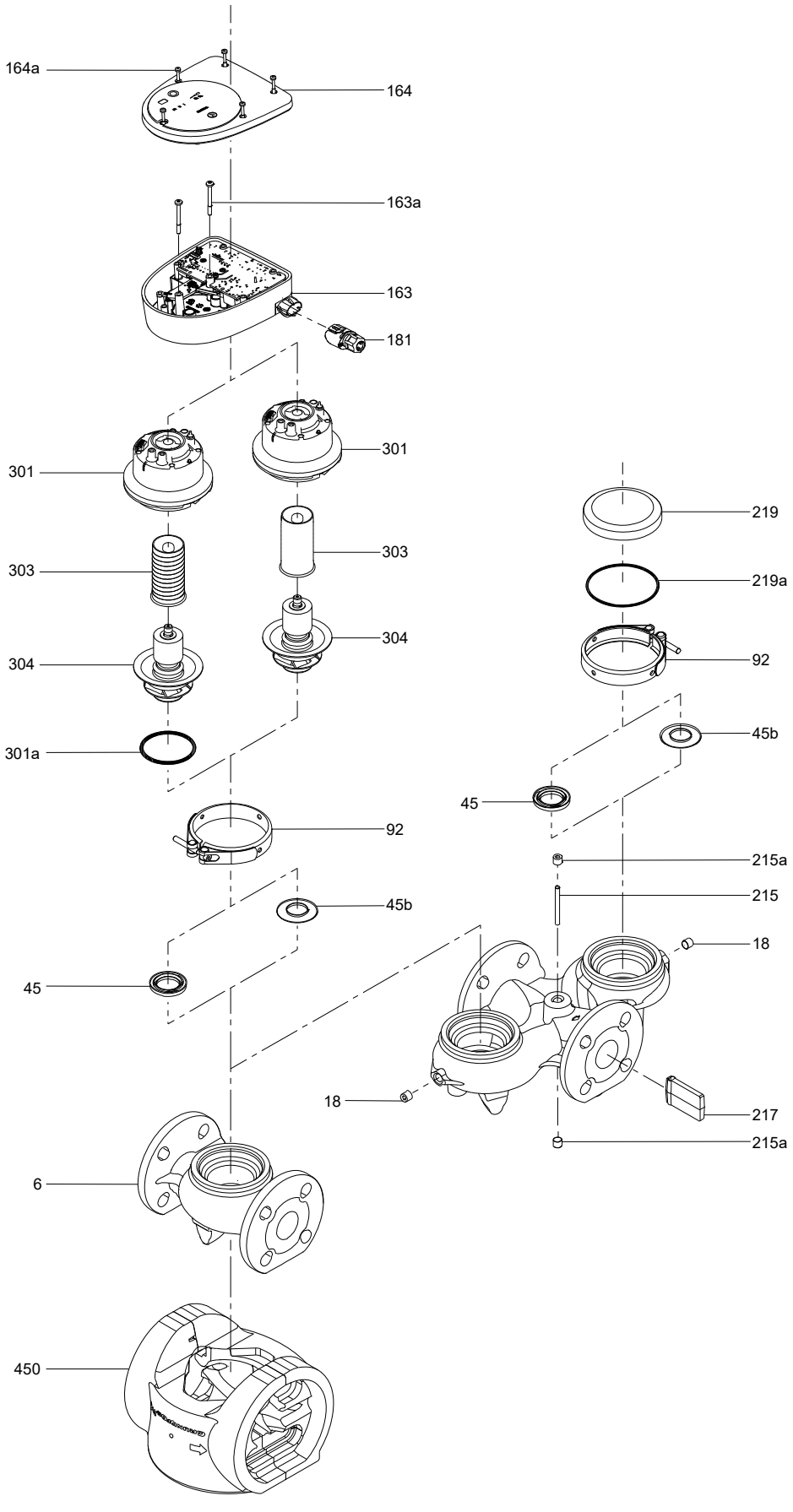

Exploded view for MAGNA1 plug-connected versions
Model C

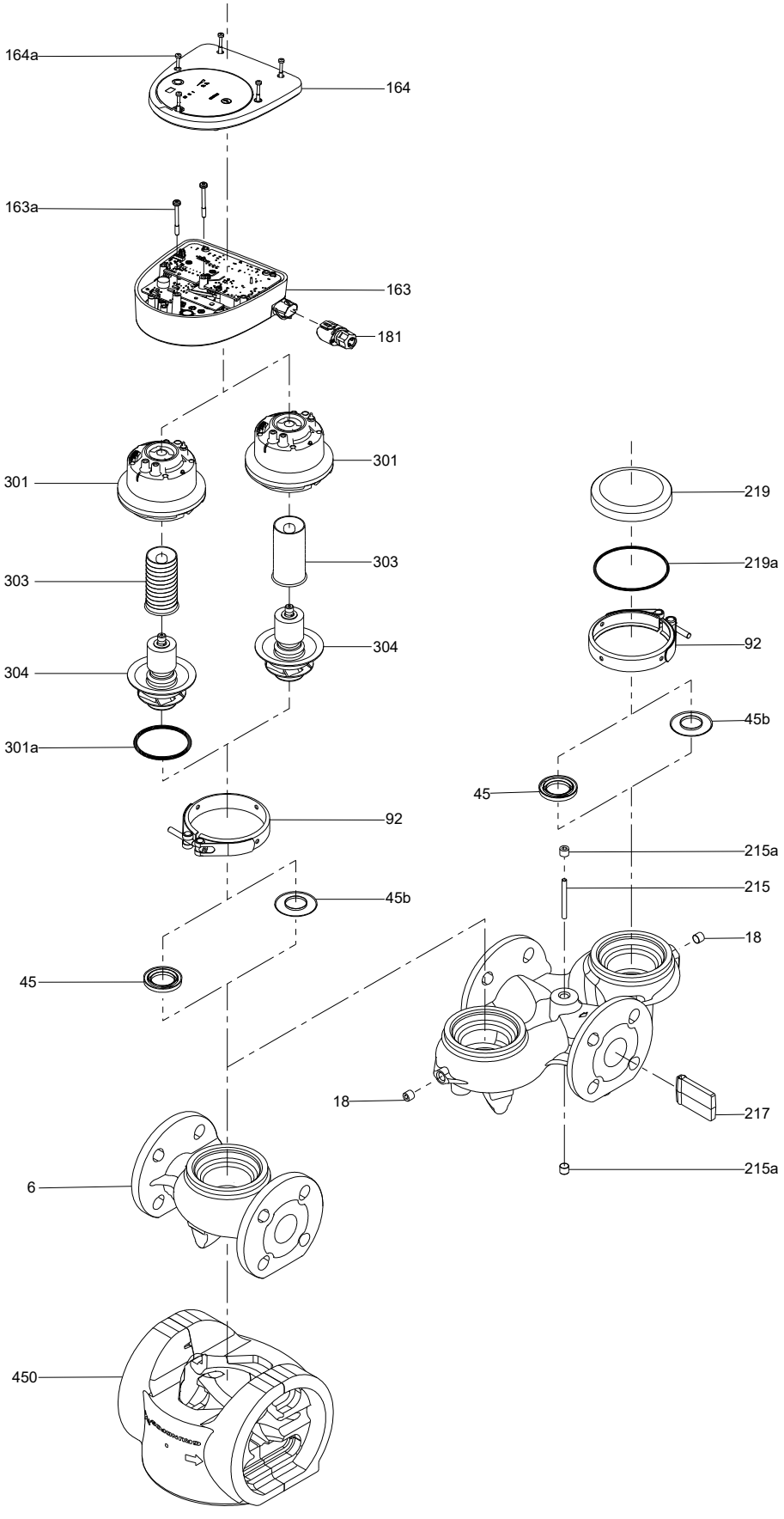

MAGNA1 terminal-connected versions

Kit, control box,unconfigured Model A, B and C

Pos.	Description	750W	1600W
	Kit No	99280445	99280446
163	Control box complete	1	1
163a	Screw	2	2
163d	Screw	1	1
164	Control box cover	1	1
301b	Protector (EMC)	1	1

Kit, control box, configured single-head pumps Model A an B

Pump type	Kit No.	
	PN 6/10	PN 16
MAGNA1 32-120 F (N)	99426869	99426951
MAGNA1 40- 80 F (N)	99426871	-
MAGNA1 40-100 (N)	99426872	-
MAGNA1 50-150 F	-	99426961

Pump type	Kit No.		
	PN 6	PN 6/10	PN 16
MAGNA1 80-60 (N)	-	-	99426969
MAGNA1 80-80 F (N)	-	-	99426970
MAGNA1 80-100 F	99426917	99426921	99426971
MAGNA1 80-120 F	99426918	99426922	99426972
MAGNA1 100-40 F (N)	-	-	99426973
MAGNA1 100-60 (N)	-	-	99426974
MAGNA1 100-80 F	99426933	99426938	99426975
MAGNA1 100-100 F	99426934	99426939	99426976
MAGNA1 100-120 F	99426935	99426940	99427004

Kit, control box, configured single-head pumps Model C

Pump type	Kit No.	
	PN 6/10	PN 16
MAGNA1 40-80 F (N)	99426871	99426952
MAGNA1 40-100 (N)	99426872	99426953
MAGNA1 40-120 (N)	99426883	99426954
MAGNA1 40-150 (N)	99426884	99426955
MAGNA1 40-180 (N)	99426885	99426956
MAGNA1 50-60 (N)	99426891	99426957
MAGNA1 50-80 F (N)	99426892	99426958
MAGNA1 50-100 (N)	99426893	99426959
MAGNA1 50-120 F	99426894	99426960
MAGNA1 50-150 F	99426895	99426961
MAGNA1 50-180 F	99426896	99426962
MAGNA1 65-40 F	99426903	99426963
MAGNA1 65-60 F	99426904	99426964
MAGNA1 65-80 F	99426905	99426965
MAGNA1 65-100 (N)	99426906	99426966
MAGNA1 65-120 (N)	99426907	99426967
MAGNA1 65-150 (N)	99426908	99426968

Pump type	Kit No.		
	PN 6	PN 6/10	PN 16
MAGNA1 80-60 (N)	99426915	99426919	99426969
MAGNA1 80-80 F (N)	99426916	99426920	99426970
MAGNA1 80-100 F	99426917	99426921	99426971
MAGNA1 80-120 F	99426918	99426922	99426972
MAGNA1 100-40 F (N)	99426931	99426936	99426973
MAGNA1 100-60 (N)	99426932	99426937	99426974
MAGNA1 100-80 F	99426933	99426938	99426975
MAGNA1 100-100 F	99426934	99426939	99426976
MAGNA1 100-120 F	99426935	99426940	99427004

Kit, control box cover

Pos.	Model	Model A, B	Model C
	Kit No.	98148728	99280465
164	Control box cover	1	1
164a	Screw	5	5

Kit, control box, configured twin-head pumps PN 6/10, Model A,B

Pump type	Model A, B Head I and head II Kit No.
MAGNA1 D 32-120 F (N)	99426870
MAGNA1 D 40-80 F (N)	99426886
MAGNA1 D 40-100 (N)	99426887
MAGNA1 D 40-120 (N)	99090747
MAGNA1 D 40-150 (N)	99426889
MAGNA1 D 40-180 (N)	99426890
MAGNA1 D 50-40 F (N)	99427005
MAGNA1 D 50-60 (N)	99426897
MAGNA1 D 50-80 F (N)	99426898
MAGNA1 D 50-100 (N)	99426899
MAGNA1 D 50-150 F	99426901
MAGNA1 D 50-180 F	99426902
MAGNA1 D 65-80 F	99090765
MAGNA1 D 65-150 F (N)	99426914

Kit, control box, configured twin-head pumps PN 16, Model A,B

Pump type	Model A, B Head I and head II Kit No.
MAGNA1 D 32-120 F (N)	99426977
MAGNA1 D 40-80 F (N)	99426978
MAGNA1 D 40-100 (N)	99426979
MAGNA1 D 40-120 (N)	99426980
MAGNA1 D 40-150 (N)	99426981
MAGNA1 D 40-180 (N)	99426982
MAGNA1 D 50-40 F (N)	99427008
MAGNA1 D 50-60 (N)	99426983
MAGNA1 D 50-80 F (N)	99426984
MAGNA1 D 50-100 (N)	99426985
MAGNA1 D 50-120 F	99426986
MAGNA1 D 50-150 F	99426987
MAGNA1 D 50-180 F	99426988

Kit, control box, configured twin-head pumps PN 6/10, Model C

Pump type	Model C Kit No.	
	Head I	Head II
MAGNA1 D 40-80 F (N)	99426886	99427011
MAGNA1 D 40-100 (N)	99426887	99427012
MAGNA1 D 40-120 (N)	99426888	99427013
MAGNA1 D 40-150 (N)	99426889	99427014
MAGNA1 D 40-180 (N)	99426890	99427015
MAGNA1 D 50-40 F (N)	99427005	99427073
MAGNA1 D 50-60 (N)	99426897	99427016
MAGNA1 D 50-80 F (N)	99426898	99427017
MAGNA1 D 50-100 (N)	99426899	99427018
MAGNA1 D 50-120 F	99426900	99427019
MAGNA1 D 50-150 F	99426901	99427020
MAGNA1 D 50-180 F	99426902	99427021
MAGNA1 D 65-40 F	99426909	99427022
MAGNA1 D 65-60 F	99426910	99427023
MAGNA1 D 65-80 F	99426911	99427024
MAGNA1 D 65-100 (N)	99426912	99427025
MAGNA1 D 65-120 (N)	99426913	99427026
MAGNA1 D 65-150 (N)	99426914	99427027

Kit, control box, configured twin-head pumps PN 16, Model C

Pump type	Model C Kit No.	
	Head I	Head II
MAGNA1 D 40-80 F (N)	99426978	99427047
MAGNA1 D 40-100 (N)	99426979	99427048
MAGNA1 D 40-120 (N)	99426980	99427049
MAGNA1 D 40-150 (N)	99426981	99427050
MAGNA1 D 40-180 (N)	99426982	99427051
MAGNA1 D 50-40 F (N)	99427008	99427076
MAGNA1 D 50-60 (N)	99426983	99427052
MAGNA1 D 50-80 F (N)	99426984	99427053
MAGNA1 D 50-100 (N)	99426985	99427054
MAGNA1 D 50-120 F	99426986	99427055
MAGNA1 D 50-150 F	99426987	99427056
MAGNA1 D 50-180 F	99426988	99427057
MAGNA1 D 65-40 F	99426989	99427058
MAGNA1 D 65-60 F	99426990	99427059
MAGNA1 D 65-80 F	99426991	99427060
MAGNA1 D 65-100 (N)	99426992	99427061
MAGNA1 D 65-120 (N)	99426993	99427062
MAGNA1 D 65-150 (N)	99426994	99427063

Kit, control box, configured twin-head pumps PN 6, Model C

Pump type	Model C Kit No.	
	Head I	Head II
MAGNA1 D 80-40 F (N)	99427006	99427074
MAGNA1 D 80-60 (N)	99426923	99427028
MAGNA1 D 80-80 F (N)	99426924	99427029
MAGNA1 D 80-100 (N)	99426925	99427030
MAGNA1 D 80-120 F	99426926	99427031
MAGNA1 D 100-40 F	99426941	99427036
MAGNA1 D 100-60 F	99426942	99427037
MAGNA1 D 100-80 F	99426943	99427038
MAGNA1 D 100-100 (N)	99426944	99427039
MAGNA1 D 100-120 (N)	99426945	99427040

Kit, control box, configured twin-head pumps PN 10, Model C

Pump type	Model C Kit No.	
	Head I	Head II
MAGNA1 D 80-40 F (N)	99427007	99427075
MAGNA1 D 80-60 (N)	99426927	99427032
MAGNA1 D 80-80 F (N)	99426928	99427033
MAGNA1 D 80-100 (N)	99426929	99427034
MAGNA1 D 80-120 F	99426930	99427035
MAGNA1 D 100-40 F	99426946	99427041
MAGNA1 D 100-60 F	99426947	99427042
MAGNA1 D 100-80 F	99426948	99427043
MAGNA1 D 100-100 (N)	99426949	99427044
MAGNA1 D 100-120 (N)	99426950	99427045

Kit, control box, configured twin-head pumps PN 16, Model C

Pump type	Model C Kit No.	
	Head I	Head II
MAGNA1 D 80-40 F (N)	99427009	99427077
MAGNA1 D 80-60 (N)	99426995	99427064
MAGNA1 D 80-80 F (N)	99426996	99427065
MAGNA1 D 80-100 (N)	99426997	99427066
MAGNA1 D 80-120 F	99426998	99427067
MAGNA1 D 100-40 F	99426999	99427072
MAGNA1 D 100-60 F	99427000	99427068
MAGNA1 D 100-80 F	99427001	99427069
MAGNA1 D 100-100 (N)	99427002	99427070
MAGNA1 D 100-120 (N)	99427003	99427071

Kit, pump head, model A, B and C Including shaft with impeller and rotor can

Description	Kit No.
DN 32-120	98148737
DN 40-80/100	98148739
DN 40-120/150/180	98148741
DN 50-40/60/80	98148743
DN 50-100	98980689
DN 50-120	98148745
DN 50-150/180	98148747
DN 65-40/60	98148749
DN 65-80/100/120	98148751
DN 65-150	98148753
DN 80-40/60	98148755
DN 80-80/100/120	98148757
DN 100-40/60	98148755

Content

Pos.	Description	Quantity
301	Pump head	1
92	Clamp cpl.	1

Kit, two-way flap Model A, B and C

Description	Kit No.
DN 32	96407253
DN 40	96407254
DN 50	96407255
DN 65	96407256
DN 80	96407257
DN 100	96407258

Content

Pos.	Description	Quantity
215	Guide pin	1
217	Valve flap	1

Spare, clamp

Pos.	Kit No.	98148759
92	Clamp with screw	1

Spare, O-ring Model A, B and C

Pos.	Kit No.	98148761
301a	O-ring	1

Spare, pump housing

Note: pump houses for DN 40, port to port length 220 mm and DN 50, port to port length 240 mm are not available.

Model A, B and C

Pump DN size	Size	Kit No.
MAGNA1 DN32	PN6, PN10, PN16	*98660054*
MAGNA1 DN40	PN6, PN10, PN16	*98660055*
MAGNA1 DN50	PN6, PN10, PN16	*98660056*
MAGNA1 DN65	PN6, PN10, PN16	*98660057*
MAGNA1 DN80	PN6	*98660058*
MAGNA1 DN80	PN10, PN16	*98660059*
MAGNA1 DN100	PN6	*98660060*
MAGNA1 DN100	PN10, PN16	*98660061*
MAGNA1 D DN32	PN6, PN10, PN16	*98660070*
MAGNA1 D DN40	PN6, PN10, PN16	*98660071*
MAGNA1 D DN50	PN6, PN10, PN16	*98660072*
MAGNA1 D DN65	PN6, PN10, PN16	*98660073*
MAGNA1 D DN80	PN6	*98660074*
MAGNA1 D DN80	PN10, PN16	*98660075*
MAGNA1 D DN100	PN6	*98660076*
MAGNA1 D DN100	PN10, PN16	*98660077*

Exploded view for MAGNA1 terminal-connected versions
Model A, B

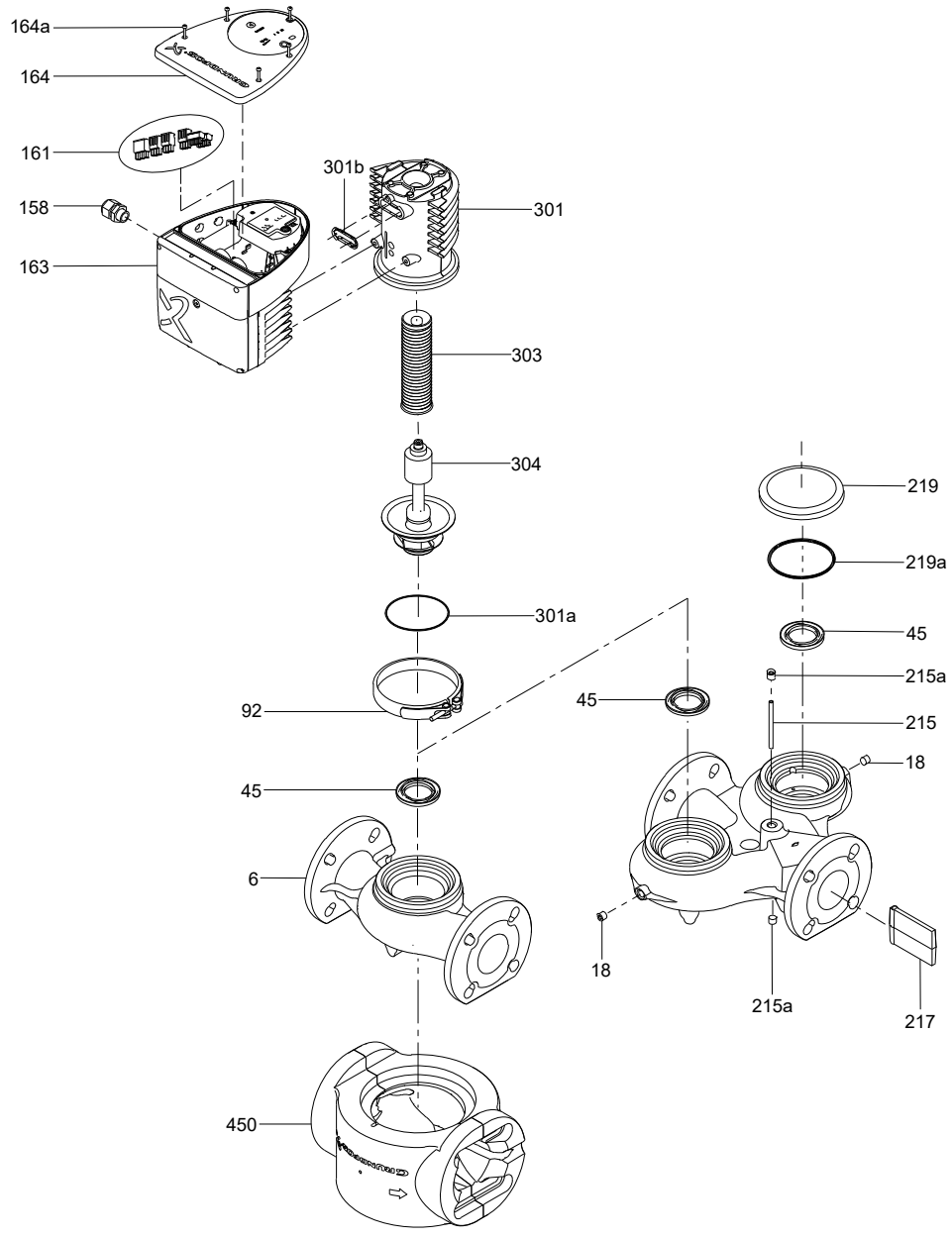

Exploded view for MAGNA1 terminal-connected versions
Model C

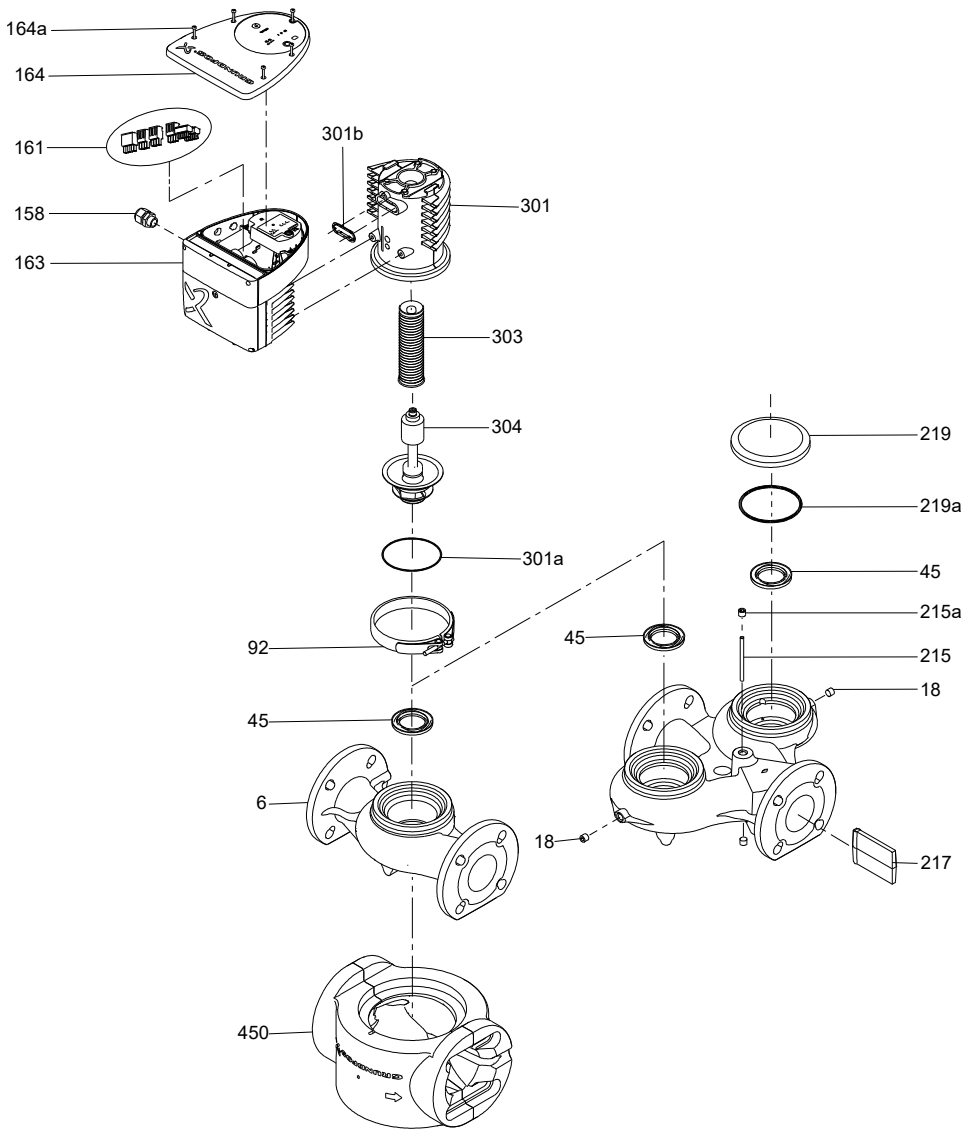

2. MAGNA3, international

Type key

Example	MAGNA3	(D)	80	-120	(F)	(N)	360
Pos.	1	2	3	4	5	6	7

Pos.	Code	Explanation	Designation
1	**MAGNA3**	MAGNA3	Type range
2	**(D)**	Single-head pump Twin-head pump	
3	**80**		Nominal diameter (DN) of inlet and outlet ports [mm]
4	**-120**		Maximum head [dm]
5	**(F)**	Threaded Flange	Pipe connection
6	**(N)**	Cast iron Stainless steel	Pump housing material
7	**360**		Port-to-port length [mm]

MAGNA3 service parts

MAGNA3 plug-connected versions

Kit, connector plug

Pos.	Kit No.	98357861
161	3-Pole connector plug angled	2
	3-pole connector plug up-right	1
	4-pole connector plug angled w/wire	1

Kit, control box, configured single-head pumps Model A, B, C, D and E

Pump type	Kit No.	
	Model A,B and C	Model D and E
MAGNA3 25-40 (N) PN10	99091429	99331450
MAGNA3 25-40 (N) PN16	99091430	99331507
MAGNA3 25-60 (N) PN10	99091431	99331523
MAGNA3 25-60 (N) PN16	99091454	99331532
MAGNA3 25-80 (N) PN10	99091453	99331526
MAGNA3 25-80 (N) PN16	99091459	99331599
MAGNA3 25-100 (N) PN10	99091457	99331595
MAGNA3 25-100 (N) PN16	99091464	99331632
MAGNA3 25-120 (N) PN10	99091462	99331629
MAGNA3 25-120 (N) PN16	99091469	99331650
MAGNA3 32-40 (F) (N) PN10	99091432	99331525
MAGNA3 32-40 (F) (N) PN16	99091456	99331660
MAGNA3 32-60 (F) (N) PN10	99091455	99331547
MAGNA3 32-60 (F) PN16	99091461	99331624
MAGNA3 32-80 (F) (N) PN10	99091458	99331617
MAGNA3 32-80 (F) (N) PN16	99091465	99331644
MAGNA3 32-100 (F) (N) PN10	99091460	99331615
MAGNA3 32-100 (F) (N) PN16	99091468	99331648
MAGNA3 32-120 (N) PN10	99091466	99332321
MAGNA3 32-120 PN16	99091471	99332347
MAGNA3 40-40 F (N) PN10	99091463	99331631
MAGNA3 40-40 F PN16	99091470	99331596
MAGNA3 40-60 F (N) PN10	99091467	99331647
MAGNA3 40-60 F PN16	99091472	99331660

Kit, control box, configured twin-head pumps Model A, B and C

Pump type	Model A,B and C	
	Kit No.	
	Head I	Head II
MAGNA3 D 32-40 (F) PN10	99091473	99805568
MAGNA3 D 32-40 (F) PN16	99091475	99805569
MAGNA3 D 32-60 (F) PN10	99091474	99805570
MAGNA3 D 32-60 (F) PN16	99091479	99805599
MAGNA3 D 32-80 (F) PN10	99091476	99805572
MAGNA3 D 32-80 (F) PN16	99091481	99805601
MAGNA3 D 32-100 (F) PN10	99091478	99805594
MAGNA3 D 32-100 (F) PN16	99091483	99805603
MAGNA3 D 32-100 F PN6/10	99091478	99805602
MAGNA3 D 32-100 F PN16	99091483	99805603
MAGNA3 D 32-120 F PN6/10	99092742	99805604
MAGNA3 D 32-120 F PN16	99092762	99805605
MAGNA3 D 40-40 F PN6/10	99091480	99805606
MAGNA3 D 40-40 F PN16	99091484	99805607

Kit, control box, configured twin-head pumps Model D and E

Pump type	Model D and E	
	Kit No.	
	Head I	Head II
MAGNA3 D 32-40 PN10	99331660	99332174
MAGNA3 D 32-40 PN16	99331675	99332178
MAGNA3 D 32-60 PN10	99331673	99332176
MAGNA3 D 32-60 PN16	99331682	99332277
MAGNA3 D 32-80 PN10	99331678	99332180
MAGNA3 D 32-80 PN16	99332124	99332281
MAGNA3 D 32-100 PN10	99331680	99332197
MAGNA3 D 32-100 PN16	99332126	99332284
MAGNA3 D 32-120 F PN6/10	99332483	99334279
MAGNA3 D 32-120 F PN16	99333708	99334307
MAGNA3 D 40-40 F PN6/10	99331685	99332279
MAGNA3 D 40-40 F PN16	99332127	99332286

Kit, control box, unconfigured Model A, B, C, D and E

Pos.	Kit No.	98148726
162	Box front end	1
163	Box back end	1
530	Cable	1
164	Cover cpl.	1
531	Sensor	1
531a	Sealing cap	1

Kit, cover w. display board (model B, C, D and E)

Pos.	Kit No.	Model B, C and D	Model E
		99032834	92537638
164	Cover	1	1
159a	Cable with plug	1	-
163f	Screw	2	2
164a	Screw	3	3

Kit, display board

Pos.	Kit No.	98148734
501	Display board	1
163b	Compression spring	4

Kit, pump head

All models

Pos.	DN size	DN 25-32	DN 40-40/60
	Kit No.	98419522	98357754
301	Pump head	1	1
92	Clamp cpl.	1	1
301d	Pan head screw	-	2
301c	Leaf spring	-	1

Kit, sensor with cable

Pos.	Kit No.	99313067	99313072
531	Sensor	1	10
530	Cable	1	10
531a	Sealing cap	1	10
534	Bracket	1	-
534a	Screw	1	-

Kit, valve flap with guide pin

Pos.	DN Size	DN 32	DN 40
	Kit No.	96407253	96407254
215	Guide Pin	1	1
217	Valve flap	1	1

Spare, clamp

Pos.	Kit No.	98148760
92	Clamp with screw	1

Spare, insulation shells

Description	Kit No.
DN25/DN32 180	98615808
DN32-100 F 220	98615809
DN40-60 F220	98615810
DN32 220	98159366
DN40 220/250	98159368

Spare, O-ring

Pos.	Kit No.	98357755
301a	O-ring	1

Spare, plug

Pos.	Kit No.	98284561
181	Plug (ALPHA)	1

Spare, pump housing

Model A, B, C, D and E

Pos.	Pump DN size	MAGNA3 DN32
	Size	PN6, PN10, PN16
	Kit No.	98660062
6	Pump housing cpl.	1

Service pump housings are only available for flanged versions.

Spare/Bulk, sealing cap

Pos.	Description	Spare No. (1pc)	Bulk No. (10 pcs)
531a	Sealing cap	98613455	98708139

Exploded view for MAGNA3 plug-connected versions

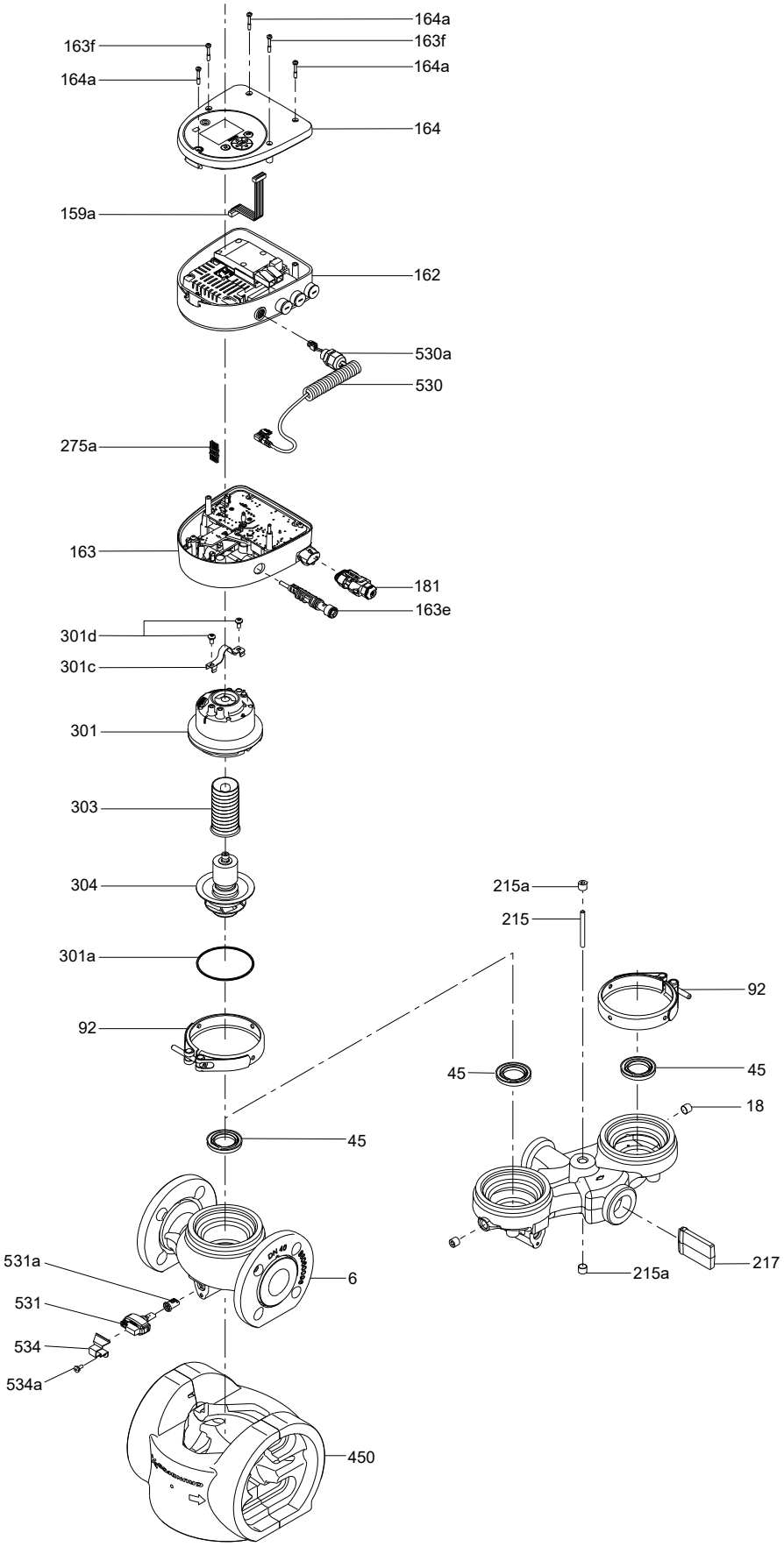

MAGNA3 terminal-connected versions

Kit, connector plug

Pos.	Kit No.	98357861
161	3-Pole connector plug angled	2
	3-pole connector plug up-right	1
	4-pole connector plug angled w/wire	1

Kit, control box, configured single-head pumps

Model A, B, C, D and E

Pump type	Kit No	
	Model A, B, C	Model D and E
MAGNA3 40-80 F (N) PN6/10	99092713	99332331
MAGNA3 40-80 F PN16	99092716	99332346
MAGNA3 40-100 (N) PN6/10	99092714	99332332
MAGNA3 40-100 F PN 16	99092718	99332350
MAGNA3 40-120 (N) PN6/10	99092717	99332348
MAGNA3 40-120 F PN 16	99092723	99332391
MAGNA3 40-150 (N) PN6/10	99092724	99332392
MAGNA3 40-150 F PN 16	99092735	99332463
MAGNA3 40-180 (N) PN6/10	99092732	99332458
MAGNA3 40-180 F PN 16	99092749	99333668
MAGNA3 50-40 F (N) PN6/10	99092715	99332343
MAGNA3 50-40 F PN16	99092719	99332358
MAGNA3 50-60 (N) PN6/10	99092720	99332360
MAGNA3 50-60 F PN 16	99092726	99332435
MAGNA3 50-80 F (N) PN6/10	99092722	99332389
MAGNA3 50-80 F PN16	99092731	99332453
MAGNA3 50-100 (N) PN6/10	99092725	99332433
MAGNA3 50-100 F PN 16	99092736	99332465
MAGNA3 50-120 (N) PN6/10	99092728	99332438
MAGNA3 50-120 F PN 16	99092743	99332484
MAGNA3 50-150 (N) PN6/10	99092739	99332472
MAGNA3 50-150 F PN 16	99092759	99333703
MAGNA3 50-180 (N) PN6/10	99092760	99333704
MAGNA3 50-180 F PN 16	99092772	99333759
MAGNA3 65-40 F (N) PN6/10	99092721	99332386
MAGNA3 65-40 F PN16	99092729	99332441
MAGNA3 65-60 (N) PN6/10	99092727	99332437
MAGNA3 65-60 F PN 16	99092740	99332478
MAGNA3 65-80 F (N) PN6/10	99092733	99332460
MAGNA3 65-80 F PN16	99092750	99333669
MAGNA3 65-100 (N) PN6/10	99092737	99332467
MAGNA3 65-100 F PN 16	99092756	99333689
MAGNA3 65-120 (N) PN6/10	99092746	99333498
MAGNA3 65-120 F PN 16	99092764	99333710
MAGNA3 65-150 (N) PN6/10	99092574	99334811
MAGNA3 65-150 F PN 16	99092582	99334833
MAGNA3 80-40 F (N) PN6	99092730	99332442
MAGNA3 80-40 F (N) PN10	99092734	99332462
MAGNA3 80-40 F PN16	99092745	99333486
MAGNA3 80-60 (N) PN6	99092738	99332469
MAGNA3 80-60 (N) PN10	99092744	99333497
MAGNA3 80-60 F PN 16	99092758	99333692
MAGNA3 80-80 F (N) PN6	99092748	99333664
MAGNA3 80-80 F (N) PN10	99092754	99333686

Pump type	Kit No	
	Model A, B, C	Model D and E
MAGNA3 80-80 F PN16	99092766	99333718
MAGNA3 80-100 F PN6	99092573	99334810
MAGNA3 80-100 F PN10	99092575	99334823
MAGNA3 80-100 F PN16	99092579	99334829
MAGNA3 80-120 F PN6	99092577	99334826
MAGNA3 80-120 F PN10	99092581	99334832
MAGNA3 80-120 F PN16	99092585	99334839
MAGNA3 100-40 F (N) PN6	99092747	99333561
MAGNA3 100-40 F (N) PN10	99092753	99333685
MAGNA3 100-40 F PN16	99092765	99333713
MAGNA3 100-60 (N) PN6	99092757	99333690
MAGNA3 100-60 (N) PN10	99092763	99333708
MAGNA3 100-60 F PN 16	99092771	99333728
MAGNA3 100-80 F PN6	99092576	99334825
MAGNA3 100-80 F PN10	99092578	99334828
MAGNA3 100-80 F PN16	99092584	99334837
MAGNA3 100-100 F PN6	99092580	99334831
MAGNA3 100-100 F PN10	99092583	99334835
MAGNA3 100-100 F PN16	99092587	99334847
MAGNA3 100-120 F PN6	99092586	99334844
MAGNA3 100-120 F PN10	99092588	99334852
MAGNA3 100-120 F PN16	99092589	99334864

Kit, control box, configured twin-head pumps Model A, B, C

Pump type	Kit No. Model A, B, C	
	Head I	Head II
MAGNA3 D 40-80 F (N) PN6/10	99092741	99805610
MAGNA3 D 40-80 F PN16	99092761	99805611
MAGNA3 D 40-100 (N) PN6/10	99092751	99805612
MAGNA3 D 40-100 F PN 16	99092768	99805613
MAGNA3 D 40-120 (N) PN6/10	99092767	99805614
MAGNA3 D 40-120 F PN 16	99092775	99805615
MAGNA3 D 40-150 (N) PN6/10	99092776	99805616
MAGNA3 D 40-150 F PN 16	99092786	99805617
MAGNA3D 40-180 (N) PN6/10	99092755	99805618
MAGNA3 D 40-180 F PN 16	99092798	99805619
MAGNA3 D 50-40 F (N) PN6/10	99092752	99805620
MAGNA3 D 50-40 F PN16	99092769	99805621
MAGNA3 D 50-60 (N) PN6/10	99092770	99805622
MAGNA3 D 50-60 F PN 16	99092778	99805623
MAGNA3 D 50-80 F (N) PN6/10	99092774	99805624
MAGNA3 D 50-80 F PN16	99092783	99805625
MAGNA3 D 50-100 (N) PN6/10	99092777	99805626
MAGNA3 D 50-100 F PN 16	99092787	99805627
MAGNA3 D 50-120 (N) PN6/10	99092780	99805629
MAGNA3 D 50-120 F PN 16	99092792	99805630
MAGNA3 D 50-150 (N) PN6/10	99092790	99805631
MAGNA3 D 50-150 F PN 16	99092805	99805632
MAGNA3 D 50-180 (N) PN6/10	99092806	99805633
MAGNA3 D 50-180 F PN 16	99092812	99805634
MAGNA3 D 65-40 F (N) PN6/10	99092773	99805635
MAGNA3 D 65-40 F PN16	99092781	99805636
MAGNA3 D 65-60 (N) PN6/10	99092779	99805637
MAGNA3 D 65-60 F PN 16	99092791	99805638
MAGNA3 D 65-80 F (N) PN6/10	99092784	99805639
MAGNA3 D 65-80 F PN16	99092799	99805640
MAGNA3 D 65-100 (N) PN6/10	99092788	99805641
MAGNA3 D 65-100 F PN 16	99092802	99805642
MAGNA3 D 65-120 (N) PN6/10	99092795	99805643
MAGNA3 D 65-120 F PN 16	99092808	99805644
MAGNA3 D 65-150 (N) PN6/10	99092591	99805645
MAGNA3 D 65-150 F PN 16	99092599	99805646
MAGNA3 D 80-40 F (N) PN6	99092782	99805647
MAGNA3 D 80-40 F (N) PN10	99092785	99805648
MAGNA3 D 80-40 F PN16	99092794	99805649
MAGNA3 D 80-60 (N) PN6	99092789	99805650
MAGNA3 D 80-60 (N) PN10	99092793	99805651
MAGNA3 D 80-60 F PN 16	99092804	99805652
MAGNA3 D 80-80 F (N) PN6	99092797	99805653
MAGNA3 D 80-80 F (N) PN10	99092801	99805654
MAGNA3 D 80-80 F PN16	99092810	99805655
MAGNA3 D 80-100 F PN6	99092590	99805656
MAGNA3 D 80-100 F PN10	99092592	99805657
MAGNA3 D 80-100 F PN16	99092596	99805658
MAGNA3 D 80-120 F PN6	99092594	99805659
MAGNA3 D 80-120 F PN10	99092598	99805660
MAGNA3 D 80-120 F PN16	99092602	99805661

Pump type	Kit No. Model A, B, C	
	Head I	Head II
MAGNA3 D 100-40 F (N) PN6	99092796	99805662
MAGNA3 D 100-40 F (N) PN10	99092800	99805663
MAGNA3 D 100-40 F PN16	99092809	99805664
MAGNA3 D 100-60 (N) PN6	99092803	99805665
MAGNA3 D 100-60 (N) PN10	99092807	99805666
MAGNA3 D 100-60 F PN 16	99092811	99805667
MAGNA3 D 100-80 F PN6	99092593	99805668
MAGNA3 D 100-80 F PN10	99092595	99805669
MAGNA3 D 100-80 F PN16	99092601	99805670
MAGNA3 D 100-100 F PN6	99092597	99805671
MAGNA3 D 100-100 F PN10	99092600	99805672
MAGNA3 D 100-100 F PN16	99092604	99805673
MAGNA3 D 100-120 F PN6	99092603	99805674
MAGNA3 D 100-120 F PN10	99092605	99805675
MAGNA3 D 100-120 F PN16	99092606	99805676

Kit, control box, configured twin-head pumps Model D and E

Pump type	Kit No. Model D and E Head I	Kit No. Model D and E Head II
MAGNA3 D 40-80 F (N) PN6/10	99332480	99334278
MAGNA3 D 40-80 F PN16	99333706	99334303
MAGNA3 D 40-100 (N) PN6/10	99333670	99334280
MAGNA3 D 40-100 F PN 16	99333722	99334311
MAGNA3 D 40-120 (N) PN6/10	99333721	99334310
MAGNA3 D 40-120 F PN 16	99333764	99334455
MAGNA3 D 40-150 (N) PN6/10	99333765	99334456
MAGNA3 D 40-150 F PN 16	99333795	99334500
MAGNA3D 40-180 (N) PN6/10	99333688	99337036
MAGNA3 D 40-180 F PN 16	99333860	99334529
MAGNA3 D 50-40 F (N) PN6/10	99333672	99334281
MAGNA3 D 50-40 F PN16	99333723	99334323
MAGNA3 D 50-60 (N) PN6/10	99333725	99334450
MAGNA3 D 50-60 F PN 16	99333768	99334462
MAGNA3 D 50-80 F (N) PN6/10	99333763	99334454
MAGNA3 D 50-80 F PN16	99333778	99334480
MAGNA3 D 50-100 (N) PN6/10	99333766	99334457
MAGNA3 D 50-100 F PN 16	99333799	99334502
MAGNA3 D 50-120 (N) PN6/10	99333772	99334474
MAGNA3 D 50-120 F PN 16	99333807	99334519
MAGNA3 D 50-150 (N) PN6/10	99333805	99334513
MAGNA3 D 50-150 F PN 16	99334240	99334771
MAGNA3 D 50-180 (N) PN6/10	99334242	99334784
MAGNA3 D 50-180 F PN 16	99334277	99334806
MAGNA3 D 65-40 F (N) PN6/10	99333761	99334453
MAGNA3 D 65-40 F PN16	99333773	99334476
MAGNA3 D 65-60 (N) PN6/10	99333770	99334460
MAGNA3 D 65-60 F PN 16	99333806	99092791
MAGNA3 D 65-80 F (N) PN6/10	99333781	99334495
MAGNA3 D 65-80 F PN16	99333861	99334531
MAGNA3 D 65-100 (N) PN6/10	99333801	99334505
MAGNA3 D 65-100 F PN 16	99334236	99334545
MAGNA3 D 65-120 (N) PN6/10	99333812	99334526
MAGNA3 D 65-120 F PN 16	99334258	99334789
MAGNA3 D 65-150 (N) PN6/10	99335000	99335052
MAGNA3 D 65-150 F PN 16	99335026	99335080
MAGNA3 D 80-40 F (N) PN6	99333775	99334479
MAGNA3 D 80-40 F (N) PN10	99333793	99334498
MAGNA3 D 80-40 F PN16	99333811	99334524
MAGNA3 D 80-60 (N) PN6	99333803	99334509
MAGNA3 D 80-60 (N) PN10	99333810	99334520
MAGNA3 D 80-60 F PN 16	99334238	99334770
MAGNA3 D 80-80 F (N) PN6	99333859	99334528
MAGNA3 D 80-80 F (N) PN10	99334235	99334543
MAGNA3 D 80-80 F PN16	99334273	99334803
MAGNA3 D 80-100 F PN6	99334867	99335050
MAGNA3 D 80-100 F PN10	99335003	99335064
MAGNA3 D 80-100 F PN16	99335009	99335070
MAGNA3 D 80-120 F PN6	99335007	99335068
MAGNA3 D 80-120 F PN10	99335024	99335078
MAGNA3 D 80-120 F PN16	99335034	99335150

Pump type	Kit No. Model D and E Head I	Kit No. Model D and E Head II
MAGNA3 D 100-40 F (N) PN6	99333855	99334527
MAGNA3 D 100-40 F (N) PN10	99334173	99334532
MAGNA3 D 100-40 F PN16	99334259	99334792
MAGNA3 D 100-60 (N) PN6	99334237	99334546
MAGNA3 D 100-60 (N) PN10	99334253	99334788
MAGNA3 D 100-60 F PN 16	99334276	99334804
MAGNA3 D 100-80 F PN6	99335004	99335066
MAGNA3 D 100-80 F PN10	99335008	99335069
MAGNA3 D 100-80 F PN16	99335029	99335050
MAGNA3 D 100-100 F PN6	99335011	99335073
MAGNA3 D 100-100 F PN10	99335028	99335148
MAGNA3 D 100-100 F PN16	99335040	99335152
MAGNA3 D 100-120 F PN6	99335036	99335151
MAGNA3 D 100-120 F PN10	99335044	99335163
MAGNA3 D 100-120 F PN16	99335045	99335164

Pos.	Kit No.	98148727
164	Control box cover	1
164a	Screw	5

Kit, control box, unconfigured

Pos.	Description/Kit No	750W 98859585	1600W 98859586
-	Control box cpl.	1	1
531	Sensor	1	1
161	Plug cpl.	-	1

Kit, control box cover front end

Pos.	Kit No.	98148727
164	Control box cover	1
164a	Screw	5

Kit, cover w. display board (model B, D and E)

Pos.	Kit No.	99338995
164	Cover	1
501	Display board	1
163b	Compression spring	4
164a	Screw	5

Kit, cover w. display board 200 W BLE (model E)

Pos.	Kit No.	92537638
164	Cover cpl.	1
164a	Screw DELTA PT 40x25/10	3
164a	Screw DELTA PT 40x40/25	2

Kit, cover w. display board ML BLE (model E)

Pos.	Kit No.	92612515
501	Display board cpl.	1
164	Cover	1
164a	Screw	5

Kit, cover w/o display board M/L BLE (model E)

Pos.	Kit No.	92595793
164	Cover	1
164a	Screw	5

Kit, display board

Pos.	Kit No.	98148734
501	Display board cpl.	1
163b	Compression spring	4

Kit, pump head

Description	Kit No/pcs	
Model	A, B, C	D
DN 32-120	98148736	98148737
DN 40-80/100	98148738	98148739
DN 40-120/150/180	98148740	98148741
DN 50-40/60/80	98148742	98148743
DN 50-100	98980702	98980689
DN 50-120	98148744	98148745
DN 50-150/180	98148746	98148747
DN 65-40/60	98148748	98148749
DN 65-80/100/120	98148750	98148751
DN 65-150	98148752	98148753
DN 80-40/60	98148754	98148755
DN 80-80/100/120	98148756	98148757
DN 100-40/60/80/100/120		

Pos.	Description	Model A, B, and C	Model D
92	Clamp cpl.	1	1
301	Pump head	1	1
301b	Protector	1	-
-	Mounting kit	1	-

Kit, sensor with cable

Pos.	Kit No.	99313067	99313072
531	Sensor	1	10
530	Cable	1	10
531a	Sealing cap	1	10
534	Bracket	1	-
534a	Screw	1	-

Kit, two-way flap
Model A

Description	Kit No.
DN 32	96407253
DN 40	96407254
DN 50	96407255
DN 65	96407256
DN 80	96407257
DN 100	96407258

Content

Pos.	Description	Quantity
215	Guide pin	1
217	Valve flap	1

Spare, clamp

Pos.	Kit No.	98148759
92	Clamp with screw	1

Spare, insulation shells

Description	Kit No.
DN32 220	98159366
DN40 220/280	98159368
DN50 240/280	98159367
DN65 340	98159361
DN80 360	98159363
DN100 450	98159362

Spare, O-ring

Pos.	Kit No.	98148761
301a	O-ring	1

Spare, pump housing

Note: pump houses for DN 40, port to port length 220 mm and DN 50, port to port length 240 mm are not available.

Model A, B, C and D

Pump DN size	Size	Kit No.
MAGNA3 DN32	PN6, PN10, PN16	98660062
MAGNA3 DN40	PN6, PN10, PN16	98660063
MAGNA3 DN50	PN6, PN10, PN16	98660064
MAGNA3 DN65	PN6, PN10, PN16	98660065
MAGNA3 DN80	PN6	98660066
MAGNA3 DN80	PN10, PN16	98660067
MAGNA3 DN100	PN6	98660068
MAGNA3 DN100	PN10, PN16	98660069
MAGNA3 D DN32	PN6, PN10, PN16	98660078
MAGNA3 D DN40	PN6, PN10, PN16	98660079
MAGNA3 D DN50	PN6, PN10, PN16	98660080
MAGNA3 D DN65	PN6, PN10, PN16	98660081
MAGNA3 D DN80	PN6	98660082
MAGNA3 D DN80	PN10, PN16	98660083
MAGNA3 D DN100	PN6	98660084
MAGNA3 D DN100	PN10, PN16	98660085

Spare/Bulk, sealing cap

Pos.	Description	Spare No. (1pc)	Bulk No. (10 pcs)	Bulk No. (100 pcs)
531a	Sealing cap	98613455	98708139	98937750

Exploded view for MAGNA3 terminal-connected versions

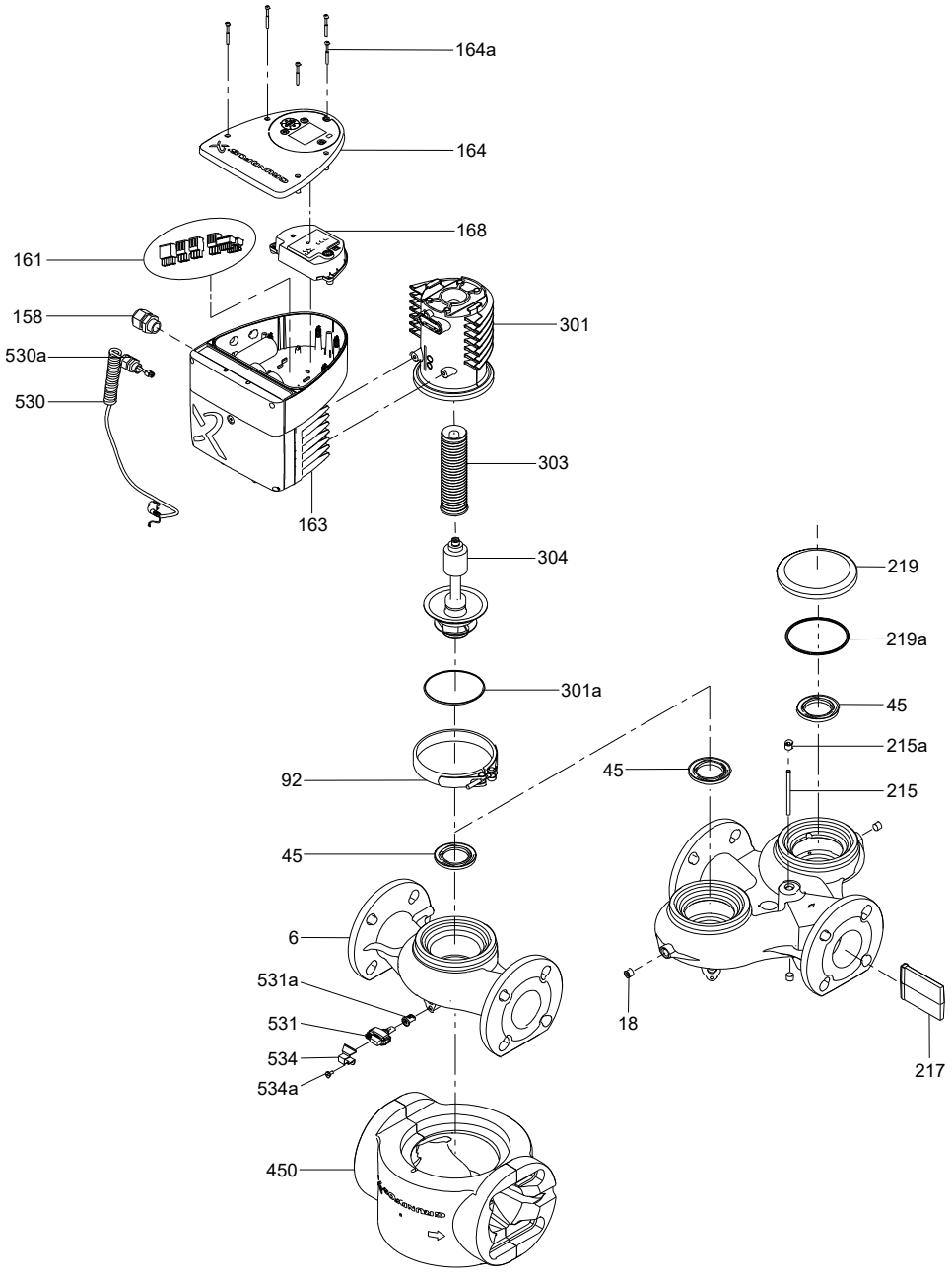

Argentina
Bombas GRUNDFOS de Argentina S.A.
Ruta Panamericana km. 37.500industin
1619 - Garín Pcia. de B.A.
Tel.: +54-3327 414 444
Fax: +54-3327 45 3190

Australia
GRUNDFOS Pumps Pty. Ltd.
P.O. Box 2040
Regency Park
South Australia 5942
Tel.: +61-8-8461-4611
Fax: +61-8-8340-0155

Austria
GRUNDFOS Pumpen Vertrieb Ges.m.b.H.
Grundfosstraße 2
A-5082 Grödig/Salzburg
Tel.: +43-6246-883-0
Fax: +43-6246-883-30

Belgium
N.V. GRUNDFOS Bellux S.A.
Boomsesteenweg 81-83
B-2630 Aartselaar
Tel.: +32-3-870 7300
Fax: +32-3-870 7301

Bosnia and Herzegovina
GRUNDFOS Sarajevo
Zmaja od Bosne 7-7A
BiH-71000 Sarajevo
Tel.: +387 33 592 480
Fax: +387 33 590 465
www.ba.grundfos.com
E-mail: grundfos@bih.net.ba

Brazil
BOMBAS GRUNDFOS DO BRASIL
Av. Humberto de Alencar Castelo Branco, 630
CEP 09850 - 300
São Bernardo do Campo - SP
Tel.: +55-11 4393 5533
Fax: +55-11 4343 5015

Bulgaria
Grundfos Bulgaria EOOD
Slatina District
Iztochna Tangenta street no. 100
BG - 1592 Sofia
Tel.: +359 2 49 22 200
Fax: +359 2 49 22 201
E-mail: bulgaria@grundfos.bg

Canada
GRUNDFOS Canada inc.
2941 Brighton Road
Oakville, Ontario
L6H 6C9
Tel.: +1-905 829 9533
Fax: +1-905 829 9512

China
GRUNDFOS Pumps (Shanghai) Co. Ltd.
10F The Hub, No. 33 Suhong Road
Minhang District
Shanghai 201106 PRC
Tel.: +86 21 612 252 22
Fax: +86 21 612 253 33

Colombia
GRUNDFOS Colombia S.A.S.
Km 1.5 vía Siberia-Cota Conj. Potrero Chico,
Parque Empresarial Arcos de Cota Bod. 1A.
Cota, Cundinamarca
Tel.: +57(1)-2913444
Fax: +57(1)-8764586

Croatia
GRUNDFOS CROATIA d.o.o.
Buzinski prilaz 38, Buzin
HR-10010 Zagreb
Tel.: +385 1 6595 400
Fax: +385 1 6595 499
www.hr.grundfos.com

Czech Republic
GRUNDFOS Sales Czechia and Slovakia s.r.o.
Čajkovského 21
779 00 Olomouc
Tel.: +420-585-716 111

Denmark
GRUNDFOS DK A/S
Martin Bachs Vej 3
DK-8850 Bjerringbro
Tel.: +45-87 50 50 50
Fax: +45-87 50 51 51
E-mail: info_GDK@grundfos.com
www.grundfos.com/DK

Estonia
GRUNDFOS Pumps Eesti OÜ
Peterburi tee 92G
11415 Tallinn
Tel.: + 372 606 1690
Fax: + 372 606 1691

Finland
OY GRUNDFOS Pumput AB
Trukkikuja 1
FI-01360 Vantaa
Tel.: +358-(0) 207 889 500

France
Pompes GRUNDFOS Distribution S.A.
Parc d'Activités de Chesnes
57, rue de Malacombe
F-38290 St. Quentin Fallavier (Lyon)
Tel.: +33-4 74 82 15 15
Fax: +33-4 74 94 10 51

Germany
GRUNDFOS GMBH
Schlüterstr. 33
40699 Erkrath
Tel.: +49-(0) 211 929 69-0
Fax: +49-(0) 211 929 69-3799
E-mail: infoservice@grundfos.de
Service in Deutschland:
kundendienst@grundfos.de

Greece
GRUNDFOS Hellas A.E.B.E.
20th km. Athinon-Markopoulou Av.
P.O. Box 71
GR-19002 Peania
Tel.: +0030-210-66 83 400
Fax: +0030-210-66 46 273

Hong Kong
GRUNDFOS Pumps (Hong Kong) Ltd.
Unit 1, Ground floor, Siu Wai industrial Centre
29-33 Wing Hong Street & 68 King Lam Street, Cheung Sha Wan
Kowloon
Tel.: +852-27861706 / 27861741
Fax: +852-27858664

Hungary
GRUNDFOS South East Europe Kft.
Tópark u. 8
H-2045 Törökbálint
Tel.: +36-23 511 110
Fax: +36-23 511 111

India
GRUNDFOS Pumps India Private Limited
118 Old Mahabalipuram Road
Thoraipakkam
Chennai 600 097
Tel.: +91-44 2496 6800

Indonesia
PT GRUNDFOS Pompa
Graha intirub Lt. 2 & 3
Jln. Cililitan Besar No.454. Makasar, Jakarta Timur
ID-Jakarta 13650
Tel.: +62 21-469-51900
Fax: +62 21-460 6910 / 460 6901

Ireland
GRUNDFOS (Ireland) Ltd.
Unit A, Merrywell Business Park
Ballymount Road Lower
Dublin 12
Tel.: +353-1-4089 800
Fax: +353-1-4089 830

Italy
GRUNDFOS Pompe Italia S.r.l.
Via Gran Sasso 4
I-20060 Truccazzano (Milano)
Tel.: +39-02-95838112
Fax: +39-02-95309290 / 95838461

Japan
GRUNDFOS Pumps K.K.
1-2-3, Shin-Miyakoda, Kita-ku
Hamamatsu
431-2103 Japan
Tel.: +81 53 428 4760
Fax: +81 53 428 5005

Kazakhstan
Grundfos Kazakhstan LLP
7' Kyz-Zhibek Str., Kok-Tobe micr.
KZ-050020 Almaty Kazakhstan
Tel.: +7 (727) 227-98-55/56

Korea
GRUNDFOS Pumps Korea Ltd.
6th Floor, Aju Building 679-5
Yeoksam-dong, Kangnam-ku, 135-916
Seoul, Korea
Tel.: +82-2-5317 600
Fax: +82-2-5633 725

Latvia
SIA GRUNDFOS Pumps Latvia
Deglava biznesa centrs
Augusta Deglava ielā 60
LV-1035, Rīga,
Tel.: + 371 714 9640, 7 149 641
Fax: + 371 914 9646

Lithuania
GRUNDFOS Pumps UAB
Smolensko g. 6
LT-03201 Vilnius
Tel.: + 370 52 395 430
Fax: + 370 52 395 431

Malaysia
GRUNDFOS Pumps Sdn. Bhd.
7 Jalan Peguam U1/25
Glenmarie industrial Park
40150 Shah Alam, Selangor
Tel.: +60-3-5569 2922
Fax: +60-3-5569 2866

Mexico
Bombas GRUNDFOS de México S.A. de C.V.
Boulevard TLC No. 15
Parque industrial Stiva Aeropuerto
Apodaca, N.L. 66600
Tel.: +52-81-8144 4000
Fax: +52-81-8144 4010

Netherlands
GRUNDFOS Netherlands
Veluwezoom 35
1326 AE Almere
Postbus 22015
1302 CA ALMERE
Tel.: +31-88-478 6336
Fax: +31-88-478 6332
E-mail: info_gnl@grundfos.com

New Zealand
GRUNDFOS Pumps NZ Ltd.
17 Beatrice Tinsley Crescent
North Harbour Industrial Estate
Albany, Auckland
Tel.: +64-9-415 3240
Fax: +64-9-415 3250

Norway
GRUNDFOS Pumper A/S
Strømsveien 344
Postboks 235, Leirdal
N-1011 Oslo
Tel.: +47-22 90 47 00
Fax: +47-22 32 21 50

Poland
GRUNDFOS Pompy Sp. z o.o.
ul. Klonowa 23
Baranowo k. Poznania
PL-62-081 Przeźmierowo
Tel.: (+48-61) 650 13 00
Fax: (+48-61) 650 13 50

Portugal
Bombas GRUNDFOS Portugal, S.A.
Rua Calvet de Magalhães, 241
Apartado 1079
P-2770-153 Paço de Arcos
Tel.: +351-21-440 76 00
Fax: +351-21-440 76 90

Romania
GRUNDFOS Pompe România SRL
S-PARK BUSINESS CENTER, Clădirea A2, etaj 2
Str. Tipografilor, Nr. 11-15, Sector 1, Cod 013714
Bucuresti, Romania
Tel.: 004 021 2004 100
E-mail: romania@grundfos.ro

Serbia
Grundfos Srbija d.o.o.
Omladinskih brigada 90b
11070 Novi Beograd
Tel.: +381 11 2258 740
Fax: +381 11 2281 769
www.rs.grundfos.com

Singapore
GRUNDFOS (Singapore) Pte. Ltd.
25 Jalan Tukang
Singapore 619264
Tel.: +65-6681 9688
Faxax: +65-6681 9689

Slovakia
GRUNDFOS s.r.o.
Prievozská 4D 821 09 BRATISLAVA
Tel.: +421 2 5020 1426
sk.grundfos.com

Slovenia
GRUNDFOS LJUBLJANA, d.o.o.
Leskoškova 9e, 1122 Ljubljana
Tel.: +386 (0) 1 568 06 10
Fax: +386 (0)1 568 06 19
E-mail: tehnika-si@grundfos.com

South Africa
GRUNDFOS (PTY) LTD
16 Lascelles Drive, Meadowbrook Estate
1609 Germiston, Johannesburg
Tel.: (+27) 10 248 6000
Fax: (+27) 10 248 6002
E-mail: lgradidge@grundfos.com

Spain
Bombas GRUNDFOS España S.A.
Camino de la Fuentecilla, s/n
E-28110 Algete (Madrid)
Tel.: +34-91-848 8800
Fax: +34-91-628 0465

Sweden
GRUNDFOS AB
Box 333 (Lunnagårdsgatan 6)
431 24 Mölndal
Tel.: +46 31 332 23 000
Fax: +46 31 331 94 60

Switzerland
GRUNDFOS Pumpen AG
Bruggacherstrasse 10
CH-8117 Fällanden/ZH
Tel.: +41-44-806 8111
Fax: +41-44-806 8115

Taiwan
GRUNDFOS Pumps (Taiwan) Ltd.
7 Floor, 219 Min-Chuan Road
Taichung, Taiwan, R.O.C.
Tel.: +886-4-2305 0868
Fax: +886-4-2305 0878

Thailand
GRUNDFOS (Thailand) Ltd.
92 Chaloem Phrakiat Rama 9 Road
Dokmai, Pravej, Bangkok 10250
Tel.: +66-2-725 8999
Fax: +66-2-725 8998

Turkey
GRUNDFOS POMPA San. ve Tic. Ltd. Sti.
Gebze Organize Sanayi Bölgesi
Ihsan dede Caddesi
2. yol 200. Sokak No. 204
41490 Gebze/ Kocaeli
Tel.: +90 - 262-679 7979
Fax: +90 - 262-679 7905
E-mail: satis@grundfos.com

Ukraine
ТОВ "ГРУНДФОС УКРАЇНА"
Бізнес Центр Європа
Столичне шосе, 103
м. Київ, 03131, Україна
Tel.: (+38 044) 237 04 00
Fax: (+38 044) 237 04 01
E-mail: ukraine@grundfos.com

United Arab Emirates
GRUNDFOS Gulf Distribution
P.O. Box 16768
Jebel Ali Free Zone, Dubai
Tel.: +971 4 8815 166
Fax: +971 4 8815 136

United Kingdom
GRUNDFOS Pumps Ltd.
Grovebury Road
Leighton Buzzard/Beds. LU7 4TL
Tel.: +44-1525-850000
Fax: +44-1525-850011

U.S.A.
Global Headquarters for WU
856 Koomey Road
Brookshire, Texas 77423 USA
Phone: +1-630-236-5500

Uzbekistan
Grundfos Tashkent, Uzbekistan
The Representative Office of Grundfos Kazakhstan in Uzbekistan
38a, Oybek street, Tashkent
Tel.: (+998) 71 150 3290 / 71 150 3291
Fax: (+998) 71 150 3292

Trademarks displayed in this material, including but not limited to Grundfos and the Grundfos logo, are registered trademarks owned by The Grundfos Group. © 2025 Grundfos Holding A/S, all rights reserved.

93384059 **04.2025**
ECM: 1419905

GRUNDFOS Holding A/S
Poul Due Jensens Vej 7
DK-8850 Bjerringbro
Tel: +45 87 50 14 00
www.grundfos.com

GRUNDFOS