DP, EF, SL1, SLV

Service Kit Catalogue

GRUNDFOS

Table of contents

1. DP, EF standard and AUTOADAPT 3
Identification. 3
Service parts 5

2. DP, EF 60 Hz 16
Identification. 16
Service parts 17

3. SL1,SLV standard and AUTOADAPT 22
Identification. 22
Service parts 24

4. SL1, SLV 60 Hz 41
Identification. 41
Service parts 42

1. DP, EF standard and AUTO*ADAPT*

Identification

Nameplate

Fix the extra nameplate supplied with the pump at the installation site or keep it in the cover of this manual.

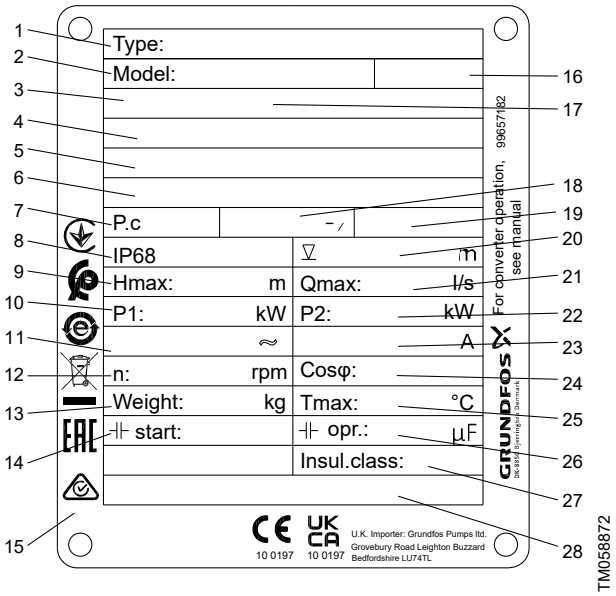

Nameplate

Pos.	Description
1	Type designation
2	Product number
3	Approval
4	ATEX certificate number
5	UKEX certification number
6	IEC Ex certificate number
7	Production code, year and week
8	Enclosure class according to IEC 60529
9	Maximum head [m]
10	Rated input power [kW]
11	Rated voltage
12	Speed [rpm]
13	Net weight [kg]
14	Start capacitor [µF]
15	Room for approval and information logos
16	Safety instructions, publication number
17	Ex description
18	Frequency [Hz]
19	AUTOADAPT Y/N
20	Maximum installation depth [m]
21	Maximum flow rate [l/s]
22	Rated power output [kW]
23	Rated current [A]
24	Cos φ, 1/1 load
25	Maximum liquid temperature [°C]
26	Run capacitor [µF]
27	Insulation class
28	Production site and country

Type keys

The type keys cover the entire ranges of Grundfos DP, EF, SL1, SLV standard and AUTOADAPT wastewater pumps. Each pump can be identified by the type key.

Type key DP10, EF30

Example: DP10.50.15.2.1.502

Code	Description	Explanation
DP	Grundfos drainage pump	Pump type
EF	Grundfos effluent pump	
10	Maximum solids size 10 = 10 mm	Pump passage
50	Nominal outlet diameter 50 = 50 mm	Pump outlet
15	Output power P2 15 = 1.5 kW	Power [kW]
[ ]	Standard	Equipment
[ ]	Standard version	Pump version
Ex	Explosion-proof pump	
2	2-pole	Number of poles
1	Single-phase motor	Number of phases
[ ]	Three-phase motor	
5	50 Hz	Frequency [Hz] 1)
02	230 V, DOL	Voltage and starting method
0B	400-415 V, DOL	
0C	230-240 V, DOL	
[ ]	1st generation	Generation 2)
A	2nd generation	
B	3rd generation	
[ ]	Standard	Pump material
Z	Custom-built products	Customisation

1) Maximum frequency in case of frequency converter operation.

2) The pumps in the individual generations differ in design but are similar in terms of power rating.

Type key DP10, EF30

Example: DP.10.50.15.E.Ex.2.1.5.02

Code	Description	Explanation
DP	Grundfos drainage pump	Pump type
EF	Grundfos effluent pump	
10	Maximum solids size 10 = 10 mm	Pump passage
50	Nominal diameter of the pump outlet port 50 = 50 mm	Pump outlet
15	Output power P2 15 = 1.5 kW	Power [kW]
E	AUTOADAPT version	Equipment
[ ]	Standard version	Pump version
Ex	Explosion-proof pump	
2	2-pole	Number of poles
1	Single-phase motor	Number of phases
[ ]	Three-phase motor	
5	50 Hz	Frequency [Hz]
02	230 V, DOL	Voltage code and starting method
0B	400-415 V, DOL	
[ ]	1st generation	Generation 1)
A	2nd generation	
B	3rd generation	
[ ]	Standard	Pump material
Z	Custom-built products	Customisation

1) The pumps in the individual generations differ in design but are similar in terms of power rating.

Service parts

DP, EF standard

50/60 Hz

Kit, bearing

Pos.	Description	Frame	A	B/C
		Kit No.	*98682345*	*96690707*
153	Bearing		1	1
154	Bearing		1	1

Kit, guide shoe

Pos.	Description	DN 65		DN 65/80	
		NBR	FKM	NBR	FKM
	Kit No.	*96692327*	*96692330*	*96692331*	*96692332*
-	Rubber seal for guide shoe	1	1	1	1
-	Guide shoe	1	1	1	1

Kit, impeller

Pos.	Description	EF				DP		
		0.6 kW	0.9 kW	1.1 kW	1.5 kW	0.9 kW	1.5 kW	2.6 kW
		96115101	*96115109*	*96115102*	*96115103*	*96115104*	*96115105*	*96115106*
9a	Key	1	1	1	1	1	1	1
49	Impeller	1	1	1	1	1	1	1
66	Wedge lock washer	2	-	-	-	-	-	-
188a	Screw	1	1	1	1	1	1	1

Kit, lifting bracket

Pos.	Description	Frame	A	B/C
		Kit No.	*96690420*	*96690428*
188a	Screw		1	2
190	Lifting bracket		1	1

Kit, O-ring

Pos.	Description	0.6 - 1.5 kW		2.6 kW	
		NBR	FKM	NBR	FKM
	Kit No.	*96115107*	*96646049*	*96115108*	*96646060*
26a	O-ring	1	1	1	1
37	O-ring	1	1	1	2
37a	O-ring	2	2	2	2
102	O-ring	1	1	1	1
107	O-ring	1	1	1	1
159	O-ring	2	1	1	1
185	O-ring	1	-	1	-
187	O-ring	1	-	1	-
194	Sealing washer	2	2	2	2
198	O-ring	1	1	2	1
37b	O-ring	2	2	1	-
108	O-ring	1	1	-	2
153b	O-ring	1	1	1	1

Kit, shaft seal

Pos.	Description	0.9-1.5 kW		2.6 kW	
		BQQP	BQQV	BQQP	BQQV
	Kit No.	*96106536*	*96645161*	*96076123*	*96645275*
9a	Key	1	1	1	1
58	Shaft seal retainer	1	1	-	-
58a	Screw	1	1	1	1
37	O-ring	-	-	1	1
66	Wedge lock washer	1	1	1	1
102	O-ring	1	1	1	1
103	Bush	1	1	-	-
104	Seal ring	1	1	-	-
105	Shaft seal cartridge	1	1	1	1
106	O-ring	-	-	2	2
107	O-ring	2	2	1	1
112a	Retaining ring	-	-	1	1
153a	Retaining ring	-	-	1	1
194	Seal washer	2	2	2	2

Spare, cable

Pos.	Description	Length	10		15		20		25	
		Type	Standard	Ex	Standard	Ex	Standard	Ex	Standard	Ex
181	Cable		*96591649*	*96689976*	*96659473*	*96689977*	*96591660*	*96689978*	*96689953*	*96689979*

Spare, clamp

Pos.	Description	Frame A	Frame B/C
92	Kit No.	*96592050*	*96592054*

Spare, SmartSeal

Pos.	Description	DN 65		DN 65/80	
	Rubber type	NBR	FKM	NBR	FKM
	Kit No	*96575022*	*96659160*	*96575023*	*96659161*
-	SmartSeal for guide shoe	1	1	1	1

Spare, sphere for hook-up

Pos.	Description	DN 50/Rp 2
	Rubber type	FKM
	Kit No.	*96657778*
-	Sphere for hook-up	1

Spare, upper guide rail holder

Pos.	Description	DN 65/80
	Kit No.	*96592037*
-	Upper guide rail holder	1

Exploded view for DP 0.9, 1.5 kW

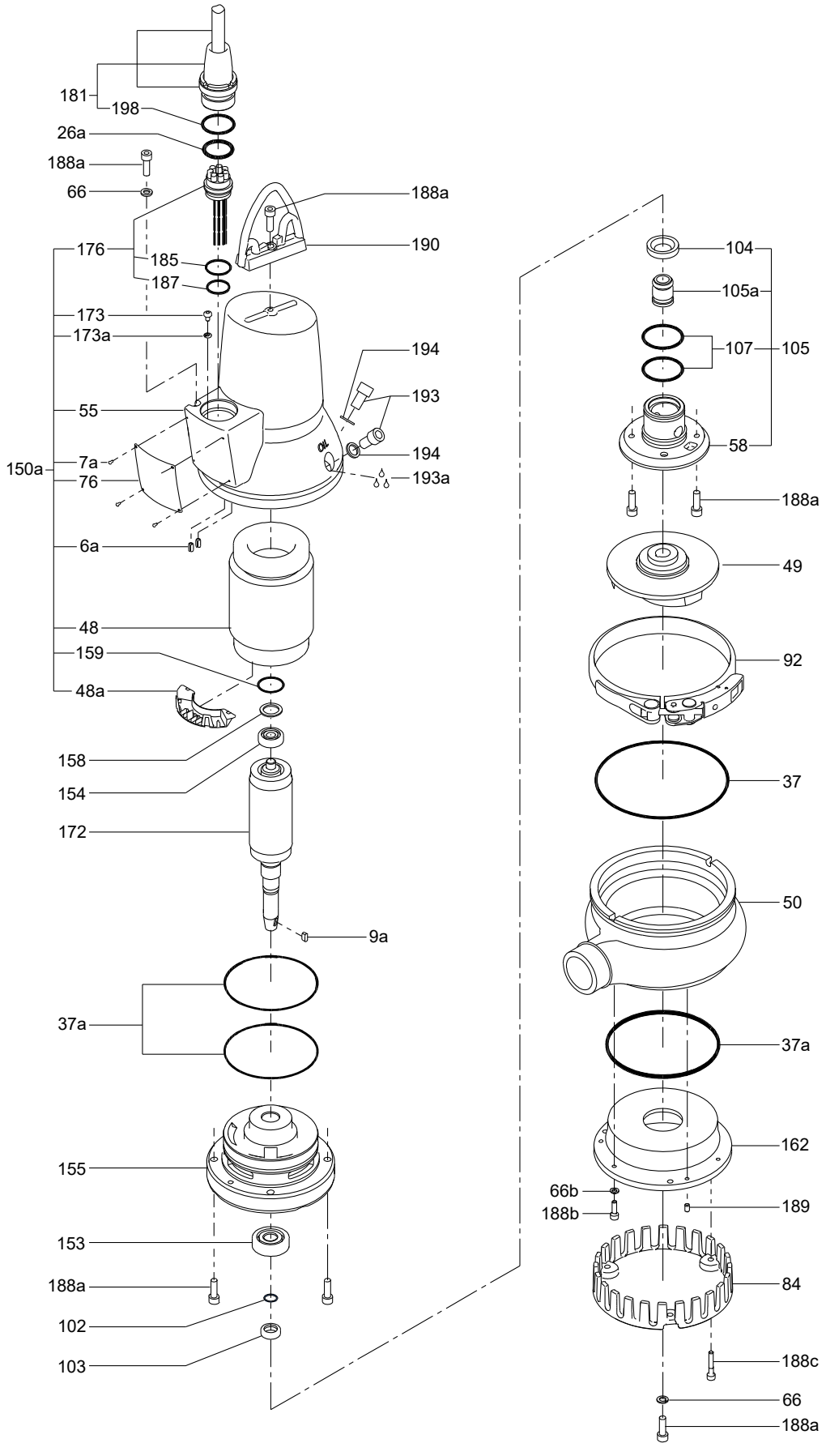

Exploded view for DP 2.6 kW

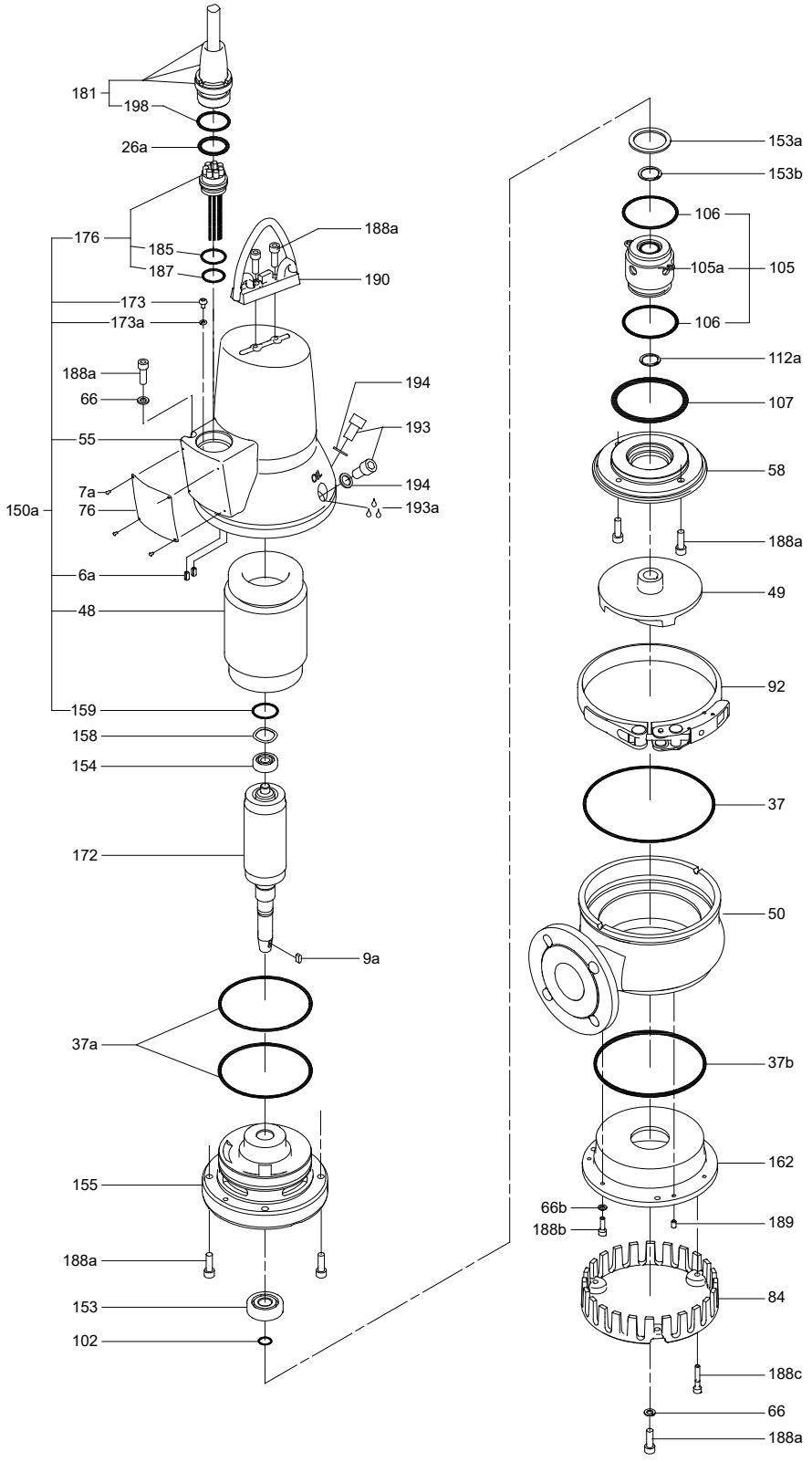

Exploded view for EF

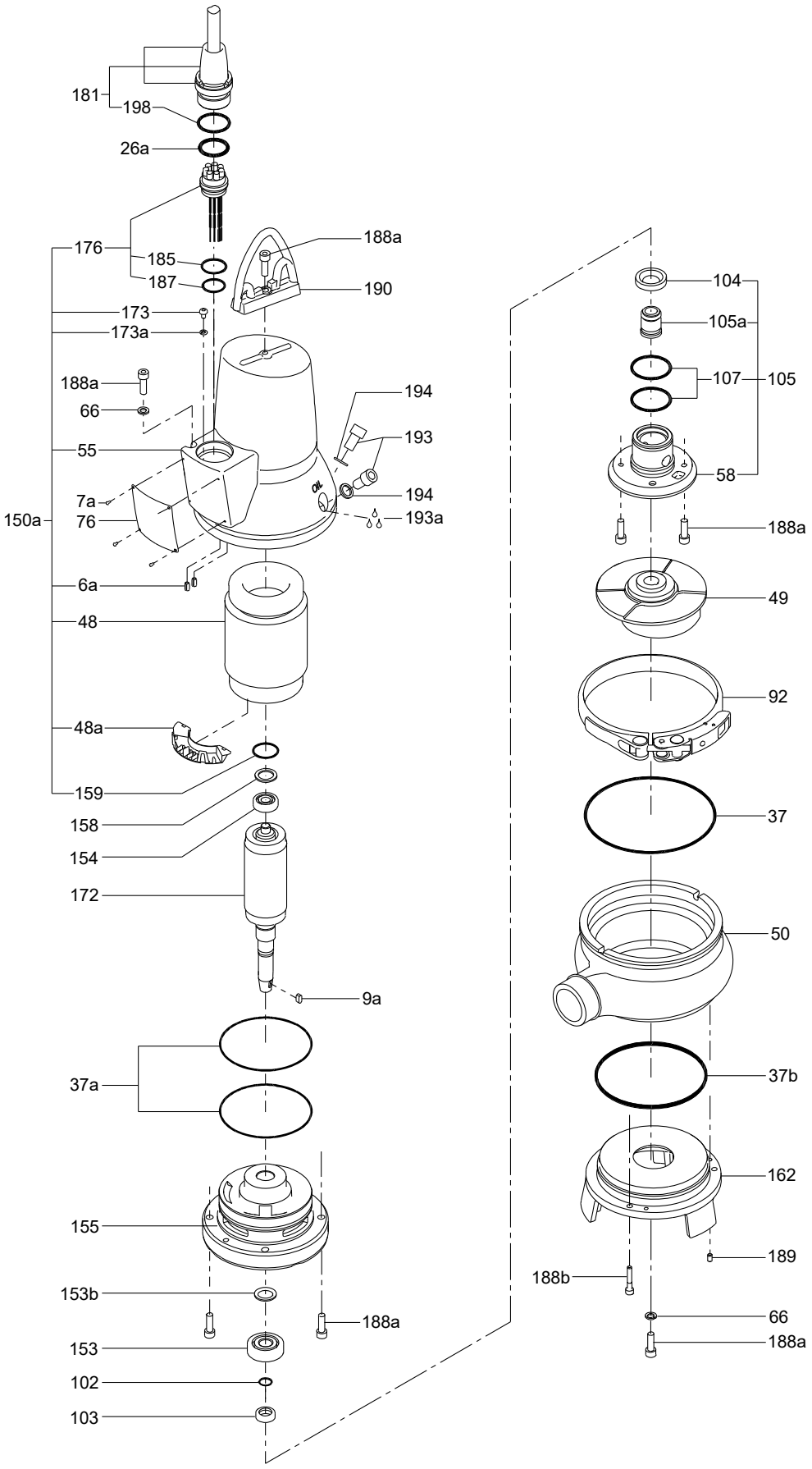

DP, EF AUTO$_{ADAPT}$

50 Hz

Kit, bearing

Pos.	Description	Type	0.6-1.5 kW	2.6 kW
		Kit No.	98682345	96690707
153	Bearing		1	1
154	Bearing		1	1

Kit, dry-running sensor

Pos.	Description	Type	Standard	Ex
		Kit No.	96898083	96984131
90b	O-ring		2	2
285	Dry-running sensor		1	1
285a	O-ring		1	1
285b	Set screw for sensor housing		1	1

Kit, electronic controller

Pos.	Description	Type	Standard 1-phase	Ex 1-phase	Standard 3-phase	Ex 3-phase
		2-pole	0.6-1.1 kW	0.6-1.1 kW	0.6-4 kW	0.6-4 kW
		Kit No.	96898085	99672003	96898086	99672005
26a	O-ring 32 x 4		1	1	1	1
90a	Elecronic unit		1	1	1	1
90b	O-ring 180 x 4		1	1	1	1
198	O-ring 34 x 3		1	1	1	1
287b	O-ring 20 x 3		1	1	1	1
287c	Screw for sensor housing		1	-	1	-
-	Cable tie		1	1	1	1
-	Splice		-	4	-	3

Kit, guide shoe

Pos.	Description	Outlet	Rp 2"	DN 65		DN 65/80	
		Rubber type	NBR	NBR	FKM	NBR	FKM
		Kit No.	97771479	96692327	96692330	96692331	96692332
-	Rubber seal for guide shoe		1	1	1	1	1
-	Guide shoe		1	1	1	1	1

Kit, impeller

Pos.	Description	EF				DP		
		0.6 kW	0.9 kW	1.1 kW	1.5 kW	0.9 kW	1.5 kW	2.6 kW
	Kit No.	96115101	96115109	96115102	96115103	96115104	96115105	96115106
9a	Key	1	1	1	1	1	1	1
49	Impeller	1	1	1	1	1	1	1
66	Wedge lock washer	2	-	-	-	-	-	
188a	Screw	1	1	1	1	1	1	1

Kit, level sensor

Pos.	Description	Type	Standard	Ex
		Kit No.	96898082	96984130
90b	O-ring		1	1
287	Level sensor		1	1
287b	O-ring		1	1
287c	Set screw for sensor housing		1	1

Kit, lifting bracket

Pos.	Description	Type	0.6-1.5 kW	2.6 kW
		Kit No.	96690420	96690428
188a	Screw		1	2
190	Lifting bracket		1	1

Kit, O-ring

Pos.	Description	0.6 - 1.5 kW		2.6 kW	
		NBR	FKM	NBR	FKM
	Kit No.	96115107	96646049	96115108	96646060
26a	O-ring	1	1	1	1
37	O-ring	1	1	1	2
37a	O-ring	2	2	2	2
102	O-ring	1	1	1	1

Pos.	Description	0.6 - 1.5 kW		2.6 kW	
		NBR	FKM	NBR	FKM
	Kit No.	96115107	96646049	96115108	96646060
107	O-ring	1	1	1	1
159	O-ring	2	1	1	1
185	O-ring	1	-	1	-
187	O-ring	1	-	1	-
194	Sealing washer	2	2	2	2
198	O-ring	1	1	2	1
37b	O-ring	2	2	1	-
108	O-ring	1	1	-	2
153b	O-ring	1	1	1	1

Kit, power plug

Pos.	Description	Type	Standard & Ex
		Kit No.	96984144
26a	Retaining ring		1
90b	O-ring		1
176	Cable with connect cpl.		1
198	O-ring		1

Kit, run capacitor

Pos.	Description	Kit No.	96898084
90b	O-ring 180 x 4		1
161c	Capacitor cpl.		1

Kit, PT1000 with bracket

Pos.	Description	Type	Standard 3-ph. & Ex
		Kit No.	97698437
161b	PT1000 sensor with bracket		1
90b	O-ring		1

Kit, shaft seal

Pos.	Description	0.9-1.5 kW		2.6 kW	
		BQQP	BQQV	BQQP	BQQV
	Kit No.	96106536	96645161	96076123	96645275
9a	Key	1	1	1	1
58	Shaft seal retainer	1	1	-	-
58a	Screw	1	1	1	1
37	O-ring	-	-	1	1
66	Wedge lock washer	1	1	1	1
102	O-ring	1	1	1	1
103	Bush	1	1	-	-
104	Seal ring	1	1	-	-
105	Shaft seal cartridge	1	1	1	1
106	O-ring	-	-	2	2
107	O-ring	2	2	1	1
112a	Retaining ring	-	-	1	1
153a	Retaining ring	-	-	1	1
194	Seal washer	2	2	2	2

Spare, cable

Pos.	Description	Length	10		15		20		25	
		Type	Standard	Ex	Standard	Ex	Standard	Ex	Standard	Ex
181	Cable		96591649	96689976	96659473	96689977	96591660	96689978	96689953	96689979

Spare, clamp

Pos.	Type	0.6-1.5 kW	2.6 kW
92	Kit No.	96592050	96592054

Spare, smartSeal

Pos.	Description	Rp 2"/NPT 2"	DN 65		DN 65/80	
	Rubber type	NBR	NBR	FKM	NBR	FKM
	Kit No.	*97771488*	*96575022*	*96659160*	*96575023*	*96659161*
-	SmartSeal for guide shoe	1	1	1	1	1

Spare, sphere for hook-up

Pos.	Description	DN 50/Rp 2"
	Rubber type	FKM
	Kit No.	*96657778*
-	Sphere for hook-up	1

Spare, upper guide rail holder

Pos.	Description	DN 40/Rp 2"	DN 65/80
	Kit No.	*96829356*	*96592037*
-	Upper guide rail holder	1	1

Exploded view for DP 0.9 - 1.5 kW

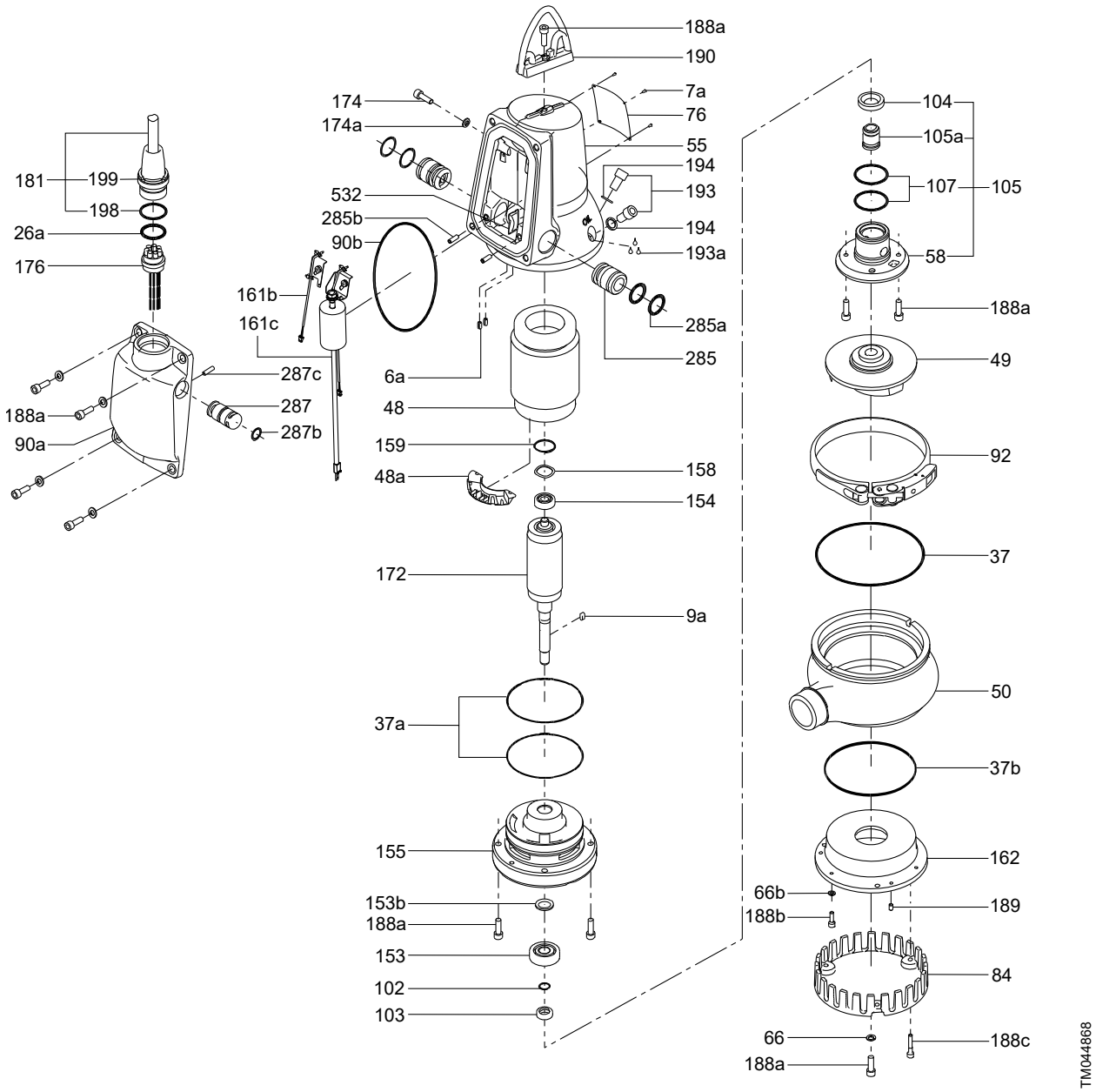

Exploded view for DP 2.6 kW

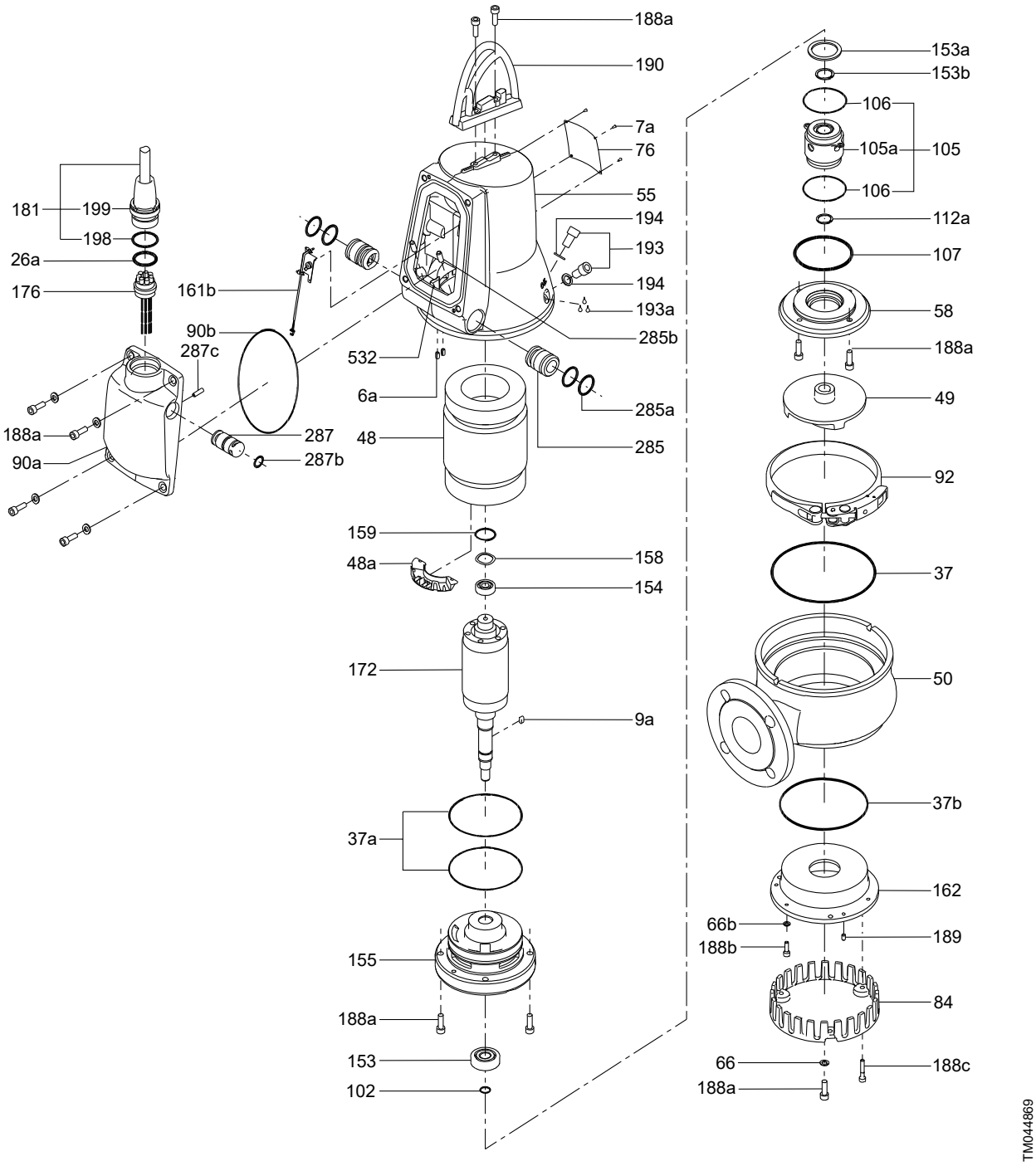

Exploded view for EF 0.6 - 1.5 kW

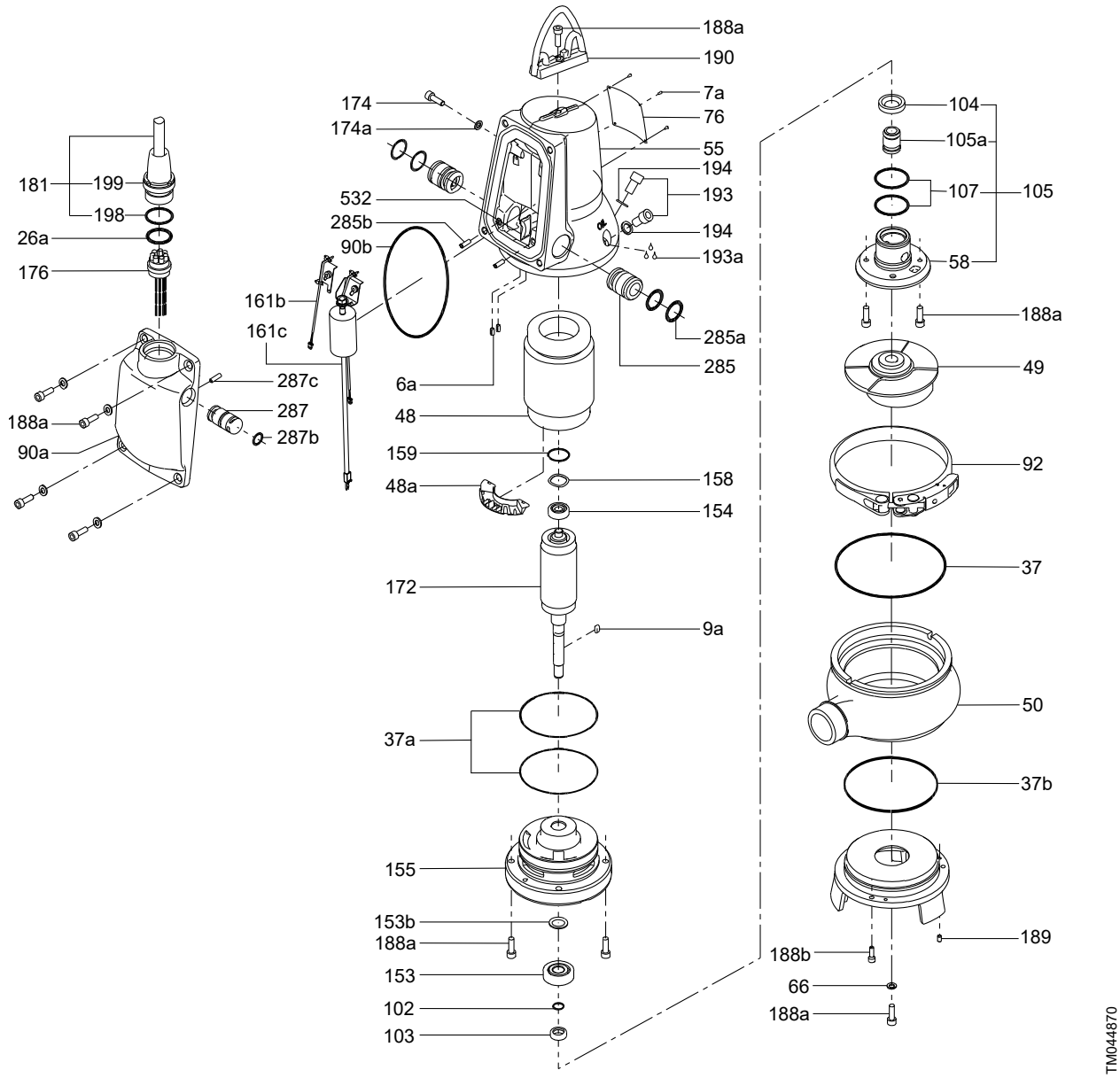

2. DP, EF 60 Hz

Identification

Nameplate

Fix the extra nameplate supplied with the pump at the installation site or keep it in the cover of this manual.

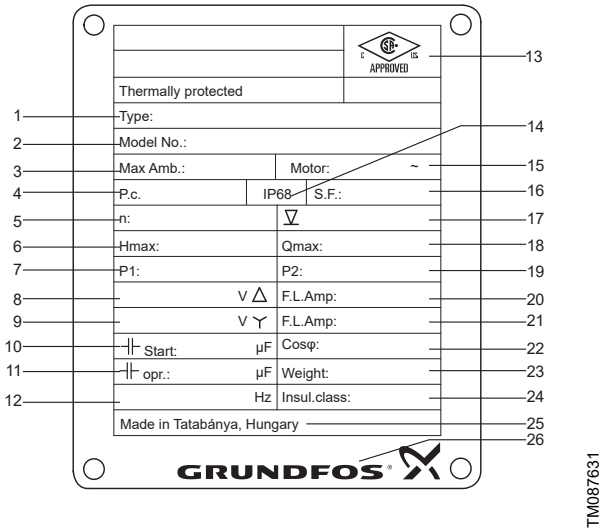

DP, EF, SL1 and SLV pumps

Pos.	Description	Pos.	Description
1	Type designation	14	Enclosure class
2	Product number + serial number	15	Number of phases
3	Max. ambient/liquid temperature [K]	16	Motor safety factor
4	Production code (YYWW)	17	Max installation depth [ft]
5	Speed [rpm]	18	Max flow rate [USgpm]
6	Rated max head [ft]	19	Nominal power output P2 [hp]
7	Nominal power input P1 [hp]	20	Rated current delta connection [A]
8	Rated voltage, delta connection [V]	21	Rated voltage, star connection [A]
9	Rated voltage, star connection [V]	22	Cos Φ, 1/1 load
10	Start capacitor [µF]	23	Net weight [lbs]
11	Run capacitor [µF]	24	Insulation class
12	Frequency [Hz]	25	Production site and country
13	cCSAus approval	26	Grundfos logo

Type keys

The type keys cover the entire ranges of Grundfos DP, EF, SL1, SLV ANSI 60 Hz wastewater pumps.

DP and EF

Example: DP04.A20.20.2.60M

Code	Description	Explanation
DP	Grundfos drainage pump	Pump type
EF	Grundfos effluent pump	
04	Maximum spherical impeller clearance [04=0.4 inch]	Impeller clearance
A20	Nominal diameter of outlet port/10 [inch]	Pump outlet
20	Rated output power/10 [hp]	Outlet power
2	2-pole motor	Number of poles
1	Single-phase motor	Number of phases
[ ]	Three-phase motor	
6	60 Hz	Frequency[1)]
03	208-230 V, DOL	Voltage code and starting method
0M	200-230 V, DOL	
0H	460 V, DOL	
0L	3 x 575 V, DOL	
Z	Custom-built products	Customization

Service parts

DP, EF 60 Hz

Kit, bearing

Pos.	Frame	A
	Kit No.	98682345
153	Ball bearing	1
154	Ball bearing	1

Kit, impeller

Pos.	Pump type	DP		EF	
	Output power [hp]	1.5	2	1.5	2
	Kit No.	93229598	96115104	96115101	96115109
9a	Key	1	1	1	1
49	Impeller	1	1	1	1
66	Wedge lock washer	1	-	1	-
188a	Hex socket head cap screw	1	1	1	1

Kit, Moisture switch

Pos.	Kit No.	99309996
520	Moisture switch	1
-	Insulation shell	1
890	Connector	2
-	Cable tie	1

Kit, O-ring

Pos.	Rubber material	NBR
	Kit No.	93211934
37a	O-ring D114x3	2
37	O-ring D164,5x3,0	1
37b	O-ring D86x4,1	1
37b	O-Ring 135,0X4,0	1
102	O-ring D19x1,5	1

Kit, shaft seal

Pos.	Material	BQQP
	Kit No.	96106536
9a	Key	1
188a	Hex socket head cap screw	1
66	Wedge lock washer	1
102	O-ring	1
103	Bush	1
105	Shaft seal	1
194	Seal washer	2

Spare, cable

Pos.	Kit No.	97634728
181	Cable, 10m	1

Spare, volute

Pos.	Description	DP04/EF12.A20.15/20 ANSI
	Kit No.	93231345
50	Pump housing	1

Exploded view for DP, 208-230 V

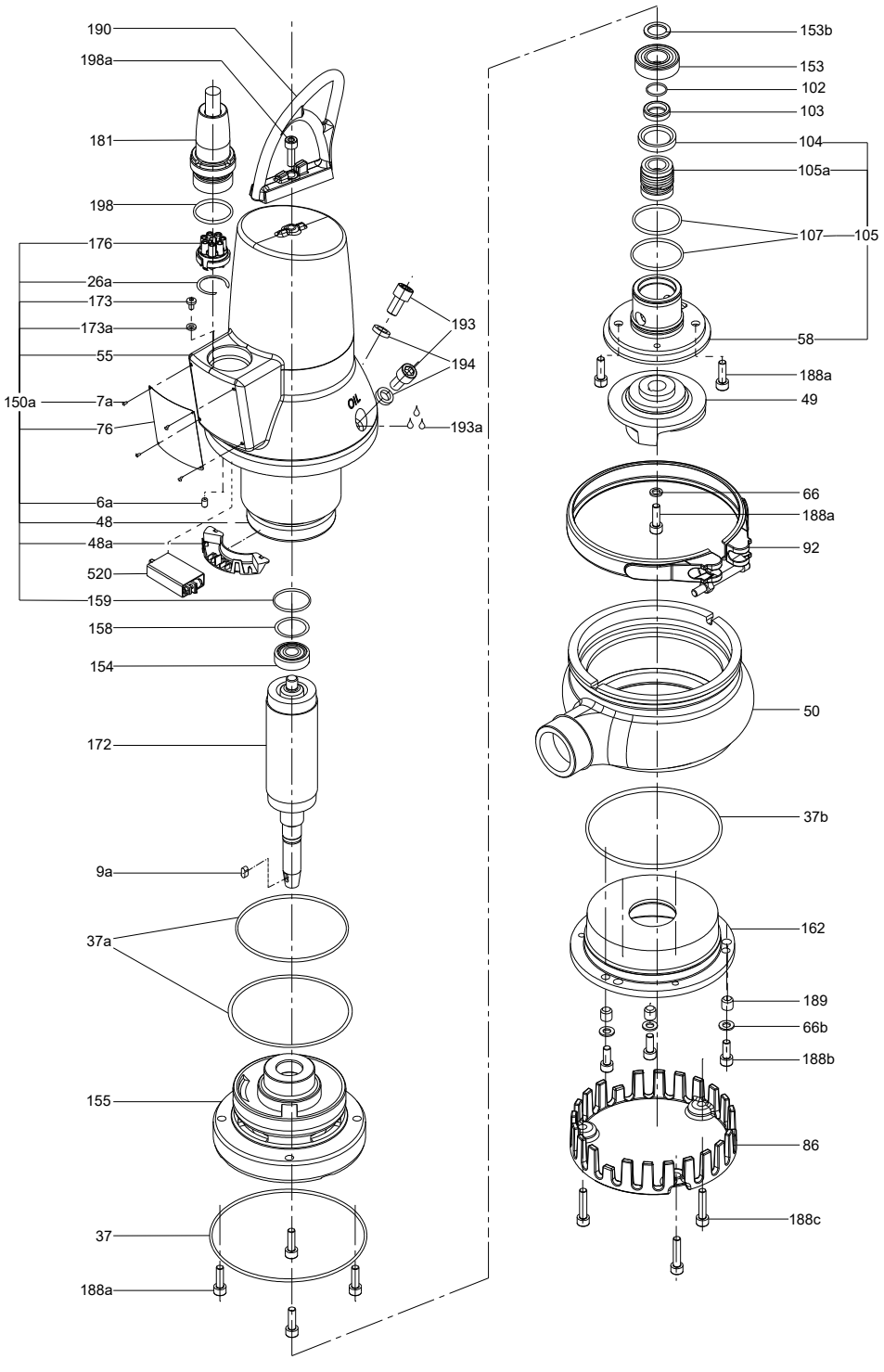

Exploded view for DP, 200-230 V, 460 V, 3 x 575 V

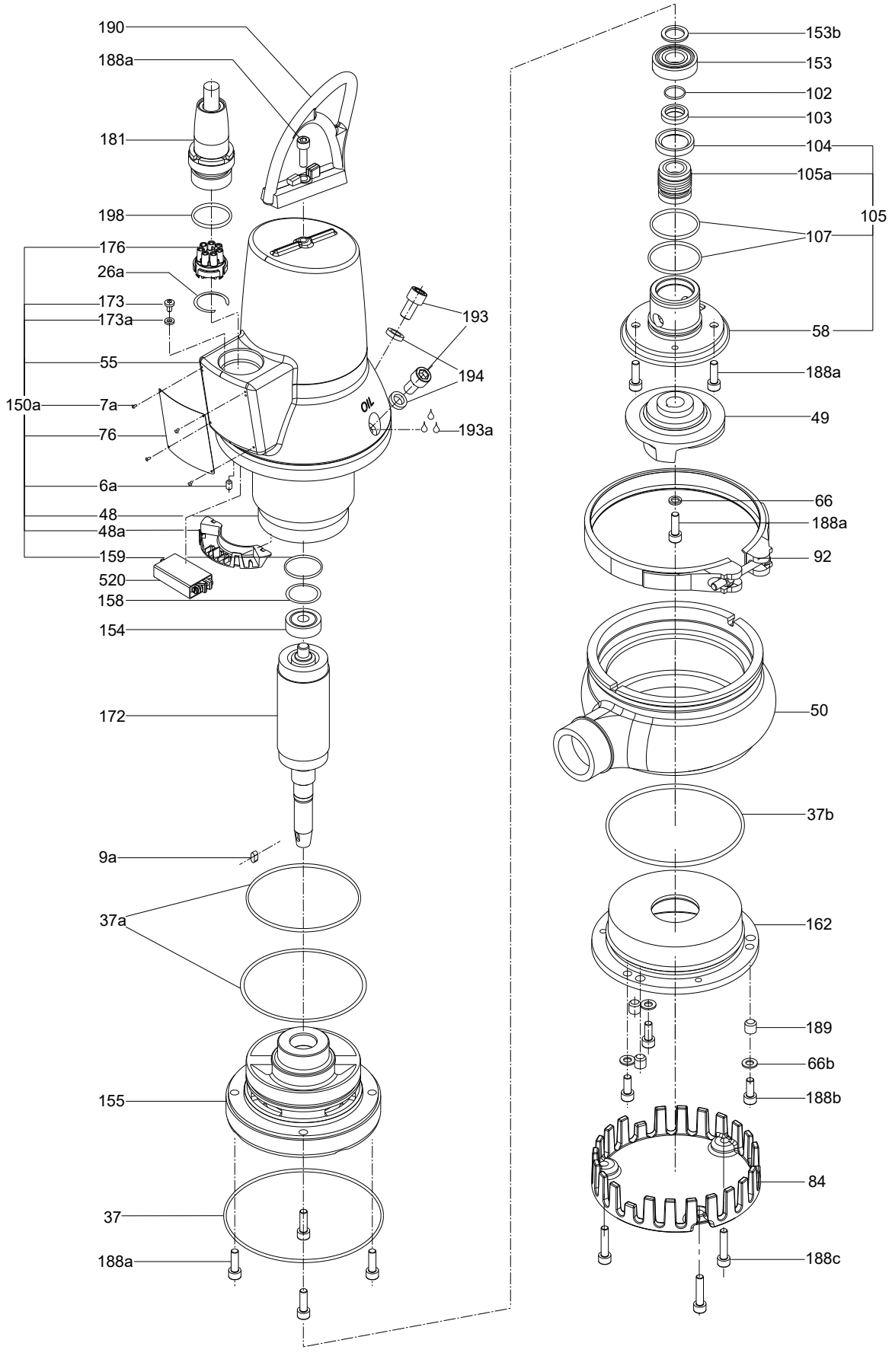

Exploded view for EF, 208-230 V

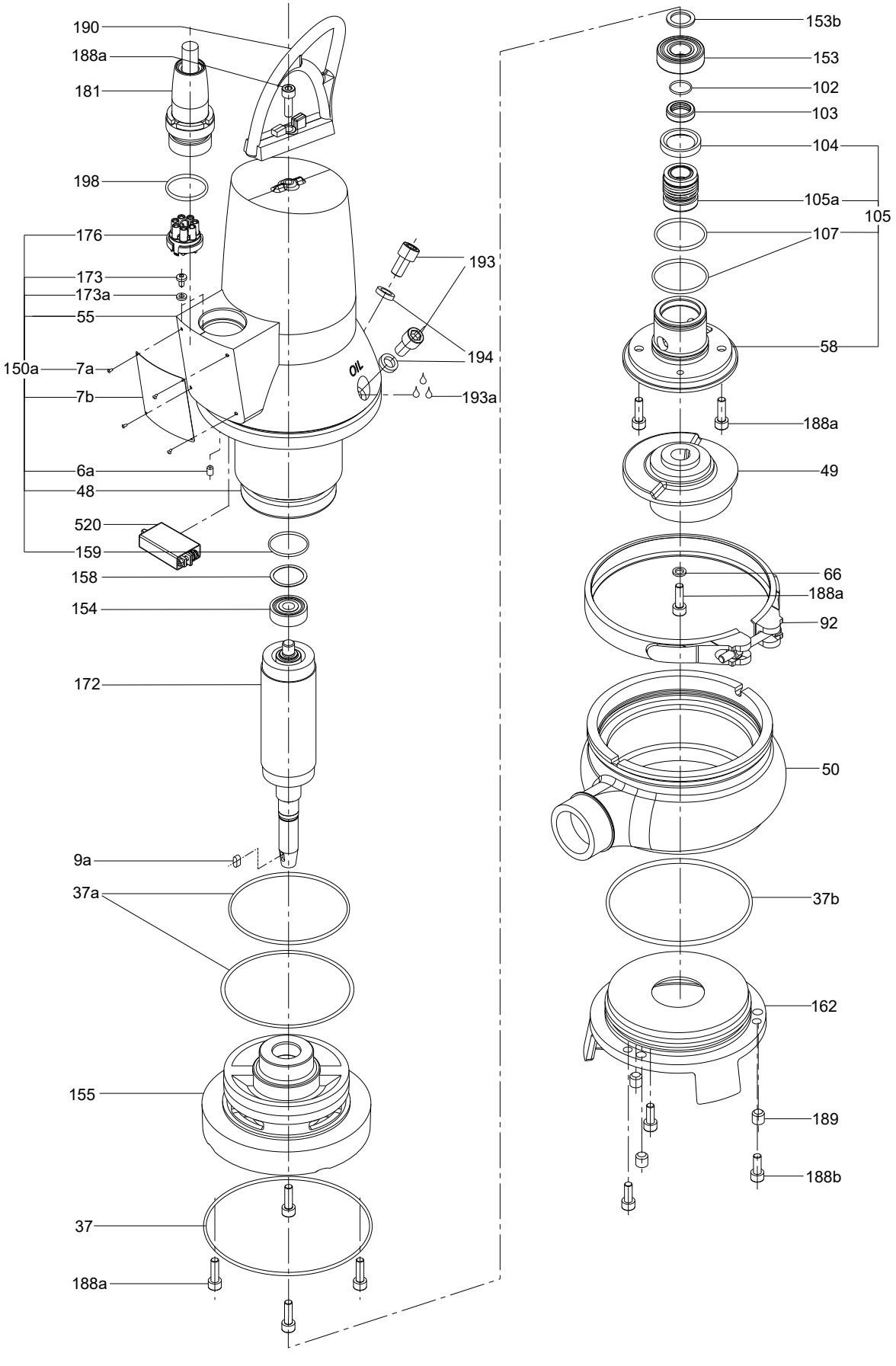

Exploded view for EP, 200-230 V, 460 V, 3 x 575 V

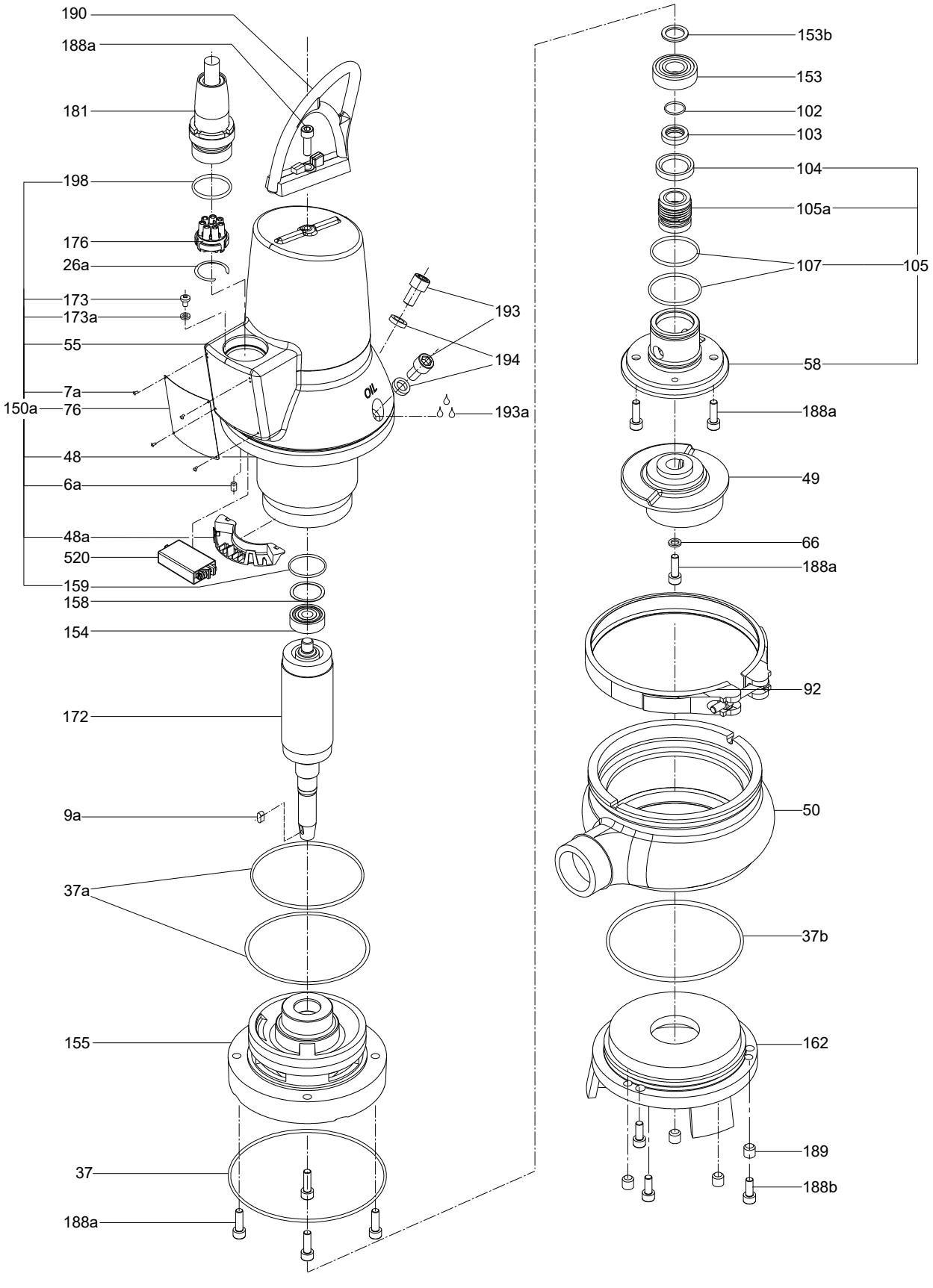

3. SL1,SLV standard and AUTO*ADAPT*

Identification

Nameplate

Fix the extra nameplate supplied with the pump at the installation site or keep it in the cover of this manual.

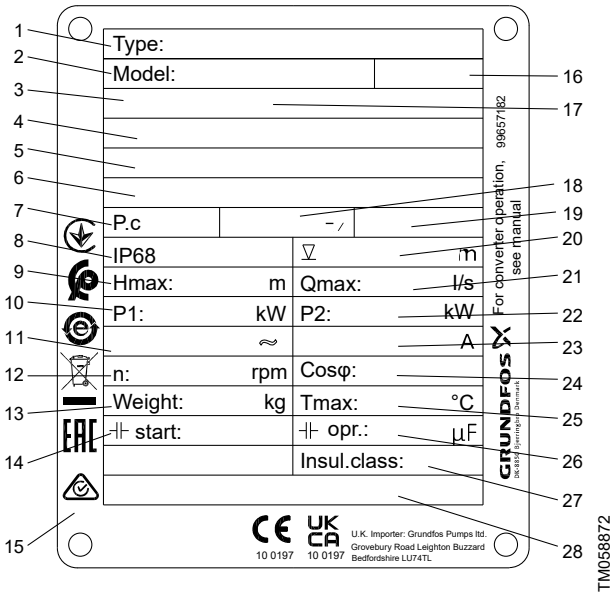

Nameplate

Pos.	Description
1	Type designation
2	Product number
3	Approval
4	ATEX certificate number
5	UKEX certification number
6	IEC Ex certificate number
7	Production code, year and week
8	Enclosure class according to IEC 60529
9	Maximum head [m]
10	Rated input power [kW]
11	Rated voltage
12	Speed [rpm]
13	Net weight [kg]
14	Start capacitor [µF]
15	Room for approval and information logos
16	Safety instructions, publication number
17	Ex description
18	Frequency [Hz]
19	AUTOADAPT Y/N
20	Maximum installation depth [m]
21	Maximum flow rate [l/s]
22	Rated power output [kW]
23	Rated current [A]
24	Cos φ, 1/1 load
25	Maximum liquid temperature [°C]
26	Run capacitor [µF]
27	Insulation class
28	Production site and country

Type keys

The type keys cover the entire ranges of Grundfos DP, EF, SL1, SLV standard and AUTOADAPT wastewater pumps. Each pump can be identified by the type key.

Type key SL1.50, SLV.65

Example: SL1.50.65.11.2.1.502

Code	Description	Explanation
SL	Grundfos sewage and wastewater pumps	Pump type
1	Single-channel impeller	Impeller type
V	Free-flow impeller (SuperVortex)	
50	Maximum solids size 50 = 50 mm	Pump passage
65	Nominal diameter of the pump outlet port 65 = 65 mm	Pump outlet
11	Output power P2 11 = 1.1 kW	Power [kW]
[ ]	Standard	Equipment
[ ]	Standard version	Pump version
Ex	Explosion-proof pump	
2	2-pole	Number of poles
1	Single-phase motor	Number of phases
[ ]	Three-phase motor	
5	50 Hz	Frequency [Hz] 1)
02	230 V, DOL	Voltage and starting method
0B	400-415 V, DOL	
0C	230-240 V, DOL	
[ ]	1st generation	Generation 2)
A	2nd generation	
B	3rd generation	
[ ]	Standard	Pump material
Z	Custom-built products	Customisation

1) Maximum frequency in case of frequency converter operation.

2) The pumps in the individual generations differ in design but are similar in terms of power rating.

Type key SL1.50, SLV.65

Example: SL1.50.65.11.E.2.1.502

Code	Description	Explanation
SL	Grundfos sewage/wastewater pump	Pump type
1	Single-channel impeller	Impeller type
V	Free-flow impeller (SuperVortex)	
50	Maximum solids size 50 = 50 mm	Pump passage
65	Nominal diameter of the pump outlet port 65 = 65 mm	Pump outlet
11	Output power P2 11 = 1.1 kW	Power [kW]
E	AUTOADAPT version	Equipment
[ ]	Standard version	Pump version
Ex	Explosion-proof pump	
2	2-pole	Number of poles
[ ]	Single-phase motor	Number of phases
3	Three-phase motor	
5	50 Hz	Frequency [Hz]
02	230 V, DOL	Voltage code and starting method
0B	400-415 V, DOL	
[ ]	1st generation	Generation 1)
A	2nd generation	
B	3rd generation	
[ ]	Standard	Pump material
Z	Custom-built products	Customisation

1) The pumps in the individual generations differ in design but are similar in terms of power rating.

Service parts

SL1, SLV standard
SL1.50, 0.9 - 1.5 kW, SLV.65, 0.9 - 1.5 kW

Kit, bearing

Pos.	Description	Kit No.	98682345
		Frame	0.9-1.5 kW
153	Bearing		1
154	Bearing		1

Kit, impeller

Pos.	Description	SL1.50			SLV.65		
		0.9 kW	1.1 kW	1.5 kW	0.9 kW	1.1 kW	1.5 kW
	Kit No.	96115096	96115097	96115098	96115110	96115099	96115100
9a	Key 5 x 5 x 12	1	1	1	1	1	1
49	Impeller	1	1	1	1	1	1
66	Lock washer	2	2	2	2	1	2
188a	Screw M8 x 25	1	1	1	1	1	1

Kit, lifting bracket

Pos.	Description	Kit No.	96690420
		Frame	1.1-1.5 kW / 1.5-2 HP
188a	Screw		2
190	Lifting bracket		1

Kit, O-ring

Pos.	Description	NBR	FKM
	Kit No.	96115107	96646049
26a	O-ring	1	1
37	O-ring	1	1
37a	O-ring	2	2
102	O-ring	1	1
107	O-ring	1	1
159	O-ring	2	1
185	O-ring	1	-
187	O-ring	1	-
194	Sealing washer	2	2
198	O-ring	1	1
37b	O-ring	2	2
108	O-ring	1	1
153b	O-ring	1	1

Kit, shaft seal

Pos.	Kit No.	96106536	96645161
	Description	BQQP	BQQV
9a	Key	1	1
66	Lock washer	1	1
102	O-ring	1	1
103	Bush	1	1
105	Shaft seal cartridge	1	1
188a	Screw M8 x 25	1	1
194	Sealing washer	2	2

Kit, pin housing

Pos.	Kit No.	96778908
177	Pin housing with 7 poles	1
-	Connector pin	12

Kit, upper guide rail holder

Pos.	Kit No.	96592037	96829357
	Description	DN 65/DN 80	DN 65/DN 80
-	Upper guide rail holder	1	1
		Before 1044 cast iron	After 1044 St.steel

Spare, clamp

Pos.	Kit No.	96592050
92	Clamp complete	1

Spare, plug for power connection for SL1 and SLV

Pos.	Description	Type	Connection	Kit No.
176	Plug for power connection	A	1-phase	96747258
		A	Y	96747254
		A	D	96747257

Spare, SmartSeal

Pos.	Description	DN 65		DN 65/80	
	Rubber type	NBR	FKM	NBR	FKM
	Kit No.	*96575022*	*96659160*	*96575023*	*96659161*
-	SmartSeal for guide shoe	1	1	1	1

Exploded view for SL1, 0.9 - 1.5 kW

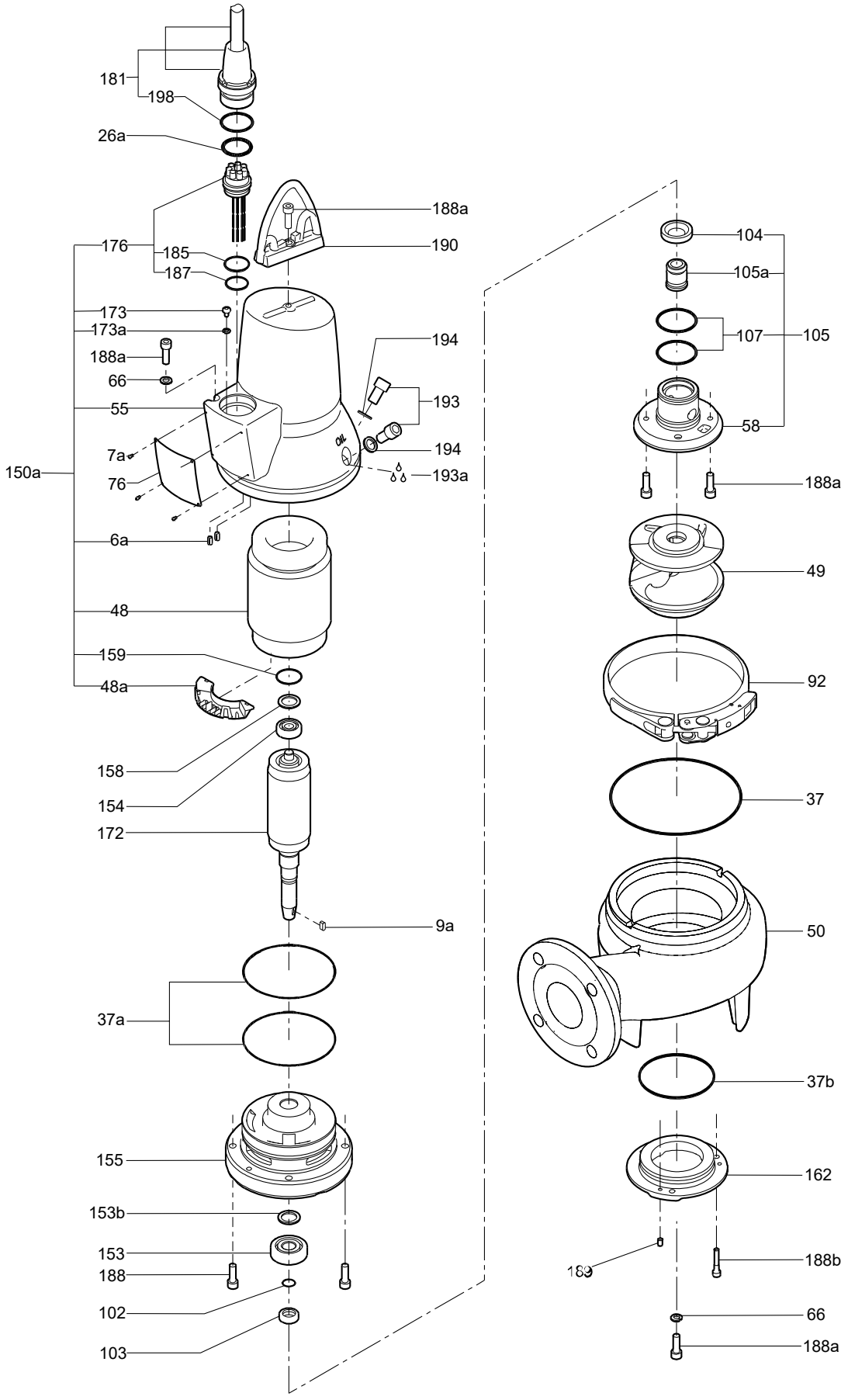

Exploded view for SLV, 0.9 - 1.5 kW

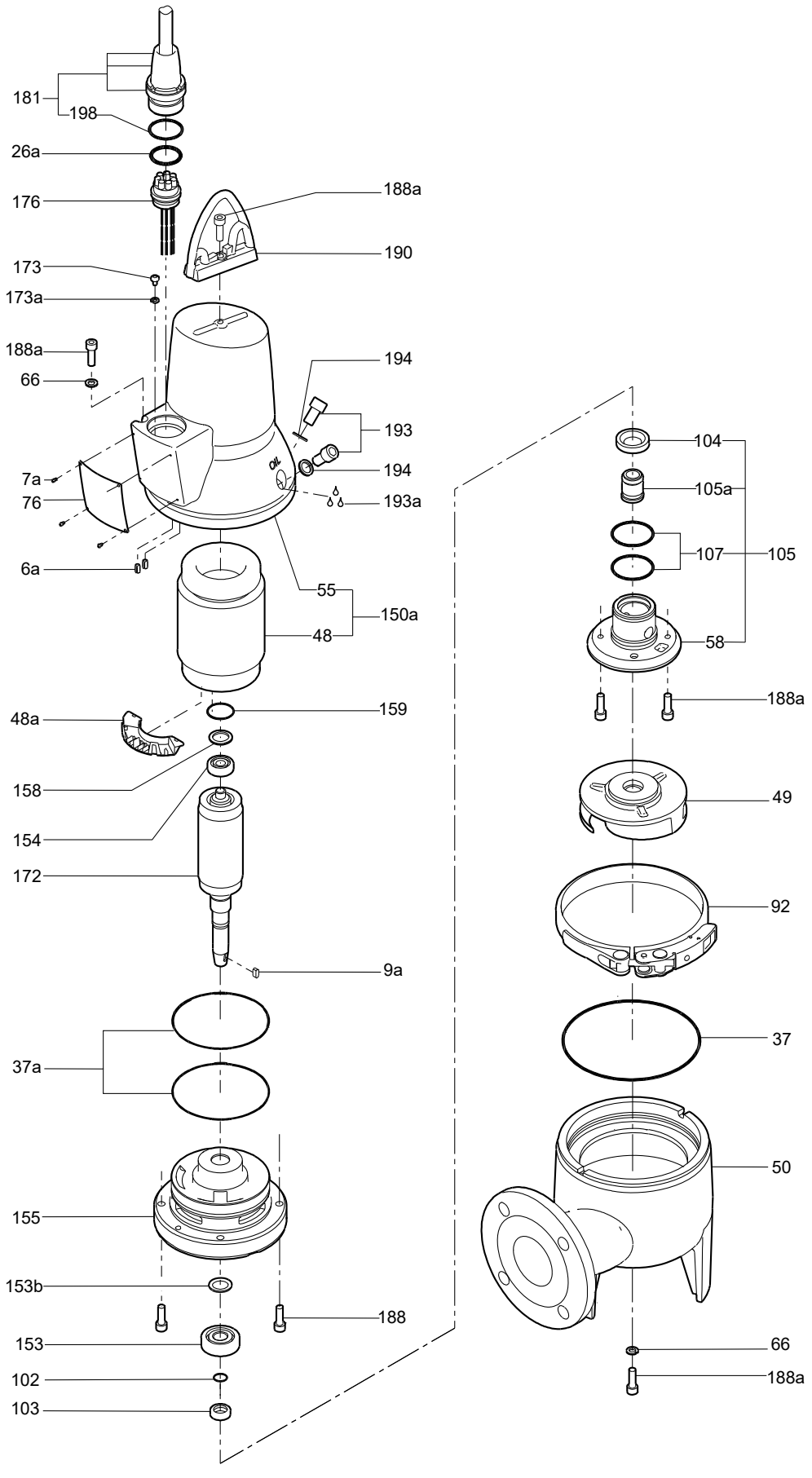

SL1.50, SL1.80, SL1.100 from 2.2 kW/3 HP, SLV.65, SLV.80, SLV.100 from 2.2 kW/3 HP

Kit, bearing

Pos.	Description	2-pole	2.2 - 3.0 kW / 3 - 4 HP	4.0 - 7.5 kW / 5.5 - 10 HP	9.2 - 11 kW / 12.5 - 15 HP
		4-pole	1.1 - 2.2 kW / 1.5 - 3 HP	3.0 - 5.5 kW / 4 - 7.5 HP	7.5 kW / 10 HP
		Kit No.	*96690703*	*96904928*	*96690705*
99a	Retaining ring		1	1	1
153	Bearing D-end		1	1	1
154	Bearing N-end		1	1	1
158	Waved washer		1	1	1

Kit, guide shoe

Description	Outlet	DN 80	DN 80/100	DN 100	DN 100/150	DN 150
	Rubber type	NBR	NBR	NBR	NBR	NBR
	Kit No.	*96592058*	*96611611*	*96592056*	*96611613*	*96592060*
Guide shoe		1	1	1	1	1
Rubber seal		1	1	1	1	1

Kit, lifting bracket

Pos.	Description	2-pole	2.2 - 4 kW / 3 - 5.5 HP	6 - 11 kW / 8 - 15 HP	2.2 - 3 kW / 3-4 HP
		4-pole	1.1 - 4 kW / 1.5 - 5.5 HP	5.5 - 7.5 kW / 7.5 - 10 HP	1.5 - 2.2 kW / 2-3 HP
		Kit No.	*96873469*	*96873519*	*96690428*
190	Lifting bracket		1	2	1
118a	Screw		2	2	2

Kit, impeller-fixing parts

Pos.	Description	2-pole	2.2 - 4.0 kW / 3.0 - 5.5 hp	5.5 - 11.0 kW / 4.0 - 15.0 hp
		4-pole	1.1 - 2.2 kW / 1.5 - 3.0 hp	3.0 - 7.5 kW / 4.0 - 10.0 hp
		Kit No.	*96102365*	*96102366*
9a	Key		-	1
66	Washer		1	1
157	Corrugated spring		1	1
188a	Screw		1	1

Kit, moisture switch

Pos.	Description	Kit No.
		96817995
520	Moisture switch calibrated	1
	Screw	2
	Nut	2
	Connector	3
	Connector	3
	Screw combined slot torx straight	2
	Guard for moisture switch	1

Kit, O-ring

Pos.	Description	2-pole	2.2 - 3.0 kW / 1.5 - 3 HP	4.0 kW / 5.5 HP	6.0 - 7.5 kW / 8-10 HP	9.2 - 11 kW / 12.5 - 15 HP
		4-pole	1.1 - 2.2 kW / 1.5 - 3 HP	-	3.0 - 5.5 kW / 4 - 7.5 HP	7.5 kW / 10 HP
		NBR, Kit No.	*96873520*	*96873521*	*96873542*	*96873543*
37	O-ring		1	1	1	1
37a	O-ring		1	1	1	1
37b	O-ring		1	1	1	1
102	O-ring		1	1	-	-
106	O-ring		1	1	1	1
107	O-ring		1	1	1	1

Pos.	Description	2-pole	2.2 - 3.0 kW / 1.5 - 3 HP	4.0 kW / 5.5 HP	6.0 - 7.5 kW / 8-10 HP	9.2 - 11 kW / 12.5 - 15 HP
		4-pole	1.1 - 2.2 kW / 1.5 - 3 HP	-	3.0 - 5.5 kW / 4 - 7.5 HP	7.5 kW / 10 HP
		NBR, Kit No.	96873520	96873521	96873542	96873543
109	O-ring		1	1	1	1
153b	O-ring		1	1	1	1
194	Sealing washer		2	2	2	2
198	O-ring		1	1	1	1

Kit, pin housing

Pos.	Description	Kit No.
176	Pin housing with 7 poles	96778908
	Pin housing with 7 connector pins in 10-pole housing	97769613
	Pin housing with 10 poles	96778912

Kit, shaft seal

Pos.	Production date		Before week 17, 2019		After week 17, 2019	
	2-pole		2.2 - 4.0 kW / 3 - 5.5 HP	6.0 - 11 kW / 8 - 15 HP	2.2 - 4.0 kW / 3 - 5.5 HP	6.0 - 11 kW / 8 - 15 HP
	4-pole		1.1 - 2.2 kW / 1.5 - 3.0 HP	3.0 - 7.5 kW / 4 - 10 HP	1.1 - 2.2 kW / 1.5 - 3.0 HP	3.0 - 7.5 kW / 4 - 10 HP
	Rubber type		NBR	NBR	NBR	NBR
	Kit No.		96102360	96102361	99488972	99489003
105	Shaft seal complete		1	1	1	1
107	O-ring	110 x 3	1	-	1	-
		134.5 x 3	1	1	1	1
		160 x 3	-	1	-	1
153b	O-ring	17.3 x 2.4	1	-	-	-
		18.77 x 1.78	1	-	-	-
		28 x 2	-	1	-	-
157	Waved washer		1	1	1	1

Kit, single-channel Impeller

Pos.	Description	Free passage	80	80	50
		2-pole			4.0
		4-pole	2.2	3.0	
		Cast iron	96091223	96091224	96091221
49	Impeller		1	1	1
49c	Wear ring for impeller		1	1	1

Pos.	Description	Free passage	100	100
		2-pole		
		4-pole	5.5	7.5
		Cast iron	96091229	96091230
49	Impeller		1	1
49c	Wear ring for impeller		1	1

Kit, SuperVortex impeller

Pos.	Description	Free passage	65	80	65	80	100	65.40/80.40	80.40
		2-pole	2.2		3.0	3.0		4.0	
		4-pole		2.2			3.0		4
		Cast iron	96886437	96812794	96886439	96886439	96886453	96886441	-
		Stainless steel	-	97759200	-	-	97759206	-	97759201
49	Impeller		1	1	1	1	1	1	1

Pos.	Description	Free passage	100	100	80	80	100	80	80
		2-pole							
		4-pole	4.0	5.5	6.0	7.5	7.5	9.2	11
		Cast iron	96886456	96882380	96812823	96812827	96882475	96812831	96812654
		Stainless steel	97759207	97759208	97759202	97759203	97759209	97759204	97759205
49	Impeller		1	1	1	1	1	1	1

Kit, tube impeller "Generation A"

Pos.	Description	SL1 100.75.4
		97783819
49	Impeller 50Hz SE1.100.75.4, tube catph.	1
49C	Wear ring for impeller SE1.100	1
58	Cover for oil chamber D, D235, catap	1

S-tube impeller

Please check Grundfos Product Center.

Kit, SL1 MK2 S-Tube Impeller (50Hz)

Pos.	Description	Free passage	80	65	80	65	80	100	65.40/80.40	80.40
		2-pole		2.2		3.0	3.0		4.0	
		4-pole	1.5		2.2			3.0		4.0
		Cast iron	99186518	99313882	99186517	99313940	99313940	99313953	99313941	99313954
		Q-version Stainless steel (1.4401)	98255554	92688063	98255557	92688066	92688066	98255560	92688069	98255563
49	Impeller		1	1	1	1	1	1	1	1
49C	Wear ring		1	1	1	1	1	1	1	1
46	Seal ring		1	1	1	1	1	1	1	1

Pos.	Description	Free passage	100	100	80	80	100
		2-pole					
		4-pole	4.0	5.5	5.5	7.5	7.5
		Cast iron	99186515	99186514	99313956	99313959	99186501
		Q-version Stainless steel (1.4401)	92777656	92777657	92777654	92777655	92777658
49	Impeller		1	1	1	1	1
49C	Wear ring		1	1	1	1	1
46	Seal ring		1	1	1	1	1

Kit, SL1 MK2 S-Tube Impeller (60Hz)

Pos.	Description	Free passage	80	65	80	65	80	100	65	80.80
		2-pole		2.2		3.0	3.0		4.0	
		4-pole	1.5		2.2			3.0		4.0
		Cast iron	99433717	99433714	99433718	99433715	99433715	99433719	99433716	99403500
		Q-version Stainless steel (1.4401)	92786353	92786350	92786354	92786351	92786351	92786355	92786352	92786356
49	Impeller		1	1	1	1	1	1	1	1
49C	Wear ring		1	1	1	1	1	1	1	1
46	Seal ring		1	1	1	1	1	1	1	1

Pos.	Description	Free passage	80.100	100.100/100.150	100	80	80	100
		2-pole						
		4-pole	4.0	4.0	5.5	5.5	7.5	7.5
		Cast iron	99433721	99433724	99403494	99433722	99433723	99433726
		Q-version Stainless steel (1.4401)	92786357	92786360	92786361	92786358	92786359	92786362
49	Impeller		1	1	1	1	1	1
49C	Wear ring		1	1	1	1	1	1
46	Seal ring		1	1	1	1	1	1

Kit, water-in-oil sensor

Pos.	Description	Type	50 Hz ATEX-approved	60 Hz FM-approved
		Kit No.	96904929	97717977
521	Disc spring		4	4
	Rubber bush		1	1
	Connector		1	-
	Splice		1	-
	Holder		1	1
	Washer		1	1
	WIO sensor		1	1

Kit, wear rings (SL1)

Pos.	Description	Free passage	Ø50/2"	Ø80/3"	Ø100/4"
		Rubber type	NBR	NBR	NBR
		Kit No.	96102362	96102363	96102364
46	Seal ring		1	1	1
49c	Wear ring		1	1	1

Wear ring (SL1)

Please check Grundfos Product Center.SLV without sensor

Kit/Spare, upper guide rail holder

Pos.	Production year	Before 1044	After 1044	Before 1044	After 1044
	Material	cast iron	st.steel	cast iron	st.steel
	Description	DN 65/DN 80	DN 65/DN 80	DN 100/DN 150	DN 100/DN 150
	Kit No.	96592037	96829357	96592038	96829358
-	Upper guide rail holder	1	1	1	1
-	Tube	-	2	-	2
-	Hex head bolt	-	2	-	2
-	Flat washer	-	2	-	2
-	Washer	-	2	-	2

Sapre, cable, 50 Hz

Pos.		Description	10 m	15 m	20 m	25 m
181	2.2-3 kW, 2-pole / 3-4 HP 1.5-2.2 kW, 4-pole / 2-3 HP	Standard	96591649	96659473	96591660	96689953
		Standard D	-	-	-	-
		Ex	96689976	96689977	96689978	96689979
		Ex D	-	-	-	-
		Screened Ex	96102486	96689980	96102488	96102489
	6-11 kW, 2-pole / 8-15 HP, 2-pole 3-7.5 kW, 4-pole / 4-10 HP, 4-pole	Standard	96689954	96689955	96689956	96689957
		Standard D	96689958	96689959	96689970	96689971
		Ex	96102482	96102483	96102484	96102485
		Ex D	96102498	96102499	96102500	96102501
		Screened Ex D	96102490	96102491	96102492	96102493
		Screened Ex Y	96769058	96769060	96769061	96769062

Spare, cable, 60 Hz

Pos.		Description	10 m / 33 ft	15 m / 49 ft	20 m / 66 ft	25 m / 82 ft
181	2.2-3 kW, 2-pole / 3-4 HP, 2-pole 1.5-2.2 kW, 4-pole / 2-3 HP, 4-pole	7 x 1.5 mm²/AWG16 DOL				
		Standard	97634728	97634909	97634910	97634911
		Ex	97634729	97634933	97634934	97634935
		Screened Ex	97634730	97634957	97634958	97634959
	6-7.5 kW, 2-pole / 8-10 HP, 2-pole 3-5.5 kW, 4-pole / 4-7.5 HP, 4-pole	4 x 2.5 mm²/AWG14 + 3 x 1.5 mm²/AWG16 DOL				
		Standard	97634902	97634921	97634922	97634923
		Ex	97634905	97634945	97634946	97634947
		Screened Ex D	97634908	97634969	97634970	97634971
		Screened Ex Y	97634907	97634963	97634964	97634965
	9.2-11 kW, 2-pole / 12-15 HP, 2-pole 7.5 kW, 4-pole / 10 HP, 4-pole	7 x 2.5 mm²/AWG14 + 3 x 1.5 mm²/AWG16 SD				
		Standard	97634903	97634927	97634928	97634929
		Ex	97634906	97634951	97634952	97634953
		Screened Ex D	97634908	97634969	97634970	97634971
		Screened Ex Y	97634907	97634963	97634964	97634965

Spare, clamp

Pos.	Description	2-pole	2.2 - 3.0 kW / 3 - 4 HP	4.0 - 7.5 kW / 5.5 - 10 HP	9.2 - 11 kW / 12.5 - 15 HP
		4-pole	1.1 - 2.2 kW / 1.5 - 3 HP	3.0 - 5.5 kW / 4 - 7.5 HP	7.5 kW / 10 HP
		Kit No.	96592061	96592063	96592064
92	Clamp		1	1	1

Spare, SmartSeal for auto coupling

Description	Outlet	DN 65	DN 65/80	DN 80	DN 80/100	DN 100	DN 100/150	DN 150
	Rubber type	NBR	NBR	NBR	NBR	NBR	NBR	NBR
	Kit No.	96575022	96575023	96575024	96575025	96575027	96575028	96575029
SmartSeal		1	1	1	1	1	1	1

Exploded view for SL1 without sensor

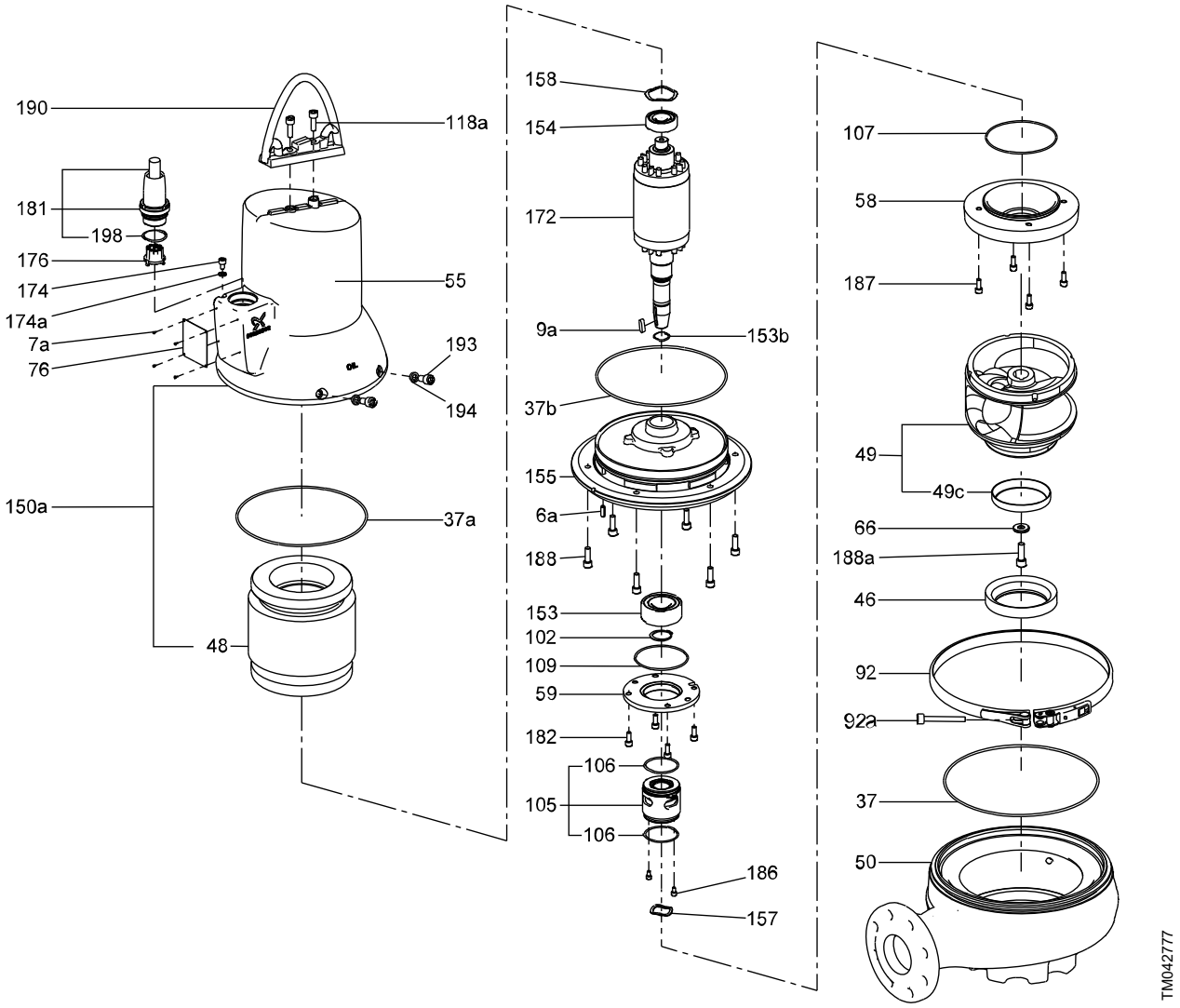

Exploded view for SL1 with sensors

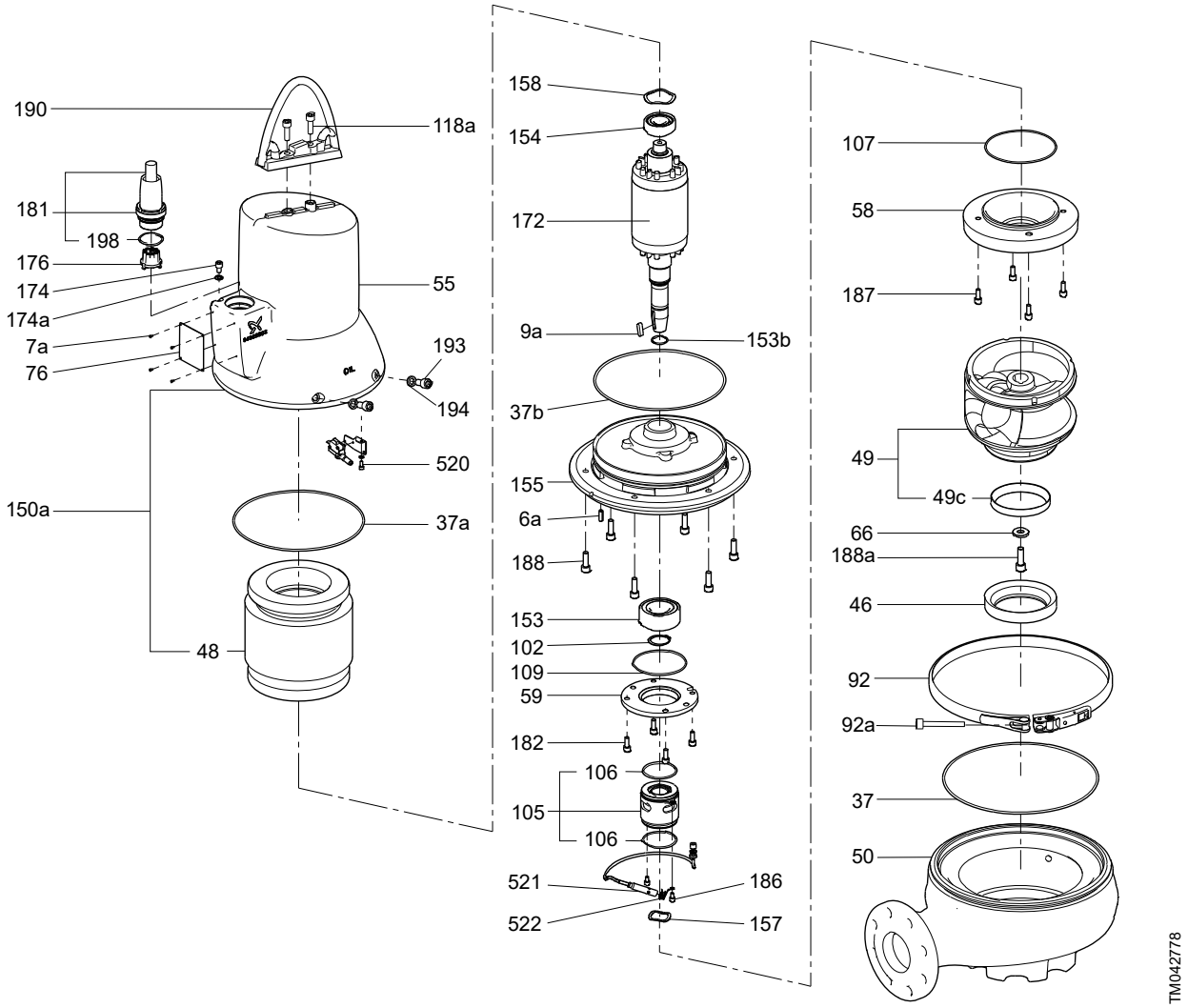

Exploded view for SLV without sensor

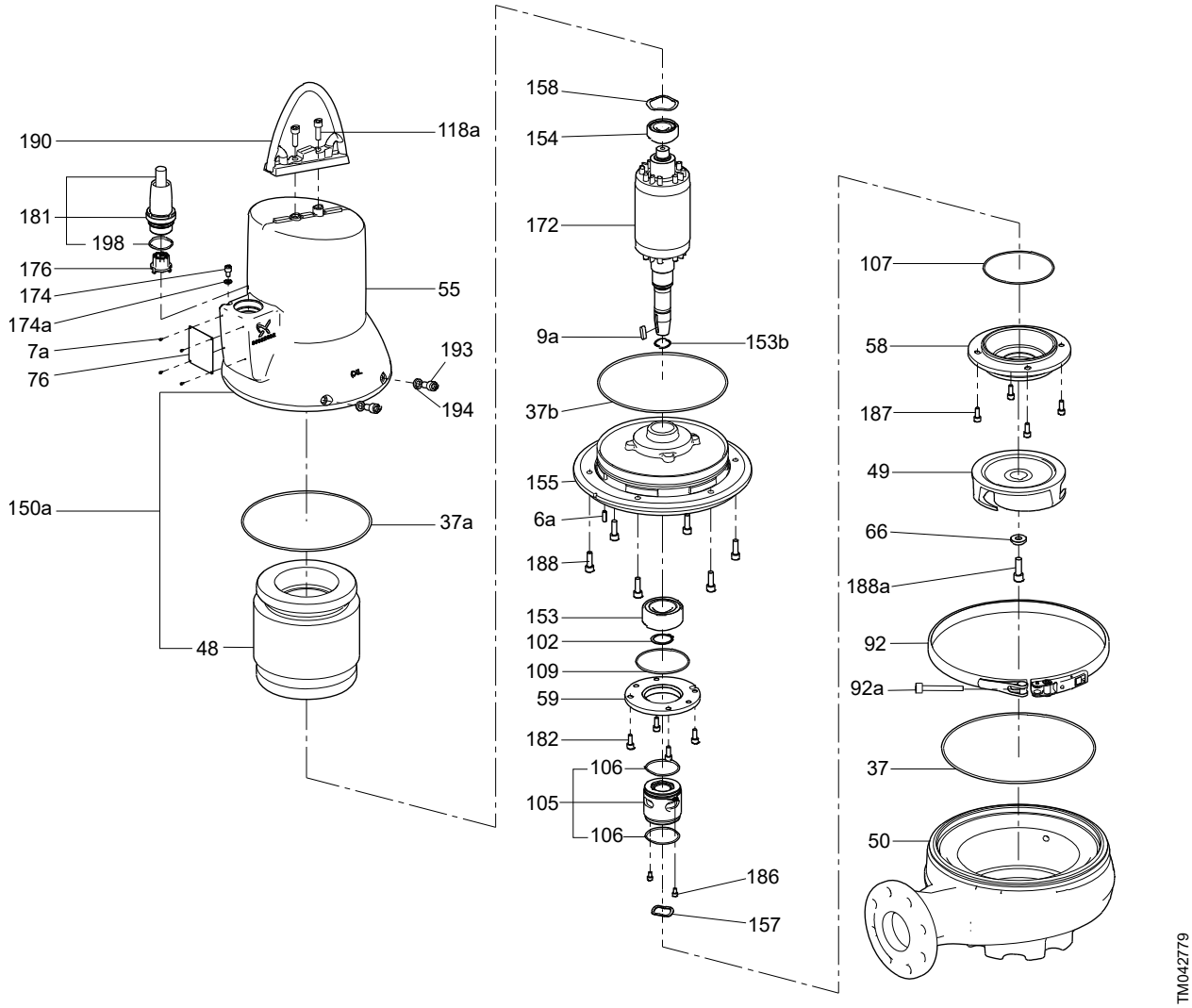

Exploded view for SLV with sensors

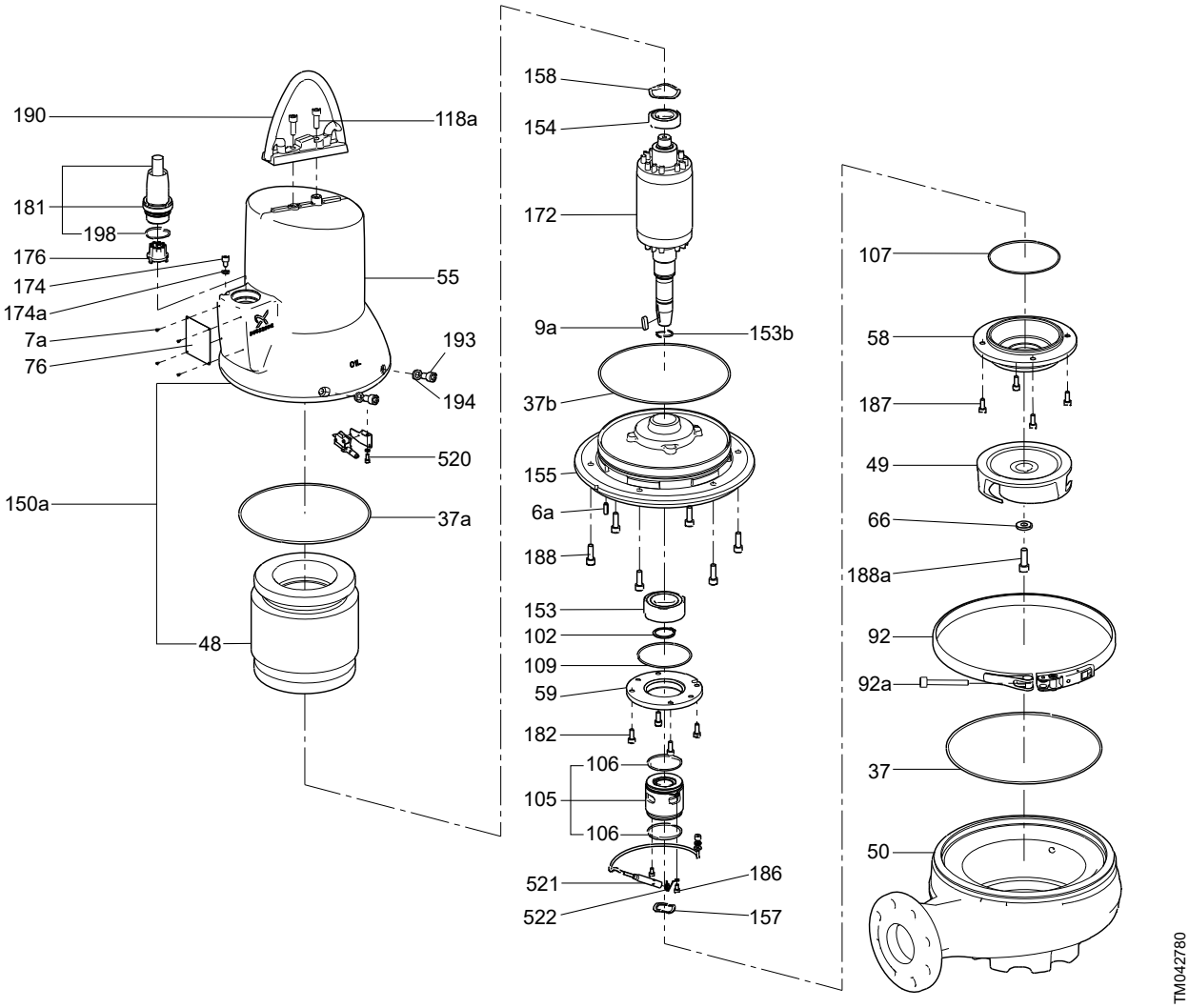

SL1, SLV AUTOADAPT

50 Hz

Kit, ball bearing

Pos.	Description	Type	0.9-1.5 kW
		Kit No.	98682345
153	Bearing		1
154	Bearing		1

Kit, dry running sensor

Pos.	Description	Type	Standard	Ex
		Kit No.	96898083	96984131
90b	O-ring 180 x 4		1	2
285	Dry-running sensor		1	1
285a	O-ring 30 x 3		2	1
285b	Set screw for sensor housing M6 x 18		1	1

Kit, electronic controller

Pos.	Description	Type	Standard 1-phase	Ex 1-phase	Standard 3-phase	Ex 3-phase
		2-pole	0.9-1.1 kW	0.9-1.1 kW	0.9-1.5 kW	0.9-1.5 kW
		Kit No.	96898085	99672003	96898086	99672005
26a	O-ring 32 x 4		1	1	1	1
90a	Elecronic unit		1	1	1	1
90b	O-ring 180 x 4		1	1	1	1
198	O-ring 34 x 3		1	1	1	1
287b	O-ring 20 x 3		1	1	1	1
287c	Screw for sensor housing		1	-	1	-
-	Cable tie		1	1	1	1
-	Splice		-	4	-	3

Kit, impeller

Pos.	Description	SL1.50			SLV.65		
		0.90 kW	1.1 kW	1.5 kW	0.9 kW	1.1 kW	1.5 kW
	Kit No.	96115096	96115097	96115098	96115110	96115099	96115100
9a	Key 5 x 5 x 12	1	1	1	1	1	1
49	Impeller	1	1	1	1	1	1
66	Lock washer	1	1	1	1	1	1
188a	Screw M8 x 25	2	2	2	2	1	2

Kit, level sensor

Pos.	Description	Type	Standard	Ex
		Kit No.	96898082	96984130
90b	O-ring 180 x 4		1	1
287	Level sensor		1	1
287b	O-ring 20 x 3		1	1
287c	Set screw for sensor housing M6 x 18		1	1

Kit, lifting bracket

Pos.	Description	Kit No.	96984147
188a	Screw M8 x 25		1
190	Lifting bracket		1

Kit, O-ring

Pos.	Description	NBR	FKM
	Kit No.	96115107	96646049
26a	O-ring	1	1
37	O-ring	1	1
37a	O-ring	2	2
102	O-ring	1	1
107	O-ring	1	1
159	O-ring	2	1
185	O-ring	1	-
187	O-ring	1	-
194	Sealing washer	2	2
198	O-ring	1	1
37b	O-ring	2	2
108	O-ring	1	1
153b	O-ring	1	1

Kit, power plug

Pos.	Description	Type	Standard & Ex
		Kit No.	96984144
26a	Retaining ring		1
90b	O-ring		1
176	Cable with connect cpl.		1
198	O-ring		1

Kit, PT1000 with bracket

Pos.	Description	Type	Standard 3-ph. and Ex
		Kit No.	*97698437*
161b	PT1000 sensor with bracket		1
90b	O-ring 180 x 4		1

Kit, run capacitor

Pos.	Description	Kit No.	*96898084*
90b	O-ring 180 x 4		1
161c	Capacitor cpl.		1

Kit, shaft seal

Pos.	Kit No.	*96106536*	*96645161*
	Description	BQQP	BQQV
9a	Key	1	1
66	Lock washer	1	1
102	O-ring	1	1
103	Bush	1	1
105	Shaft seal cartridge	1	1
188a	Screw M8 x 25	1	1
194	Sealing washer	2	2

Kit, upper guide rail holder

Pos.	Kit No.	*96829357*
	Description	DN 65/DN 80
-	Upper guide rail holder	1

Spare, cable

Pos.	Description	Length	10		15		20		25	
		Type	Standard	Ex	Standard	Ex	Standard	Ex	Standard	Ex
181	Cable		*96591649*	*96689976*	*96659473*	*96689977*	*96591660*	*96689978*	*96689953*	*96689979*

Spare, clamp

Pos.	Kit No.	*96592050*
	Description	
92	Clamp complete	1

Spare, SmartSeal

Pos.	Kit No.	*96575022*	*96659160*
	Description	NBR	FKM
		DN 65	
-	SmartSeal for guide shoe	1	1

Exploded view for SL1.50

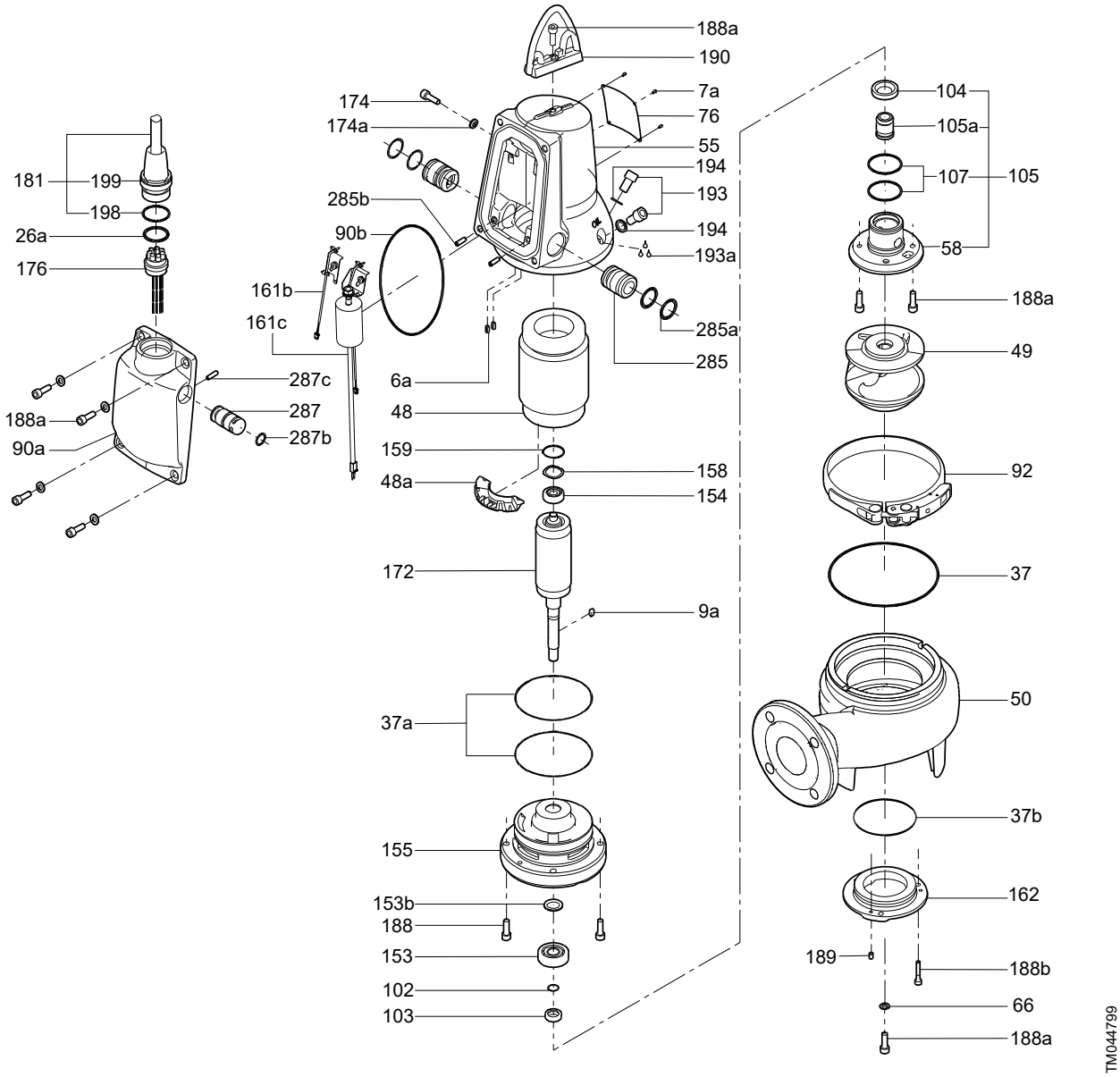

Exploded view for SLV. 65

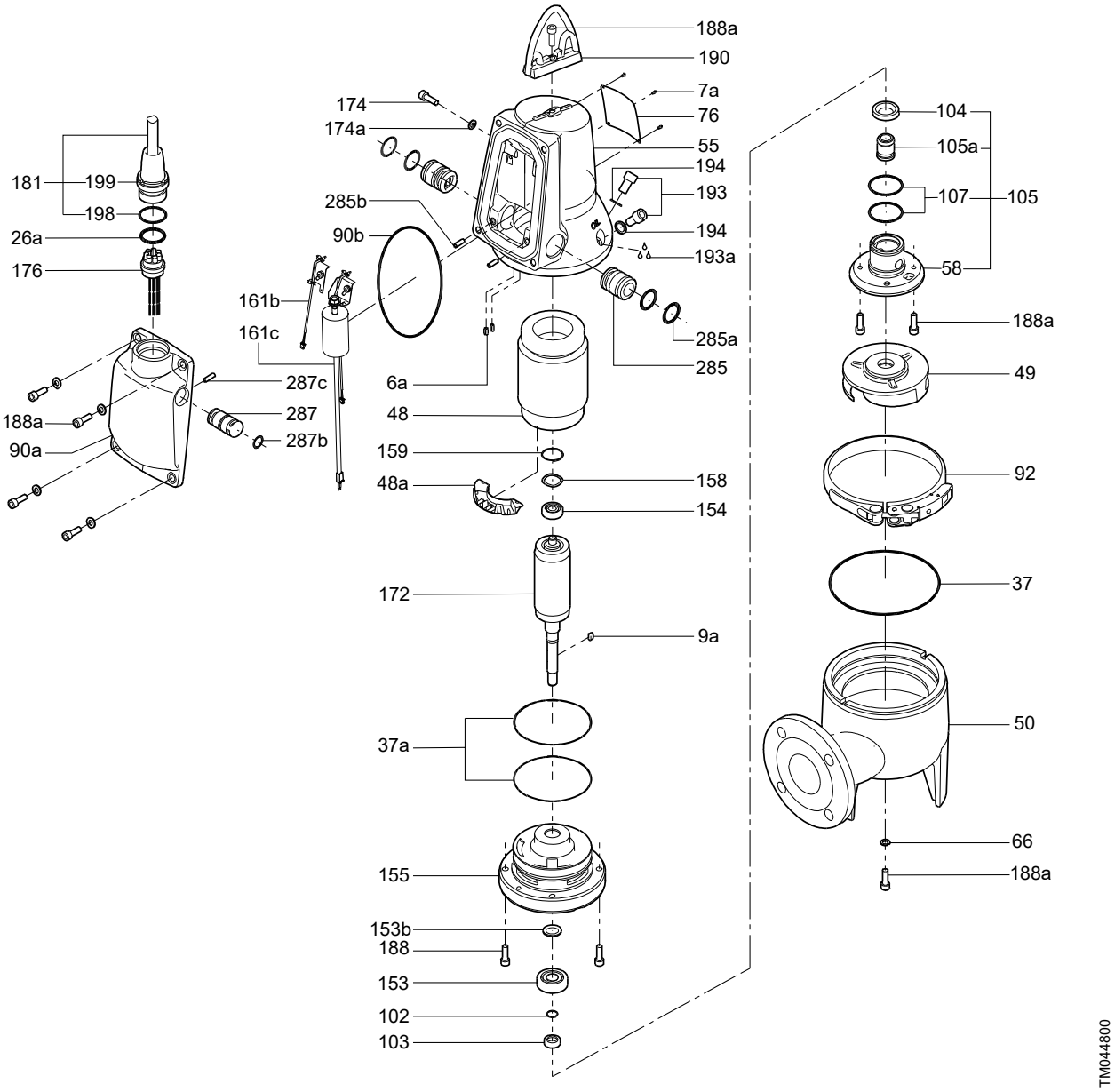

4. SL1, SLV 60 Hz

Identification

Nameplate

Fix the extra nameplate supplied with the pump at the installation site or keep it in the cover of this manual.

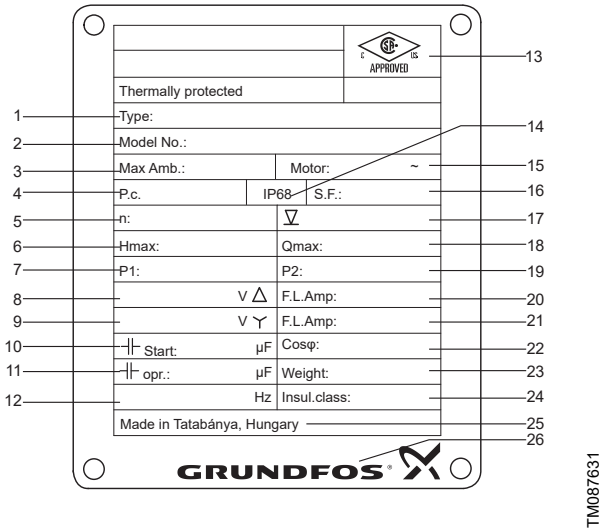

DP, EF, SL1 and SLV pumps

Pos.	Description	Pos.	Description
1	Type designation	14	Enclosure class
2	Product number + serial number	15	Number of phases
3	Max. ambient/liquid temperature [K]	16	Motor safety factor
4	Production code (YYWW)	17	Max installation depth [ft]
5	Speed [rpm]	18	Max flow rate [USgpm]
6	Rated max head [ft]	19	Nominal power output P2 [hp]
7	Nominal power input P1 [hp]	20	Rated current delta connection [A]
8	Rated voltage, delta connection [V]	21	Rated voltage, star connection [A]
9	Rated voltage, star connection [V]	22	Cos Φ, 1/1 load
10	Start capacitor [µF]	23	Net weight [lbs]
11	Run capacitor [µF]	24	Insulation class
12	Frequency [Hz]	25	Production site and country
13	cCSAus approval	26	Grundfos logo

Type keys

The type keys cover the entire ranges of Grundfos DP, EF, SL1, SLV ANSI 60 Hz wastewater pumps.

SL1 and SLV

Example: SLV.25.A25.20.2.60M

Code	Description	Explanation
SL	Grundfos sewage and wastewater pumps	Pump type
SL1	Sewage pump with single-channel impeller	Impeller type
SLV	Sewage pump with free-flow impeller (SuperVortex)	
25	Maximum solids size [inch]	Pump passage
A25	Nominal diameter of the pump outlet port/10 [inch]	Pump outlet
20	Rated output power/10 [hp]	Power
2	2-pole motor	Number of poles
1	Single-phase motor	Number of phases
[ ]	Three-phase motor	
6	60 Hz	Frequency[1)]
03	1 x 208 - 230 V, DOL	Voltage code and starting method
0M	3 x 200 - 230 V, DOL	
0H	3 x 460 V, DOL	
0L	3 x 575 V, DOL	
[ ]	Standard	Pump material
Z	Custom-built products	Customization

1): Maximum frequency in case of frequency converter operation.

Service parts

SL1, SLV 60 Hz

Kit, bearing

Pos.	Frame	A
	Kit No.	98682345
153	Ball bearing	1
154	Ball bearing	1

Kit, impeller

Pos.	Pump type	SLV		SL1
	Output power [hp]	1.5	2	2
	Kit No.	93237667	96115110	96115096
9a	Key	1	1	1
49	Impeller	1	1	1
66	Wedge lock washer	1	1	1
188a	Hex socket head cap screw	1	1	1

Kit, Moisture switch

Pos.	Kit No.	99309996
520	Moisture switch	1
-	Insulation shell	1
890	Connector	2
-	Cable tie	1

Kit, O-ring

Pos.	Rubber material	NBR
	Kit No.	93211934
37a	O-ring D114x3	2
37	O-ring D164,5x3,0	1
37b	O-ring D86x4,1	1
37b	O-Ring 135,0X4,0	1
102	O-ring D19x1,5	1

Kit, shaft seal

Pos.	Material	BQQP
	Kit No.	96106536
9A	Key	1
58A	Hex socket head cap screw	1
66	Wedge lock washer	1
102	O-ring	1
103	Bush	1
105	Shaft seal	1
194	Seal washer	2

Spare, cable

Pos.	Kit No.	97634728
181	Cable, 10m	1

Spare, volute

Pos.	Description	SLV.25.A25.15/20 ANSI	SL1.20.A25.20 ANSI
	Kit No.	93231347	93229537
50	Pump housing	1	1

Exploded view for SL1, 1 x 208 - 230 V

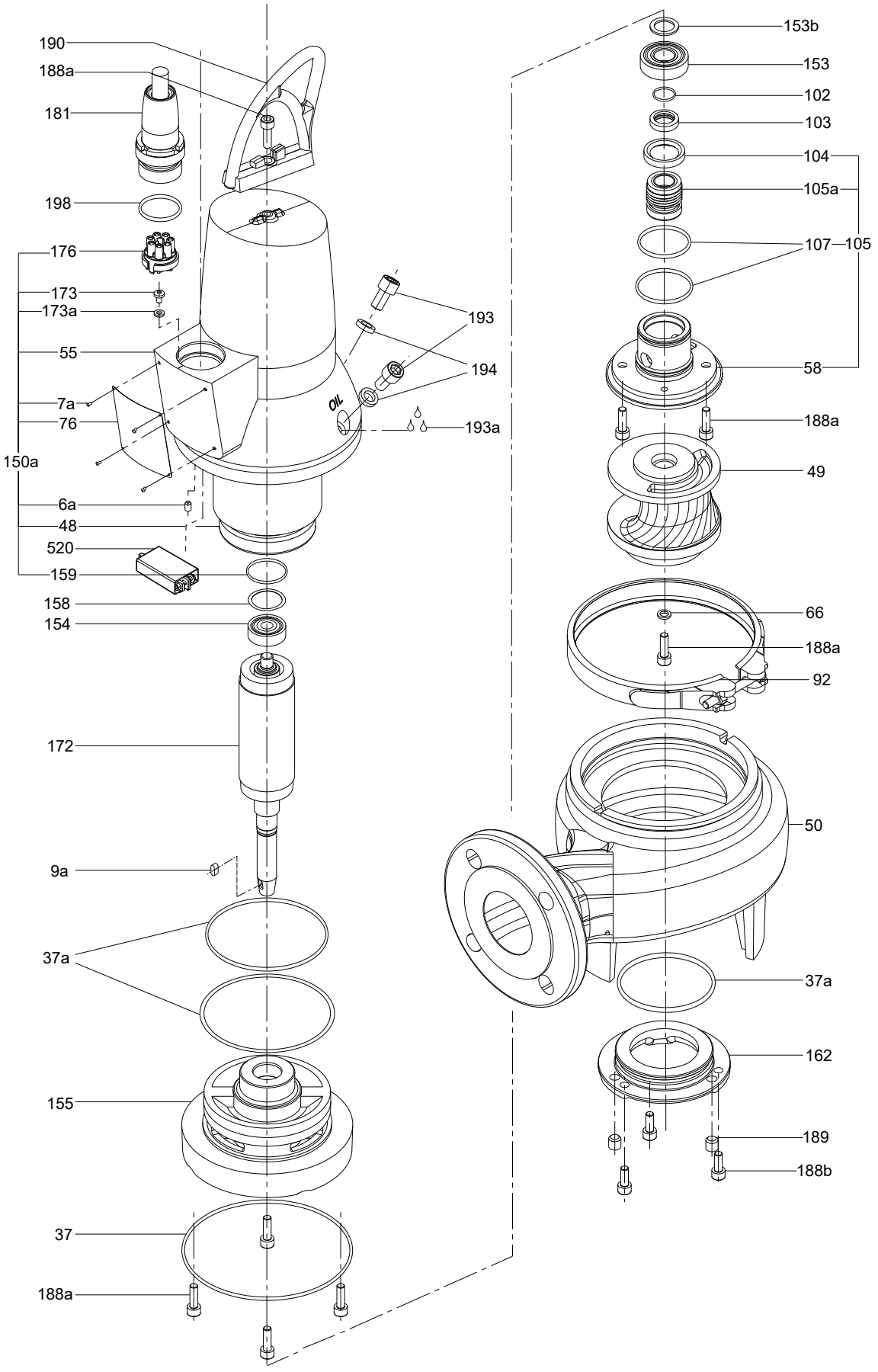

Exploded view for SL1, 3 x 200 - 230 V, 3 x 460 V, 3 x 575 V

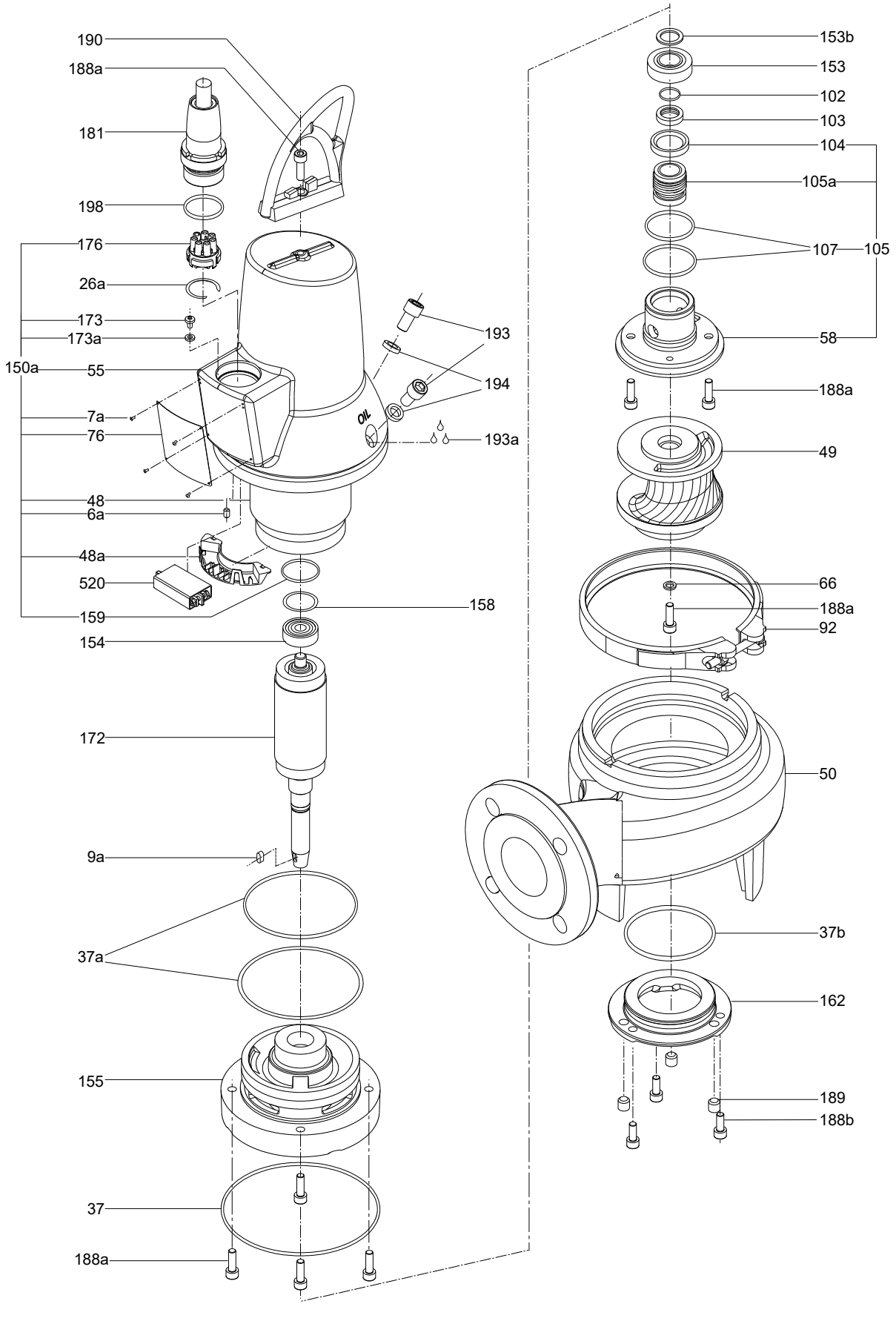

Exploded view for SLV, 1 x 208 - 230 V

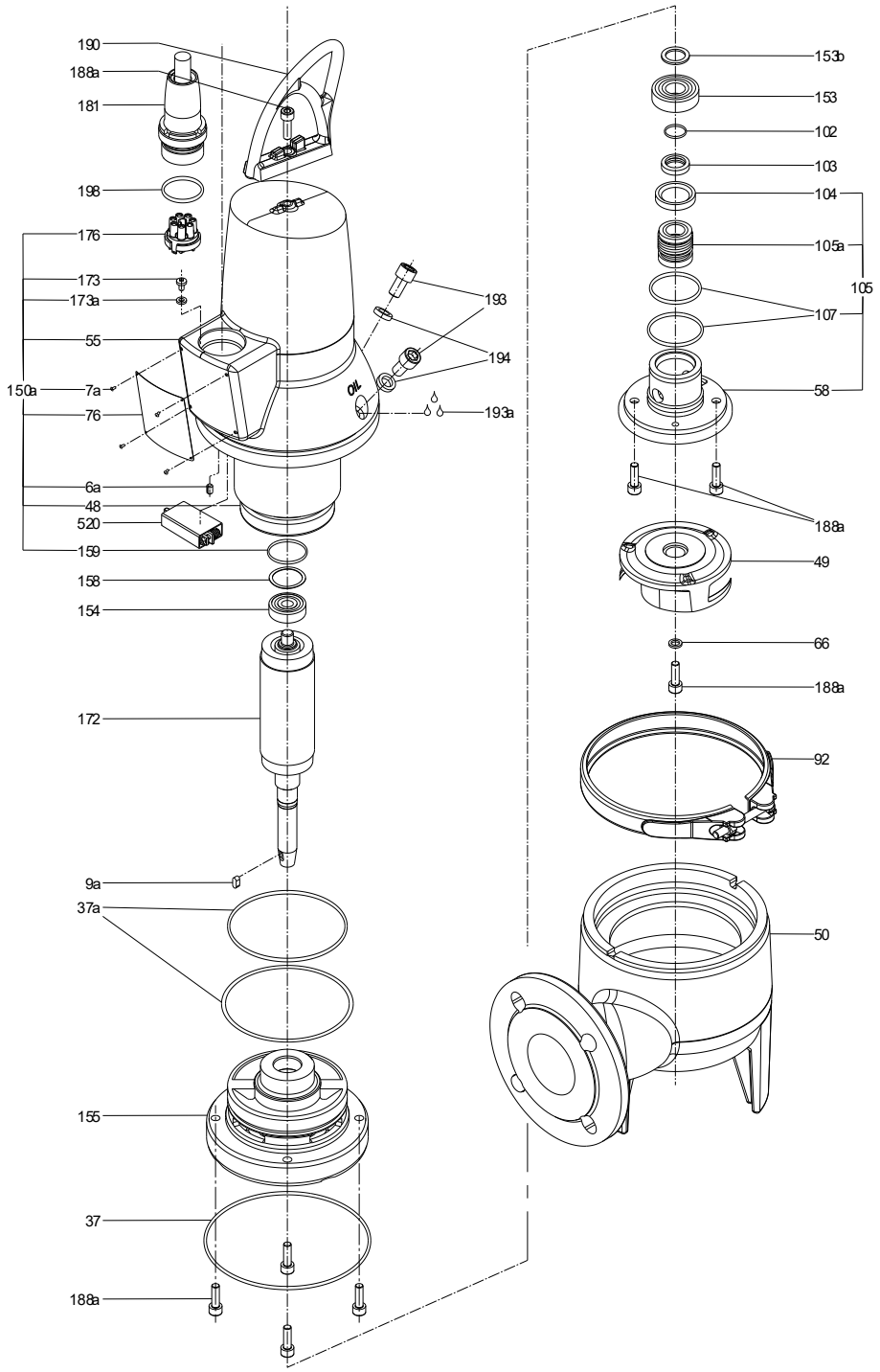

Exploded view for SLV, 3 x 200 - 230 V, 3 x 460 V, 3 x 575 V

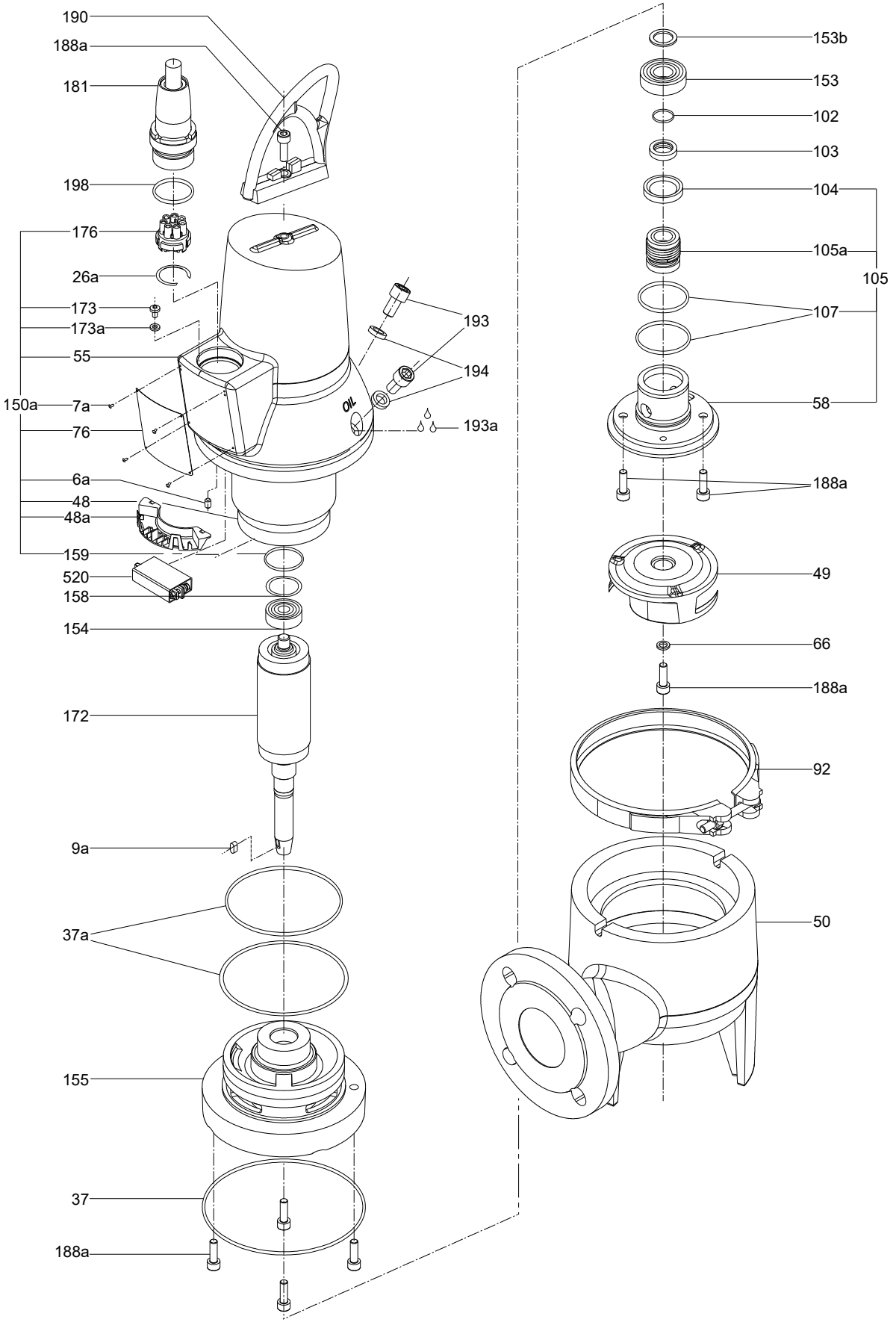

Argentina
Bombas GRUNDFOS de Argentina S.A.
Ruta Panamericana km. 37.500industin
1619 - Garín Pcia. de B.A.
Tel.: +54-3327 414 444
Fax: +54-3327 45 3190

Australia
GRUNDFOS Pumps Pty. Ltd.
P.O. Box 2040
Regency Park
South Australia 5942
Tel.: +61-8-8461-4611
Fax: +61-8-8340-0155

Austria
GRUNDFOS Pumpen Vertrieb Ges.m.b.H.
Grundfosstraße 2
A-5082 Grödig/Salzburg
Tel.: +43-6246-883-0
Fax: +43-6246-883-30

Belgium
N.V. GRUNDFOS Bellux S.A.
Boomsesteenweg 81-83
B-2630 Aartselaar
Tel.: +32-3-870 7300
Fax: +32-3-870 7301

Bosnia and Herzegovina
GRUNDFOS Sarajevo
Zmaja od Bosne 7-7A
BiH-71000 Sarajevo
Tel.: +387 33 592 480
Fax: +387 33 590 465
www.ba.grundfos.com
E-mail: grundfos@bih.net.ba

Brazil
BOMBAS GRUNDFOS DO BRASIL
Av. Humberto de Alencar Castelo Branco, 630
CEP 09850 - 300
São Bernardo do Campo - SP
Tel.: +55-11 4393 5533
Fax: +55-11 4343 5015

Bulgaria
Grundfos Bulgaria EOOD
Slatina District
Iztochna Tangenta street no. 100
BG - 1592 Sofia
Tel.: +359 2 49 22 200
Fax: +359 2 49 22 201
E-mail: bulgaria@grundfos.bg

Canada
GRUNDFOS Canada inc.
2941 Brighton Road
Oakville, Ontario
L6H 6C9
Tel.: +1-905 829 9533
Fax: +1-905 829 9512

China
GRUNDFOS Pumps (Shanghai) Co. Ltd.
10F The Hub, No. 33 Suhong Road
Minhang District
Shanghai 201106 PRC
Tel.: +86 21 612 252 22
Fax: +86 21 612 253 33

Colombia
GRUNDFOS Colombia S.A.S.
Km 1.5 vía Siberia-Cota Conj. Potrero Chico,
Parque Empresarial Arcos de Cota Bod. 1A.
Cota, Cundinamarca
Tel.: +57(1)-2913444
Fax: +57(1)-8764586

Croatia
GRUNDFOS CROATIA d.o.o.
Buzinski prilaz 38, Buzin
HR-10010 Zagreb
Tel.: +385 1 6595 400
Fax: +385 1 6595 499
www.hr.grundfos.com

Czech Republic
GRUNDFOS Sales Czechia and Slovakia s.r.o.
Čajkovského 21
779 00 Olomouc
Tel.: +420-585-716 111

Denmark
GRUNDFOS DK A/S
Martin Bachs Vej 3
DK-8850 Bjerringbro
Tel.: +45-87 50 50 50
Fax: +45-87 50 51 51
E-mail: info_GDK@grundfos.com
www.grundfos.com/DK

Estonia
GRUNDFOS Pumps Eesti OÜ
Peterburi tee 92G
11415 Tallinn
Tel.: + 372 606 1690
Fax: + 372 606 1691

Finland
OY GRUNDFOS Pumput AB
Trukkikuja 1
FI-01360 Vantaa
Tel.: +358-(0) 207 889 500

France
Pompes GRUNDFOS Distribution S.A.
Parc d'Activités de Chesnes
57, rue de Malacombe
F-38290 St. Quentin Fallavier (Lyon)
Tel.: +33-4 74 82 15 15
Fax: +33-4 74 94 10 51

Germany
GRUNDFOS GMBH
Schlüterstr. 33
40699 Erkrath
Tel.: +49-(0) 211 929 69-0
Fax: +49-(0) 211 929 69-3799
E-mail: infoservice@grundfos.de
Service in Deutschland:
kundendienst@grundfos.de

Greece
GRUNDFOS Hellas A.E.B.E.
20th km. Athinon-Markopoulou Av.
P.O. Box 71
GR-19002 Peania
Tel.: +0030-210-66 83 400
Fax: +0030-210-66 46 273

Hong Kong
GRUNDFOS Pumps (Hong Kong) Ltd.
Unit 1, Ground floor, Siu Wai industrial Centre
29-33 Wing Hong Street & 68 King Lam Street, Cheung Sha Wan
Kowloon
Tel.: +852-27861706 / 27861741
Fax: +852-27858664

Hungary
GRUNDFOS South East Europe Kft.
Tópark u. 8
H-2045 Törökbálint
Tel.: +36-23 511 110
Fax: +36-23 511 111

India
GRUNDFOS Pumps India Private Limited
118 Old Mahabalipuram Road
Thoraipakkam
Chennai 600 097
Tel.: +91-44 2496 6800

Indonesia
PT GRUNDFOS Pompa
Graha intirub Lt. 2 & 3
Jln. Cililitan Besar No.454. Makasar, Jakarta Timur
ID-Jakarta 13650
Tel.: +62 21-469-51900
Fax: +62 21-460 6910 / 460 6901

Ireland
GRUNDFOS (Ireland) Ltd.
Unit A, Merrywell Business Park
Ballymount Road Lower
Dublin 12
Tel.: +353-1-4089 800
Fax: +353-1-4089 830

Italy
GRUNDFOS Pompe Italia S.r.l.
Via Gran Sasso 4
I-20060 Truccazzano (Milano)
Tel.: +39-02-95838112
Fax: +39-02-95309290 / 95838461

Japan
GRUNDFOS Pumps K.K.
1-2-3, Shin-Miyakoda, Kita-ku
Hamamatsu
431-2103 Japan
Tel.: +81 53 428 4760
Fax: +81 53 428 5005

Kazakhstan
Grundfos Kazakhstan LLP
7' Kyz-Zhibek Str., Kok-Tobe micr.
KZ-050020 Almaty Kazakhstan
Tel.: +7 (727) 227-98-55/56

Korea
GRUNDFOS Pumps Korea Ltd.
6th Floor, Aju Building 679-5
Yeoksam-dong, Kangnam-ku, 135-916
Seoul, Korea
Tel.: +82-2-5317 600
Fax: +82-2-5633 725

Latvia
SIA GRUNDFOS Pumps Latvia
Deglava biznesa centrs
Augusta Deglava ielā 60
LV-1035, Rīga,
Tel.: + 371 714 9640, 7 149 641
Fax: + 371 914 9646

Lithuania
GRUNDFOS Pumps UAB
Smolensko g. 6
LT-03201 Vilnius
Tel.: + 370 52 395 430
Fax: + 370 52 395 431

Malaysia
GRUNDFOS Pumps Sdn. Bhd.
7 Jalan Peguam U1/25
Glenmarie industrial Park
40150 Shah Alam, Selangor
Tel.: +60-3-5569 2922
Fax: +60-3-5569 2866

Mexico
Bombas GRUNDFOS de México S.A. de C.V.
Boulevard TLC No. 15
Parque industrial Stiva Aeropuerto
Apodaca, N.L. 66600
Tel.: +52-81-8144 4000
Fax: +52-81-8144 4010

Netherlands
GRUNDFOS Netherlands
Veluwezoom 35
1326 AE Almere
Postbus 22015
1302 CA ALMERE
Tel.: +31-88-478 6336
Fax: +31-88-478 6332
E-mail: info_gnl@grundfos.com

New Zealand
GRUNDFOS Pumps NZ Ltd.
17 Beatrice Tinsley Crescent
North Harbour Industrial Estate
Albany, Auckland
Tel.: +64-9-415 3240
Fax: +64-9-415 3250

Norway
GRUNDFOS Pumper A/S
Strømsveien 344
Postboks 235, Leirdal
N-1011 Oslo
Tel.: +47-22 90 47 00
Fax: +47-22 32 21 50

Poland
GRUNDFOS Pompy Sp. z o.o.
ul. Klonowa 23
Baranowo k. Poznania
PL-62-081 Przeźmierowo
Tel.: (+48-61) 650 13 00
Fax: (+48-61) 650 13 50

Portugal
Bombas GRUNDFOS Portugal, S.A.
Rua Calvet de Magalhães, 241
Apartado 1079
P-2770-153 Paço de Arcos
Tel.: +351-21-440 76 00
Fax: +351-21-440 76 90

Romania
GRUNDFOS Pompe România SRL
S-PARK BUSINESS CENTER, Clădirea A2, etaj 2
Str. Tipografilor, Nr. 11-15, Sector 1, Cod 013714
Bucuresti, Romania
Tel.: 004 021 2004 100
E-mail: romania@grundfos.ro

Serbia
Grundfos Srbija d.o.o.
Omladinskih brigada 90b
11070 Novi Beograd
Tel.: +381 11 2258 740
Fax: +381 11 2281 769
www.rs.grundfos.com

Singapore
GRUNDFOS (Singapore) Pte. Ltd.
25 Jalan Tukang
Singapore 619264
Tel.: +65-6681 9688
Faxax: +65-6681 9689

Slovakia
GRUNDFOS s.r.o.
Prievozská 4D 821 09 BRATISLAVA
Tel.: +421 2 5020 1426
sk.grundfos.com

Slovenia
GRUNDFOS LJUBLJANA, d.o.o.
Leskoškova 9e, 1122 Ljubljana
Tel.: +386 (0) 1 568 06 10
Fax: +386 (0)1 568 06 19
E-mail: tehnika-si@grundfos.com

South Africa
GRUNDFOS (PTY) LTD
16 Lascelles Drive, Meadowbrook Estate
1609 Germiston, Johannesburg
Tel.: (+27) 10 248 6000
Fax: (+27) 10 248 6002
E-mail: lgradidge@grundfos.com

Spain
Bombas GRUNDFOS España S.A.
Camino de la Fuentecilla, s/n
E-28110 Algete (Madrid)
Tel.: +34-91-848 8800
Fax: +34-91-628 0465

Sweden
GRUNDFOS AB
Box 333 (Lunnagårdsgatan 6)
431 24 Mölndal
Tel.: +46 31 332 23 000
Fax: +46 31 331 94 60

Switzerland
GRUNDFOS Pumpen AG
Bruggacherstrasse 10
CH-8117 Fällanden/ZH
Tel.: +41-44-806 8111
Fax: +41-44-806 8115

Taiwan
GRUNDFOS Pumps (Taiwan) Ltd.
7 Floor, 219 Min-Chuan Road
Taichung, Taiwan, R.O.C.
Tel.: +886-4-2305 0868
Fax: +886-4-2305 0878

Thailand
GRUNDFOS (Thailand) Ltd.
92 Chaloem Phrakiat Rama 9 Road
Dokmai, Pravej, Bangkok 10250
Tel.: +66-2-725 8999
Fax: +66-2-725 8998

Turkey
GRUNDFOS POMPA San. ve Tic. Ltd. Sti.
Gebze Organize Sanayi Bölgesi
Ihsan dede Caddesi
2. yol 200. Sokak No. 204
41490 Gebze/ Kocaeli
Tel.: +90 - 262-679 7979
Fax: +90 - 262-679 7905
E-mail: satis@grundfos.com

Ukraine
ТОВ "ГРУНДФОС УКРАЇНА"
Бізнес Центр Європа
Столичне шосе, 103
м. Київ, 03131, Україна
Tel.: (+38 044) 237 04 00
Fax: (+38 044) 237 04 01
E-mail: ukraine@grundfos.com

United Arab Emirates
GRUNDFOS Gulf Distribution
P.O. Box 16768
Jebel Ali Free Zone, Dubai
Tel.: +971 4 8815 166
Fax: +971 4 8815 136

United Kingdom
GRUNDFOS Pumps Ltd.
Grovebury Road
Leighton Buzzard/Beds. LU7 4TL
Tel.: +44-1525-850000
Fax: +44-1525-850011

U.S.A.
Global Headquarters for WU
856 Koomey Road
Brookshire, Texas 77423 USA
Phone: +1-630-236-5500

Uzbekistan
Grundfos Tashkent, Uzbekistan
The Representative Office of Grundfos Kazakhstan in Uzbekistan
38a, Oybek street, Tashkent
Tel.: (+998) 71 150 3290 / 71 150 3291
Fax: (+998) 71 150 3292

© 2025 Grundfos Holding A/S, all rights reserved.

Trademarks displayed in this material, including but not limited to Grundfos and the Grundfos logo, are registered trademarks owned by The Grundfos Group.

93381240 03. 2025

ECM: 1419364

GRUNDFOS Holding A/S
Poul Due Jensens Vej 7
DK-8850 Bjerringbro
Tel: +45 87 50 14 00
www.grundfos.com

GRUNDFOS