Installation and operating instructions

Hydro Solo-E, Hydro Solo-E Optimum

GRUNDFOS

Hydro Solo-E, Hydro Solo-E Optimum

English (GB)
Installation and operating instructions 4
Australian cyber security act 42

Original installation and operating instructions

Table of contents

1. General information 5
1.1 Hazard statements 5
1.2 Notes 5
1.3 Recommended safety equipment 6

2. Product introduction 6
2.1 Intended use of the product 6
2.2 Pumped liquids 6
2.3 Cybersecurity 7
2.4 Radio module 8
2.5 Battery. 8
2.6 Bluetooth 8
2.7 Identification. 9

3. Receiving the product. 11
3.1 Handling the product 11
3.2 Inspecting the product 12

4. Installation requirements 12
4.1 Installing the product in areas with high humidity 12
4.2 Location 12
4.3 System sizing 12

5. Mechanical installation 13
5.1 Mounting the product 13
5.2 Installing the pressure tank 13

6. Electrical connection 13
6.1 Protection against electric shock - indirect contact. 13
6.2 Cover for the power cables 14
6.3 Backup fuses 14
6.4 Additional protection 14
6.5 Overtemperature protection 15
6.6 Motor protection. 15
6.7 Protection against power supply voltage transients 15
6.8 Cable requirements 16
6.9 Functional modules 20
6.10 Installing a communication interface module 26

7. Startup 28

8. Control functions 29
8.1 Operating panel 29

9. Setting the product 32
9.1 Starting the pump 32
9.2 Stopping the pump 32
9.3 Resetting alarms and warnings in products with a standard operating panel . . 32
9.4 Setpoint setting 32
9.5 Working on the product 32

10. Servicing the product 33
10.1 Maintaining the pressure tank 35
10.2 Cleaning the product 35

11. Taking the product out of operation 35

12. Fault finding 36
12.1 Pump is not running. 36
12.2 Pump is not running. Red lights flashing on Grundfos Eye. 36
12.3 Unstable pump performance 36
12.4 Pump runs backwards when switched off . . 36

13. Technical data, single-phase and three-phase motors 37
13.1 Liquid temperatures. 37
13.2 Ambient temperature 37
13.3 Humidity 37
13.4 Installation altitude 37
13.5 Miscellaneous data 37
13.6 Supply voltage 38

14. Technical data, three-phase motors 39
14.1 Leakage current. 40
14.2 Accessories 41

15. Further product information 41

16. Disposing of the product 41

17. Document quality feedback 41

1. General information

This appliance shall not be used by children.

Children shall not play with the appliance.

Cleaning and user maintenance shall not be carried out by children.

Appliances can be used by persons with reduced physical, sensory, or mental capabilities, as well as persons with a lack of experience and knowledge. This requires that they are given supervision or instruction concerning the use of the appliance in a safe way and that they understand the hazards involved.

Read this document before you install the product. Installation and operation must comply with local regulations and accepted codes of good practice.

1.1 Hazard statements

The symbols and hazard statements below may appear in Grundfos installation and operating instructions, safety instructions and service instructions.

DANGER

Indicates a hazardous situation which, if not avoided, will result in death or serious personal injury.

WARNING

Indicates a hazardous situation which, if not avoided, could result in death or serious personal injury.

CAUTION

Indicates a hazardous situation which, if not avoided, could result in minor or moderate personal injury.

The hazard statements are structured in the following way:

SIGNAL WORD

Description of the hazard

Consequence of ignoring the warning

- Action to avoid the hazard.

1.2 Notes

The symbols and notes below may appear in Grundfos installation and operating instructions, safety instructions and service instructions.

Observe these instructions for explosion-proof products.

A blue or gray circle with a white graphical symbol indicates that an action must be taken.

A red or gray circle with a diagonal bar, possibly with a black graphical symbol, indicates that an action must not be taken or must be stopped.

If these instructions are not observed, it may result in malfunction or damage to the equipment.

Tips and advice that make the work easier.

1.3 Recommended safety equipment

We recommend the following safety equipment, when handling this product.

Wear safety shoes.

Wear protective gloves.

Wear safety glasses.

2. Product introduction

TM076248

Left to right: Hydro Solo-E Optimum, Hydro Solo-E

Hydro Solo-E Optimum

Hydro Solo-E Optimum is a fully-optimised package with constant-pressure control, flow estimation and plug-and-pump installation for immediate, always-optimised operation. The built-in display provides a real-time overview of booster set performance.

Hydro Solo-E

The Hydro Solo-E booster system is a turnkey solution enabling you to keep a constant pressure in your system at all times. Hydro Solo-E consists of a Grundfos CRE pump fitted with isolating valve, non-return valve, outlet pipe, pressure transmitter, pressure gauge and pressure tank. Hydro Solo-E is ready for operation on delivery.

2.1 Intended use of the product

Only use the product according to the specifications stated in the installation and operating instructions.

2.1.1 Intended use in the United Kingdom

The CIM module is not intended for use in any home appliance, home automation, home control system or consumer product in the UK.

2.2 Pumped liquids

The product is suitable for pumping clean, thin, non-aggressive and non-explosive liquids without any solid particles or fibres, such as:

- drinking or tap water
- rainwater and groundwater
- river and lake water
- boiler feed water and district heating water
- chlorinated water
- softened water.

Do not use the product for transfer of diesel oil or other oil-containing liquids. Sand and other impurities in the water can cause wear to the pump.

2.3 Cybersecurity

The product must only be connected to protected network subnets with strict access control.

According to the standard EN 18031-1:2024, the RJ45 connector used for connecting to IP networks is considered an exposed network interface, along with the GENIbus TCP protocol used on it, which is considered an exposed service.

2.3.1 Network interfaces and services

In the factory default state, the product exposes the following network interfaces:

Interface	Description
RJ45	Wired Ethernet / IP connectivity

The following services are exposed by the product over its network interfaces in the factory default state.

Interface	Service	Description
RJ45	GENIpro TCP	It is used for connecting the product to a service tool on an engineering workstation. Pairing is required before communication can take place. The GENIpro TCP pairing state is persistent.

2.4 Radio module

CAUTION
Radiation
Minor or moderate personal injury

- Locate the product at a minimum distance of 20 cm from any body parts. Human tissue may be heated by RF energy.

Installers and end-users must be provided with these installation and operating instructions and operating conditions to ensure compliance with RF exposure regulations.

The product incorporates a class 1 radio module for remote control. You can use the module anywhere in the EU without restrictions.

Via the built-in radio module, the product can communicate with other MGE motors.

The product contains a class 1 radio. Grundfos will support the product with security updates for at least 2 years from production of the unit.

2.5 Battery

A Li-ion battery is fitted in the FM310 and FM311 functional modules.

The Li-ion battery complies with the Battery Directive (2006/66/EC). The battery does not contain mercury, lead or cadmium.

WARNING
Intoxication or risk of chemical burn
Death or serious personal injury

- The battery can cause severe or fatal injuries in 2 hours or less if it is swallowed or placed inside any part of the body. In such an event, seek medical attention immediately.

- The replacement or servicing of batteries must be carried out by a qualified person.
- The battery contained within this product, whether new or used, is hazardous and is to be kept away from children.

2.6 Bluetooth

The product incorporates a Bluetooth (BLE) module for remote control. You can use the module anywhere in the EU without restrictions.

Via the built-in Bluetooth module, the product can communicate with Grundfos GO.

The product contains a Bluetooth (BLE) module. Grundfos will support the product with security updates for at least 2 years from production of the unit.

Bluetooth information

Frequency of operation	2400 - 2483.5 MHz
Modulation type	GFSK
Data rate	2 Mbps
Transmit power	5 dBm EIRP with internal antenna

GLoWpan information

Frequency of operation	2405-2480 MHz
Modulation type	GP O-QPSK
Data rate	1 Mbps
Transmit power	5 dBm EIRP with internal antenna

2.7 Identification

2.7.1 Type key

Example: Hydro Solo-E CRE 15-3 U8 A- A- A- A- ABCDE

Code	Explanation	Designation
Hydro Solo		Product name
E	E: The motor has a built-in frequency converter.	System type
CRE X-Y CRIE X-Y	CRE: Cast-iron and stainless-steel materials CRIE: Stainless-steel materials only X: Flow rate m^3/h Y: Number of impellers	Pump model
UM	3 × 380 - 500 V, PE, 50/60 Hz	Supply voltage
U2	3 × 380 - 415 V, PE, 50/60 Hz	
U7	1 × 200 - 240 V, PE, 50/60 Hz	
U8	1 × 200 - 240 V, N, PE, 50/60 Hz	
UX	Custom voltage rating (CSU variant)	
A	Standard range	Pump design
C	Optimum	
A	Electronic (frequency converter)	Starting method
A	Stainless-steel outlet manifold	Material combination
B	Stainless-steel outlet manifold and stainless steel inlet manifold	
C	Galvanised-steel manifold	
D	Galvanised-steel manifold and base frame	
X	Customised	
A	ACS-approved components	Drinking water approvals
B	Belgaqua-approved components	
D	DVGW-approved components	
K	KIWA-approved components	
N	NFS-approved components	
V	WRAS-approved components	
Y	No special approval	
A	Standard hydraulics	Option
B	Base frame	
C	Base frame with machine shoes	
D	Sensor as dry-running protection	
E	Pressure switch as dry-running protection	
F	Level switch for dry-running protection	
G	CIM included	
H	Without non-return valve	
L	Non-return valve on the inlet side	
M	Pressure gauge on the inlet side	
S	CSU variant	
U	Undersized motor	
X	More than five options	

2.7.2 Identification of the motor model

Identify the motor model by means of the nameplate on the terminal box.

Example: Model K

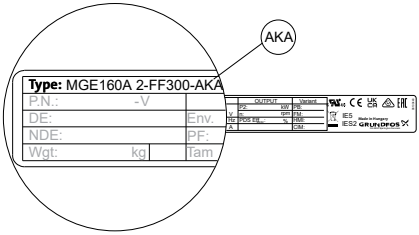

TM083907

2.7.3 Safe Torque Off (STO) function

The Safe Torque Off (STO) is a safety function to stop the motor from turning without actively braking it. It follows the definition by EN61800-5-2.

For instructions on how to activate and operate the Safe Torque Off (STO) function, read the following installation and operating instructions.

Safe Torque Off

Installation and operating instructions

http://net.grundfos.com/qr/i/92916582

2.7.3.1 Identification of the Safe Torque Off (STO) function

The version of the Safe Torque Off (STO) function is marked on the nameplate, after the product version number.

The Safe Torque Off (STO) functionality is only available for MGE motors having an STO version number.

The Safe Torque Off (STO) version number is shown below as **Szz**, where **zz** marks the version. For product without STO the **zz** segment will be blank.

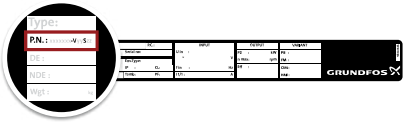

TM084339

The Safe Torque Off (STO) safety function cannot be retrofitted to older motors.

3. Receiving the product

3.1 Handling the product

DANGER
Overhead load
Death or serious personal injury

- When lifting the system, do not use the eyebolts of the motors.
- Do not lift the system by the manifolds.
- Do not stand on the manifolds.

WARNING
Overhead load
Death or serious personal injury

- Use appropriate lifting equipment when placing the system.
- Do not stand under or close to the load that is lifted. Comply with local regulations.

WARNING
Crushing of feet
Death or serious personal injury

- Before you lift, make sure that the lifting equipment is capable of lifting this load, which is listed on the nameplate and on the packaging label.

WARNING
Falling objects
Death or serious personal injury

- Use lifting equipment rated for the weight of the product.
- Wear personal protective equipment.
- Keep a safe distance to the product during lifting operations.

WARNING
Back injury
Death or serious personal injury

- Use lifting equipment and follow local regulations when lifting the product.

CAUTION
Sharp element
Minor or moderate personal injury

- Wear protective gloves.

When lifting the system, the lifting point must always be above the centre of gravity to ensure stability.

Observe local regulations concerning limits for manual lifting or handling. Calculate the total weight of the pump with the motor by adding the weights stated on the pump and motor nameplates. Use certified lifting gear suitable for the load. Each lifting strap must be at least 3 m long. Straps must be placed to ensure vertical pull to the system. Wind the safety strap around the pump head more than one time if there are no eyebolts or brackets on the pump. Keep the safety strap tight.

Do not lift the product by the terminal box.

3.2 Inspecting the product

On receipt of the product, do the following:

1. Check that the product is as ordered.

   If the product is not as ordered, contact the supplier.

2. Make sure that the supply voltage and frequency correspond to the values stated on the nameplate of the product.

4. Installation requirements

4.1 Installing the product in areas with high humidity

WARNING
Fire hazard
Death or serious personal injury

- In high humidity environments where condensation can occur, connect the product permanently to the mains supply and activate the standstill heating function.

Do not expose the product to UV radiation.

To avoid condensation, the drive must be continuously energised due to the application of heat, with interruptions such that cooling to the point of condensation does not occur.

1. Connect the product permanently to the mains supply. In areas with a high humidity, activate the built-in standstill heating function.

4.2 Location

Observe the instructions on intended use for your specific product regarding indoor and outdoor location.

The product must be positioned with sufficient space around. The temperature of the cooling air must not exceed 50 °C (122 °F).

4.3 System sizing

WARNING
Maximum system pressure exceeded
Death or serious personal injury

- The system in which Hydro Solo-E is incorporated must be designed for maximum pump pressure.

The default setting will not let the pump stop until the maximum pressure has been reached.

5. Mechanical installation

WARNING
Electric shock
Death or serious personal injury

- Switch off the power supply before you start any work on the product. Make sure that the power supply cannot be switched on accidentally.

The product must be installed in a location with access control to prevent unauthorized access to the product.

5.1 Mounting the product

WARNING
Crushing of feet
Death or serious personal injury

- Fasten the pump securely to a solid and even foundation according to the specifications in the installation and operating instructions for the pump.
- Follow the lifting instructions.

CAUTION
Radiation
Minor or moderate personal injury

- Locate the product at a minimum distance of 20 cm from any body parts. Human tissue may be heated by RF energy.

Installation-related work on the product must only be performed by qualified persons.

5.2 Installing the pressure tank

DANGER
Explosive environment
Death or serious personal injury

- Do not use the product if it is damaged.
- Adjust the precharge pressure in the tank to 70 % of the setpoint value.

Installation must be carried out by qualified persons and according to local regulations.

If the installation has been changed significantly, the user must test it according to the requirements of the Operational Safety Regulation before putting the product into operation.

6. Electrical connection

Check that the supply voltage and frequency correspond to the values stated on the nameplate.

WARNING
Electric shock
Death or serious personal injury

- Before making connections in the terminal box or breaker cabinet, make sure that the power supply has been switched off for at least 5 minutes. Make sure that the power supply cannot be switched on accidentally.
- The product must be connected to an external all-pole main switch according to local regulations.
- The product must be earthed and protected against indirect contact in accordance with local regulations.
- We recommend fitting the permanent installation with an earth leakage circuit breaker (ELCB) with a tripping current less than 30 mA.
- If the power cable is damaged, it must be replaced by the manufacturer, the manufacturer's service partner or a similarly qualified person.

All electrical connections must be carried out by qualified persons.

6.1 Protection against electric shock - indirect contact

WARNING
Electric shock
Death or serious personal injury

- Connect the product to protective earth and provide protection against indirect contact in accordance with local regulations. As the leakage current of 4 - 7.5 kW motors is greater than 3.5 mA, take extra precautions when earthing these motors.

Standards EN 50178 and BS 7671 specify the following precautions when the leakage current exceeds 3.5 mA:

- The pump must be stationary and permanently installed.
- The pump must be permanently connected to the power supply.
- The earth connection must be carried out as duplicate conductors.

Protective-earth conductors must always have a yellow and green (PE), or yellow and green, and blue (PEN) colour marking.

6.2 Cover for the power cables

Model K is equipped with a cover for the power cables.

The cover is attached to the insulation cover with 2 screws (2) and is equipped with 3 voltage measuring holes (1) for the respective phases (L1, L2, L3).

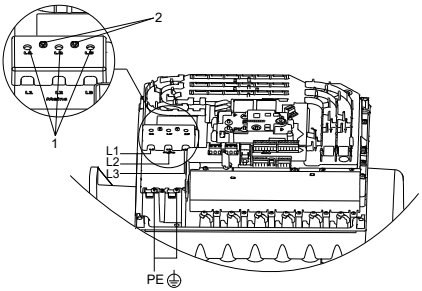

The cover for the power cables must be installed before switching on the product.

6.3 Backup fuses

See the section about recommended fuse sizes.

Related information

13.6.1 Recommended fuse sizes

14. Technical data, three-phase motors

6.4 Additional protection

If the pump is connected to an electrical installation where an earth leakage circuit breaker (ELCB) is used as additional protection, the circuit breaker must be marked with the following symbol:

This circuit breaker is type B.

The total leakage current of all the electrical equipment in the installation must be taken into account.

The leakage current of the motor in normal operation can be seen in the section Leakage current.

During start and at asymmetrical supply systems, the leakage current can be higher than normal and may cause the ELCB to trip.

Related information

14.1 Leakage current

6.4.1 Residual-current circuit breakers

WARNING
Electric shock
Death or serious personal injury

- This product can cause a DC current in the protective-earth conductor. If a residual current-operated protective (RCD) or monitoring (RCM) device is used for protection in case of direct or indirect contact, only an RCD or RCM of Type B is allowed on the supply side of this product.

The residual-current circuit breaker must be marked.

Take into account the total leakage current of all the electrical equipment in the installation.

This product may cause a direct current in the protective-earth conductor.

Connection example for single-phase supply

The figure shows an example of a mains-connected single-phase motor with a main switch, a backup fuse and a residual-current circuit breaker, type B.

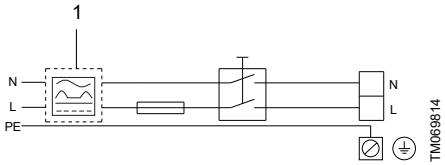

Pos.	Description
1	Residual-current circuit breaker, type B
N	Neutral
L	Phase
PE	Protective earth

Connection example for three-phase supply

The figure shows an example of a mains-connected three-phase motor with a main switch, a backup fuse and a residual-current circuit breaker, type B.

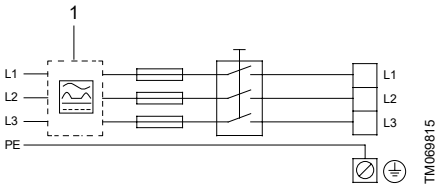

Pos.	Description
1	Residual-current circuit breaker, type B
L1	Phase 1
L2	Phase 2
L3	Phase 3
PE	Protective earth

6.5 Overtemperature protection

The motor is thermally protected by a temperature measurement in the drive. It can handle the lack of airflow over the motor in case the fan cover is blocked. It also means that the protection has a built-in memory retention.

The time from start to shutdown due to overtemperature is therefore always longer when starting at a motor temperature close to the ambient temperature compared with restarting after a shutdown due to overtemperature.

6.6 Motor protection

The product incorporates thermal protection against slow overloading and blocking. No external motor protection is required.

Model J: The product includes load- and speed-sensitive motor-overload protection.

Model K: The product includes load- and speed-sensitive motor-overload protection with thermal memory retention.

6.7 Protection against power supply voltage transients

The product is protected against power supply voltage transients in accordance with EN 61800-3.

6.8 Cable requirements

WARNING
Electric shock
Death or serious personal injury

- Switch off the power supply to the product including the power supply for the signal relays. Wait at least 5 minutes before you make any connections in the terminal box.
- Follow the wiring diagrams and local regulations.
- Use branch-circuit protection fuses.
- Comply with local regulations as to cable cross-sections.
- Use the recommended fuse size.
- Connect the cables to terminals by applying the recommended tightening torque.

WARNING
Fire hazard
Death or serious personal injury

- Comply with local regulations as to cable cross-sections.
- Use the recommended fuse size.
- Connect the cables to terminals by applying the recommended tightening torque.

Make sure that the cables are secured with cable glands providing strain relief.

6.8.1 Cable cross-section data for MGE motors

DANGER
Electric shock
Death or serious personal injury

- Always comply with local regulations regarding cable cross-sections.

1 × 200-230 V

Power [kW]	Conductor type	Cross section	
		[mm²]	[AWG]
0.25 - 1.5	Solid	1.5 - 2.5	16-12
	Stranded	1.5 - 2.5	16-12

3 × 380-500 V, 50/60 Hz, Model J

Speed [rpm]	Power P2 [kW]	Supply voltage [V]	Nominal current [A]	Cable cross-section [mm²]	Cable cross-section [AWG]
1450-2200	2.2	3 × 380-500	4.3 - 3.6	1.5	14
	3.0	3 × 380-500	5.8 - 4.6	1.5	14
	4.0	3 × 380-500	7.7 - 6.0	2.5	14
	5.5	3 × 380-500	10.5 - 8.4	2.5	14
	7.5	3 × 380-500	14.1 - 11.1	4	12
2900-4000	3.0	3 × 380-500	5.8 - 4.6	1.5	14
	4.0	3 × 380-500	7.7 - 6.0	2.5	14
	5.5	3 × 380-500	10.5 - 8.4	2.5	14
	7.5	3 × 380-500	14.1 - 11.1	4	12
	11.0	3 × 380-500	20.3 - 16.0	6	10

3 × 200-240 V, 50/60 Hz, Model J

Speed [rpm]	Power P2 [kW]	Supply voltage [V]	Nominal current [A]	Cable cross-section [mm²]	Cable cross-section [AWG]
3400-4000	2.2	3 × 200-240	7.8 - 6.5	2.5	14
	3	3 × 200-240	10.5 - 8.8	2.5	14
	4	3 × 200-240	14.1 - 11.8	4	12
	5.5	3 × 200-240	19.6 - 16.3	6	10

3 × 380-480 V, 50/60 Hz, Model K

Speed [rpm]	Power P2 [kW]	Supply voltage [V]	Nominal current [A]	Cable cross-section [mm^2]	Cable cross-section [AWG]
1450-2200	11	3 × 380-480	20.2 - 16.4	6	10

6.8.2 Three-phase connections

The cables in the terminal box must be as short as possible. However, the separated protective-earth conductor must be so long that it is the last one to be disconnected in case the cable is inadvertently pulled out of the cable entry.

Model J: To avoid loose connections, ensure that the terminal block for L1, L2 and L3 is pressed home in its socket when the power cable has been connected.

Model K: To avoid loose connections, ring terminals must be used. Ensure that ring terminals are short enough to stay within the terminal cover.

Check that the supply voltage and frequency correspond to the values stated on the nameplate.

Power supply connection on a three-phase product

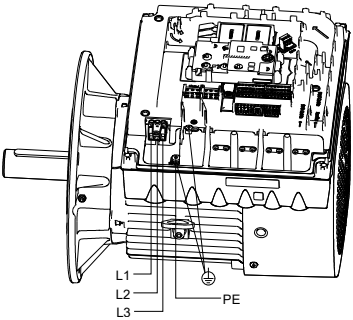

TM084037

Model J

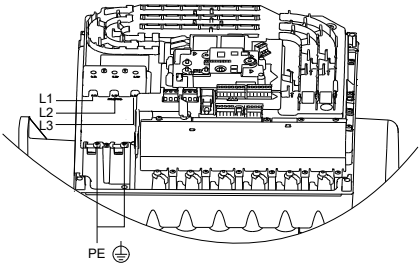

TM082860

Model K

Pos.	Description
L1	Phase 1
L2	Phase 2
L3	Phase 3
PE	Protective earth

6.8.3 Single-phase connections

1 × 200-240 V-10 % / +10 %, 50/60 Hz, PE

Make sure the supply voltage and frequency correspond to the values stated on the nameplate.

! If you want to supply the motor through an IT network, make sure you have a suitable motor variant. If you are in doubt, contact Grundfos.

The wires in the motor terminal box must be as short as possible. Excepted from this is the separated earth conductor which must be so long that it is the last one to be disconnected in case the cable is inadvertently pulled out of the cable entry.

For maximum backup fuse, see the section on supply voltage.

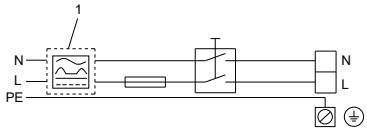

TM078919

Example of a mains-connected motor with a main switch, backup fuse and additional protection

Pos.	Description
1	RCD, type B

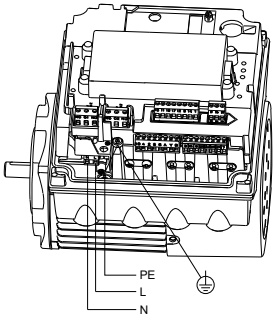

TM053494

Mains connection, single-phase motors

Related information

13.6 Supply voltage

6.8.4 Conductors

Conductor types

Model J: Use stranded or solid copper conductors only.

Model K: Use stranded copper conductors only.

Conductor temperature ratings

Model J: Use minimum 60 °C (140 °F) copper conductors.

Model K: Use minimum 75 °C (167 °F) copper conductors. The wire sizes for the mains supply must be sized for a wire size which is suitable for at least 125 % of the rated input current of the motor drive units.

6.8.5 Cable glands

It is recommended to use a cable gland M20 or M40 as applicable with IP 66 rating and suitable for cable strain relief.

After installation, all M20 openings must be closed by means of the delivered blind plugs to maintain the IP 55/66 rating.

6.9 Functional modules

The functional modules are different types of add-on boards containing various types of input and output terminals for the user to connect different types of sensors, for example switches and relays.

The product can only contain one functional module at the time.

The following functional modules are available:

- FM110
- FM310
- FM311 [1)]

1) Without Bluetooth (BLE).

The selection of module depends on the application and the required number of inputs and outputs.

6.9.1 Functional module, FM110

Inputs and outputs

The module has these connections:

- two analog inputs
- two digital inputs or one digital input and one open-collector output
- Grundfos Digital Sensor input and output
- one signal relay output
- GENIbus/Modbus connection
- two Safe Torque Off (STO) inputs
- Bluetooth (BLE) connection.

Signal relay 1

LIVE: You can connect supply voltages up to 250 VAC to the output.

SELV: The output is galvanically separated from other circuits. Therefore, you can connect the supply voltage or safety extra-low voltage to the output as desired.

WARNING
Electric shock
Death or serious personal injury

- When using signal relay 1, make sure that the wires to be connected to the relays below are separated from each other by reinforced insulation in their entire lengths.

The inputs and outputs are internally separated from the mains-conducting parts by reinforced insulation and galvanically separated from other circuits. All control terminals are supplied with safety extra-low voltage (SELV), ensuring protection against electric shock.

Cables for the relays must be double insulated or reinforced and rated at least 250 V / 2 A.

The Ethernet cable must be rated at least Cat5e/Cat6 with screening.

The 250 V contacts of the alarm relays of these devices must not be connected directly to the mains supply, but energised by an isolated power supply or transformer with galvanic isolation.

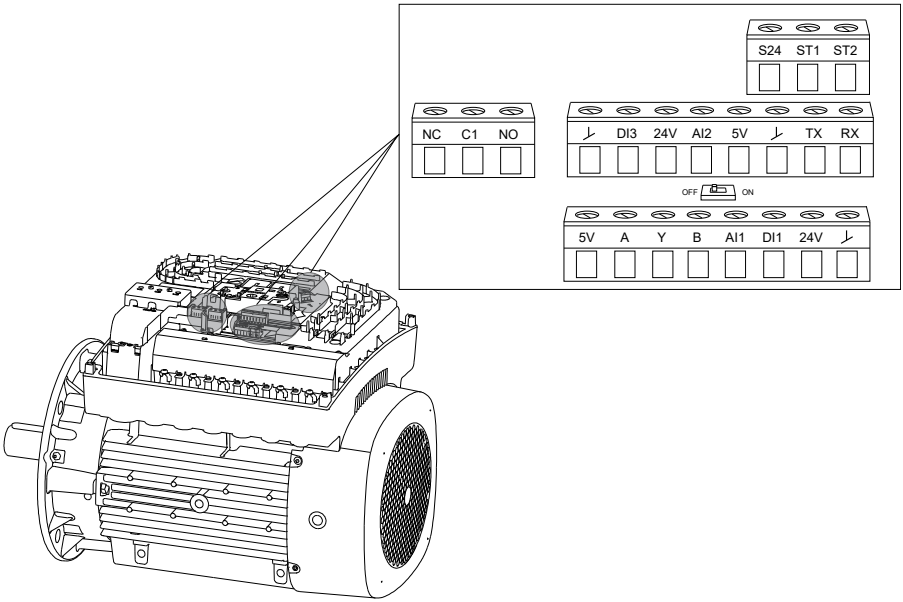

Model K

Terminal	Type	Function
NC	Normally closed contact	Signal relay 1: LIVE or SELV
C1	Common	
NO	Normally open contact	
GND	GND	Signal ground
DI3	DI3/OC1	Digital input/output, configurable Open collector: Maximum 24 V resistive or inductive
24V	+24 V	Power supply
AI2	AI2	Analog input: • 0-20 mA or 4-20 mA • 0.5 - 3.5 V, 0-5 V or 0-10 V.
5V	+5 V	Power supply to a potentiometer or sensor
GND	GND	Signal ground
TX	GDS TX	Grundfos Digital Sensor output
RX	GDS RX	Grundfos Digital Sensor input
5V	+5 V	Power supply to a potentiometer or sensor
A	GENIbus, A	GENIbus, A (+) / Modbus, D1 (+)
Y	GENIbus, Y	GENIbus, GND / Modbus, GND
B	GENIbus, B	GENIbus, B (-) / Modbus, D0 (-)

Terminal	Type	Function
AI1	AI1	Analog input: • 0-20 mA or 4-20 mA • 0.5 - 3.5 V, 0-5 V or 0-10 V.
DI1	DI1	Digital input, configurable Digital input 1 is factory-set to be start or stop input where an open circuit results in stop. A jumper has been factory-fitted between terminals DI1 and GND. Remove the jumper if digital input 1 is to be used as external start or stop or any other external function.
24V	+24 V	Power supply
GND	GND	Signal ground
S24	+24 V (STO)	Power supply to the Safe Torque Off inputs
ST1	STO1	Safe Torque Off - Input 1
ST2	STO2	Safe Torque Off - Input 2

6.9.2 Functional module, FM310 and FM311

Inputs and outputs

The FM311 functional module does not include Bluetooth connection.

The module has these connections:

- three analog inputs
- one analog output
- two dedicated digital inputs
- two configurable digital inputs or open-collector outputs
- Grundfos Digital Sensor input and output
- two Pt100/1000 inputs
- two LiqTec sensor inputs
- two signal relay outputs
- GENIbus/Modbus connection
- two Safe Torque Off (STO) inputs
- Ethernet connection
- Bluetooth (BLE) connection. [2)]

2) FM311 is without Bluetooth.

Signal relay 1

LIVE: You can connect supply voltages up to 250 VAC to the output.

SELV: The output is galvanically separated from other circuits. Therefore, you can connect the supply voltage or safety extra-low voltage to the output as desired.

Signal relay 2

SELV: The output is galvanically separated from other circuits. Therefore, you can connect the supply voltage or safety extra-low voltage to the output as desired.

Connection terminals for inputs and outputs

WARNING
Electric shock
Death or serious personal injury

- When using signal relay 1 or 2, make sure that the wires to be connected to the relays below are separated from each other by reinforced insulation in their entire lengths.

The inputs and outputs are internally separated from the power supply-conducting parts by reinforced insulation and galvanically separated from other circuits. All control terminals are supplied with safety extra-low voltage (SELV), ensuring protection against electric shock.

Cables for the relays must be double insulated or reinforced and rated at least 250 V / 2 A.

The Ethernet cable must be rated at least Cat5e/Cat6 with screening.

The 250 V contacts of the alarm relay (NC/C1/NO) on the functional modules FM310 and FM311 must not be connected directly to the mains supply, but energised by an isolated power supply or transformer with galvanic isolation.

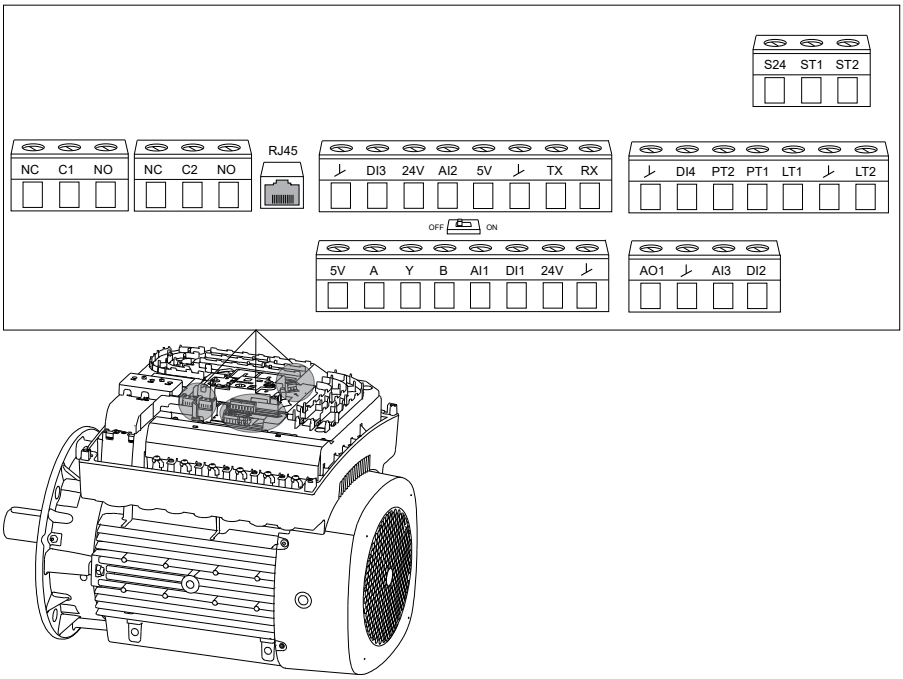

Model J

Terminal	Type	Function
NC	Normally closed contact	Signal relay 1: LIVE or SELV
C1	Common	
NO	Normally open contact	
NC	Normally closed contact	Signal relay 2: SELV only
C2	Common	
NO	Normally open contact	
RJ45	Ethernet	Ethernet communication
GND	GND	Signal ground
DI3	DI3/OC1	Digital input/output, configurable Open collector: Maximum 24 V resistive or inductive
24V	+24 V	Power supply
AI2	AI2	Analog input: • 0-20 mA or 4-20 mA • 0.5 - 3.5 V, 0-5 V or 0-10 V.
5V	+5 V	Power supply to a potentiometer or sensor
GND	GND	Signal ground

Terminal	Type	Function
TX	GDS TX	Grundfos Digital Sensor output
RX	GDS RX	Grundfos Digital Sensor input
GND	GND	Signal ground
DI4	DI4/OC2	Digital input/output, configurable Open collector: Maximum 24 V resistive or inductive
PT2	Pt100/1000 input 2	Pt100/1000 sensor input 2
PT1	Pt100/1000 input 1	Pt100/1000 sensor input 1
LT1	LiqTec sensor input 1	LiqTec sensor input 1 White conductor
GND	GND	Signal ground Brown and black conductors
LT2	LiqTec sensor input 2	LiqTec sensor input 2 Blue conductor
5V	+5 V	Power supply to a potentiometer or sensor
A	GENIbus, A	GENIbus, A (+) / Modbus, D1 (+)
Y	GENIbus, Y	GENIbus, GND / Modbus, GND
B	GENIbus, B	GENIbus, B (-) / Modbus, D0 (-)
AI1	AI1	Analog input: • 0-20 mA or 4-20 mA • 0.5 - 3.5 V, 0-5 V or 0-10 V.
DI1	DI1	Digital input, configurable Digital input 1 is factory-set to be start or stop input where an open circuit results in stop. A jumper has been factory-fitted between terminals DI1 and GND. Remove the jumper if digital input 1 is to be used as external start or stop or any other external function.
24V	+24 V	Power supply
GND	GND	Signal ground
AO1	AO	Analog output: • 0-20 mA or 4-20 mA • 0-10 V.
GND	GND	Signal ground
AI3	AI3	Analog input: • 0-20 mA or 4-20 mA • 0.5 - 3.5 V, 0-5 V or 0-10 V.
DI2	DI2	Digital input, configurable
S24	+24 V (STO)	Power supply to the Safe Torque Off inputs
ST1	STO1	Safe Torque Off - Input 1
ST2	STO2	Safe Torque Off - Input 2

6.10 Installing a communication interface module

WARNING
Electric shock
Death or serious personal injury

- Switch off the power supply to the product including the power supply for the signal relays. Wait at least 5 minutes before you make any connections in the terminal box. Make sure that the power supply cannot be switched on accidentally.

Use an antistatic service kit when handling electronic components. This prevents static electricity from damaging the components.

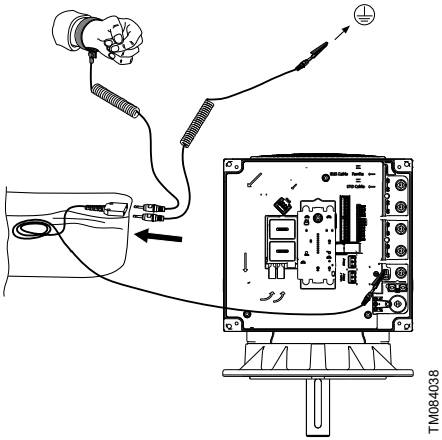

Using an antistatic service kit, shown on a Model J motor

1. Loosen the four screws on the terminal box cover.
2. Remove the terminal box cover.
3. Remove the CIM (Communication Interface Module) cover (C1) by pressing the locking tab (D) and lifting the end of the cover (C2). Then lift the cover off the hooks (C3).

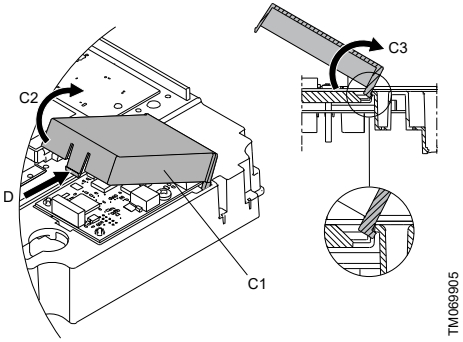

Removing the CIM cover, shown on a Model J motor

4. Remove the screw (E).

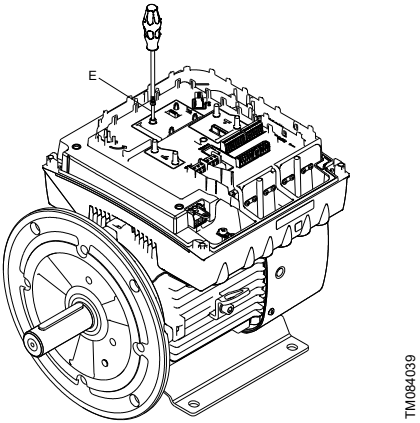

Removing the screw, shown on a Model J motor

5. Fit the module by aligning it with the three plastic holders (F) and the connection plug (G). Press the module home, using your fingers.

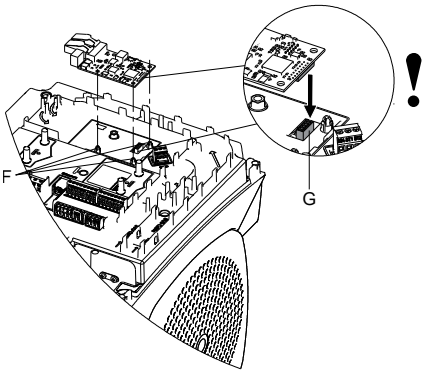

TM084040

Fitting the module, shown on a Model J motor

6.

7. Make the electrical connections to the module as described in the instructions supplied with the module.

8. Connect the cable screens of the bus cables to ground via one of the earth clamps (H).

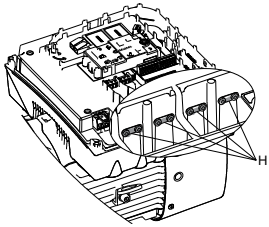

TM084041

Model J motor

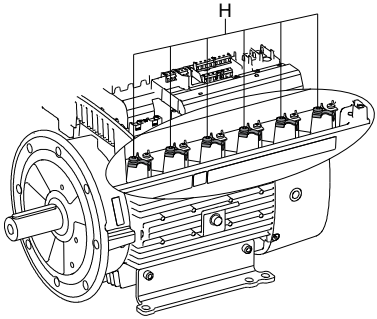

TM082868

Model K motor

9. Route the wires for the module through one of the cable glands.

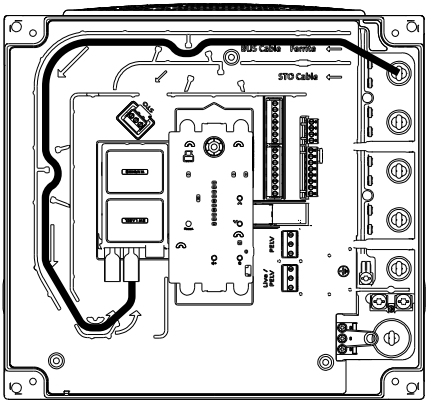

TM084042

Routing the wires through a cable gland, shown on a Model J motor

10. Fit the CIM cover.

11. If the module is supplied with an FCC label, fix the label on the terminal box.

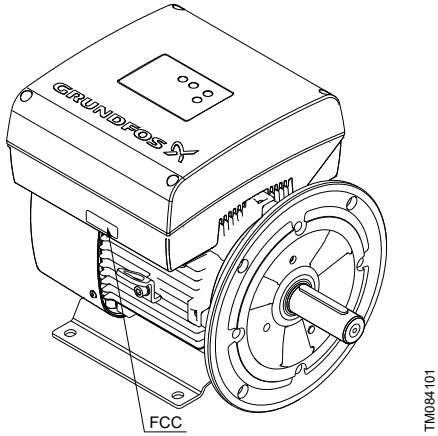

FCC label placement, shown on a Model J motor

12.

Make sure that the terminal box cover is aligned with the orientation of the operating panel.

7. Startup

Do not start the pump until it has been filled with liquid.

WARNING
Rotating parts
Death or serious personal injury

- Make sure to install the coupling guards before switching on the product.

CAUTION
Cold surface
Minor or moderate personal injury

- Make sure that no one can accidentally come into contact with cold surfaces. Wear protective gloves.

CAUTION
Hot surface
Minor or moderate personal injury

- Do not touch the product while it is running.

Hydro Solo-E Optimum

For more information on product startup, scan the QR code to access the quick guide:

http://net.grundfos.com/qr/i/99838821

Hydro Solo-E

For more information on product startup, scan the QR code to access the quick guide:

http://net.grundfos.com/qr/i/98475844

8. Control functions

8.1 Operating panel

8.1.1 Hydro Solo-E

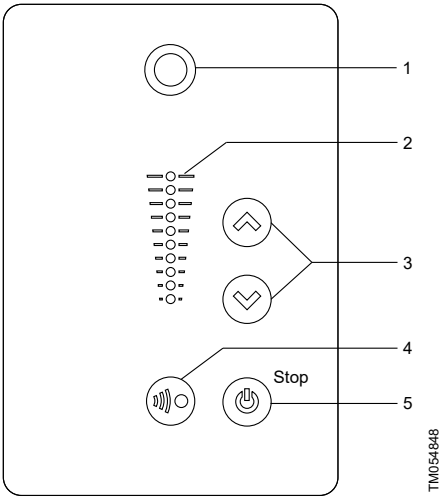

Pos.	Symbol	Description
1		**Grundfos Eye:** The indicator light shows the operating status of the product.
2	-	Light fields for setpoint indication.
3		**Up**/**Down**: The buttons change the setpoint.
4		**Radio communication**: The button enables radio or Bluetooth communication with Grundfos GO and other products of the same type.
5		**Start**/**Stop**: Press the button to make the product mandatory-ready for operation or to start and stop the product. **Start**: If you press the button when the product is stopped, the product starts if no other functions with higher priority have been enabled. **Stop**: If you press the button when the product is running, the product always stops. When you press the button, the stop icon appears at the bottom of the display.

8.1.2 Hydro Solo-E Optimum

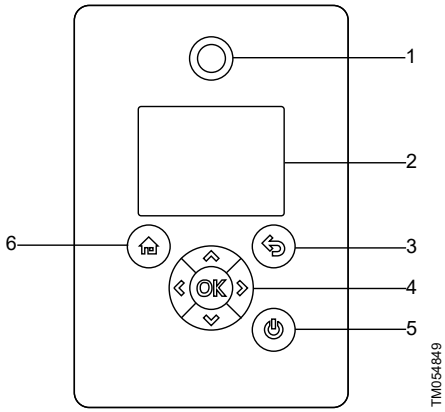

Pos.	Symbol	Description
1		**Grundfos Eye:** The indicator light shows the operating status of the product.
2	-	Graphic colour display.
3		**Back**: Press the button to go one step back.

Pos.	Symbol	Description
		Left/**Right**: Press the buttons to navigate between main menus, displays and digits. When you change the menu, the display shows the top display of the new menu.
		Up/**Down**: Press the buttons to navigate between submenus or change the value settings. If you have disabled the possibility to make settings with the **Enable/ disable settings** function, you can enable it again temporarily by pressing these buttons simultaneously for at least 5 seconds.
4	OK	**OK**: Press the button to do the following: • Save changed values, reset alarms and expand the value field. • Enable radio communication with Grundfos GO and other products of the same type. When you try to establish radio communication between the product and Grundfos GO or another product, the green indicator light in Grundfos Eye flashes. In the controller display, a note states that a wireless device wants to connect to the product. Press **OK** on the product operating panel to allow radio communication with Grundfos GO and other products of the same type.
5		**Start/Stop**: Press the button to make the product mandatory-ready for operation or to start and stop the product. **Start**: If you press the button when the product is stopped, the product starts if no other functions with higher priority have been enabled. **Stop**: If you press the button when the product is running, the product always stops. When you press the button, the stop icon appears at the bottom of the display.
6		**Home**: Press the button to go to the **Home** menu.

8.1.2.1 Home display

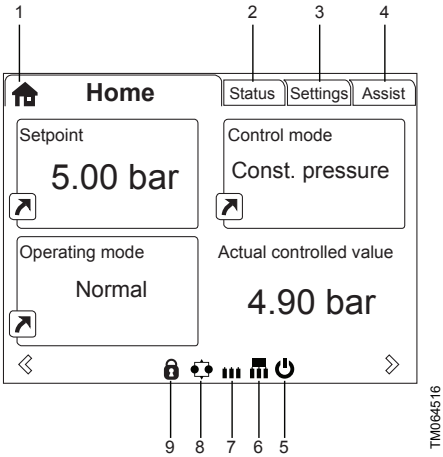

Pos.	Symbol	Description
1		**Home**: This menu shows up to four user-defined parameters. You can access each parameter directly from this menu.
2	-	**Status**: This menu shows the status of the product and system, warnings and alarms.
3	-	**Settings**: This menu gives access to all setting parameters. The menu also allows you to make detailed settings.
4	-	**Assist**: This menu enables assisted setup, provides a short description of the control modes and offers fault-finding advice.
5		**Start/Stop**: The icon indicates that the product was stopped with the **Start/Stop** button.
6		**Master:** The icon indicates that the product is functioning as the master in a system with products of the same type and size.

Pos.	Symbol	Description
7		**Slave:** The icon indicates that the product is functioning as a slave in a system with products of the same type and size.
8		**Multioperation:** The icon indicates that the product is operating in a system with products of the same type and size.
9		**Lock:** The icon indicates that the possibility to make settings has been disabled for protective reasons.

8.1.3 User interfaces

WARNING
Hot surface
Death or serious personal injury

- Touch only the buttons on the operating panel. The product may be very hot.

WARNING
Electric shock
Death or serious personal injury

- If the operating panel is cracked or perforated, replace it immediately. Contact the nearest Grundfos sales company.

8.1.4 Grundfos GO

CAUTION
Radiation
Minor or moderate personal injury

- Locate the product at a minimum distance of 20 cm from any body parts. Human tissue may be heated by RF energy.

Installers and end-users must be provided with these installation and operating instructions and operating conditions to ensure compliance with RF exposure regulations.

The product is designed for wireless communication with Grundfos GO using Bluetooth (BLE).

Grundfos GO enables you to set functions and gives you access to status overviews, technical product information and current operating parameters.

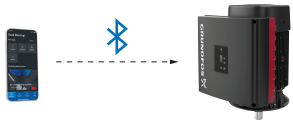

TM087682

9. Setting the product

9.1 Starting the pump

How you start the pump depends on how it was stopped.

Start the pump in one of the following ways:

- If the pump was stopped by pressing the **Start/Stop** button, start the pump by pressing the **Start/Stop** button.
- If the pump was stopped by pressing and holding the **Down** button, start the pump by pressing and holding the **Up** button.

9.2 Stopping the pump

Stop the pump in one of the following ways:

- Press the **Start/Stop** button.
- Press and hold the **Down** button until all light fields are off.
- Use the Grundfos GO.
- Use a digital input set to **External stop**.

9.3 Resetting alarms and warnings in products with a standard operating panel

You can reset a fault indication in one of the following ways:

- Briefly press the **Up** or **Down** button.
  This is not possible if the buttons have been locked.

  This does not change the setting of the motor.
- Switch off the power supply until the indicator lights are off.
- Switch the external start and stop input off, and then on again.
- Use the Grundfos GO.
- Use the digital input if you have set it to **Alarm resetting**.

9.4 Setpoint setting

The setpoint must not be set higher than the pressure which the pump can deliver.

Set the desired setpoint of the pump by pressing **Up** or **Down**.

The light fields on the operating panel will indicate the selected setpoint.

As shown in the figure below, the maximum setpoint is 10 bar. However, not all Hydro Solo-E systems can deliver a pressure of 10 bar. This means that the setpoint must not be set higher than the pressure which the pump can deliver.

The maximum setpoint can be calculated as follows:

$SP_{max} \leq H_{max} \times 0.1 + p_{inlet}$

SP_{max} = maximum setpoint

H_{max} = maximum head (see pump nameplate)

p_{inlet} = inlet pressure.

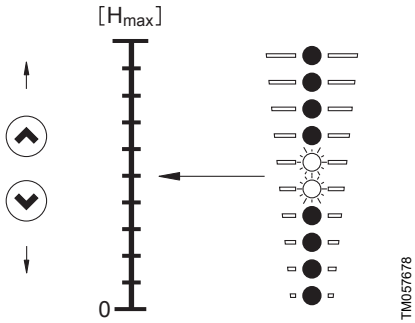

Setpoint set to 5 bar, constant-pressure control mode

9.5 Working on the product

WARNING
Electric shock
Death or serious personal injury

- Before fitting add-on modules, making connections in the terminal box or breaker cabinet or starting fault finding, make sure that the power supply has been switched off for at least 5 minutes. Make sure that the power supply cannot be switched on accidentally.

9.5.1 Megging

Megging of an installation incorporating MGE motors is not allowed as the built-in electronics may be damaged.

10. Servicing the product

WARNING
Electric shock
Death or serious personal injury

- Switch off the power supply to the product including the power supply for the signal relays. Wait at least 5 minutes before you make any connections in the terminal box. Make sure that the power supply cannot be switched on accidentally.
- Tighten the cable glands to the recommended torques.
- For measuring power supply voltage, use the measuring points accessible through the holes on the cover for power cables.
- Follow the instructions in the service instructions for the motor. If parts are damaged, order new service kits.
- Connect the motor to protective earth and provide protection against indirect contact in accordance with local regulations.
- After servicing the motor, a dielectric strength test must be performed. Alternatively, a megger can be used at 500 VDC.

WARNING
Rotating parts
Death or serious personal injury

- Stay clear of the product after switching on power, as the shaft can rotate immediately.
- Do not start up and run the motor if there is no pump connected to it.
- Install the coupling guards securely to the pump with the screws intended for this purpose.
- Tighten the coupling screws to the correct torque.

WARNING
Magnetic field
Death or serious personal injury

- Do not handle the motor or rotor if you have a pacemaker.

WARNING
Crushing of hands
Death or serious personal injury

- Follow the instructions in the service instructions for the motor.
- Wear protective gloves when servicing the product.
- Be careful when handling magnetised parts to avoid personal injury.

WARNING
Falling objects
Death or serious personal injury

- Follow the lifting instructions for the product.
- Use lifting equipment rated for the weight of the product.

WARNING
Back injury
Death or serious personal injury

- Use lifting equipment and follow local regulations when lifting the product.

WARNING
Crushing of feet
Death or serious personal injury

- Wear safety shoes.
- When lifting the motor, attach lifting equipment to the eye bolts fitted to the motor. When lifting the terminal box, attach lifting equipment to the eye bolts or lifting brackets fitted to the terminal box.

WARNING
Hot surface
Death or serious personal injury

- Do not touch the product while it is running. Allow surfaces to cool before servicing.

WARNING
Intoxication or risk of chemical burn
Death or serious personal injury

- The battery can cause severe or fatal injuries in 2 hours or less if it is swallowed or placed inside any part of the body. In such an event, seek medical attention immediately.

- The replacement or servicing of batteries must be carried out by a qualified person.
- The battery contained within this product, whether new or used, is hazardous and is to be kept away from children.

CAUTION
Cold surface
Minor or moderate personal injury

- Make sure that no one can accidentally come into contact with cold surfaces. Wear protective gloves.

Do not remove the rotor from the motor.

Make sure to fill the pump with water before the power is switched on. Follow the instructions for the pump.

10.1 Maintaining the pressure tank

To ensure optimal performance and long pump life, check the precharge pressure in the built-in pressure tank once a year and adjust to correct value, if required. To adjust the precharge pressure, do the following:

1. Stop the pump by pressing the **Stop** button. Observe that the LED turns yellow.
2. Open a tap to allow the water to run out in order to release all pressure from the system.

   The tap must remain open until the tank precharge pressure has been adjusted.
3. Without using tools, remove the cap from the pressure tank valve.
4. Adjust the precharge pressure in the tank to 70 % of the setpoint value.
5. Return the cap to the pressure tank valve. Make sure the cap is fully tight.
6. Start the pump again.
7. Close the tap.

10.2 Cleaning the product

WARNING
Electric shock
Death or serious personal injury

- Switch off the power supply to the product including the power supply for the signal relays. Make sure that the power supply cannot be switched on accidentally.
- Check that the terminal box cover is intact before spraying water or chemicals on the product.
- Cleaning must be done with non-aggressive materials to avoid damage to surfaces and labels.
- Make sure that the air inlets are kept clean and free of residuals.

Do not expose the product to high-pressure water jets.

To clean the motor, follow the procedure below:

1. Let the motor cool down first to avoid condensation.
2. Spray it with cold water, and use only non-aggressive cleaning materials.

11. Taking the product out of operation

WARNING
Electric shock
Death or serious personal injury

- Switch off the power supply and make sure that it cannot be accidentally switched on. The power supply must be switched off for at least five minutes before you start working on the product.

WARNING
Back injury
Death or serious personal injury

- Use lifting equipment and follow local regulations when lifting the product.

The lifting eyes on the motor can be used for lifting the pump as well.

12. Fault finding

WARNING
Electric shock
Death or serious personal injury
- Switch off the power supply before you start any work on the product. Make sure that the power supply cannot be switched on accidentally.

12.1 Pump is not running.

Pump is not running.

No lights in the Grundfos Eye.

TM063804

Cause	Remedy
Power supply failure.	Switch on power supply. Check cables and cable connections for defects and loose connections.
Fuses blown.	Check cables and cable connections for defects, and replace the fuses.

12.2 Pump is not running. Red lights flashing on Grundfos Eye.

Pump is not running.

Two opposite red indicator lights flashing simultaneously, which indicates an alarm. The motor is stopped.

TM053839

Cause	Remedy
Sensor is defective.	Replace sensor.

12.3 Unstable pump performance

Pump performance is unstable. No lights on Grundfos Eye.

TM063804

Cause	Remedy
Pump inlet pressure too low.	• Check the inlet conditions of the pump.
The inlet pipe is partly blocked by impurities.	• Remove and clean the inlet pipe.
Leakage in the inlet pipe.	• Remove and repair the inlet pipe.
Air in the inlet pipe or the pump.	• Vent the inlet pipe or the pump. • Check the inlet conditions of the pump.
The foot or non-return valve is blocked in closed position.	• Remove and clean, repair or replace the valve.

12.4 Pump runs backwards when switched off

Pump runs backwards when switched off. No lights on Grundfos Eye.

TM063804

Cause	Remedy
Leakage in the inlet pipe.	• Remove and repair the inlet pipe.
Non-return valve is defective.	• Remove and clean, repair or replace the valve.
Foot valve is blocked in completely or partly open position.	• Remove and clean, repair or replace the valve.

13. Technical data, single-phase and three-phase motors

13.1 Liquid temperatures

Liquid temperature: 0-50 °C (32-122 °F)

13.2 Ambient temperature

13.2.1 Ambient temperature during storage and transportation

Description	Temperature
Minimum	-30 °C (-22 °F)
Maximum	60 °C (140 °F)

13.2.2 Ambient temperature during operation

Model J

Description	3 × 200−240 V	3 × 380−500 V [3]
Minimum	0 °C (32 °F)	0 °C (32 °F)
Maximum	40 °C (104 °F)	50 °C (122 °F)

[3] Continuous operation at higher temperatures reduces the expected product lifetime. If the motor operates at ambient temperatures between 50 and 60 °C, select an oversized motor. Contact Grundfos for further information.

Model K

Description	3 × 200-240 V	3 × 380-480 V 3 × 440-480 V
Minimum	0 °C (32 °F)	0 °C (32 °F)
Maximum	40 °C (104 °F)	50 °C (122 °F)

13.3 Humidity

Description	Percentage
Maximum humidity	95 %

If you install the motor in moist surroundings or areas with a high humidity, ensure that the bottom drain hole is open. As a result, the motor becomes self-venting, allowing water and humid air to escape. When you open the drain hole, the enclosure class of the motor will be lower than standard.

13.4 Installation altitude

The installation altitude is the height above sea level of the installation site.

Products installed up to 1000 m above sea level can be loaded 100 %.

- **Model J:** The product is not suitable for use on corner earthed grids in installations more than 2000 m above sea level.
- **Model K:** The product is not suitable for use on corner earthed grids.

  The motors can be installed up to 3500 m above sea level.

Products installed more than 1000 m above sea level must not be fully loaded due to the low density and consequent low cooling effect of the air.

The motor output power (P2) in relation to the altitude above sea level is shown in the graph.

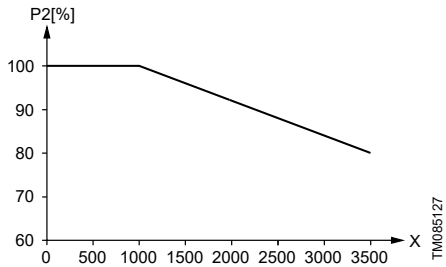

Pos.	Description
P2	Motor output power [%]
X	Altitude [m]

13.5 Miscellaneous data

Enclosure class	Pump: IP55 Sensor: IP44
Insulation class	F

13.6 Supply voltage

- 1 × 200-240 V -10 % / +10 %, 50/60 Hz, -2 % / +2 % PE
- 3 × 380-415 V -10 % / +10 %, 50/60 Hz, -2 % / +2 % PE
- 3 × 380-500 V -10 % / +10 %, 50/60 Hz, -2 %/ +2 % PE

Cable: Maximum 10 mm^2 or 8 AWG.

Use minimum 70 °C copper conductors only.

Check that the supply voltage and frequency correspond to the values stated on the nameplate.

Related information

6.8.3 Single-phase connections

13.6.1 Recommended fuse sizes

Motor sizes from 15 to 22 kW: Maximum 80 A.

Standard, as well as quick-blow or slow-blow fuses, may be used.

Related information

6.3 Backup fuses

14. Technical data, three-phase motors

WARNING
Electric shock
Death or serious personal injury
- Use the recommended fuse size.

Recommended size of fuse

For recommended size of fuses see the tables below.

3 × 380-500 V, Model J

Motor size [kW]	Recommended [A]	Maximum [A]
3	10	16
4	13	16
5.5	16	32
7.5	20	32
11	32	32

3 × 380-480 V, Model K

Motor size [kW]	Recommended [A]	Maximum [A]	Fuse type
11	35	63	gG
15	50	80	gG
18.5	60	80	gG
22	70	80	gG

3 × 200-240 V, Model J

Motor size [kW]	Recommended [A]	Maximum [A]
2.2	13	35
3	16	35
4	25	35
5.5	32	35

3 × 200-240 V, Model K

Motor size [kW]	Recommended [A]	Maximum [A]	Fuse type
7.5	60	80	gG
11	70	80	gG

Related information

6.3 Backup fuses

14.1 Leakage current

The leakage currents are measured without any load on the shaft and in accordance with EN 61800-5-1:2007.

WARNING
Electric shock
Death or serious personal injury

- If the leakage current is greater than 3.5 mA, use a PE cable with a minimum cross-section of at least 10 mm^2, or use 2 separate PE cables with the same cross section as the power cable.

3 × 380-500 V, 50/60 Hz, Model J

Speed [rpm]	Power [kW]	Mains voltage [V]	Leakage current (I_L) [mA]
1450-2200	2.2 - 4	≤ 400	< 3.5
		> 400	< 3.5
	5.5 - 7.5	≤ 400	< 3.5
		> 400	3.5 < I_L < 5.0
2900-4000	3 - 5.5	≤ 400	< 3.5
		> 400	< 3.5
	7.5 - 11	≤ 400	< 3.5
		> 400	3.5 < I_L < 5.0

3 × 380-480 V, 50/60 Hz, Model K

Speed [rpm]	Power [kW]	Mains voltage [V]	Leakage current (I_L) [mA]
1450-2200	11-22	≤ 400	3.5 < I_L < 20
		> 400	3.5 < I_L < 30
2900-4000	15-22	≤ 400	3.5 < I_L < 20
		> 400	3.5 < I_L < 30

3 × 200-240 V, 50/60 Hz, Model J

Speed [rpm]	Power [kW]	Mains voltage [V]	Leakage current (I_L) [mA]
3400-4000	2.2 - 5.5	200-240	< 3.5

Related information

6.4 Additional protection

14.2 Accessories

The following are the communication interface modules intended for use with the product:

Protocol	Communication interface module
GENIbus	CIM 050
LonWorks (Single)	CIM 100
PROFIBUS DP	CIM 150
Modbus RTU	CIM 200
BACnet MS/TP	CIM 300
Modbus TCP, BACnet IP, PROFINET, GiC/GRM IP, EtherNet IP	CIM 500
LonWorks (Multi)	CIM 110

Installing a communication interface module not listed above might affect the compliance level of the product.

15. Further product information

Use either the QR code or the web address below to access the complete installation and operating instructions for the relevant product.

CRE, CRIE, CRNE, SPKE, MTRE and CME pumps

TM056174

http://net.grundfos.com/qr/i/98358864

16. Disposing of the product

This product or parts of it must be disposed of in an environmentally sound way.

1. Use the public or private waste collection service.
2. If this is not possible, contact the nearest Grundfos company or service workshop.

The crossed-out wheelie bin symbol on a product means that it must be disposed of separately from household waste. When a product marked with this symbol reaches its end of life, take it to a collection point designated by the local waste disposal authorities. The separate collection and recycling of such products will help protect the environment and human health.

See also end-of-life information at *www.grundfos.com/product-recycling*.

17. Document quality feedback

To provide feedback about this document, scan the QR-code using your phone's camera or a QR code app.

Click here to submit your feedback

1. Security updates for Australia

Security updates for this product are provided from March 1, 2026 until March 1, 2028, in line with the requirements set out in the Australian Cyber Security Act 2024 and the Cyber Security Standards for Smart Devices Rules 2025.

For more information regarding the affected products, compliance and vulnerability reporting, see the dedicated Grundfos landing page.

https://www.grundfos.com/au/support/compliance/cyber-security-act

Argentina
Bombas GRUNDFOS de Argentina S.A.
Ruta Panamericana km. 37.500industin
1619 - Garín Pcia. de B.A.
Tel.: +54-3327 414 444
Fax: +54-3327 45 3190

Australia
GRUNDFOS Pumps Pty. Ltd.
P.O. Box 2040
Regency Park
South Australia 5942
Tel.: +61-8-8461-4611
Fax: +61-8-8340-0155

Austria
GRUNDFOS Pumpen Vertrieb
Ges.m.b.H.
Grundfosstraße 2
A-5082 Grödig/Salzburg
Tel.: +43-6246-883-0
Fax: +43-6246-883-30

Belgium
N.V. GRUNDFOS Bellux S.A.
Boomsesteenweg 81-83
B-2630 Aartselaar
Tel.: +32-3-870 7300
Fax: +32-3-870 7301

Bosnia and Herzegovina
GRUNDFOS Sarajevo
Zmaja od Bosne 7-7A
BiH-71000 Sarajevo
Tel.: +387 33 592 480
Fax: +387 33 590 465
www.ba.grundfos.com
E-mail: grundfos@bih.net.ba

Brazil
BOMBAS GRUNDFOS DO BRASIL
Av. Humberto de Alencar Castelo
Branco, 630
CEP 09850 - 300
São Bernardo do Campo - SP
Tel.: +55-11 4393 5533
Fax: +55-11 4343 5015

Bulgaria
Grundfos Bulgaria EOOD
Slatina District
Iztochna Tangenta street no. 100
BG - 1592 Sofia
Tel.: +359 2 49 22 200
Fax: +359 2 49 22 201
E-mail: bulgaria@grundfos.bg

Canada
GRUNDFOS Canada inc.
2941 Brighton Road
Oakville, Ontario
L6H 6C9
Tel.: +1-905 829 9533
Fax: +1-905 829 9512

China
GRUNDFOS Pumps (Shanghai) Co. Ltd.
10F The Hub, No. 33 Suhong Road
Minhang District
Shanghai 201106 PRC
Tel.: +86 21 612 252 22
Fax: +86 21 612 253 33

Colombia
GRUNDFOS Colombia S.A.S.
Km 1.5 vía Siberia-Cota Conj. Potrero
Chico,
Parque Empresarial Arcos de Cota Bod.
1A.
Cota, Cundinamarca
Tel.: +57(1)-2913444
Fax: +57(1)-8764586

Croatia
GRUNDFOS CROATIA d.o.o.
Buzinski prilaz 38, Buzin
HR-10010 Zagreb
Tel.: +385 1 6595 400
Fax: +385 1 6595 499
www.hr.grundfos.com

Czech Republic
GRUNDFOS Sales Czechia and Slovakia
s.r.o.
Čajkovského 21
779 00 Olomouc
Tel.: +420-585-716 111

Denmark
GRUNDFOS DK A/S
Martin Bachs Vej 3
DK-8850 Bjerringbro
Tel.: +45-87 50 50 50
Fax: +45-87 50 51 51
E-mail: info_GDK@grundfos.com
www.grundfos.com/DK

Estonia
GRUNDFOS Pumps Eesti OÜ
Peterburi tee 92G
11415 Tallinn
Tel.: + 372 606 1690
Fax: + 372 606 1691

Finland
OY GRUNDFOS Pumput AB
Trukkikuja 1
FI-01360 Vantaa
Tel.: +358-(0) 207 889 500

France
Pompes GRUNDFOS Distribution S.A.
Parc d'Activités de Chesnes
57, rue de Malacombe
F-38290 St. Quentin Fallavier (Lyon)
Tel.: +33-4 74 82 15 15
Fax: +33-4 74 94 10 51

Germany
GRUNDFOS GMBH
Schlüterstr. 33
40699 Erkrath
Tel.: +49-(0) 211 929 69-0
Fax: +49-(0) 211 929 69-3799
E-mail: infoservice@grundfos.de
Service in Deutschland:
kundendienst@grundfos.de

Greece
GRUNDFOS Hellas A.E.B.E.
20th km. Athinon-Markopoulou Av.
P.O. Box 71
GR-19002 Peania
Tel.: +0030-210-66 83 400
Fax: +0030-210-66 46 273

Hong Kong
GRUNDFOS Pumps (Hong Kong) Ltd.
Unit 1, Ground floor, Siu Wai industrial
Centre
29-33 Wing Hong Street & 68 King Lam
Street, Cheung Sha Wan
Kowloon
Tel.: +852-27861706 / 27861741
Fax: +852-27858664

Hungary
GRUNDFOS South East Europe Kft.
Tópark u. 8
H-2045 Törökbálint
Tel.: +36-23 511 110
Fax: +36-23 511 111

India
GRUNDFOS Pumps India Private
Limited
118 Old Mahabalipuram Road
Thoraipakkam
Chennai 600 097
Tel.: +91-44 2496 6800

Indonesia
PT GRUNDFOS Pompa
Graha intirub Lt. 2 & 3
Jln. Cililitan Besar No.454. Makasar,
Jakarta Timur
ID-Jakarta 13650
Tel.: +62 21-469-51900
Fax: +62 21-460 6910 / 460 6901

Ireland
GRUNDFOS (Ireland) Ltd.
Unit A, Merrywell Business Park
Ballymount Road Lower
Dublin 12
Tel.: +353-1-4089 800
Fax: +353-1-4089 830

Italy
GRUNDFOS Pompe Italia S.r.l.
Via Gran Sasso 4
I-20060 Truccazzano (Milano)
Tel.: +39-02-95838112
Fax: +39-02-95309290 / 95838461

Japan
GRUNDFOS Pumps K.K.
1-2-3, Shin-Miyakoda, Kita-ku
Hamamatsu
431-2103 Japan
Tel.: +81 53 428 4760
Fax: +81 53 428 5005

Kazakhstan
Grundfos Kazakhstan LLP
7' Kyz-Zhibek Str., Kok-Tobe micr.
KZ-050020 Almaty Kazakhstan
Tel.: +7 (727) 227-98-55/56

Korea
GRUNDFOS Pumps Korea Ltd.
6th Floor, Aju Building 679-5
Yeoksam-dong, Kangnam-ku, 135-916
Seoul, Korea
Tel.: +82-2-5317 600
Fax: +82-2-5633 725

Latvia
SIA GRUNDFOS Pumps Latvia
Deglava biznesa centrs
Augusta Deglava ielā 60
LV-1035, Rīga,
Tel.: + 371 714 9640, 7 149 641
Fax: + 371 914 9646

Lithuania
GRUNDFOS Pumps UAB
Smolensko g. 6
LT-03201 Vilnius
Tel.: + 370 52 395 430
Fax: + 370 52 395 431

Malaysia
GRUNDFOS Pumps Sdn. Bhd.
7 Jalan Peguam U1/25
Glenmarie industrial Park
40150 Shah Alam, Selangor
Tel.: +60-3-5569 2922
Fax: +60-3-5569 2866

Mexico
Bombas GRUNDFOS de México
S.A. de C.V.
Boulevard TLC No. 15
Parque industrial Stiva Aeropuerto
Apodaca, N.L. 66600
Tel.: +52-81-8144 4000
Fax: +52-81-8144 4010

Netherlands
GRUNDFOS Netherlands
Veluwezoom 35
1326 AE Almere
Postbus 22015
1302 CA ALMERE
Tel.: +31-88-478 6336
Fax: +31-88-478 6332
E-mail: info_gnl@grundfos.com

New Zealand
GRUNDFOS Pumps NZ Ltd.
17 Beatrice Tinsley Crescent
North Harbour Industrial Estate
Albany, Auckland
Tel.: +64-9-415 3240
Fax: +64-9-415 3250

Norway
GRUNDFOS Pumper A/S
Strømsveien 344
Postboks 235, Leirdal
N-1011 Oslo
Tel.: +47-22 90 47 00
Fax: +47-22 32 21 50

Poland
GRUNDFOS Pompy Sp. z o.o.
ul. Klonowa 23
Baranowo k. Poznania
PL-62-081 Przeźmierowo
Tel.: (+48-61) 650 13 00
Fax: (+48-61) 650 13 50

Portugal
Bombas GRUNDFOS Portugal, S.A.
Rua Calvet de Magalhães, 241
Apartado 1079
P-2770-153 Paço de Arcos
Tel.: +351-21-440 76 00
Fax: +351-21-440 76 90

Romania
GRUNDFOS Pompe România SRL
S-PARK BUSINESS CENTER, Clădirea A2, etaj 2
Str. Tipografilor, Nr. 11-15, Sector 1, Cod 013714
Bucuresti, Romania
Tel.: 004 021 2004 100
E-mail: romania@grundfos.ro

Serbia
Grundfos Srbija d.o.o.
Omladinskih brigada 90b
11070 Novi Beograd
Tel.: +381 11 2258 740
Fax: +381 11 2281 769
www.rs.grundfos.com

Singapore
GRUNDFOS (Singapore) Pte. Ltd.
25 Jalan Tukang
Singapore 619264
Tel.: +65-6681 9688
Faxax: +65-6681 9689

Slovakia
GRUNDFOS s.r.o.
Prievozská 4D 821 09 BRATISLAVA
Tel.: +421 2 5020 1426
sk.grundfos.com

Slovenia
GRUNDFOS LJUBLJANA, d.o.o.
Leskoškova 9e, 1122 Ljubljana
Tel.: +386 (0) 1 568 06 10
Fax: +386 (0)1 568 06 19
E-mail: tehnika-si@grundfos.com

South Africa
GRUNDFOS (PTY) LTD
16 Lascelles Drive, Meadowbrook Estate
1609 Germiston, Johannesburg
Tel.: (+27) 10 248 6000
Fax: (+27) 10 248 6002
E-mail: lgradidge@grundfos.com

Spain
Bombas GRUNDFOS España S.A.
Camino de la Fuentecilla, s/n
E-28110 Algete (Madrid)
Tel.: +34-91-848 8800
Fax: +34-91-628 0465

Sweden
GRUNDFOS AB
Box 333 (Lunnagårdsgatan 6)
431 24 Mölndal
Tel.: +46 31 332 23 000
Fax: +46 31 331 94 60

Switzerland
GRUNDFOS Pumpen AG
Bruggacherstrasse 10
CH-8117 Fällanden/ZH
Tel.: +41-44-806 8111
Fax: +41-44-806 8115

Taiwan
GRUNDFOS Pumps (Taiwan) Ltd.
7 Floor, 219 Min-Chuan Road
Taichung, Taiwan, R.O.C.
Tel.: +886-4-2305 0868
Fax: +886-4-2305 0878

Thailand
GRUNDFOS (Thailand) Ltd.
92 Chaloem Phrakiat Rama 9 Road
Dokmai, Pravej, Bangkok 10250
Tel.: +66-2-725 8999
Fax: +66-2-725 8998

Turkey
GRUNDFOS POMPA San. ve Tic. Ltd. Sti.
Gebze Organize Sanayi Bölgesi
Ihsan dede Caddesi
2. yol 200. Sokak No. 204
41490 Gebze/ Kocaeli
Tel.: +90 - 262-679 7979
Fax: +90 - 262-679 7905
E-mail: satis@grundfos.com

Ukraine
ТОВ "ГРУНДФОС УКРАЇНА"
Бізнес Центр Європа
Столичне шосе, 103
м. Київ, 03131, Україна
Tel.: (+38 044) 237 04 00
Fax: (+38 044) 237 04 01
E-mail: ukraine@grundfos.com

United Arab Emirates
GRUNDFOS Gulf Distribution
P.O. Box 16768
Jebel Ali Free Zone, Dubai
Tel.: +971 4 8815 166
Fax: +971 4 8815 136

United Kingdom
GRUNDFOS Pumps Ltd.
Grovebury Road
Leighton Buzzard/Beds. LU7 4TL
Tel.: +44-1525-850000
Fax: +44-1525-850011

U.S.A.
Global Headquarters for WU
856 Koomey Road
Brookshire, Texas 77423 USA
Phone: +1-630-236-5500

Uzbekistan
Grundfos Tashkent, Uzbekistan
The Representative Office of Grundfos Kazakhstan in Uzbekistan
38a, Oybek street, Tashkent
Tel.: (+998) 71 150 3290 / 71 150 3291
Fax: (+998) 71 150 3292

© Grundfos Holding A/S 03.2026

93277869

ECM: 1445738	03.2026

Grundfos Holding A/S
Poul Due Jensens Vej 7
DK-8850 Bjerringbro
Tel: +45 87 50 14 00
www.grundfos.com