Installation and operating instructions

PM PLUS

GRUNDFOS

PM PLUS

English (GB)

Installation and operating instructions 4

Original installation and operating instructions

Table of contents

1. General information 4
1.1 Hazard statements 4
1.2 Notes 5

2. Product description 5
2.1 Intended use 5
2.2 Pumped liquids 5
2.3 Dry-running protection 6
2.4 Operating panel 6

3. Receiving the product. 6
3.1 Inspecting the product 6

4. Installation requirements 6
4.1 Location 6

5. Mechanical installation 7
5.1 Position in the pipe system 7
5.2 Installation height 7

6. Electrical connection 8
6.1 Wiring diagrams. 9

7. Starting up the product 10
7.1 Setting the cut-in pressure 10

8. Taking the product out of operation 10
8.1 Frost protection 10

9. Fault finding 11
9.1 The pump does not start 11
9.2 The pump does not start when water is consumed 11
9.3 Frequent starts and stops 11
9.4 The pump does not stop 11
9.5 The red indicator flashes 11

10. Technical data 12
10.1 Dimensional drawing 12

11. Disposing of the product 13

12. Document quality feedback 13

1. General information

Appliances can be used by persons with reduced physical, sensory, or mental capabilities, as well as persons with a lack of experience and knowledge. This requires that they are given supervision or instruction concerning the use of the appliance in a safe way and that they understand the hazards involved. Cleaning and user maintenance shall not be carried out by children without supervision.

Read this document before you install the product. Installation and operation must comply with local regulations and accepted codes of good practice.

1.1 Hazard statements

The symbols and hazard statements below may appear in Grundfos installation and operating instructions, safety instructions and service instructions.

DANGER

Indicates a hazardous situation which, if not avoided, will result in death or serious personal injury.

WARNING

Indicates a hazardous situation which, if not avoided, could result in death or serious personal injury.

CAUTION

Indicates a hazardous situation which, if not avoided, could result in minor or moderate personal injury.

The hazard statements are structured in the following way:

SIGNAL WORD

Description of the hazard

Consequence of ignoring the warning

- Action to avoid the hazard.

1.2 Notes

The symbols and notes below may appear in Grundfos installation and operating instructions, safety instructions and service instructions.

Observe these instructions for explosion-proof products.

A blue or gray circle with a white graphical symbol indicates that an action must be taken.

A red or gray circle with a diagonal bar, possibly with a black graphical symbol, indicates that an action must not be taken or must be stopped.

If these instructions are not observed, it may result in malfunction or damage to the equipment.

Tips and advice that make the work easier.

2. Product description

Grundfos PM PLUS is a pressure manager designed for automatic start/stop control of Grundfos or other pumps for water supply in domestic applications. With adjustable start pressure, PM PLUS can easily be customised to your specific application. PM PLUS features automatic protection that stops the pump in case of water shortage, preventing dry running. In case of temporary power outage, PM PLUS automatically resets itself once power is restored.

2.1 Intended use

Typical applications are water supply systems and rainwater systems in:

- one-family houses
- blocks of flats
- summer houses and cottages
- horticulture and gardening
- agriculture.

2.2 Pumped liquids

The product is suitable for clean, thin, non-aggressive and non-explosive liquids without solid particles or fibres that may attack the product mechanically or chemically.

2.3 Dry-running protection

Dry-running protection automatically stops the pump in case of dry running to prevent damage to the pump.

The pressure manager's green indicator light flashes if the pump runs dry.

2.3.1 Automatic restart

The product features automatic restart when the pump stops due to water shortage. In case of a stop, the product automatically makes 10 double attempts over 24 hours to restart. Each attempt lasts 5 seconds.

The product can be manually restarted by pressing the **Reset** button.

2.3.2 Anti-blocking feature

If the pump is idle for 24 consecutive hours, the product automatically attempts to restart the pump.

2.4 Operating panel

The product offers a user-friendly interface with a **Reset** button and indicator lights.

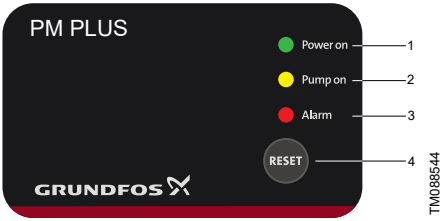

Pos.	Description	Function
1	**Power on**	The green indicator light is permanently on when the power is on.
2	**Pump on**	The yellow indicator light is on when the pump is in operation.
3	**Alarm**	The red indicator light flashes in case of dry running.
4	**Reset**	The button is used for resetting fault indications.

3. Receiving the product

3.1 Inspecting the product

On receipt of the product, do the following:

1. Check that the product is as ordered.
   If the product is not as ordered, contact the supplier.
2. Make sure that the supply voltage and frequency correspond to the values stated on the nameplate of the product.

4. Installation requirements

4.1 Location

Install the product so that inspection, maintenance and service can easily be performed.

Install the product in a well-ventilated location to ensure cooling of its components.

The product can be installed indoors or outdoors, but it must be protected from exposure to direct sunlight, rain and snow.

5. Mechanical installation

5.1 Position in the pipe system

Install the pressure manager on the outlet side of the pump.

The pressure manager can be fitted directly to the system manifold outlet port or between the manifold and the first tapping point.

Example

The pressure manager can be installed in systems with or without a pressure tank.

Observe these general recommendations when you install the pressure manager:

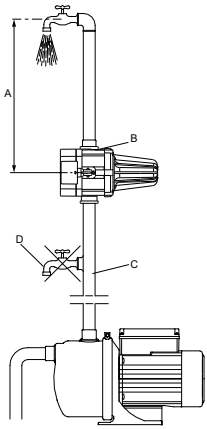

TM088887

Pos.	Installation instructions
A	Observe the recommended maximum installation height between the pressure manager and the highest tapping point.
B	Install the pressure manager, so that the operating panel is visible and easy to access.
C	Do not install draw-off points between the pump and the pressure manager.
D	Do not install taps between the pump and the pressure manager.

Non-return valve

If you pump from a well, borehole or similar, always fit a non-return valve on the inlet side.

5.2 Installation height

The pressure manager can be fitted directly to the outlet port of the pump or between the pump and the first draw-off point.

The arrows on the pressure manager indicate the flow direction.

Always install the pressure manager with the arrows pointing upwards.

Cut-in pressure	1.5 bar (22 psi)	2 bar (29 psi)	2.5 bar (36 psi)	3 bar (44 psi)
Number of floors	5	6	8	10
Building height	15 m (49 ft)	25 m (82 ft)	30 m (98.4 ft)	35 m (114.8 ft)
Min. pump pressure	3 bar (44 psi)	3.5 bar (51 psi)	4 bar (58 psi)	4.5 bar (65 psi)

6. Electrical connection

WARNING
Electric shock
Death or serious personal injury

- Switch off the power supply before you start any work on the product. Make sure that the power supply cannot be switched on accidentally.

WARNING
Electric shock
Death or serious personal injury

- Connect the product to protective earth and provide protection against indirect contact in accordance with local regulations.
- Power cables without a plug must be connected to a supply disconnecting device incorporated in the fixed wiring according to the local wiring rules.
- The installation must be fitted with a residual-current device (RCD) with a tripping current less than 30 mA.
- The pressure manager must be connected to an external mains switch with a contact gap of at least 3 mm in all poles.

All electrical connections must be carried out by qualified persons in accordance with local regulations.

The product can be powered by a generator or other alternative power supplies, provided that the requirements for the power supply are fulfilled.

Connect products delivered with a power plug using the supplied cable and plug.
Connect products with no fitted cable and plug according to the following instructions:

1. Remove the operating panel from the front of the product.

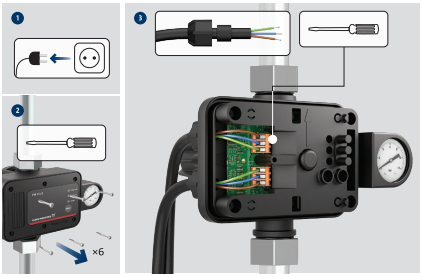

TM088825

2. Make the electrical connection according to the wiring diagram.
3. Fit the operating panel securely with all four mounting screws to maintain enclosure class IP65.

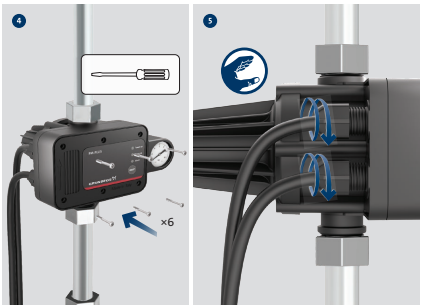

TM088826

6.1 Wiring diagrams

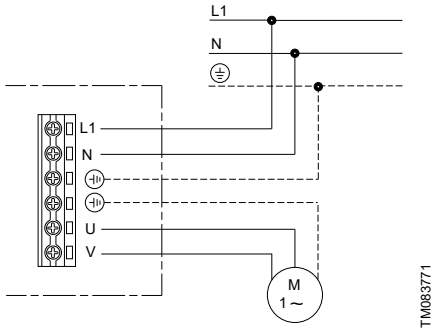

Wiring diagram for one-phase pumps

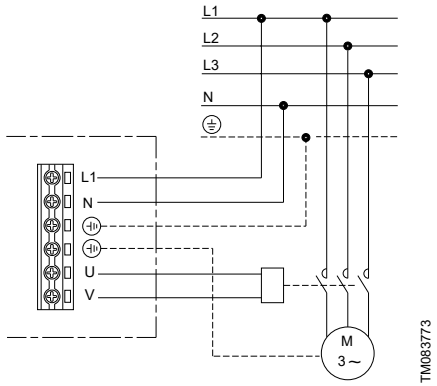

Wiring diagram for three-phase pumps

7. Starting up the product

7.1 Setting the cut-in pressure

Follow the instructions below to set the cut-in pressure values.

1. Set the desired cut-in pressure by turning the screw on the back of the product. Turn clockwise to increase the cut-in pressure value and counterclockwise to decrease the cut-in pressure value.

TM087980

2. See the correct settings of the cut-in pressure in the table below.

Cut-in pressure	1.5 bar (22 psi)	2 bar (29 psi)	2.5 bar (36 psi)	3 bar (44 psi)

8. Taking the product out of operation

8.1 Frost protection

If the pressure manager is subjected to frost in periods of inactivity, the pressure manager and the pipes must be drained before the pressure manager is taken out of operation.

1. Shut off the water supply to the system.
2. Drain the isolated system at the lowest located point in the system. Make sure that pumps and pressure manager are drained separately.

9. Fault finding

DANGER
Electric shock
Death or serious personal injury

- Before starting work on the pump or the pressure manager, make sure that the power supply has been switched off, and that it cannot be switched on accidentally.

9.1 The pump does not start

Cause	Remedy
The fuses in the electric installation are blown.	• Replace the fuses. If the new fuses also blow, check the electrical installation.
The earth leakage circuit breaker or voltage-operated circuit breaker has tripped.	• Cut in the circuit breaker.
No power supply.	• Contact the power supplier.
The motor protection has cut off the power supply due to overload.	• Check whether the motor or pump is blocked.
The pump is defective.	• Repair or replace the pump.
The device is off.	• Replace the control box.

9.2 The pump does not start when water is consumed

The indicator light is on.

Cause	Remedy
The system pressure is too high.	• Open a tap to reduce the pressure.
Too big distance of height between the product and the draw-off point.	• Adapt the installation.

9.3 Frequent starts and stops

Cause	Remedy
Leakage in the pipes lower than 1 l/min.	• Check and repair the pipes.

9.4 The pump does not stop

Cause	Remedy
A tap is open.	• Close the tap.
Leakage in the pipes higher than 1 liter/min.	• Check and repair the pipes.
The product is installed in horizontal position.	• Install the product in vertical position.

9.5 The red indicator light flashes

Cause	Remedy
Insufficient flow.	• Check the pipes.
The pump starts to self prime.	• Start the pump again.
The pump is unable to deliver the required outlet pressure.	• Adjust the installation. • Replace the pump.
The pump or pressure manager is defective.	• Replace the pump or pressure manager.

10. Technical data

Supply voltage	115/230 VAC, ± 10 %, 50/60 Hz
Ambient temperature	0-50 °C (122 °F)
Liquid temperature	0-60 °C (140 °F)
Max. current	10 A
Max. power at 115 VAC	0.75 kW (1 hp)
Max. power at 230 VAC	1.5 kW (2 hp)
Enclosure class	IP 65
Max. operating pressure	12 bar (174 psi)
Min. flow rate	≈ 1 l/min (0.26 gpm)
Pumped liquids	Clean water
Connection type	G1/NPT

10.1 Dimensional drawing

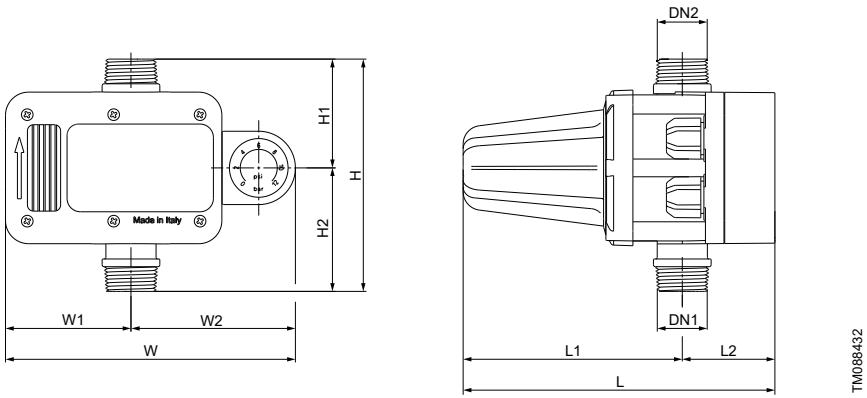

Product	Dimensions									DN1, DN2 [inch]
	L mm [inch]	L1 mm [inch]	L2 mm [inch]	W mm [inch]	W1 mm [inch]	W2 mm [inch]	H mm [inch]	H1 mm [inch]	H2 mm [inch]	
PM PLUS	200 [7.9]	140 [5.5]	60 [2.4]	188 [7.4]	81 [3.2]	107 [4.2]	150 [5.9]	70 [2.8]	80 [3.1]	G1

11. Disposing of the product

This product or parts of it must be disposed of in an environmentally sound way.

1. Use the public or private waste collection service.
2. If this is not possible, contact the nearest Grundfos company or service workshop.

	The crossed-out wheelie bin symbol on a product means that it must be disposed of separately from household waste. When a product marked with this symbol reaches its end of life, take it to a collection point designated by the local waste disposal authorities. The separate collection and recycling of such products will help protect the environment and human health.

See also end-of-life information at *www.grundfos.com/product-recycling*.

12. Document quality feedback

To provide feedback about this document, scan the QR-code using your phone's camera or a QR code app.

Click here to submit your feedback

Argentina
Bombas GRUNDFOS de Argentina S.A.
Ruta Panamericana km. 37.500industin
1619 - Garín Pcia. de B.A.
Tel.: +54-3327 414 444
Fax: +54-3327 45 3190

Australia
GRUNDFOS Pumps Pty. Ltd.
P.O. Box 2040
Regency Park
South Australia 5942
Tel.: +61-8-8461-4611
Fax: +61-8-8340-0155

Austria
GRUNDFOS Pumpen Vertrieb
Ges.m.b.H.
Grundfosstraße 2
A-5082 Grödig/Salzburg
Tel.: +43-6246-883-0
Fax: +43-6246-883-30

Belgium
N.V. GRUNDFOS Bellux S.A.
Boomsesteenweg 81-83
B-2630 Aartselaar
Tel.: +32-3-870 7300
Fax: +32-3-870 7301

Bosnia and Herzegovina
GRUNDFOS Sarajevo
Zmaja od Bosne 7-7A
BiH-71000 Sarajevo
Tel.: +387 33 592 480
Fax: +387 33 590 465
www.ba.grundfos.com
E-mail: grundfos@bih.net.ba

Brazil
BOMBAS GRUNDFOS DO BRASIL
Av. Humberto de Alencar Castelo
Branco, 630
CEP 09850 - 300
São Bernardo do Campo - SP
Tel.: +55-11 4393 5533
Fax: +55-11 4343 5015

Bulgaria
Grundfos Bulgaria EOOD
Slatina District
Iztochna Tangenta street no. 100
BG - 1592 Sofia
Tel.: +359 2 49 22 200
Fax: +359 2 49 22 201
E-mail: bulgaria@grundfos.bg

Canada
GRUNDFOS Canada inc.
2941 Brighton Road
Oakville, Ontario
L6H 6C9
Tel.: +1-905 829 9533
Fax: +1-905 829 9512

China
GRUNDFOS Pumps (Shanghai) Co. Ltd.
10F The Hub, No. 33 Suhong Road
Minhang District
Shanghai 201106 PRC
Tel.: +86 21 612 252 22
Fax: +86 21 612 253 33

Colombia
GRUNDFOS Colombia S.A.S.
Km 1.5 vía Siberia-Cota Conj. Potrero
Chico,
Parque Empresarial Arcos de Cota Bod.
1A.
Cota, Cundinamarca
Tel.: +57(1)-2913444
Fax: +57(1)-8764586

Croatia
GRUNDFOS CROATIA d.o.o.
Buzinski prilaz 38, Buzin
HR-10010 Zagreb
Tel.: +385 1 6595 400
Fax: +385 1 6595 499
www.hr.grundfos.com

Czech Republic
GRUNDFOS Sales Czechia and Slovakia
s.r.o.
Čajkovského 21
779 00 Olomouc
Tel.: +420-585-716 111

Denmark
GRUNDFOS DK A/S
Martin Bachs Vej 3
DK-8850 Bjerringbro
Tel.: +45-87 50 50 50
www.grundfos.com/DK

Estonia
SIA Grundfos Pumps Baltic Eesti filiaal
Priisle tee 10
13914 Tallinn
Tel.: + 372 606 1690
E-mail: estonia@sales.grundfos.com

Finland
OY GRUNDFOS Pumput AB
Trukkikuja 1
FI-01360 Vantaa
Tel.: +358-(0) 207 889 500

France
Pompes GRUNDFOS Distribution S.A.
Parc d'Activités de Chesnes
57, rue de Malacombe
F-38290 St. Quentin Fallavier (Lyon)
Tel.: +33-4 74 82 15 15
Fax: +33-4 74 94 10 51

Germany
GRUNDFOS GMBH
Schlüterstr. 33
40699 Erkrath
Tel.: +49-(0) 211 929 69-0
Fax: +49-(0) 211 929 69-3799
E-mail: infoservice@grundfos.de
Service in Deutschland:
kundendienst@grundfos.de

Greece
GRUNDFOS Hellas A.E.B.E.
20th km. Athinon-Markopoulou Av.
P.O. Box 71
GR-19002 Peania
Tel.: +0030-210-66 83 400
Fax: +0030-210-66 46 273

Hong Kong
GRUNDFOS Pumps (Hong Kong) Ltd.
Unit 1, Ground floor, Siu Wai industrial
Centre
29-33 Wing Hong Street & 68 King Lam
Street, Cheung Sha Wan
Kowloon
Tel.: +852-27861706 / 27861741
Fax: +852-27858664

Hungary
GRUNDFOS South East Europe Kft.
Tópark u. 8
H-2045 Törökbálint
Tel.: +36-23 511 110
Fax: +36-23 511 111

India
GRUNDFOS Pumps India Private
Limited
118 Old Mahabalipuram Road
Thoraipakkam
Chennai 600 097
Tel.: +91-44 2496 6800

Indonesia
PT GRUNDFOS Pompa
Graha intirub Lt. 2 & 3
Jln. Cililitan Besar No.454. Makasar,
Jakarta Timur
ID-Jakarta 13650
Tel.: +62 21-469-51900
Fax: +62 21-460 6910 / 460 6901

Ireland
GRUNDFOS (Ireland) Ltd.
Unit A, Merrywell Business Park
Ballymount Road Lower
Dublin 12
Tel.: +353-1-4089 800
Fax: +353-1-4089 830

Italy
GRUNDFOS Pompe Italia S.r.l.
Via Gran Sasso 4
I-20060 Truccazzano (Milano)
Tel.: +39-02-95838112
Fax: +39-02-95309290 / 95838461

Japan
GRUNDFOS Pumps K.K.
1-2-3, Shin-Miyakoda, Kita-ku
Hamamatsu
431-2103 Japan
Tel.: +81 53 428 4760
Fax: +81 53 428 5005

Kazakhstan
Grundfos Kazakhstan LLP
7' Kyz-Zhibek Str., Kok-Tobe micr.
KZ-050020 Almaty Kazakhstan
Tel.: +7 (727) 227-98-55/56

Korea
GRUNDFOS Pumps Korea Ltd.
6th Floor, Aju Building 679-5
Yeoksam-dong, Kangnam-ku, 135-916
Seoul, Korea
Tel.: +82-2-5317 600
Fax: +82-2-5633 725

Latvia
GRUNDFOS Pumps Baltic SIA
Gunāra Astras iela 8B
LV-1082, Rīga,
Tel.: + 371 671 49640
E-mail: latvia@sales.grundfos.com

Lithuania
SIA „GRUNDFOS PUMPS
BALTIC“ Lietuvos filialas
Smolensko g. 6
LT-03201 Vilnius
Tel.: + 370 5 239 5430
E-mail: lithuania@sales.grundfos.com

Malaysia
GRUNDFOS Pumps Sdn. Bhd.
7 Jalan Peguam U1/25
Glenmarie industrial Park
40150 Shah Alam, Selangor
Tel.: +60-3-5569 2922
Fax: +60-3-5569 2866

Mexico
Bombas GRUNDFOS de México
S.A. de C.V.
Boulevard TLC No. 15
Parque industrial Stiva Aeropuerto
Apodaca, N.L. 66600
Tel.: +52-81-8144 4000
Fax: +52-81-8144 4010

Netherlands
GRUNDFOS Netherlands
Veluwezoom 35
1326 AE Almere
Postbus 22015
1302 CA ALMERE
Tel.: +31-88-478 6336
Fax: +31-88-478 6332
E-mail: info_gnl@grundfos.com

New Zealand
GRUNDFOS Pumps NZ Ltd.
17 Beatrice Tinsley Crescent
North Harbour Industrial Estate
Albany, Auckland
Tel.: +64-9-415 3240
Fax: +64-9-415 3250

Norway
GRUNDFOS Pumper A/S
Strømsveien 344
Postboks 235, Leirdal
N-1011 Oslo
Tel.: +47-22 90 47 00
Fax: +47-22 32 21 50

Poland
GRUNDFOS Pompy Sp. z o.o.
ul. Klonowa 23
Baranowo k. Poznania
PL-62-081 Przeźmierowo
Tel.: (+48-61) 650 13 00
Fax: (+48-61) 650 13 50

Portugal
Bombas GRUNDFOS Portugal, S.A.
Rua Calvet de Magalhães, 241
Apartado 1079
P-2770-153 Paço de Arcos
Tel.: +351-21-440 76 00
Fax: +351-21-440 76 90

Romania
GRUNDFOS Pompe România SRL
S-PARK BUSINESS CENTER, Clădirea A2, etaj 2
Str. Tipografilor, Nr. 11-15, Sector 1, Cod 013714
Bucuresti, Romania
Tel.: 004 021 2004 100
E-mail: romania@grundfos.ro

Serbia
Grundfos Srbija d.o.o.
Omladinskih brigada 90b
11070 Novi Beograd
Tel.: +381 11 2258 740
Fax: +381 11 2281 769
www.rs.grundfos.com

Singapore
GRUNDFOS (Singapore) Pte. Ltd.
25 Jalan Tukang
Singapore 619264
Tel.: +65-6681 9688
Faxax: +65-6681 9689

Slovakia
GRUNDFOS s.r.o.
Prievozská 4D 821 09 BRATISLAVA
Tel.: +421 2 5020 1426
sk.grundfos.com

Slovenia
GRUNDFOS LJUBLJANA, d.o.o.
Leskoškova 9e, 1122 Ljubljana
Tel.: +386 (0) 1 568 06 10
Fax: +386 (0)1 568 06 19
E-mail: tehnika-si@grundfos.com

South Africa
GRUNDFOS (PTY) LTD
16 Lascelles Drive, Meadowbrook Estate
1609 Germiston, Johannesburg
Tel.: (+27) 10 248 6000
Fax: (+27) 10 248 6002
E-mail: lgradidge@grundfos.com

Spain
Bombas GRUNDFOS España S.A.
Camino de la Fuentecilla, s/n
E-28110 Algete (Madrid)
Tel.: +34-91-848 8800
Fax: +34-91-628 0465

Sweden
GRUNDFOS AB
Box 333 (Lunnagårdsgatan 6)
431 24 Mölndal
Tel.: +46 31 332 23 000
Fax: +46 31 331 94 60

Switzerland
GRUNDFOS Pumpen AG
Bruggacherstrasse 10
CH-8117 Fällanden/ZH
Tel.: +41-44-806 8111
Fax: +41-44-806 8115

Taiwan
GRUNDFOS Pumps (Taiwan) Ltd.
7 Floor, 219 Min-Chuan Road
Taichung, Taiwan, R.O.C.
Tel.: +886-4-2305 0868
Fax: +886-4-2305 0878

Thailand
GRUNDFOS (Thailand) Ltd.
92 Chaloem Phrakiat Rama 9 Road
Dokmai, Pravej, Bangkok 10250
Tel.: +66-2-725 8999
Fax: +66-2-725 8998

Turkey
GRUNDFOS POMPA San. ve Tic. Ltd. Sti.
Gebze Organize Sanayi Bölgesi
Ihsan dede Caddesi
2. yol 200. Sokak No. 204
41490 Gebze/ Kocaeli
Tel.: +90 - 262-679 7979
Fax: +90 - 262-679 7905
E-mail: satis@grundfos.com

Ukraine
ТОВ "ГРУНДФОС УКРАЇНА"
Бізнес Центр Європа
Столичне шосе, 103
м. Київ, 03131, Україна
Tel.: (+38 044) 237 04 00
Fax: (+38 044) 237 04 01
E-mail: ukraine@grundfos.com

United Arab Emirates
GRUNDFOS Gulf Distribution
P.O. Box 16768
Jebel Ali Free Zone, Dubai
Tel.: +971 4 8815 166
Fax: +971 4 8815 136

United Kingdom
GRUNDFOS Pumps Ltd.
Grovebury Road
Leighton Buzzard/Beds. LU7 4TL
Tel.: +44-1525-850000
Fax: +44-1525-850011

U.S.A.
Global Headquarters for WU
856 Koomey Road
Brookshire, Texas 77423 USA
Phone: +1-630-236-5500

Uzbekistan
Grundfos Tashkent, Uzbekistan
The Representative Office of Grundfos Kazakhstan in Uzbekistan
38a, Oybek street, Tashkent
Tel.: (+998) 71 150 3290 / 71 150 3291
Fax: (+998) 71 150 3292

© Grundfos Holding A/S 01.2026

93286837

ECM: 1443924	02.2026

Grundfos Holding A/S
Poul Due Jensens Vej 7
DK-8850 Bjerringbro
Tel: +45 87 50 14 00
www.grundfos.com