SMART Digital S

DDA-C

Service instructions

GRUNDFOS

SMART Digital S

English (GB)

Service instructions 4
Safety declaration 26

Original service instructions

Table of contents

1. General information 4

2. Hazard statements 4

3. Notes 4

4. Target group 4

5. General information 5

6. Service 5

6.1 Maintenance schedule 5
6.2 Service system 5
6.3 Perform service 6
6.4 Service overview 6
6.5 Dosing head overview 8
6.6 Disassembling the dosing head, diaphragm and valves . . . 8
6.7 Reassembling the dosing head, diaphragm and valves . . . 8
6.8 De-aerating the pump 9
6.9 Calibrating the pump 9
6.10 Replacing the pressure sensor 9
6.11 Pressure monitoring 10
6.12 Pressure setting ranges 10
6.13 Calibrating the pressure sensor 10
6.14 Replacing the cube front with PCB 11
6.15 Replacing the battery in the cube front 12
6.16 Replacing the power cable 12
6.17 Diaphragm leakage 13

7. Repairs 14

8. Additional information 14

8.1 Nameplate 14
8.2 Type key 14
8.3 Product overview 16
8.4 Technical data 17
8.5 Hydraulic connection 18
8.6 Connecting the hose 19
8.7 Electrical connection 19
8.8 Signal connections 19

9. Fault finding 21

9.1 General faults 21
9.2 Faults with error messages 22

10. Disposing of the product 25

11. Document quality feedback 25

1. General information

Read this document before you start service work on the product. Service work must comply with local regulations and accepted codes of good practice.

Observe the safety instructions for the product.

2. Hazard statements

The symbols and hazard statements below may appear in Grundfos installation and operating instructions, safety instructions and service instructions.

DANGER

Indicates a hazardous situation which, if not avoided, will result in death or serious personal injury.

WARNING

Indicates a hazardous situation which, if not avoided, could result in death or serious personal injury.

CAUTION

Indicates a hazardous situation which, if not avoided, could result in minor or moderate personal injury.

The hazard statements are structured in the following way:

SIGNAL WORD

Description of the hazard

Consequence of ignoring the warning

- Action to avoid the hazard.

3. Notes

The symbols and notes below may appear in Grundfos installation and operating instructions, safety instructions and service instructions.

Observe these instructions for explosion-proof products.

A blue or grey circle with a white graphical symbol indicates that an action must be taken.

A red or grey circle with a diagonal bar, possibly with a black graphical symbol, indicates that an action must not be taken or must be stopped.

If these instructions are not observed, it may result in malfunction or damage to the equipment.

Tips and advice that make the work easier.

4. Target group

These service instructions are intended for professional installers, operators and service technicians of the product.

We recommend that service and maintenance be carried out by skilled persons with technical qualifications required by the specific legislation in force.

5. General information

Service must be carried out by trained service specialists. Before carrying out maintenance and service, make sure that the product has been thoroughly flushed with clean water. Rinse the parts with water after dismantling.

Position numbers of parts (digits) refer to drawings and parts list.

Wear personal protective equipment if there is a risk of getting into contact with the pumped liquid. Observe local regulations.

6. Service

WARNING
Chemical hazard
Death or serious personal injury

- Maintenance work must only be carried out by qualified persons.
- The pump housing must only be opened by persons authorised by Grundfos.
- Do not connect the pump to the power supply.
- If the pump must remain connected to the power supply for maintenance, deactivate Bluetooth.
- The maintenance schedule must be observed. If the daily checks are not carried out, diaphragm leakage might not be recognized, which may lead to a chemical hazard.

To ensure a long service life and high dosing accuracy, wearing parts, such as diaphragms and valves, must be regularly checked for signs of wear. Replace worn parts with original spare parts made of suitable materials.

For service kits and spare parts, see the Service Kit Catalogue on the Grundfos Product Center.

Contact your Grundfos service partner if you have any questions.

Related information

9.2.18 Service now warning

6.1 Maintenance schedule

Daily

- Check if liquid is leaking from the drain opening and if the drain opening is blocked or soiled.
  - See section Dosing head overview.
  - Follow the instructions in section Diaphragm leakage.
- Check if liquid is leaking from the dosing head or valves.
  - Tighten the dosing head screws with a torque wrench at 4 Nm.
  - Tighten the valves and cap nuts, or perform service.
- Check if a service request message is shown on the pump display.
  - Follow the instructions in section Service system.

Weekly

- Clean all pump surfaces with a dry and clean cloth.

Every 3 months

- Check the dosing head screws.
  - Tighten the dosing head screws with a torque wrench at 4 Nm.
  - Replace damaged screws immediately.

Check the condition of your foot valve regularly and with every dosing tank exchange.

Related information

6.2 Service system
6.5 Dosing head overview
6.17 Diaphragm leakage

6.2 Service system

After a defined motor runtime or period of operation, service request messages are shown. Service request messages are shown regardless of the current operating state of the pump and do not affect the dosing process.

A service request message signals when the replacement of wearing parts is due. Press the click wheel to temporarily hide the message.

When the **Service now** message appears, the pump must be serviced immediately.

Service	Motor runtime [1] [h]	Time interval [1] [months]
Soon	7500	23
Now	8000	24

[1] Since the last service system reset

In the **Info** > **Service** menu, the **Service due date** and the **Motor runtime left** are displayed.

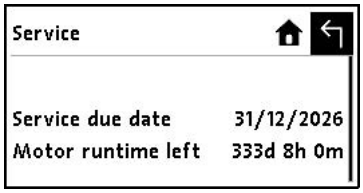

In the **Info** > **Service kit** menu, the following service kits are displayed with their product numbers:

- **Valves + diaphragm**
- **Valves**
- **Diaphragm**
- **Complete Dosing head**

More service kits and spare parts can be found on www.grundfos.com.

For media that cause increased wear, the service interval must be shortened.

After performing service, the service system must be reset using the **Info** > **Service reset** function.

Related information

6.1 Maintenance schedule
9.2 Faults with error messages

6.3 Perform service

WARNING
Chemical hazard
Death or serious personal injury

- Observe the safety data sheets and safety instructions of the chemical manufacturer when handling chemicals.
- Wear personal protective equipment when working on the dosing head, connections or lines.
- Before starting work on the pump, the pump must be in operating state 'Stop' or be disconnected from the power supply.
- The system must be depressurised.
- Collect and dispose of all chemicals in a way that is not harmful to humans, animals or the environment.

Only spare parts and accessories from Grundfos should be used for maintenance. The usage of non-original spare parts and accessories renders any liability for resulting damages null and void.

For more information, visit www.grundfos.com.

6.4 Service overview

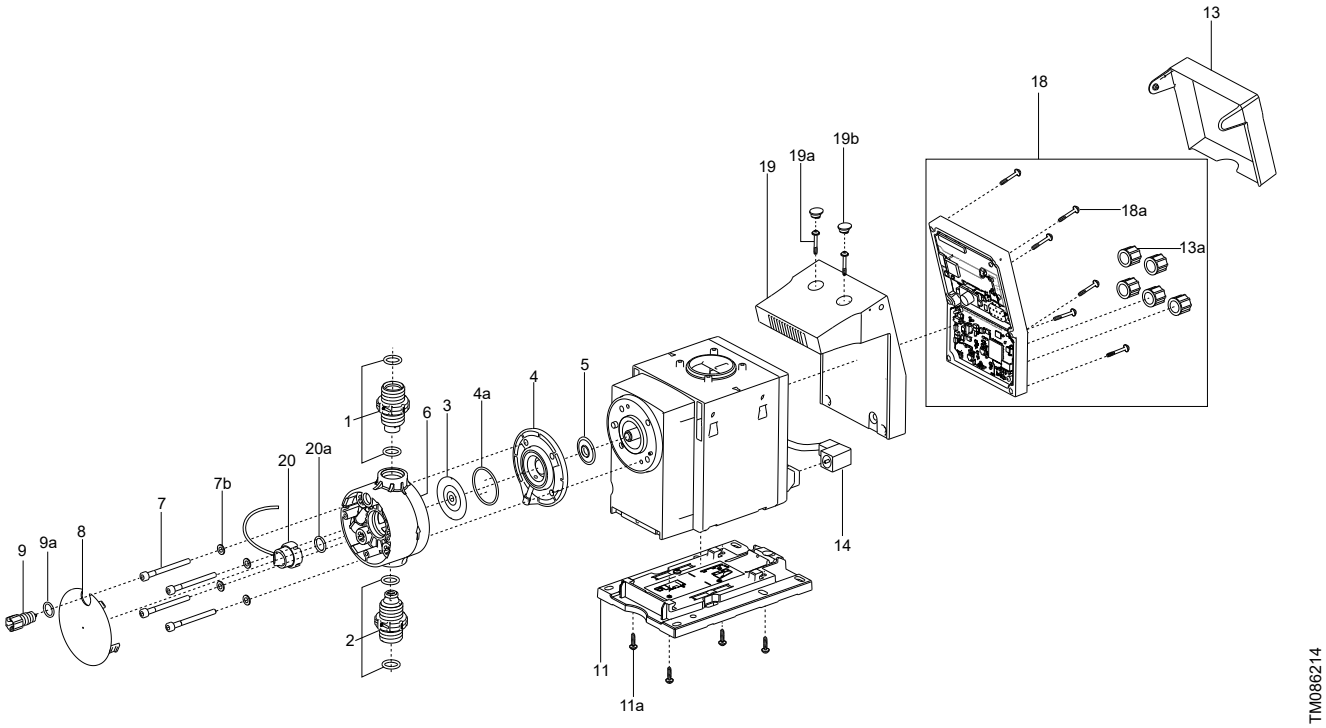

Exploded view DDA-C, up to 17 l/h

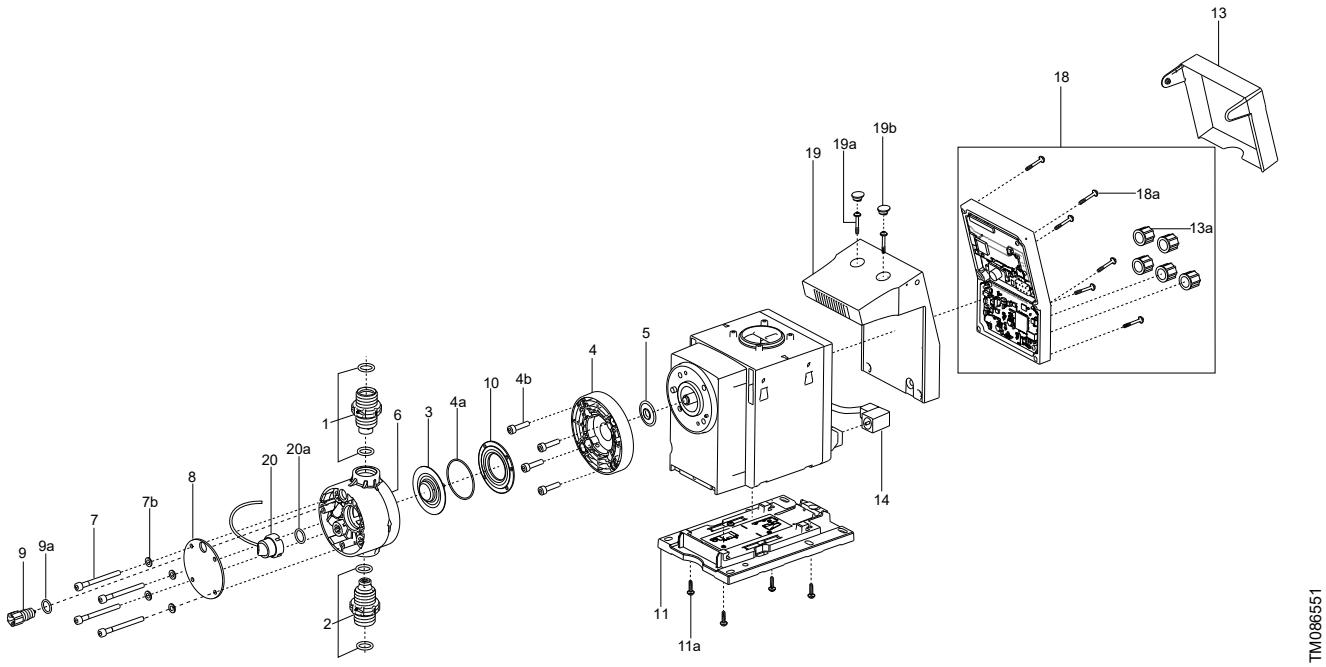

Exploded view DDA-C, 30 l/h

Pos.	Component
1	Discharge valve with O-rings
2	Suction valve with O-rings
3	Dosing diaphragm
4	Dosing head flange
4a	O-ring
4b	Screws
5	Safety diaphragm
6	Dosing head
7	Dosing head screws
7b	Washers
8	Cover
9	Deaeration screw
9a	O-ring
10	Intermediate ring
11	Base plate
11a	Screws
13	Transparent cover
13a	Plugs for M12 input and output connectors
14	Power cable
18	Cube front with PCB
18a	Screws for cube front
19	Cube
19a	Screws for control cube
19b	Protective caps
20	FCM pressure sensor
20a	O-ring

6.5 Dosing head overview

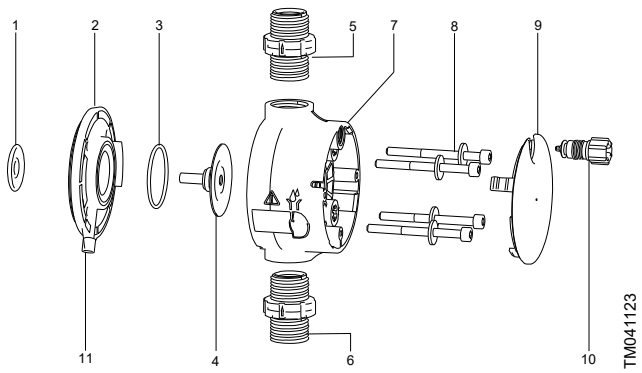

Pos.	Component
1	Safety diaphragm
2	Flange
3	O-ring
4	Diaphragm
5	Valve on discharge side
6	Valve on suction side
7	Dosing head
8	Screws with washers
9	Cover
10	De-aeration valve
11	Drain opening

Related information

6.1 Maintenance schedule

6.6 Disassembling the dosing head, diaphragm and valves

WARNING
Chemical hazard
Death or serious personal injury
- Do not connect the pump to the power supply, if the diaphragm is possibly damaged. If the diaphragm is possibly damaged, proceed as described in section Diaphragm leakage.

Observe section Perform service.

The numbers in brackets refer to the figure in section Dosing head overview.

1. Put on the stipulated personal protective equipment.
2. Press the Start/Stop key to set the pump to operating state 'Stop'.
3. Depressurise the system.
4. Flush the dosing head, if necessary.
5. Press the Start/Stop key and the 100% key simultaneously to move the diaphragm to its 'out' position.
   (- is shown on the display.
6. Disassemble the suction, discharge and de-aeration lines.
   Make sure that the returning liquid is safely collected.
7. Disassemble the valves on the suction and discharge side (5, 6).
8. Disconnect the **FlowControl** signal connection, if present.
   See section Signal connections.
9. Remove the cover (9).
10. Loosen the screws (8) on the dosing head (7) and remove them together with the washers.
11. Remove the dosing head (7).
12. Grasp the diaphragm (4) with your hands, turn it counter-clockwise and remove it together with the flange (2).
    Do not use tools.
13. Make sure that the drain opening (11) is not blocked or soiled. Clean the drain opening, if necessary.
14. Check the safety diaphragm (1) for wear and damage. Replace the safety diaphragm, if necessary.

If nothing indicates that dosing liquid has entered the pump housing, go on as described in section Reassembling the dosing head, diaphragm and valves.

If dosing liquid has entered the pump housing, proceed as described in section Dosing liquid in the pump housing.

Related information

6.3 Perform service
6.5 Dosing head overview
6.7 Reassembling the dosing head, diaphragm and valves
6.17 Diaphragm leakage
6.17.2 Dosing liquid in the pump housing
8.8 Signal connections

6.7 Reassembling the dosing head, diaphragm and valves

Tighten the dosing head screws with a torque wrench before startup and every time the dosing head is opened.
After 2-5 operating hours, retighten the dosing head screws using a torque wrench.
Torque [Nm]: 4

Only start reassembling if nothing indicates that dosing liquid has entered the pump housing. Otherwise proceed as described in section Dosing liquid in the pump housing.

The numbers in brackets refer to the figure in section Dosing head overview.

1. Put on the stipulated personal protective equipment.
2. Attach the flange (2) correctly.
   Observe the drain opening (11).
3. Place a new O-ring (3) in the flange (2).
   Make sure the O-ring is seated correctly.
4. Assemble the new diaphragm (4) by turning it clockwise with your hands until it is firmly seated.
   Do not use tools.
5. Press the Start/Stop key and the 100% key simultaneously to move the diaphragm to its 'in' position.
)- is shown on the display.
6. Attach the dosing head (7).
7. Screw in the screws with washers (8) manually and cross-tighten them with a torque wrench.
   Torque [Nm]: 4
8. Connect the **FlowControl** signal connection, if present.
   See section Signal connections.
9. Attach the cover (9).
10. Install new valves (5, 6).
    - Do not interchange the valves.
    - Observe the direction of the arrow on the valves.
    - Make sure that the O-rings are seated correctly.
11. Connect the suction, discharge and de-aeration lines.
    See section Hydraulic connection.
12. Press the Start/Stop key to leave the service mode.

13. De-aerate the dosing pump.
    See section De-aerating the pump.
14. If you installed a new dosing head with pressure sensor, perform sensor calibration.
    See section Calibrating the pressure sensor.

Related information

6.3 Perform service
6.5 Dosing head overview
6.8 De-aerating the pump
6.13 Calibrating the pressure sensor
6.17.2 Dosing liquid in the pump housing
8.5 Hydraulic connection
8.8 Signal connections

6.8 De-aerating the pump

WARNING
Chemical hazard
Death or serious personal injury
- The de-aeration hose must be connected correctly and inserted into a suitable tank.
- Do not open the de-aeration valve by more than one full turn.

The duration of the procedure can be extended to up to 300 seconds by pressing the 100% key and turning the click wheel clockwise.

1. Open the de-aeration valve by approximately half a turn.
2. Press the 100% key and hold it down until liquid flows out of the de-aeration hose continuously without any bubbles.
3. Close the de-aeration valve finger tight.
   Do not use tools.

The pump is de-aerated.

6.9 Calibrating the pump

- The pump must be connected hydraulically and electrically.
- The pump must be integrated into the dosing process under operating conditions.
- The dosing head and the suction line must be filled with dosing medium.
- The pump must be de-aerated.

Read section Calibration.

1. Stop the pump.
2. Fill a measuring beaker with dosing medium.
   Recommended filling volumes V_1:
   - DDA 7.5-16: 0.3 l
   - DDA 12-10: 0.5 l
   - DDA 17-7: 1.0 l
   - DDA 30-4: 1.5 l
3. Read off and note down the filling volume V_1.
   For example: 300 ml
4. Place the suction line in the measuring beaker.
5. Select **Settings** > **Calibration**. Press **START** to start the calibration process.
6. The pump executes 200 dosing strokes and displays the factory calibration value.
   For example: 125 ml
7. Remove the suction line from the measuring beaker and check the remaining volume V_2.
   For example: 170 ml
8. Calculate the actual dosed volume: $V_d = V_1 - V_2$
   For example: 300 ml - 170 ml = 130 ml
9. Set and confirm V_d with the click wheel.

The pump is calibrated.

6.10 Replacing the pressure sensor

Required tools:
- Torque wrench,
- hexagon key, size 4.0,
- special sensor tool (92836196).

This procedure requires a special sensor tool (92836196). See the Service Kit Catalogue on www. grundfos.com

The numbers in brackets refer to the figure in section Service overview.

See also the Service Kit Instructions (93119772) delivered with the new pressure sensor (92936653).

1. Put on the stipulated personal protective equipment.
2. Disconnect the pump from the power supply.
3. Depressurise the system.
4. Flush the dosing head, if necessary.
5. Disconnect the FCM pressure sensor cable.
6. Disassemble the suction, discharge and deaeration lines.
   Make sure that the returning liquid is safely collected.
7. Remove the cover (8).
8. Loosen the dosing head screws (7) and remove them together with the washers.
9. Remove the dosing head (6).
10. Remove the sensor (20) using the sensor tool.
    a. Pass the cable through the sensor tool and insert it into the slot.

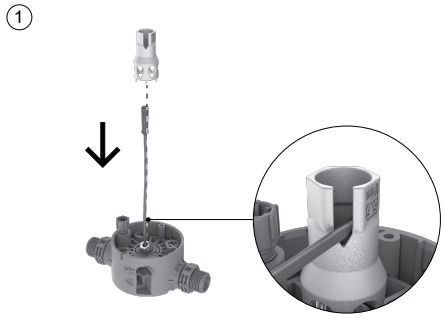

TM087903

    b. Attach the sensor tool to the sensor.
    c. Place a torque wrench with a 17 mm socket on the sensor tool and remove the sensor tool together with the sensor by turning it counterclockwise.

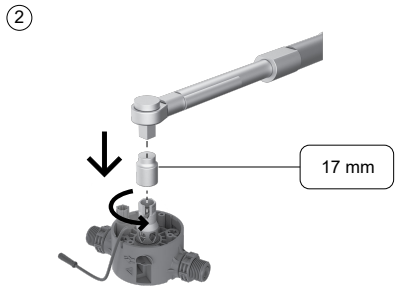

TM087904

    d. Remove the sensor O-ring and dispose of it.

11. Fit the new sensor to the dosing head.
    a. Insert the new sensor into the sensor tool.
    b. Fit a new O-ring.
       Do not use sharp tools.
    c. Screw in the sensor tool with the new sensor manually by turning it clockwise.
    d. Place the torque wrench on the sensor tool and fasten it.
       Torque: 5.5 Nm

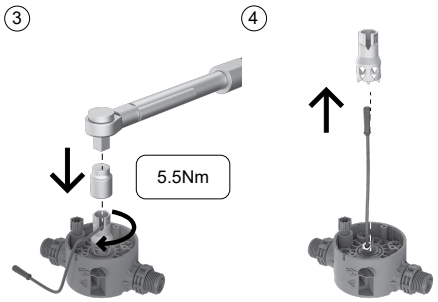

TM087907

    e. Remove the sensor tool.
    f. Insert the sensor cable into the slot in the dosing head.

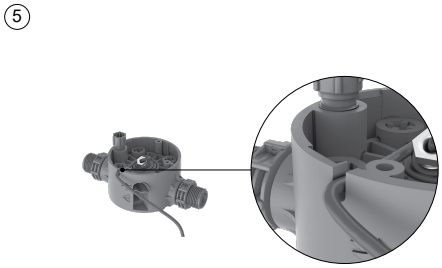

TM087908

12. Attach the dosing head (6).
13. Screw in the dosing head screws (7) with washers manually and cross-tighten them with a torque wrench.
    Torque [Nm]: 4.
14. Attach the cover (8).
15. Connect the FCM pressure sensor cable.
16. Turn on the power supply.
17. Perform sensor calibration.
    See section Calibrating the pressure sensor.
18. Assemble the suction, discharge and deaeration lines.
19. De-aerate the dosing pump.
    See section De-aerating the dosing pump.

Related information

6.4 Service overview
6.8 De-aerating the pump
6.13 Calibrating the pressure sensor

6.11 Pressure monitoring

This section applies to the FCM control variant.

A pressure sensor monitors the pressure in the dosing head. If the pressure falls below the set **Min. pressure** during the discharge phase, a warning is generated and the pump continues to run. If the **Min. pressure alarm** function is activated in the **Settings** > **FlowControl active** > **Pressure monitoring** menu, an alarm is generated and the pump is stopped.

If the pressure exceeds the **Max. pressure** set in the **Settings** > **FlowControl active** > **Pressure monitoring** menu, the pump stops dosing, goes to operating state "Ready" and indicates an alarm.

The pump restarts automatically once the back pressure falls below the set **Max. pressure**.

The back pressure value shown on the display or the measured at the analog output is always the value of the last discharge stroke.

6.12 Pressure setting ranges

WARNING
Pressurised system
Death or serious personal injury
- Install a pressure relief valve in the discharge line to provide protection against high pressure.

The pressure measured in the dosing head is slightly higher than the actual system pressure.

The **Max. pressure** should be set at least 0.5 bar higher than the system pressure.

The **Min. pressure** should be set at least 1 bar less than the **Max. pressure**.

Type	Min. pressure [bar]	Max. pressure [bar]
DDA 7.5-16	2-16	3-17
DDA 7.5-16 (PVC)	2-10	3-11
DDA 12-10	2-10	3-11
DDA 17-7	2-7	3-8
DDA 30-4	2-4	3-5

Both the **Min. pressure** and the **Max. pressure** are adjustable.

By default, the **Max. pressure** is set to the nominal pressure + 1 bar, the **Min. pressure** is set to 2 bar.

6.13 Calibrating the pressure sensor

This section applies to the FCM control variant.

If specific circumstances, such as pressure sensor exchange or extreme air pressure values at the location of the pump, require calibration, the pressure sensor can be calibrated as follows:

1. Put on the stipulated personal protective equipment.
2. Set the pump to operating state "Stop".
3. Depressurise the system.
4. Flush the dosing head, if necessary.
5. Remove the suction line and the suction valve.
   Make sure the returning liquid is safely collected.
   Calibrating the pressure sensor while the suction valve is installed results in incorrect calibration which can cause personal injuries and damage to property.
6. Open **Settings** > **FlowControl active** > **Sensor calibration**.

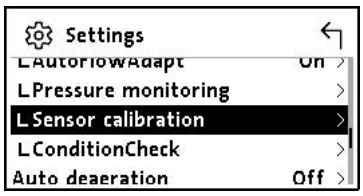

   Make sure the pressure sensor is connected to the pump.
7. Confirm the dialog.

   Calibration is started.

If the calibration was successful, the display shows the dialog **The pressure sensor is now calibrated.**.

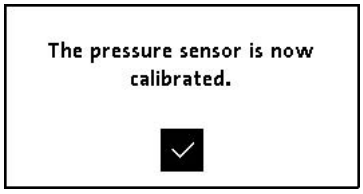

Confirm the dialog.

If the calibration failed, a corresponding dialog appears. Confirm the dialog to start the calibration again.

If the calibration failed, check the connections, the cable and the pressure sensor. Replace all defective parts.

Check whether the suction valve and the drain opening show signs of crystallized dosing liquid.

6.14 Replacing the cube front with PCB

Before replacing the cube front, check the following:

- Check if the display backlight is functioning properly.
- Check if the pump motor functions properly.
- FCM control variant: Check if the pressure signal is available.
- Check the driver board version in the **Info** > **Hardware version** menu.

If one of the above checks is not satisfactory, it is unnecessary to replace the cube front.

Required tool: Torque wrench, TORX PLUS 15 IP.

When the printed circuit board (PCB) in the cube front is broken, the cube front must be replaced.

See also the Service Kit Instructions (93119770) delivered with the new cube front (93091146).

1. Disconnect the pump from the power supply.
2. Loosen the 6 screws on the front of the control cube.
   Torque wrench size: TORX PLUS (15 IP).
3. Remove the yellow sticker from the cube front.
4. Carefully lift the cube front off the control cube.
   Observe the flat band cable.
5. Carefully remove the flat band cable manually.

   ! Do not touch the electronic parts.

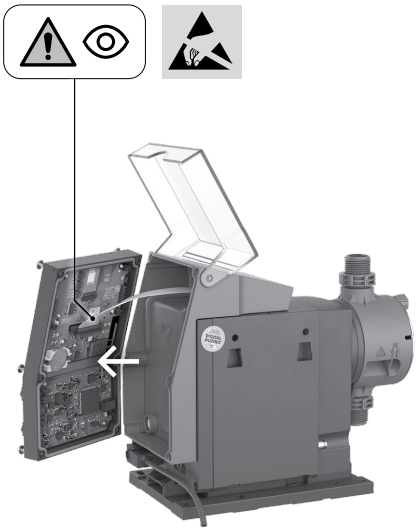

TM087781

6. Remove the cube front and dispose of it according to local legislation.
7. Carefully attach the flat band cable to the new cube front.

   ! Make sure the cable cannot be pinched.

Yes	No
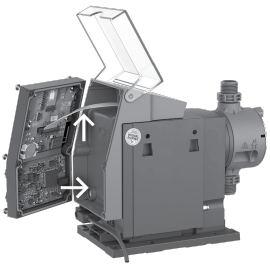	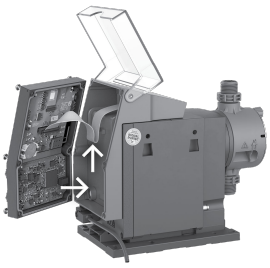
✓	✗

8. Place the new cube front on the control cube.

   ! Make sure the gasket is seated correctly.

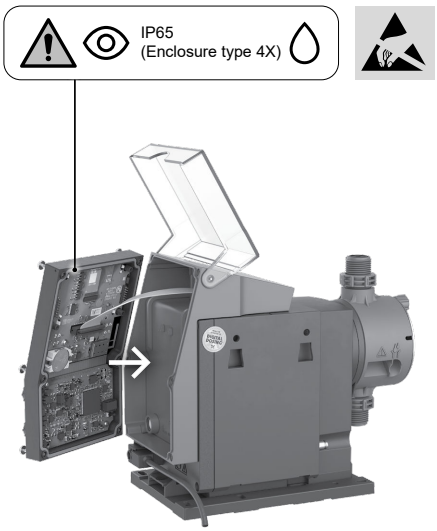

TM087784

9. Fasten the 6 screws crosswise with a torque wrench.
   Torque: 1.3 Nm +/- 0.2.
10. Connect the pump to the power supply.
    Synchronising of the main board with the driver board starts automatically.
    The pump stops dosing.

11. Stick the new sticker onto the joint between the cube front and the cube.

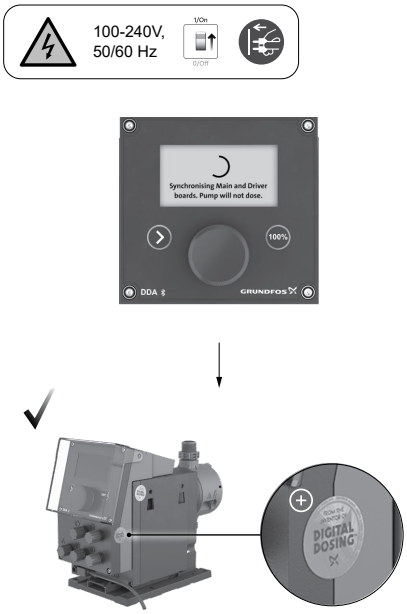

TM087786

12. Update the software with the Grundfos GO app.

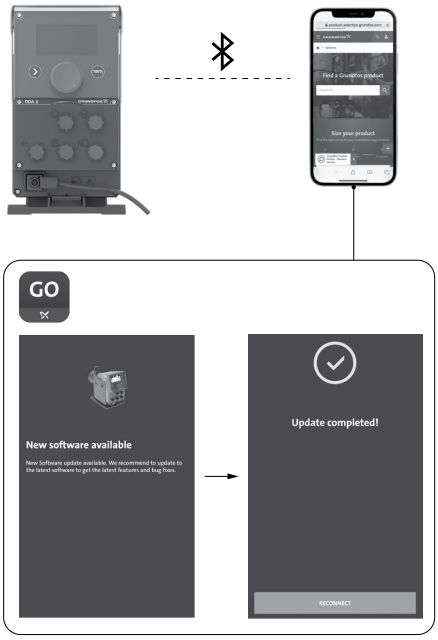

TM087787

6.15 Replacing the battery in the cube front

WARNING
Ingestion hazard
Death or serious personal injury

- Keep new and used batteries out of reach of children.
- Seek immediate medical attention if a battery is suspected to be swallowed or inserted inside any part of the body.
- A swallowed button cell battery can cause internal chemical burns in as little as 2 hours.

WARNING
Chemical hazard
Death or serious personal injury

- Replace the battery immediately when the **RTC battery low** warning appears on the display. If the battery is not replaced, this can lead to under- or overdosing.

Only use the correct type of battery: CR2032, 3 V, non-rechargeable, removable, CE compliant.

Do not touch the electronic parts.

The cube front has a button cell battery for the timer. It must be replaced after a few years.

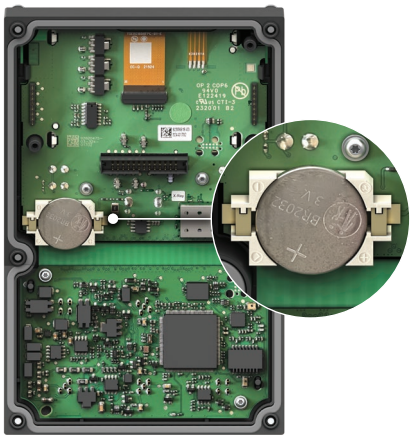

TM087676

If the **RTC battery low** warning is displayed, the battery must be replaced. See also section Faults with error messages.

1. Disconnect the pump from the power supply.
2. Loosen the 6 screws on the front of the control cube.
   Wrench size: TORX PLUS 15 IP
3. Carefully remove the cube front from the control cube.
   Observe the flat band cable.
4. Carefully remove the flat band cable manually.
5. Place the cube front on a table so that the battery is on your left.
6. Insert a small plastic lever or pin into the gap between the battery and the left battery holder.
   The battery pops out.
7. Slide a new button cell battery under the right battery holder. Push the left side of the button cell battery down.
   Battery type CR2032 (3 V).
   The positive pole (+) must be at the top.
8. Carefully reattach the flat band cable.
9. Place the cube front on the control cube
   Make sure that the gasket is positioned correctly.
10. Fasten the 6 screws crosswise.
    Wrench size: TORX PLUS 15 IP.
    Torque: 1.3 Nm.

Related information

9.2 Faults with error messages
9.2.17 RTC battery low warning

6.16 Replacing the power cable

CAUTION
Chemical hazard
Minor or moderate personal injury

- Make sure that the pump has been correctly installed and is ready to be started before you switch on the power supply.
- The enclosure class (IP65 / type 4X) is only guaranteed, if the power cable is correctly installed.
- Do not manipulate or cut the power plug or cable.

1. Disconnect the pump from the power supply.

2. Unscrew the safety screw on the power cable with a crosshead screwdriver.
3. Replace the power cable.
   Observe the orientation.
4. Carefully screw in the safety screw with a torque wrench.
   Torque [Nm]: 0.4 (+ 0.1)

The pump can start automatically when the power supply is switched on.

6.17 Diaphragm leakage

WARNING
Danger of explosion if dosing liquid has entered the pump housing
Death or serious personal injury
- Operation with damaged diaphragm can lead to dosing liquid entering the pump housing.
- In case of diaphragm leakage, immediately separate the pump from the power supply.
- Make sure the pump cannot be started unintentionally.
- Disassemble the dosing head without connecting the pump to the power supply and make sure no dosing liquid has entered the pump housing. Proceed as described in section Disassembling the diaphragm in case of diaphragm leakage.

To avoid any danger resulting from diaphragm leakage, observe the following:

- Perform regular maintenance.
- Do not operate the pump with blocked or soiled drain opening.
  - If the drain opening is blocked or soiled, proceed as described in section Disassembling the diaphragm in case of diaphragm leakage.
- Do not attach a hose to the drain opening. If a hose is attached to the drain opening, it is impossible to recognise escaping dosing liquid.
- Take suitable precautions to prevent harm to health or damage to property from escaping dosing liquid.
- Do not operate the pump with damaged or loose dosing head screws.

If the diaphragm is leaking or broken, dosing liquid leaks from the drain opening on the flange of the dosing head.

In case of diaphragm leakage, the safety diaphragm protects the pump housing against ingress of dosing liquid.

When dosing crystallising liquids, the drain opening can be blocked by crystallisation. If the pump is not taken out of operation immediately, a pressure can build up between the diaphragm and the safety diaphragm. The pressure can press dosing liquid through the safety diaphragm into the pump housing.

Most dosing liquids do not cause any danger when entering the pump housing. Few liquids can cause a chemical reaction with internal parts of the pump. In the worst case, this reaction can produce explosive gases in the pump housing.

Related information

6.1 Maintenance schedule
6.17.1 Disassembling the diaphragm in case of diaphragm leakage
7. Repairs

6.17.1 Disassembling the diaphragm in case of diaphragm leakage

WARNING
Chemical hazard
Death or serious personal injury
- Do not connect the pump to the power supply.
- If the pump must remain connected to the power supply for maintenance, deactivate Bluetooth.

Observe section Diaphragm leakage and section Service.

The numbers in brackets refer to the figure in section Dosing head overview.

1. Put on the stipulated personal protective equipment.
2. If the pump must remain connected to the power supply, press the Start/Stop key to set the pump to operating state "Stop".
3. Depressurise the system.
4. Flush the dosing head, if necessary.
5. Disassemble the suction, discharge and de-aeration lines.
   Make sure that the returning liquid is safely collected.
6. Disconnect the **FlowControl** signal connection, if present.
   See section Product overview.
7. Remove the cover (9).
8. Loosen the screws (8) on the dosing head (7) and remove them together with the washers.
9. Remove the dosing head (7).
10. Grasp the diaphragm (4) with your hands, turn it counter-clockwise and remove it together with the flange (2).
    Do not use tools.
11. Make sure that the drain opening (11) is not blocked or soiled. Clean the drain opening, if necessary.
12. Check the safety diaphragm (1) for wear and damage. Replace the safety diaphragm, if necessary.

If nothing indicates that dosing liquid has entered the pump housing, go on as described in section Reassembling the dosing head, diaphragm and valves.

If dosing liquid has entered the pump housing, proceed as described in section Dosing liquid in the pump housing.

Related information

6.5 Dosing head overview
6.7 Reassembling the dosing head, diaphragm and valves
6.17 Diaphragm leakage
6.17.2 Dosing liquid in the pump housing
8.3 Product overview

6.17.2 Dosing liquid in the pump housing

WARNING
Danger of explosion if dosing liquid has entered the pump housing
Death or serious personal injury
- Immediately separate the pump from the power supply.
- Make sure the pump cannot be started unintentionally.

If dosing liquid has entered the pump housing:

- Send the pump to Grundfos for repair. Observe section Repairs.
- If a repair is not economically justifiable, dispose of the pump. Observe section Disposing of the product.

Related information

7. Repairs
10. Disposing of the product

7. Repairs

WARNING
Chemical hazard
Death or serious personal injury

- The pump housing must only be opened by persons authorised by Grundfos.
- Repairs must only be carried out by authorised and qualified persons.
- Switch off the power supply before carrying out maintenance work and repairs.

Consult your Grundfos service partner. If required, send the pump to Grundfos, together with the safety declaration. Find the safety declaration at the end of this manual. Print out the safety declaration, fill it in and attach it to the pump.

The pump must be cleaned prior to dispatch.
If dosing liquid has possibly entered the pump housing, state that explicitly in the safety declaration. Observe section Diaphragm leakage.

If the above requirements are not met, Grundfos may refuse to accept delivery of the pump. The shipping costs will be charged to the sender.

Related information

6.17 Diaphragm leakage

8. Additional information

8.1 Nameplate

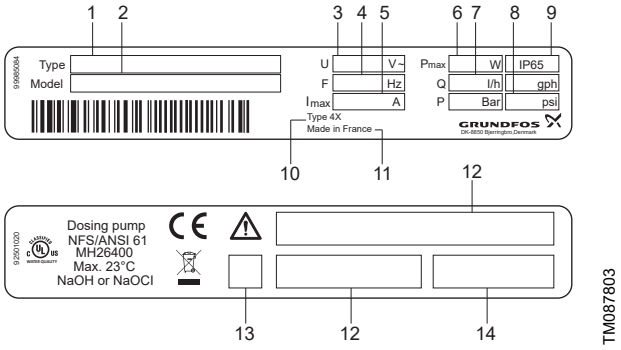

Example of a nameplate

Pos.	Description
1	Type designation
2	Model number
3	Voltage
4	Frequency
5	Max. current consumption
6	Power consumption
7	Max. dosing flow
8	Max. operating pressure
9	IP class
10	Enclosure type
11	Country of origin
12	Approvals
13	Electrical safety marking
14	UK importer address

8.2 Type key

The type key is used to identify the precise pump and is not used for configuration purposes.

Type
DDA 7.5-16 AR-C-PP/V/C-F-31U2U2FG

Nominal dosing capacity [l/h]
DDA **7.5**-16 AR-C-PP/V/C-F-31U2U2FG

Max. pressure [bar]
DDA 7.5-**16** AR-C-PP/V/C-F-31U2U2FG

Control variant	
DDA 7.5-16 **AR-C**-PP/V/C-F-31U2U2FG	
AR-C	Standard with embedded connectivity
FCM-C	AR-C with FlowControl measurement

Dosing head variant	
DDA 7.5-16 AR-C-**PP**/V/C-F-31U2U2FG	
PP	Polypropylene
PV	Polyvinylidene fluoride (PVDF)
SS	Stainless steel 1.4435
PVC	PVC (polyvinyl chloride, only up to 10 bar)

Gasket material	
DDA 7.5-16 AR-C-PP/**V**/C-F-31U2U2FG	
E	EPDM
V	FKM
T	PTFE

Valve ball material	
DDA 7.5-16 AR-C-PP/V/**C**-F-31U2U2FG	
SS	Stainless steel 1.4401
C	Ceramic

Control Cube	
DDA 7.5-16 AR-C-PP/V/C-**F**-31U2U2FG	
F	Front-mounted (change to left or right is possible)

Supply voltage	
DDA 7.5-16 AR-C-PP/V/C-F-**3**1U2U2FG	
3	1 × 100-240 V, 50/60 Hz

Valve type	
DDA 7.5-16 AR-C-PP/V/C-F-3**1**U2U2FG	
1	Standard (not spring-loaded)
2	Spring-loaded (HV version)

Connection, suction/discharge	
DDA 7.5-16 AR-C-PP/V/C-F-31**U2U2**FG	
U2U2	Hose, 4/6 mm, 6/9 mm, 6/12 mm, 9/12 mm
U7U7	Hose 0.17" × 1/4"; 1/4" × 3/8"; 3/8" × 1/2"
AA	Threaded Rp 1/4, female (stainless steel)
VV	Threaded 1/4 NPT, female (stainless steel)
XX	No connection

Connection, suction/discharge	
Installation set [2]	
I001	Hose, 4/6 mm (up to 7.5 l/h, 13 bar)
I002	Hose, 9/12 mm (up to 60 l/h, 9 bar)
I003	Hose, 0.17" × 1/4" (up to 7.5 l/h, 13 bar)
I004	Hose, 3/8" × 1/2" (up to 60 l/h, 10 bar)

[2] Including: 2 pump connections, foot valve, injection unit, 6 m PE discharge hose, 2 m PVC suction hose, 2 m PVC de-aeration hose (4/6 mm).

Power plug	
DDA 7.5-16 AR-C-PP/V/C-F-31U2U2**F**G	
F	EU (Schuko)
B	USA, Canada
G	UK
I	Australia, New Zealand, Taiwan
E	Switzerland
J	Japan
L	Argentina
N	Brazil

Pump design	
G	Grundfos

8.3 Product overview

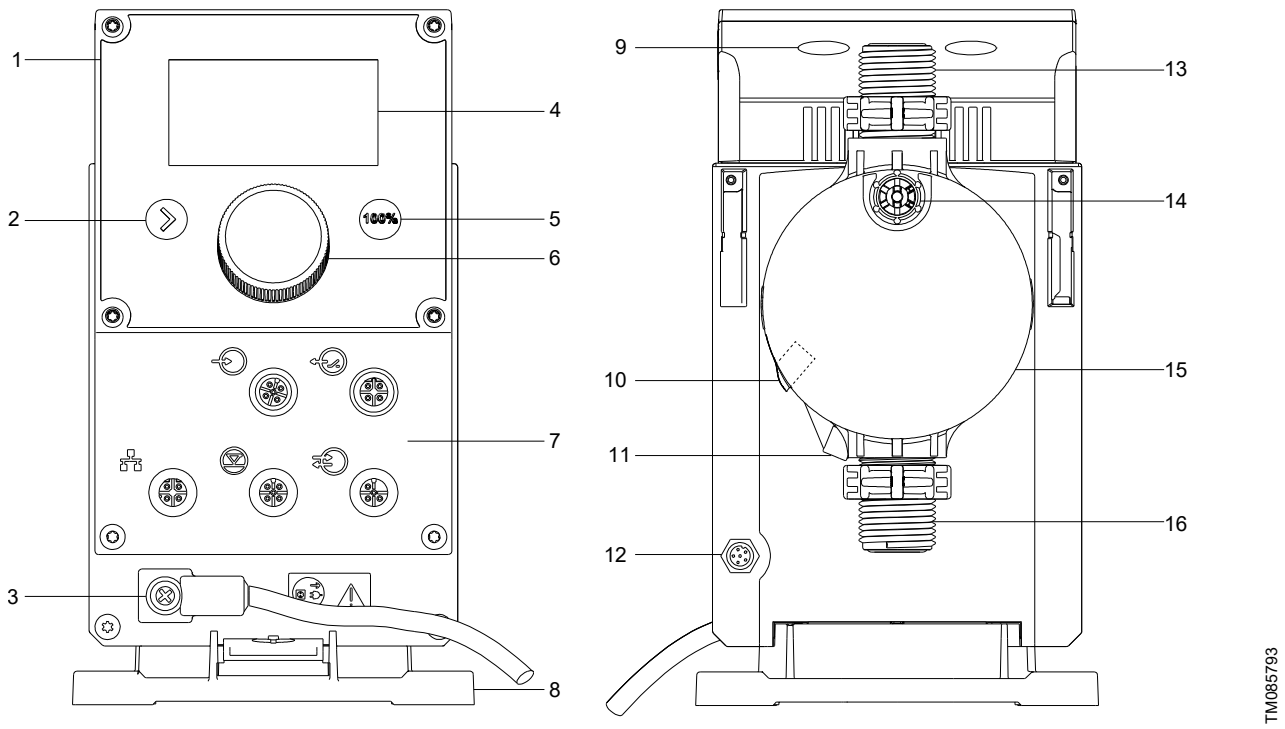

Pos.	Description
1	Control cube
2	Start/Stop key
3	Power supply
4	Graphical LC display
5	100% key
6	Click wheel
7	Signal inputs and outputs
8	Mounting plate
9	Control cube assembly screws
10	Connection for deaeration hose
11	Drain opening
12	FlowControl connection (only FCM)
13	Valve, discharge side
14	Deaeration valve
15	Dosing head
16	Valve, suction side

8.4 Technical data

Mechanical data		7.5-16	12-10	17-7	30-4
Turn-down ratio (setting range)	[1:X]	3000	1000	1000	1000
Max. dosing capacity	[l/h]	7.5	12.0	17.0	30.0
	[gph]	2.0	3.1	4.5	8.0
Max. dosing capacity with SlowMode 50 %	[l/h]	3.75	6.00	8.50	15.00
	[gph]	1.00	1.55	2.25	4.00
Max. dosing capacity with SlowMode 25 %	[l/h]	1.88	3.00	4.25	7.50
	[gph]	0.50	0.78	1.13	2.00
Min. dosing capacity	[l/h]	0.0025	0.0120	0.0170	0.0300
	[gph]	0.0007	0.0031	0.0045	0.0080
Max. operating pressure [3]	[bar]	16	10	7	4
	[psi]	230	150	100	60
Max. stroke frequency [4]	[strokes/min]	190	155	205	180
Stroke volume	[ml]	0.74	1.45	1.55	3.10
Accuracy of repeatability	[%]	± 1 (of setpoint)			
Max. suction lift during operation [5]	[m]	6			
Max. suction lift when priming with wet valves [5]	[m]	2	3	3	2
Min. pressure differential between suction and discharge side	[bar]	1 (FCM-C: 2)			
Max. inlet pressure, suction side	[bar]	2			
Max. viscosity in SlowMode 25 % with spring-loaded valves [6]	[mPas] (= cP)	2500	2500	2000	1500
Max. viscosity in SlowMode 50 % with spring-loaded valves [6]	[mPas] (= cP)	1800	1300	1300	600
Max. viscosity without SlowMode with spring-loaded valves [6]	[mPas]] (= cP)	600	500	500	200
Max. viscosity without spring-loaded valves [6]	[mPas] (= cP)	50	300	300	150
Min. internal hose/pipe diameter suction/discharge side [5] [7]	[mm]	4	6	6	9
Min. internal hose/pipe diameter suction/discharge side (high viscosity) [7]	[mm]	9			
Min./Max. liquid temperature	[°C]	-10/45			
Min./max. ambient temperature	[°C]	0/45			
Min./max. storage temperature	[°C]	-20/70			
Max. relative humidity (non-condensing)	[%]	96			
Max. altitude above sea level	[m]	2000			

3) PVC: up to 10 bar.

4) The maximum stroke frequency varies depending on calibration.

5) Data is based on measurements with water.

6) Maximum suction lift: 1 m, dosing capacity reduced (approx. 30 %).

7) Length of suction line: 1.5 m, length of discharge line: 10 m (at max. viscosity).

Electrical data		7.5-16	12-10	17-7	30-4
Voltage	[V]	100-240 V (- 10 %/+ 10 %), 50/60 Hz			
Length of power cable	[m]	1.5			
Max. inrush current for 2 ms (100 V)	[A]	8			
Max. inrush current for 2 ms (230 V)	[A]	25			
Max. power consumption P_1	[W]	24			
Enclosure class		IP65, enclosure type 4X			
Electrical safety class		II			
Pollution degree		2			

Signal input	7.5-16	12-10	17-7	30-4
Max. load for level input	12 V, 5 mA			
Max. load for external stop input	12 V, 5 mA			
Max. load for pulse input	12 V, 5 mA			

Signal input		7.5-16	12-10	17-7	30-4
Min. pulse length	[ms]	0.5			
Max. pulse frequency	[Hz]	1000			
Impedance at 0/4-20 mA analog input	[Ω]	15			
Accuracy of analog input (full-scale value)	[%]	± 0.5			
Min. resolution of analog input	[mA]	0.007			
Max. resistance in level/pulse circuit	[Ω]	1000			

Signal output		7.5-16	12-10	17-7	30-4
Max. current on relay output (ohmic load)	[A]	0.5			
Max. frequency on relay output	[Hz]	100			
Max. voltage on relay output	[V]	30 VDC / 30 VAC			
Max. voltage on analog output	[V]	24 VDC			
Impedance at 0/4-20 mA analog output	[Ω]	500			
Accuracy of analog output (full-scale value)	[%]	± 0.5			
Min. resolution of analog output	[mA]	0.006			

Weight and size		7.5-16	12-10	17-7	30-4
Weight (PVC, PP, PVDF dosing head)	[kg]	2.5	2.5	2.5	2.7
Weight (stainless-steel dosing head)	[kg]	3.3	3.3	3.3	4.1
Diaphragm diameter	[mm]	44	50	50	74

Sound pressure		7.5-16	12-10	17-7	30-4
Max. sound pressure level	[dB(A)]	60			

Approvals: CE, CSA-US, NSF61, ACS, RCM.

8.5 Hydraulic connection

WARNING
Chemical hazard
Death or serious personal injury

- Observe the safety data sheets and safety instructions of the chemical manufacturer when handling chemicals.
- Wear personal protective equipment when working on the dosing head, connections or lines.

The pressure differential between the suction and discharge side must be at least 1 bar (14.5 psi).

For control variant FCM and for pumps with diaphragm leakage detection, the pressure differential between the suction and discharge side must be at least 2 bar (29 psi).

Tighten the dosing head screws with a torque wrench once before startup and every time the dosing head has been opened.

After 2-5 operating hours, retighten the dosing head screws using a torque wrench.

Torque [Nm]: 4

The dosing head may contain water from the factory check. If you want to dose media that should not come into contact with water, dose another medium beforehand.

Faultless function can only be guaranteed in conjunction with lines supplied by Grundfos.

The lines used must comply with the pressure limits. See section Technical data.

Make sure you comply with the following points:

- Observe the suction lift and the line diameter. See section Technical data.
- Cut hoses and pipes at right angles.
- Make sure there are no loops or kinks in the hoses.
- Keep the suction line as short as possible.
- Route the suction line up towards the suction valve.
- Install a filter in the suction line to protect the entire installation against dirt and reduce the risk of leakage.
- Install a pressure relief valve in the discharge line to provide protection against high pressure.
- Check the condition of the foot valve regularly.
- Only control variant FCM: For discharge quantities below 1 l/h, we recommend the use of an additional spring-loaded valve (approx. 3 bar) on the discharge side for the safe generation of the necessary differential pressure.

Related information

9.1.5 Liquid leakage

8.6 Connecting the hose

1. Push the union nut and the tensioning ring across the hose.
2. Push the cone part fully into the hose.
3. Attach the cone part with the hose to the corresponding pump valve.
4. Tighten the union nut manually. Do not use tools.
   If using PTFE gaskets, retighten the union nuts after 2-5 operating hours.
5. Attach a de-aeration hose to the corresponding connection and run it into a suitable container or collecting tray.
   See also section Product overview.

Example:

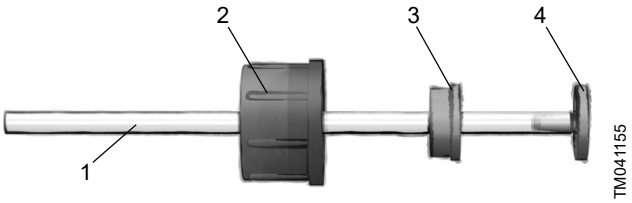

Pos.	Description
1	Hose
2	Union nut
3	Tensioning ring
4	Cone part

8.7 Electrical connection

WARNING
Electric shock
Death or serious personal injury

- All electrical connections must be carried out by a qualified electrician in accordance with local regulations.
- The supply voltage must correspond to the values indicated on the nameplate.
- Electric circuits of external devices connected to the pump inputs must be separated from dangerous voltage by double or reinforced insulation.
- Switch off the power supply before starting any work on the pump.
- Make sure the power supply cannot be switched on unintentionally.
- Do not manipulate or cut the power plug or cable.

CAUTION
Chemical hazard
Minor or moderate personal injury

- Make sure the pump has been correctly installed and is ready to be started before you switch on the power supply.
- The pump can start automatically when the power supply is switched on.

The enclosure class (IP65/enclosure type 4X) is only guaranteed if plugs or protective caps are correctly installed.

The power plug is for separating the pump from the power supply.

8.8 Signal connections

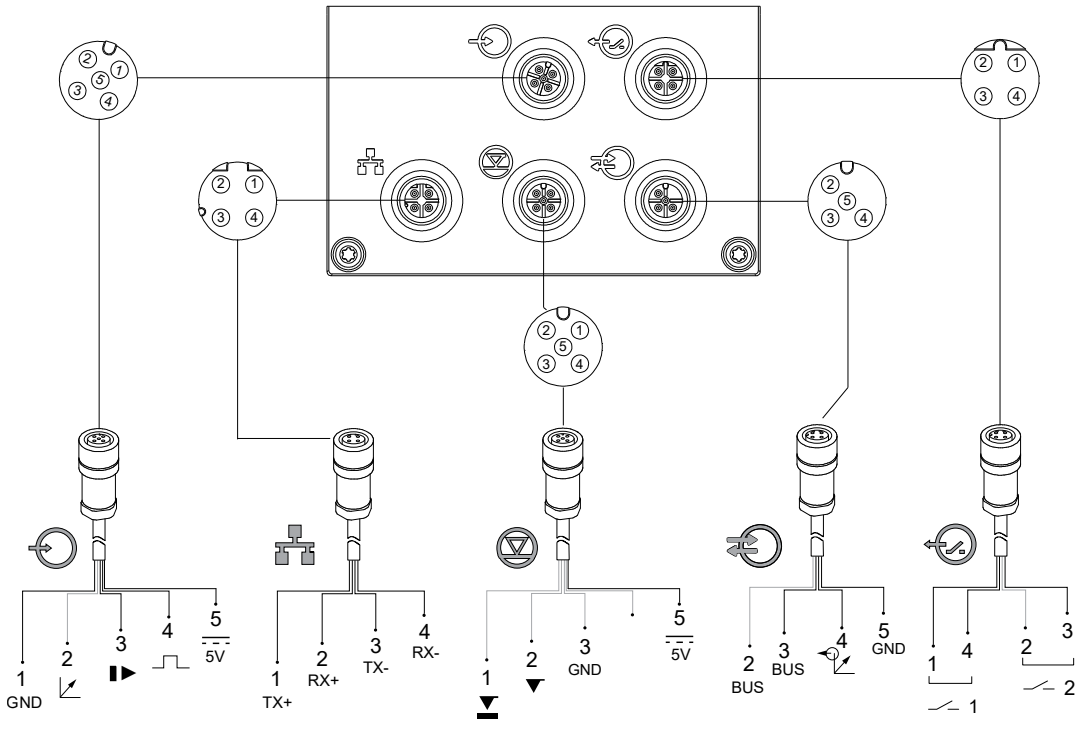

Input: Analog, External stop, Pulse

Function	Pins				
	1/brown	2/white	3/blue	4/black	5/yellow/ green*8.8 Signal connections*
Analog	GND / (-) mA	(+) mA			
External stop	GND		X		
Pulse	GND			X	

Relay outputs

Function	Pins			
	1/brown	2/white	3/blue	4/black
Relay 1	X			X
Relay 2		X	X	

Ethernet RJ45

Function	Pins			
	1/green/white	2/orange/white	3/green	4/orange
TX+ / TX-	X		X	
RX+ / RX-		X		X

Level signals: Empty signal, Low-level signal

Function	Pins				
	1	2	3	4	5
Low-level signal	X		GND		
Empty signal		X	GND		

GENIbus, Analog output, Modbus RTU

Function	Pins			
	2/white	3/blue	4/black	5/yellow/green
GENIbus / Modbus RTU	RS-485 A	RS-485 B		RS-485 Y
Analog output			(+) mA	GND / (-) mA

Cable selection

	Cable 1 [8] **Analog/External stop/ Pulse**	**Cable 2 Level input**	**Cable 3 GENIbus, Analog output**	**Cable 4 Relay output**	**Cable 5 Ethernet**
Product No.	• 2 m cable: 96609014 • 5 m cable: 96609016	See section about suction lances and foot valves with level indication in Accessories.	• 2 m cable: 96632921 • 5 m cable: 96632922	• 2 m cable: 96609017 • 5 m cable: 96609019	• 5 m cable: 93262162

8) When using the 5 V output, a 5-pin cable is needed: 2 m cable (PN 96632921) and 5 m (PN 96632922).

9. Fault finding

9.1 General faults

9.1.1 Dosing flow too high

Cause	Remedy
The inlet pressure is higher than the back pressure.	• Install an additional spring-loaded valve on the discharge side. Approx. 3 bar • Increase the pressure differential.
The calibration is incorrect.	• Calibrate the pump. See section Calibrating the pump.

Related information

6.9 Calibrating the pump

9.1.2 Dosing flow too low or no dosing flow

Cause	Remedy
There is air in the dosing head.	• De-aerate the pump.
The dosing diaphragm is damaged.	• Replace the dosing diaphragm. See section Service.
The dosing lines are leaky or broken.	• Check the lines. • Repair the lines, if necessary.
The valves are leaky or blocked.	• Check the valves. • Clean the valves. • Replace the valves, if necessary.
The valves are installed incorrectly.	• Make sure the arrow on the valve housing is pointing in the direction of flow. • Make sure all O-rings are installed correctly.
The suction line is blocked.	• Clean the suction line. • Install a filter on the suction line.
The suction lift is too high.	• Reduce the suction lift. • Enable **SlowMode**.
The viscosity is too high.	• Enable **SlowMode**. • Use lines with a larger diameter. • Install spring-loaded valves on the dosing head.
The calibration is incorrect.	• Calibrate the pump. See section Calibrating the pump.
The de-aeration valve is open.	• Close the de-aeration valve.

Related information

6. Service

6.9 Calibrating the pump

9.1.3 Irregular dosing

Cause	Remedy
The valves on the dosing head are leaky or blocked.	• Tighten up the valves. • Replace the valves, if necessary. See section Service.
There are fluctuations in the back pressure.	• Keep the back pressure constant. • FCM variant: Activate **AutoFlowAdapt**.

Related information

6. Service

9.1.4 Liquid is leaking from the drain opening

Cause	Remedy
The dosing diaphragm is damaged.	• Immediately separate the pump from the power supply. • Observe section Service and section Diaphragm leakage.

Related information

6. Service

6.17 Diaphragm leakage

9.1.5 Liquid leakage

Cause	Remedy
The dosing head screws are not tightened.	• Tighten up the dosing head screws. See section Hydraulic connection.
The valves are not tightened.	• Tighten up the valves and union nuts. See section Hydraulic connection.

Related information

8.5 Hydraulic connection

9.1.6 Pump is not sucking in liquid

Cause	Remedy
The suction lift is too high.	• Reduce the suction lift. • Provide positive inlet pressure.
The back pressure is too high.	• Open the de-aeration valve.
The valves are soiled.	• Flush the system. • Replace the valves, if necessary. See section Service.

Related information

6. Service

9.1.7 CIM or fieldbus does not connect to the pump

Cause	Remedy
The installed fieldbus cannot communicate with the pump.	• Check in the **Settings** > **Communication** menu if a CIM protocol is displayed. - If only a **CIM ID** is displayed, the CIM module is not detected. There might be a cable break or another issue. - If **CIM - Unsupported** is displayed, the CIM module is not supported. Use another CIM module that is supported or check the configuration of your CIM module in the respective Functional Profile.

9.2 Faults with error messages

In the event of faults, a warning or an alarm is triggered. The corresponding fault icon flashes on the **Idle screen**.

CAUTION
Chemical hazard
Minor or moderate personal injury
- Before entering the **Events log** menu, make sure that the pump is in operating state "Stop".
- The pump can start automatically when the power supply is switched on.

Press the click wheel to open the **Events log** menu.

A yellow display indicates a warning, and the pump continues running.

A red display indicates an alarm, and the pump stops dosing. For some alarms, the pump tries to restart periodically. When the cause of the alarm has been remedied, the pump starts automatically and switches back to normal operation.

CAUTION
Chemical hazard
Minor or moderate personal injury
- Before remedying the cause of the fault, make sure that the pump is ready to be started.
- The pump can start automatically when the power supply is switched on.

Before starting work on the pump, make sure that the pump is in operating state "Stop" or disconnected from the power supply.

Make sure that the system is depressurised.

The last 10 faults are stored in the **Events log** menu. When a new fault occurs, the oldest fault is deleted. The time and cause of the fault are displayed.

The list of faults can be deleted at the beginning of the list.

If there is a service request message, this appears when the **Events log** menu is opened. Press the click wheel to temporarily close the message. See section Service system.

Related information

6.2 Service system

9.2.1 Empty alarm

The **Empty** alarm icon is shown on the display:

Cause	Remedy
The dosing tank is empty.	• Fill the dosing tank. • Check the plug connection. See section Signal connections. • Check the contact setting (NO or NC).

Related information

8.8 Signal connections

9.2.2 Low level warning

The **Low level** warning icon is shown on the display:

Cause	Remedy
The dosing tank is almost empty.	• Fill the dosing tank. • Check the plug connection. See section Signal connections. • Check the contact setting (NO or NC).

Related information

8.8 Signal connections

9.2.3 Overpressure alarm

The **Overpressure** alarm icon is shown on the display:

Cause	Remedy
The discharge valve is blocked.	• Replace the discharge valve if necessary. See section Service.
The isolating valve on the discharge side is closed.	• Check the flow direction. See the arrow on the valves. • Open the isolating valve on the discharge side.
The back pressure exceeds the maximum operating pressure.	• Reduce the back pressure. See section Technical data.
Pressure peaks occur due to the high viscosity of the dosing medium.	• Enlarge the diameter of the discharge line.
The maximum pressure is set too low.	• Change the pressure setting. See sections Pressure monitoring and Pressure setting ranges.

Related information

6. Service
6.12 Pressure setting ranges
8.4 Technical data

9.2.4 Low diff. pressure warning or alarm

Depending on the setting, the **Low diff. pressure** warning or alarm icon is shown on the display:

Cause	Remedy
The dosing diaphragm is damaged.	• Separate the pump from the power supply. • Replace the diaphragm. See section Service.
The discharge line is broken.	• Check the discharge line. Repair it, if necessary.
The pressure differential between suction and discharge side is too low.	• Install an additional spring-loaded valve on the discharge side. Approx. 3 bar
There is leakage in the pressure loading valve at Q < 1 l/h.	• Install an additional spring-loaded valve on the discharge side. Approx. 3 bar

Cause	Remedy
The de-aeration valve is open.	• Close the de-aeration valve finger tight. Do not use tools.

Related information

6. Service

9.2.5 Air bubbles warning

The **Air bubbles** warning icon is shown on the display:

Cause	Remedy
The suction line is leaky or broken.	• Check the suction line. Repair it, if necessary. • Provide positive inlet pressure. Place the dosing tank above the pump.
The dosing medium is strongly degassing.	• Enable **SlowMode**.
The dosing tank is empty.	• Fill the dosing tank.

9.2.6 Cavitation warning

The **Cavitation** warning icon is shown on the display:

Cause	Remedy
The suction line is blocked or constricted or squeezed.	• Check the suction line. • Open the isolating valve, if necessary.
The suction valve is blocked or constricted.	• Check the suction valve.
The suction lift is too high.	• Reduce the suction lift.
The viscosity of the dosing medium is too high.	• Enable **SlowMode**. • Increase the suction line diameter.

9.2.7 Suct valve leak warning

The **Suct valve leak** warning icon is shown on the display:

Cause	Remedy
The suction valve is leaky.	• Check the suction valve. Tighten it up, if necessary. • Check the O-ring. • Replace the valve, if necessary. See section Service.
The suction valve is dirty.	• Flush the system. • Install a filter on the suction line.
The de-aeration valve is open.	• Close the de-aeration valve finger tight. Do not use tools.

Related information

6. Service

9.2.8 Disch valve leak warning

The **Disch valve leak** warning icon is shown on the display:

Cause	Remedy
The discharge valve is leaky.	• Check the discharge valve. Tighten it up, if necessary. • Check the O-ring. • Replace the valve, if necessary.
The discharge valve is dirty.	• Flush the system. • Install a filter in the suction line.
The pressure loading valve is leaky.	• Check the pressure loading valve. Tighten it up, if necessary. • Replace the valve, if necessary. See section Service. • Install a spring-loaded valve on the discharge side.
The de-aeration valve is open.	• Close the de-aeration valve finger tight. Do not use tools.

Related information

6. Service

9.2.9 Flow deviation warning

The **Flow deviation** warning icon is shown on the display:

Cause	Remedy
There is considerable deviation between target flow and actual flow.	• Check the installation.
The dosing pump is not or is incorrectly calibrated.	• Calibrate the dosing pump. See section Calibrating the pump.

Related information

6.9 Calibrating the pump

9.2.10 Pressure sensor warning

The **Pressure sensor** warning icon is shown on the display:

Cause	Remedy
The **FlowControl** cable is broken.	• Check the plug connection. See section Signal connections. • If the **FlowControl** connection at the pump is damaged, send the pump for repair. See section Repairs.
The pressure sensor is defective.	• Replace the pressure sensor. See section Replacing the pressure sensor.
The pressure sensor is not correctly calibrated.	• Calibrate the pressure sensor correctly. See section Calibrating the pressure sensor.

Related information

6.10 Replacing the pressure sensor

6.13 Calibrating the pressure sensor

7. Repairs

8.8 Signal connections

9.2.11 Motor blocked alarm

The **Motor blocked** alarm icon is shown on the display:

Cause	Remedy
The back pressure exceeds the nominal pressure.	• Reduce the back pressure.
The diaphragm is installed incorrectly.	• Install the diaphragm correctly. See section Service.
The gear is damaged.	• Arrange for repair of the gear. Contact your Grundfos service partner.
There is a hall sensor failure.	• Contact your Grundfos service partner.
There is a motor failure.	• Contact your Grundfos service partner.

Related information

6. Service

9.2.12 Bus error alarm

The **Bus error** alarm icon is shown on the display:

BUS

Cause	Remedy
There is a fieldbus communication error.	• Check the cables for correct specification or damage. • Replace the cables, if necessary. • Check the routing and shielding of the cables. • Correct them, if necessary.

9.2.13 CIU alarm

The **CIU** alarm icon is shown on the display:

Cause	Remedy
There is a CIU connection error.	• Check the plug connection.
The CIU is faulty.	• Replace the CIU.

9.2.14 Sensor signal alarm

The **Sensor signal** alarm icon is shown on the display:

Cause	Remedy
There is a defect in the 4-20 mA analog cable (input current < 2 mA).	• Check the cable and plug connections. • Replace cable and plug, if necessary. • Check the signal transmitter.

9.2.15 Stop after power failure alarm

The **Stop after power failure** alarm icon is shown on the display:

Cause	Remedy
The **Stop after power failure** function is enabled and the power supply was switched on or re-established after power failure.	• Check the power supply and the power cable.

9.2.16 Overcurrent warning

The **Overcurrent** warning icon is shown on the display:

A current of 22.5 mA on the analog current input is indicated.

Cause	Remedy
The flow sensor is defective.	• Measure the actual current signal with a multimeter. • If the indicated current is still 22.5 mA, replace the flow sensor.
The pump is defective.	• Remove the sensor cable and check the indicated current. • If the indicated current is still 22.5 mA, contact your Grundfos service partner.

9.2.17 RTC battery low warning

WARNING
Ingestion hazard
Death or serious personal injury

- Keep new and used batteries out of reach of children.
- Seek immediate medical attention if a battery is suspected to be swallowed or inserted inside any part of the body.
- A swallowed button cell battery can cause internal chemical burns in as little as 2 hours.

WARNING
Chemical hazard
Death or serious personal injury

- Replace the battery immediately when the **RTC battery low** warning appears on the display. If the battery is not replaced, this can lead to under- or overdosing.

The **RTC battery low** warning icon is shown on the display:

Cause	Remedy
The battery in the cube front is almost empty.	• Replace the battery in the cube front immediately. See section Replacing the battery in the cube front.

Related information

6.15 Replacing the battery in the cube front

9.2.18 Service now warning

The **Service now** warning icon is shown on the display:

Cause	Remedy
The time interval for service has expired.	• Perform service. See section Service.

Related information

6. Service

10. Disposing of the product

This product or parts of it must be disposed of in an environmentally sound way.

1. Use the public or private waste collection service.
2. If this is not possible, contact the nearest Grundfos company or service workshop.
3. Dispose of the waste battery through the national collective schemes. If in doubt, contact your local Grundfos company.

The crossed-out wheelie bin symbol on a product means that it must be disposed of separately from household waste. When a product marked with this symbol reaches its end of life, take it to a collection point designated by the local waste disposal authorities. The separate collection and recycling of such products will help protect the environment and human health.

See also end-of-life information at *www.grundfos.com/product-recycling*.

11. Document quality feedback

To provide feedback about this document, use your smart device to scan the QR code.

FEEDBACK93079510

Click here to submit your feedback

1. Safety declaration

- Please copy, fill in and sign this sheet and attach it to the product returned for service.
- Fill in this document using English or German language.

Fault description

- Please give a short description of the fault and indicate if the diaphragm is damaged:

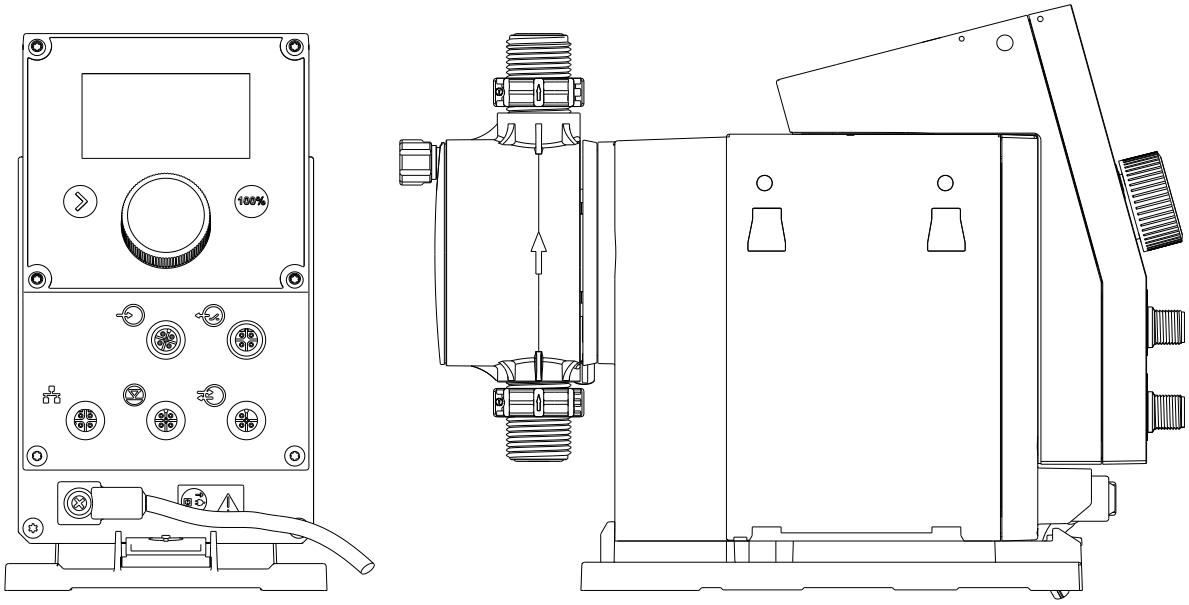

Declaration

We hereby declare that this product is free from hazardous chemicals, biological and radioactive substances:

Type designation (see nameplate):
Product number:

The product was used with the following dosing medium:

No dosing medium or water:
A chemical solution, name:

Date and signature:

Company stamp:

© 2025 Grundfos Holding A/S, all rights reserved.

Trademarks displayed in this material, including but not limited to Grundfos and the Grundfos logo, are registered trademarks owned by The Grundfos Group.

93079510 **06.2025**

ECM: 1426466