Data booklet

TP

In-line circulator pumps

50 Hz China

GRUNDFOS

Table of contents

1. Pump data 3
Introduction 3
Identification. 4

2. Performance range 6
Performance range, 2-pole, PN 16 6
Performance range, 4-pole, PN 16 7

3. Product range. 8
Product range, 2-pole, PN 16 8
Product range, 4-pole, PN 16 10

4. Operating conditions 13
System and test pressures. 13
Sound pressure level. 13
Ambient temperature. 13
Installation altitude 14

5. Pumped liquids 15
Pumped liquids. 15
Liquid temperature 15
List of pumped liquids 15
Recommended shaft seal for water-glycol mixture 18

6. TP Series 300 pumps 19
Technical data 19
Construction. 19
Materials 20
Mechanical shaft seal 20
Connections. 20
Features and benefits 20

7. Motor data 21
Motors. 21

8. Installation 22
Mechanical installation. 22
Electrical installation 27

9. Flange forces 28

10. Flanges for TP pumps 29
Flange dimensions 29

11. Curve charts. 30
How to read the curve charts 30
Curve conditions. 31

12. Performance curves and technical data. . . 32
TP, 2-pole, PN 16 32
TP, 4-pole, PN 16 50

13. Minimum efficiency index 80
TP, 2-pole, PN 16 80
TP, 4-pole, PN 16 81

14. Accessories 84
Counter-flanges 84
Base plates 87

15. Minimum inlet pressure - NPSH 88
TP, 2-pole, PN 16 89
TP, 4-pole, PN 16 91

16. Key application data 94
Operating conditions 94

17. Grundfos Product Center 97

18. Document quality feedback. 98

1. Pump data

Introduction

TP pumps are designed for applications such as:

- district heating systems
- heating systems
- air-conditioning systems
- district cooling systems
- water supply
- industrial processes
- industrial cooling.

TP, mains-operated pumps

TP Series 300 with flange connection

We offer the following version:

- 16-bar version with DN 32 to DN 350 flanges and motor sizes from 0.25 to 315 kW

For further information, see section TP Series 300 pumps.

Related information

6. TP Series 300 pumps

Identification

Type key

Example of type key: TPED 65-120/2 S-A-F-A-BQQE-GDB														
Pos.	1	2	3	4	5	6	7	8	9	10	11	12	13	14
Code	TP	E	D	65	-120	/2	S	-A	-F	-A	-BQQE	-G	D	B

Pos.	Description
1	Pump range
2	Electronically speed-controlled pump, Series 1000, 2000
3	Twin-head pump
4	Nominal diameter of inlet and outlet ports, DN
5	Nominal maximum head [dm]
6	Pole number
7	Code for pump version. The codes may be combined: [Blank]: TPE Series 1000 with MGE motor and without sensor S: TPE Series 2000 with factory-fitted differential-pressure sensor NC: TPE Series 1000 with Siemens/Innomotics motor with integrated CUE SC: TPE Series 2000 with built-in differential-pressure sensor and Siemens/Innomotics motor with integrated CUE
8	Code for pump version. The codes may be combined: A: Basic version A3: PN 25 flange B: Oversize motor (+E): With ATEX approval, certificate or test report, the second character of the code for pump version is an E I: PN 6 flange X: Special version
9	Code for pipe connection: F: DIN flange O: Union
10	Code for materials: A: Basic version (Cast-iron pump housing with Cast-iron/ stainless steel 1.1301/Composite PES/PP 30 % GF impeller) B: Cast-iron pump housing with brass/bronze impeller I: Stainless steel 1.4308 housing and motor stool (with Composite PES/PP 30 % GF impeller) R: Cast-iron pump housing with stainless steel 1.4308 impeller S: Cast-iron pump housing with stainless steel 1.4408 impeller O: Ductile cast-iron pump housing with cast-iron impeller Y: Ductile cast-iron pump housing with brass/bronze impeller Q: Ductile cast-iron pump housing with stainless steel 1.4408 impeller Z: Bronze pump housing and motor stool (with stainless steel 1.4301 impeller)
11	Code for shaft seal including other plastic and rubber pump parts, except the neck ring. See Codes for shaft seal.
12	Code for rated motor power [kW]. See Codes for rated motor power.
13	Code for phase and voltage or other information [V]. See Codes for phase and voltage or other information.
14	Code for speed variant [rpm]. See Codes for speed variant.

Codes for shaft seal

Example: BQQE

Code	Type	Explanation
B		Grundfos type designation
	A	O-ring seal with fixed seal driver
	B	Rubber bellows seal
	D	O-ring seal, balanced
	G	Bellows seal with reduced seal faces
	R	O-ring seal with reduced seal faces
Q		Material of rotating face
	A	Carbon, antimony-impregnated
	B	Carbon, resin-impregnated
	Q	Silicon carbide
Q		Material of stationary seat
	B	Carbon, resin-impregnated
	Q	Silicon carbide
	U	Tungsten carbide
E		Material of secondary seal
	E	EPDM
	P	NBR rubber
	V	FKM
	F	FXM

Codes for rated motor power

Code	Description	
	[hp]	[kW]
A	0.16	0.12
B	0.25	0.18
C	0.33	0.25
D	0.5	0.37
E	0.75	0.55
F	1	0.75
G	1.5	1.1
H	2	1.5
I	3	2.2
J	4	3
K	5 (5.5 [1])	3.7 (4 [1])
L	7.5	5.5
M	10	7.5
N	15	11
O	20	15
P	25	18.5
Q	30	22
R	40	30
S	50	37
T	60	45
U	75	55
V	100	75
W	125	90
X	Bare shaft pump	
Y	> 200 [2]	> 150 [2]
1	150	110
2	175	132
3	200	150
4	215 [3]	160 [3]
5	250 [3]	185 [3]

1) Value in bracket is for the standard IEC motor size. Value outside bracket is for the motor size according to NEMA standards.

2) Used for pumps where the pump shaft input power exceeds 200 hp (150 kW) and is not regulated under the DOE pump rule.

3) Special cases with power sizes above 200 hp (150 kW) which are still regulated under the DOE pump rule. For example: Pump has a P2 value of 198 hp (147.6 kW) in its duty point (in DOE scope) but customer wants the 215 hp (160 kW) motor instead of the 200 hp (150 kW). The pump is in scope of the DOE regulation and requires a PEI value and a motor code.

Codes for phase and voltage or other information

Code	Description
A	E-motor (ECM [4]), 1 × 200-240 V
B	E-motor (ECM [4]), 3 × 200-240 V
C	E-motor (ECM [4]), 3 × 440-480 V
D	E-motor (ECM [4]), 3 × 380-500 V
V	Intended for use with external VFD only, asynchronous motor
W	Not for sale in North America
X	No motor or US DOE regulated motor (CC marked motor)
Y	Out of DOE scope
Z	E-motor, asynchronous motor

4) ECM: Electronically Commutated Motor.

Codes for speed variant

Code	Description
A	1450-2200 RPM, E-motor (ECM [5])
B	2900-4000 RPM, E-motor (ECM [5])
C	4000-5900 RPM, E-motor (ECM [5])
1	2-pole, 50 Hz (Asynchronous motor)
2	2-pole, 60 Hz (Asynchronous motor)
3	4-pole, 50 Hz (Asynchronous motor)
4	4-pole, 60 Hz (Asynchronous motor)
5	6-pole, 50 Hz (Asynchronous motor)
6	6-pole, 60 Hz (Asynchronous motor)
7	8-pole, 50 Hz (Asynchronous motor)
8	8-pole, 60 Hz (Asynchronous motor)

5) ECM: Electronically Commutated Motor.

2. Performance range

Performance range, 2-pole, PN 16

See section Performance curves and technical data for performance curves.

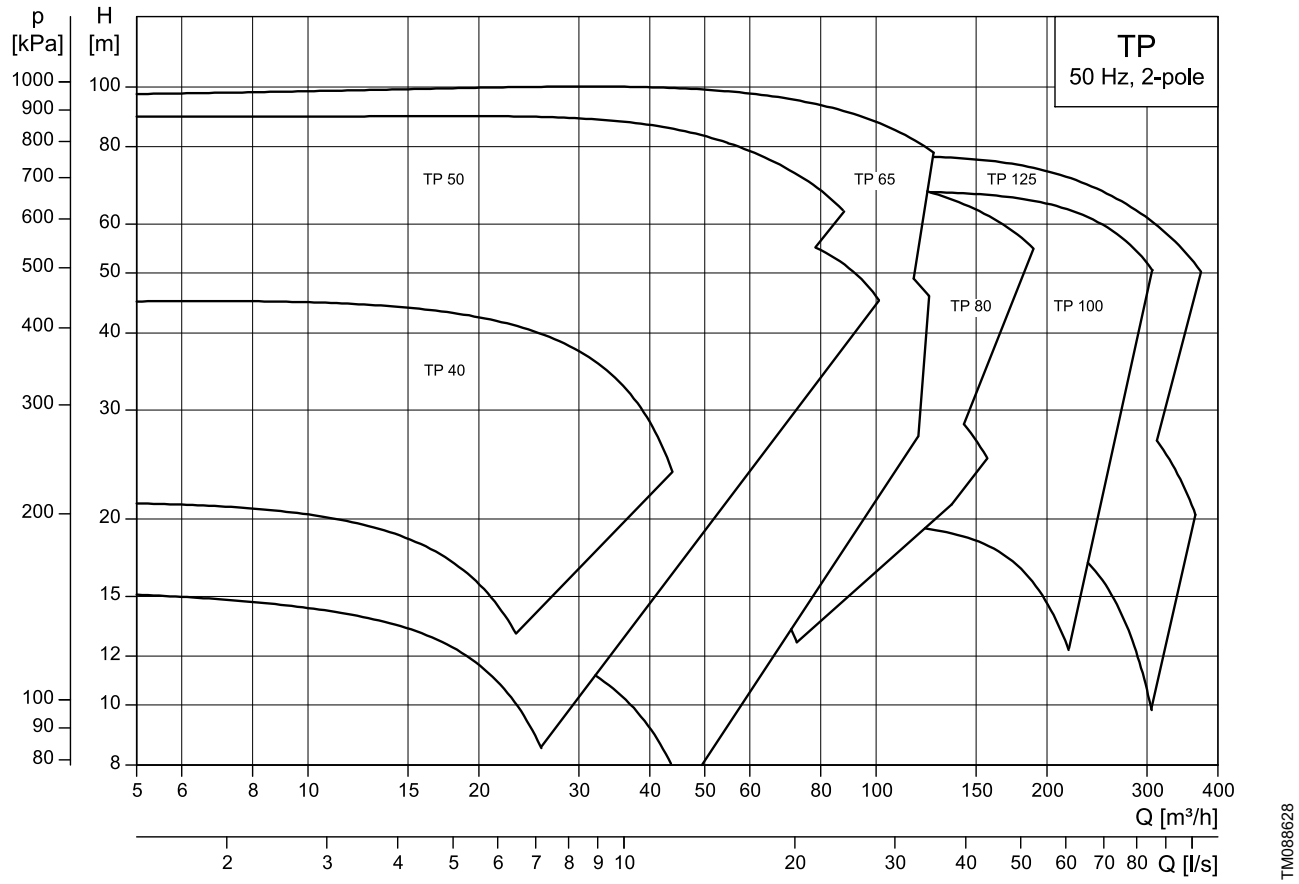

Note: All QH curves apply to single-head pumps. For further information about curve conditions, see section Curve conditions.

Related information

Curve conditions

Performance range, 4-pole, PN 16

See section Performance curves and technical data for performance curves.

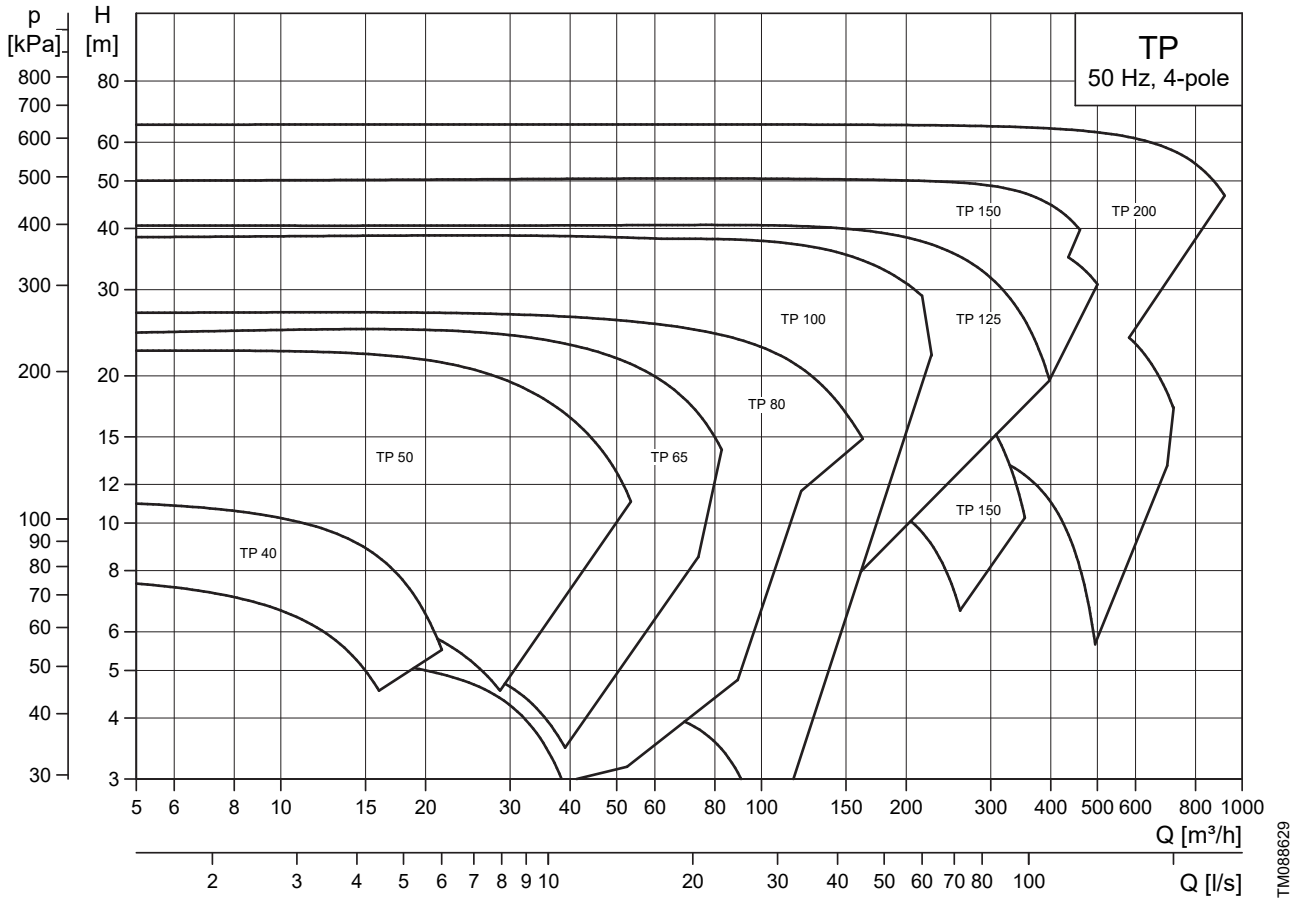

Note: All QH curves apply to single-head pumps. For further information about curve conditions, see section Curve conditions.

Related information

Curve conditions

3. Product range

Product range, 2-pole, PN 16

● Standard.

Pump type	TPE Series 1000	TPE Series 2000	Design			Shaft seal					Pressure stage				Materials												Mains-operated motor			Electronically speed-controlled motor	
															Pump housing								Impeller				Voltage [V]			Voltage [V]	
			TP Series 100	TP Series 200	TP Series 300	BQBE	BAQE	BQQE	DQQE	DAQF	PN 6	PN 10	PN 16	PN 25	Cast iron	EN-GJL-150	Cast iron	EN-GJL-200	Cast iron EN-GJL-250	Nodular cast iron EN-GJS-400-18-LT	Bronze [6]	Stainless steel	Stainless steel	Cast iron	Composite	Bronze	1 × 220-230 V	3 × 220-240 ΔV/ 380-415 YV	3 × 380-415 ΔV/ 660-690 YV [7]	1 × 200-240 V	3 × 380-480 V
																											P2 [kW]	P2 [kW]	P2 [kW]	P2 [kW]	P2 [kW]
TP 40-205/2					●		●	●					●						●				●	●				1.5			
TP 40-245/2					●		●	●					●						●				●	●				2.2			
TP 40-305/2					●		●	●					●						●				●	●				3			
TP 40-355/2					●		●	●					●						●				●	●					4		
TP 40-425/2					●		●	●					●						●				●	●					5.5		
TP 50-155/2					●		●	●					●						●				●					1.1			
TP 50-195/2					●		●	●					●						●				●					1.5			
TP 50-235/2					●		●	●					●						●				●					2.2			
TP 50-245/2					●		●	●					●						●				●	●					4		
TP 50-275/2					●		●	●					●						●				●					3			
TP 50-305/2					●		●	●					●						●				●	●					5.5		
TP 50-395/2					●		●	●					●						●				●	●					7.5		
TP 50-405/2					●		●	●					●						●				●						11		
TP 50-435/2					●		●	●					●						●				●	●					11		
TP 50-515/2					●		●	●					●						●				●	●					15		
TP 50-585/2					●		●	●					●						●				●	●					18.5		
TP 50-655/2					●		●	●					●						●				●						15		
TP 50-775/2					●		●	●					●						●				●						18.5		
TP 50-885/2					●		●	●					●						●				●						22		
TP 65-145/2					●		●	●					●						●				●	●				1.5			
TP 65-185/2					●		●	●					●						●				●	●				2.2			
TP 65-215/2					●		●	●					●						●				●	●				3			
TP 65-255/2					●		●	●					●						●				●	●					4		
TP 65-265/2					●		●	●					●						●				●						5.5		
TP 65-325/2					●		●	●					●						●				●						7.5		
TP 65-345/2					●		●	●					●						●				●						7.5		
TP 65-415/2					●		●	●					●						●				●						11		
TP 65-435/2					●		●	●					●						●				●						15		
TP 65-445/2					●		●	●					●						●				●						11		
TP 65-535/2					●		●	●					●						●				●						15		
TP 65-615/2					●		●	●					●						●				●						18.5		
TP 65-635/2					●		●	●					●						●				●	●					22		
TP 65-675/2					●		●	●					●						●				●						22		
TP 65-775/2					●		●	●					●						●				●	●					30		
TP 65-945/2					●		●	●					●						●				●	●					37		
TP 80-235/2					●		●	●					●						●				●						4		
TP 80-245/2					●		●	●					●						●				●						7.5		
TP 80-265/2					●		●	●					●						●				●						5.5		
TP 80-305/2					●		●	●					●						●				●						11		

Pump type	TPE Series 1000	TPE Series 2000	Design			Shaft seal					Pressure stage				Materials											Mains-operated motor			Electronically speed-controlled motor	
															Pump housing							Impeller				Voltage [V]			Voltage [V]	
			TP Series 100	TP Series 200	TP Series 300	BQBE	BAQE	BQQE	DQQE	DAQF	PN 6	PN 10	PN 16	PN 25	Cast iron	EN-GJL-150	Cast iron	EN-GJL-200	Cast iron	EN-GJL-250	Nodular cast iron	EN-GJS-400-18-LT	Bronze [6]	Stainless steel	Stainless steel	Cast iron	Composite	Bronze	1 × 220-230 V	3 × 220-240 ΔV/ 380-415 YV	3 × 380-415 ΔV/ 660-690 YV [7]	1 × 200-240 V	3 × 380-480 V
																											P2 [kW]	P2 [kW]	P2 [kW]	P2 [kW]	P2 [kW]
TP 80-315/2					●		●	●					●						●						●						11		
TP 80-335/2					●		●	●					●						●						●						7.5		
TP 80-385/2					●		●	●					●						●						●						15		
TP 80-395/2					●		●	●					●						●						●						11		
TP 80-405/2					●		●	●					●						●						●						15		
TP 80-425/2					●		●	●					●						●						●						15		
TP 80-435/2					●		●	●					●						●						●						15		
TP 80-455/2					●		●	●					●						●						●						18.5		
TP 80-535/2					●		●	●					●						●						●						22		
TP 80-625/2					●		●	●					●						●						●						30		
TP 80-715/2					●		●	●					●						●						●						30		
TP 80-725/2					●		●	●					●						●						●						37		
TP 80-795/2					●		●	●					●						●						●						37		
TP 100-225/2					●		●	●					●						●						●						11		
TP 100-295/2					●		●	●					●						●						●						15		
TP 100-345/2					●		●	●					●						●						●						18.5		
TP 100-385/2					●		●	●					●						●						●						22		
TP 100-455/2					●		●	●					●						●						●						30		
TP 100-515/2					●		●	●					●						●						●						37		
TP 100-585/2					●		●	●					●						●						●						45		
TP 100-675/2					●		●	●					●						●						●						55		
TP 125-230/2					●		●	●					●						●						●						15		
TP 125-270/2					●		●	●					●						●						●						18.5		
TP 125-350/2					●		●	●					●						●						●						30		
TP 125-475/2					●		●	●					●						●						●						37		
TP 125-535/2					●		●	●					●						●						●						45		
TP 125-605/2					●		●	●					●						●						●						55		
TP 125-745/2					●		●	●					●						●						●						75		

6) Bronze versions are only available as single-head pumps.

7) 2-pole motors above 5.5 kW can be operated at 3 × 660-690 YV. Smaller motor sizes cannot be operated at 3 × 660-690 YV.

Product range, 4-pole, PN 16

● Standard.

Pump type	TPE Series 1000	TPE Series 2000	Design			Shaft seal						Pressure stage				Materials								Mains-operated motor		Electronically speed-controlled motor	
																Pump housing			Impeller					Voltage [V]		Voltage [V]	
			TP Series 100	TP Series 200	TP Series 300	BQBE	BAQE	BQQE	DBUE	DQQE	DAQF	PN 6	PN 10	PN 16	PN 25	Cast iron EN-GJL-250	Nodular cast iron EN-GJS-400-18-LT	Bronze [8]	Stainless steel	Cast iron	Nodular cast iron EN-GJS-400-15	Bronze		3 × 220-240 ΔV/ 380-415 YV	3 × 380-415 ΔV/ 660-690 YV [9]	1 × 200-240 V	3 × 380-480 V
																								P2 [kW]	P2 [kW]	P2 [kW]	P2 [kW]
TP 40-75/4					●		●	●						●		●			●	●				0.37			
TP 40-95/4					●		●	●						●		●			●	●				0.55			
TP 40-105/4					●		●	●						●		●			●	●				0.75			
TP 50-65/4					●		●	●						●		●			●	●				0.55			
TP 50-85/4					●		●	●						●		●			●	●				0.75			
TP 50-95/4					●		●	●						●		●			●	●				1.1			
TP 50-105/4					●		●	●						●		●			●	●				1.1			
TP 50-115/4					●		●	●						●		●			●					1.1			
TP 50-125/4					●		●	●						●		●			●	●				1.5			
TP 50-135/4					●		●	●						●		●			●					1.5			
TP 50-145/4					●		●	●						●		●			●	●				2.2			
TP 50-185/4					●		●	●						●		●			●					2.2			
TP 50-225/4					●		●	●						●		●			●					3			
TP 65-55/4					●		●	●						●		●			●						0.55		
TP 65-75/4					●		●	●						●		●			●						0.75		
TP 65-85/4					●		●	●						●		●			●						1.1		
TP 65-95/4					●		●	●						●		●			●					1.1			
TP 65-105/4					●		●	●						●		●			●						1.5		
TP 65-125/4					●		●	●						●		●			●					1.5			
TP 65-155/4					●		●	●						●		●			●					2.2			
TP 65-165/4					●		●	●						●		●			●	●				3			
TP 65-175/4					●		●	●						●		●			●					3			
TP 65-205/4					●		●	●						●		●			●	●					4		
TP 65-235/4					●		●	●						●		●			●	●					5.5		
TP 80-45/4					●		●	●						●		●			●					0.75			
TP 80-55/4					●		●	●						●		●			●					1.1			
TP 80-56/4					●		●	●						●		●			●						0.75		
TP 80-65/4					●		●	●						●		●			●					0.55			
TP 80-66/4					●		●	●						●		●			●						1.1		
TP 80-75/4					●		●	●						●		●			●					0.75			
TP 80-85/4					●		●	●						●		●			●					1.5			
TP 80-86/4					●		●	●						●		●			●						1.5		
TP 80-95/4					●		●	●						●		●			●					1.1			
TP 80-105/4					●		●	●						●		●			●					2.2			
TP 80-106/4					●		●	●						●		●			●						2.2		
TP 80-115/4					●		●	●						●		●			●					1.5			
TP 80-125/4					●		●	●						●		●			●					2.2			
TP 80-145/4					●		●	●						●		●			●					3			
TP 80-155/4					●		●	●						●		●			●						5.5		
TP 80-185/4					●		●	●						●		●			●						4		
TP 80-195/4					●		●	●						●		●			●						4		
TP 80-225/4					●		●	●						●		●			●						7.5		
TP 80-265/4					●		●	●						●		●			●						5.5		

Pump type	TPE Series 1000	TPE Series 2000	Design			Shaft seal						Pressure stage				Materials								Mains-operated motor		Electronically speed-controlled motor	
																Pump housing			Impeller					Voltage [V]		Voltage [V]	
			TP Series 100	TP Series 200	TP Series 300	BQBE	BAQE	BQQE	DBUE	DQQE	DAQF	PN 6	PN 10	PN 16	PN 25	Cast iron EN-GJL-250	Nodular cast iron EN-GJS-400-18-LT	Bronze [8]	Stainless steel	Cast iron	Nodular cast iron EN-GJS-400-15	Bronze		3 × 220-240 ΔV/ 380-415 YV	3 × 380-415 ΔV/ 660-690 YV [9]	1 × 200-240 V	3 × 380-480 V
																								P2 [kW]	P2 [kW]	P2 [kW]	P2 [kW]
TP 80-275/4					•		•	•						•		•			•						11		
TP 80-285/4					•		•	•						•		•			•						7.5		
TP 100-55/4					•		•	•						•		•			•					1.1			
TP 100-75/4					•		•	•						•		•			•					1.5			
TP 100-85/4					•		•	•						•		•			•					2.2			
TP 100-105/4					•		•	•						•		•			•					3			
TP 100-125/4					•		•	•						•		•			•						4		
TP 100-145/4					•		•	•						•		•			•						5.5		
TP 100-175/4					•		•	•						•		•			•						7.5		
TP 100-225/4					•		•	•						•		•			•	•					11		
TP 100-245/4					•		•	•						•		•			•	•					11		
TP 100-285/4					•		•	•						•		•			•	•					15		
TP 100-335/4					•		•	•						•		•			•	•					15		
TP 100-345/4					•		•	•						•		•			•	•					18.5		
TP 100-355/4					•		•	•						•		•			•	•					18.5		
TP 100-365/4					•		•	•						•		•			•	•					22		
TP 100-375/4					•		•	•						•		•			•	•					22		
TP 125-105/4					•		•	•						•		•			•						4		
TP 125-135/4					•		•	•						•		•			•						5.5		
TP 125-165/4					•		•	•						•		•			•						7.5		
TP 125-185/4					•		•	•						•		•			•						11		
TP 125-195/4					•		•	•						•		•			•						11		
TP 125-225/4					•		•	•						•		•			•						15		
TP 125-295/4					•		•	•						•		•			•						22		
TP 125-355/4					•		•	•						•		•			•						30		
TP 125-375/4					•		•	•						•		•			•						37		
TP 150-135/4					•		•	•						•		•			•						7.5		
TP 150-185/4					•		•	•						•		•			•						11		
TP 150-195/4					•		•	•						•		•			•						11		
TP 150-215/4					•		•	•						•		•			•						15		
TP 150-225/4					•		•	•						•		•			•						18.5		
TP 150-235/4					•		•	•						•		•			•						15		
TP 150-236/4					•		•	•						•		•			•						22		
TP 150-245/4					•		•	•						•		•			•						18.5		
TP 150-255/4					•		•	•						•		•			•						22		
TP 150-285/4					•		•	•						•		•			•						30		
TP 150-286/4					•		•	•						•		•			•						30		
TP 150-326/4					•		•	•						•		•			•						37		
TP 150-365/4					•		•	•						•		•			•						37		
TP 150-366/4					•		•	•						•		•			•						45		
TP 150-405/4					•		•	•						•		•			•						45		
TP 150-406/4					•		•	•						•		•			•						55		
TP 150-455/4					•		•	•						•		•			•						55		
TP 150-495/4					•		•	•						•		•			•						75		
TP 200-175/4					•		•	•						•		•			•						15		
TP 200-205/4					•		•	•						•		•			•						18.5		

Pump type	TPE Series 1000	TPE Series 2000	Design			Shaft seal						Pressure stage				Materials								Mains-operated motor		Electronically speed-controlled motor	
																Pump housing			Impeller					Voltage [V]		Voltage [V]	
			TP Series 100	TP Series 200	TP Series 300	BQBE	BAQE	BQQE	DBUE	DQQE	DAQF	PN 6	PN 10	PN 16	PN 25	Cast iron EN-GJL-250	Nodular cast iron EN-GJS-400-18-LT	Bronze [8]	Stainless steel	Cast iron	Nodular cast iron EN-GJS-400-15	Bronze		3 × 220-240 ΔV/ 380-415 YV	3 × 380-415 ΔV/ 660-690 YV [9]	1 × 200-240 V	3 × 380-480 V
																								P2 [kW]	P2 [kW]	P2 [kW]	P2 [kW]
TP 200-215/4					●		●	●						●		●			●						22		
TP 200-225/4					●		●	●						●		●			●						22		
TP 200-235/4					●		●	●						●		●			●						30		
TP 200-245/4					●		●	●						●		●			●						30		
TP 200-275/4					●		●	●						●		●			●						37		
TP 200-285/4					●		●	●						●		●			●						30		
TP 200-295/4					●		●	●						●		●			●						37		
TP 200-305/4					●		●	●						●		●			●						45		
TP 200-325/4					●		●	●						●		●			●						45		
TP 200-335/4					●		●	●						●		●			●						37		
TP 200-365/4					●		●	●						●		●			●						55		
TP 200-385/4					●		●	●						●		●			●						45		
TP 200-445/4					●		●	●						●		●			●						75		
TP 200-455/4					●		●	●						●		●			●						90		
TP 200-495/4					●		●	●						●		●			●						90		
TP 200-515/4					●		●	●						●		●			●						110		
TP 200-585/4					●		●	●						●		●			●						132		
TP 200-655/4					●		●	●						●		●			●						160		

8) Bronze versions are only available as single-head pumps.

9) 2-pole motors above 5.5 kW can be operated at 3 × 660-690 YV. Smaller motor sizes cannot be operated at 3 × 660-690 YV.

4. Operating conditions

System and test pressures

Pressure	System pressure		Test pressure	
	[bar]	[MPa]	[bar]	[MPa]
PN 16	16	1.6	24	2.4

Sound pressure level

Single-phase: Maximum 70 dB(A).

Three-phase: See table below.

Motor [kW]	Maximum sound pressure level [dB(A)] - ISO 3743	
	Three-phase motors-IE3	
	2-pole	4-pole
2.2	67	-
3.0	65	-
4.0	65	-
5.5	-	62
7.5	-	62
11.0	69	69
15.0	69	69
18.5	-	65
22.0	-	65
30.0	-	71
37.0	-	70
45.0	-	70
55.0	-	-
75.0	-	-
90.0	-	-
110.0	-	75
132.0	-	75

Motor [kW]	Maximum sound pressure level [dB(A)] - ISO 3743	
	Three-phase motors-IE4	
	2-pole	4-pole
0.75	62	56
1.1	62	59
1.5	67	59
2.2	67	64
3.0	74	64
4.0	77	65
5.5	79	71
7.5	79	71
11.0	69	60
15.0	69	60
18.5	60	65
22.0	70	65
30.0	76	68
37.0	76	70
45.0	76	70
55.0	77	67
75.0	79	71
90.0	-	71
110.0	-	81
132.0	-	81
160.0	-	81
200.0	-	81

The values apply only to MMG motors.

The values have a tolerance of 3 dB according to EN ISO 4871. The tolerance is not added to the values in the table.

Ambient temperature

Innomotics IE3 motors: 30-55 kW motors, 2-pole 0.55 - 55 kW motors, 4-pole Innomotics IE4 motors	-20 to +55 °C
Other motor sizes:	-20 to +40 °C
Storage	Down to -30 °C

Installation altitude

Pump with standard motor

If the ambient temperature exceeds maximum values or if the motor is located more than 1000 m above sea level, the motor output, P2, must be reduced due to the low density and consequent low cooling effect of the air. In such cases, it may be necessary to use an oversize motor with a higher rated output.

Pos.	Description
3	Innomotics IE3 motors: 30-55 kW motors, 2-pole 0.55 - 55 kW motors, 4-pole Innomotics IE4 motors
2	MG IE3 motors: 0.75 - 22 kW motors, 2-pole
1	Other motor sizes

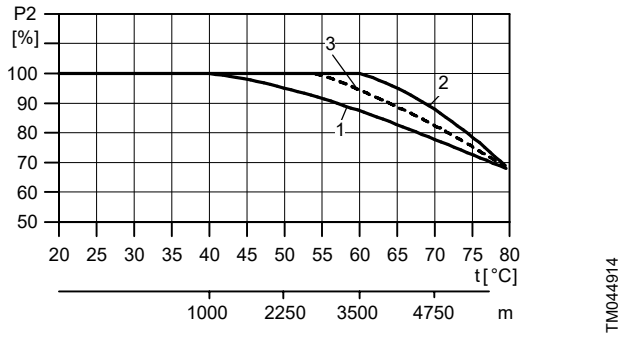

Maximum motor output in relation to ambient temperature and altitude

Low air pressure

At low air pressure, the cooling capability of air is reduced.

At altitudes above 1000 m (3280 ft), the maximum output current should be derated in accordance with the diagram in the figure below.

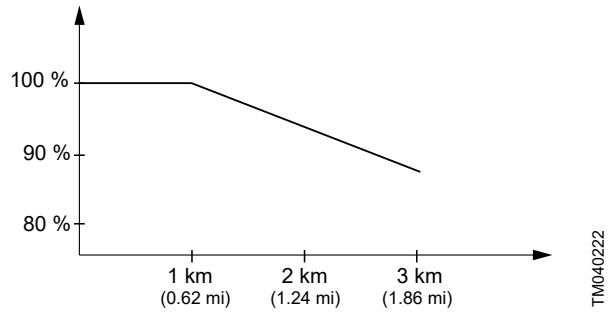

Derating of output current at low air pressure

At altitudes above 2000 m (6561 ft), the PELV requirements cannot be met.

PELV = Protective Extra Low Voltage.

An alternative is to lower the ambient temperature at high altitudes and thereby ensure 100 % output current at high altitudes.

5. Pumped liquids

Pumped liquids

The pump is suitable for thin, clean, non-aggressive and non-flammable liquids, not containing solid particles or fibres that may attack the pump mechanically or chemically. See section List of pumped liquids.

Examples

- Central heating system water. The water must meet the requirements of accepted standards on water quality in heating systems.
- cooling liquids
- hot tap water
- industrial liquids
- softened water.

If glycol or another antifreeze agent is added to the pumped liquid, the pump must have a shaft seal of the BQQE or DQQE type. See section Recommended shaft seal for water-glycol mixture.

The pumping of liquids with density and/or kinematic viscosity higher than that of water will have the following effects:

- a considerable pressure drop
- a drop in hydraulic performance
- a rise in power consumption.

In such cases, fit the pump with a bigger motor. If in doubt, contact Grundfos.

If the water contains mineral or synthetic oils or chemicals or if other liquids than water are pumped, chose the O-rings accordingly.

Liquid temperature

Liquid temperature: -40 to +150 °C.

Please note that shaft seals operating close to their maximum temperature will require regular maintenance or replacement.

Pump type	Shaft seal	Temperature
TP Series 300, 16-bar version	BAQE	0 to +120 °C (140 °C) [10]
	BQQE	-25 to +120 °C

[10] TP Series 300, PN 16 pumps are designed for a maximum operating temperature of 140 °C. For operation above 120 °C, select an alternative shaft seal. Contact Grundfos.

Depending on the type of cast-iron version and the pump application, the maximum liquid temperature may be limited by local regulations and laws.

List of pumped liquids

TP pumps are designed for circulation systems with constant flow rate.

Thanks to their design, you can use the pumps in a wider liquid temperature range than pumps of the canned rotor type.

A number of typical liquids are listed below.

You can use other pump versions, but we consider the ones stated in the list to be the best choices.

The list is intended as a general guide only, and it cannot replace actual testing of the pumped liquids and pump materials under specific working conditions. If in doubt, we recommend that you fill in the form shown on section Key application data and contact Grundfos.

Use the list with some caution, as factors such as concentration of the pumped liquid, liquid temperature or pressure may affect the chemical resistance of a specific pump version.

A	May contain additives or impurities that may cause shaft seal problems.
B	The density and/or viscosity differ from those of water. Consider this when calculating motor and pump performance.
C	The liquid must be oxygen-free (anaerobic).
D	Risk of crystallisation or precipitation in the shaft seal.
E	Insoluble in water.
F	The shaft seal rubber parts must be replaced with FKM rubber.
G	Bronze housing or impeller required.

Pumped liquids	Notes	Additional information	Shaft seal TP Series 300 PN 16
Water			
Groundwater		< 120 °C	BQQE
		> 120 °C	DAQF [11) 12)]
Boiler-feed water		< 120 °C	BAQE [13)] BQQE
		< 140 °C	DAQF [11)]
District-heating water		< 120 °C	BAQE BQQE
Condensate		< 120 °C	BAQE BQQE
		> 120 °C	DAQF [11)]
Softened water	C	< 120 °C	BQQE BAQE
		> 120 °C	DAQF [11)]
Brackish water	G	pH > 6.5, 40 °C, 1000 ppm Cl^-	BQQE
Coolants			
Ethylene glycol	B, D, H	< 120 °C	BQQE
		< 90 °C	
	C	< 140 °C	DQQE
Glycerine (glycerol)	B, D, H	< 120 °C	BQQE
		< 90 °C	
	C	< 140 °C	DQQE
Potassium acetate	B, D, C, H	< 120 °C	BQQE
		< 110 °C	
		< 90 °C	
	C	< 140 °C	DQQE
Potassium formate	B, D, C, H	< 120 °C	BQQE
		< 90 °C	
	C	< 140 °C	DQQE
Propylene glycol	B, D, H	< 120 °C	BQQE
		< 90 °C	
	C	< 140 °C	DQQE
Brine sodium chloride	B, D, C, H	< 5 °C, 30 %	BQQE

Pumped liquids	Notes	Additional information	Shaft seal TP Series 300 PN 16
Synthetic oils			
Silicone oil	B, E		BAQE BQQE
Vegetable oils			
Corn oil	B, F, E		BBQV [11)] BQQV [11)]
Olive oil	B, F, E	< 80 °C	BBQV [11)] BQQV [11)]
Peanut oil	B, F, E		BBQV [11)] BQQV [11)]
Rapeseed oil	D, B, F, E		BBQV [11)] BQQV [11)]
Soybean oil	B, F, E		BBQV [11)] BQQV [11)]
Cleaning agents			
Soap (salts of fatty acids)	A, E, (F)	< 80 °C	BQQE (BQQV) [11)]
Alkaline degreasing agent	A, E, (F)	< 80 °C	BQQE (BQQV) [11)]
Oxidants			
Hydrogen peroxide		< 40 °C, < 2 %	BQQE
Salts			
Ammonium bicarbonate	A	< 20 °C, < 15 %	BQQE
Calcium acetate	A, B	< 20 °C, < 30 %	BQQE
Potassium bicarbonate	A	< 20 °C, < 20 %	BQQE
Potassium carbonate	A	< 20 °C, < 20 %	BQQE
Potassium permanganate	A	< 20 °C, < 10 %	BQQE
Potassium sulphate	A	< 20 °C, < 20 %	BQQE
Sodium acetate	A	< 20 °C, < 100 %	BQQE
Sodium bicarbonate	A	< 20 °C, < 2 %	BQQE
Sodium carbonate	A	< 20 °C, < 20 %	BQQE
Sodium nitrate	A	< 0 °C, < 40 %	BQQE
Sodium nitrite	A	< 20 °C, < 40 %	BQQE
Sodium phosphate (di)	A	< 100 °C, < 30 %	BQQE
Sodium phosphate (tri)	A	< 90 °C, < 20 %	BQQE
Sodium sulphate	A	< 20 °C, < 20 %	BQQE
Sodium sulphite	A	< 20 °C, < 1 %	BQQE
Alkalis			
Ammonium hydroxide		< 100 °C, < 30 %	BQQE
Calcium hydroxide	A	< 100 °C, < 10 %	BQQE
Potassium hydroxide	A	< 20 °C, < 20 %	BQQE
Sodium hydroxide	A	< 40 °C, < 20 %	BQQE

11) The shaft seal is not standard, but available on request.

12) Do not use for potable water.

13) Do not use BAQE for potable water. For potable water, we recommend that you use a BBQE shaft seal.

Recommended shaft seal for water-glycol mixture

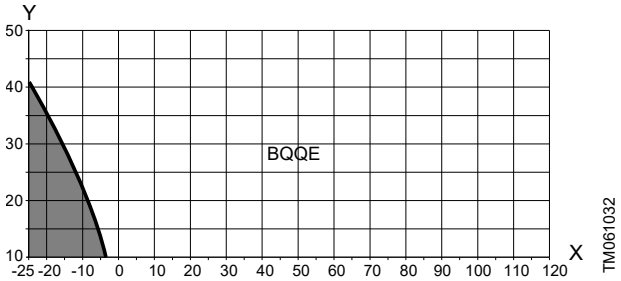

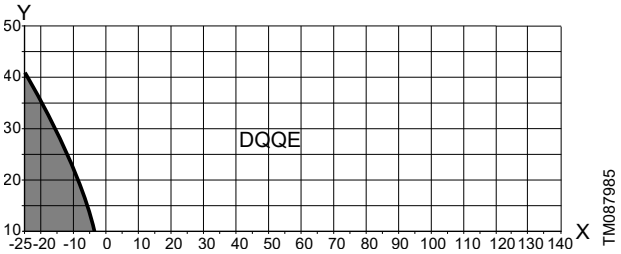

Operating range of EPDM shaft seals

Pos.	Description
X	Temperature [°C]
Y	Glycol content [%]

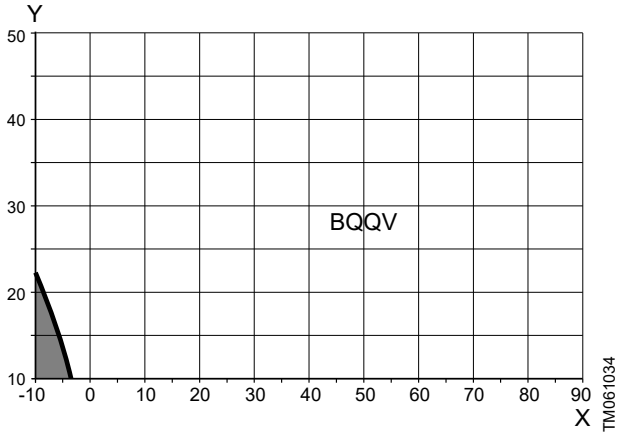

Operating range of FKM shaft seals

Pos.	Description
X	Temperature [°C]
Y	Glycol content [%]

6. TP Series 300 pumps

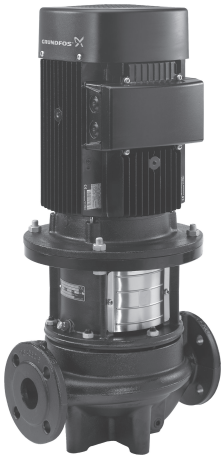

TP Series 300

Related information

TP, mains-operated pumps

Technical data

	PN 16 version
Flow rate [m^3/h]	Up to 913
Head [m]	Up to 100
Liquid temperature [°C]	-25 to +140
Maximum operating pressure [bar]	16
Direction of rotation	Clockwise

Construction

Grundfos TP Series 300 pumps are single-stage, close-coupled pumps with in-line inlet and outlet ports of identical diameter.

The pumps are fitted with a fan-cooled asynchronous motor. Motor and pump shafts are connected via a rigid sleeve coupling.

TP Series 300 pumps have PN 16 flanges.

The pumps are fitted with an unbalanced or a balanced mechanical shaft seal.

The pumps are of the top-pull-out design, that is you can remove the power head (motor, pump head and/or motor stool and impeller) for maintenance or service while the pump housing remains in the pipes.

The pump housing is provided with a replaceable wear ring to ensure high pump efficiency for life.

The twin-head pumps are designed with two parallel power heads. A non-return flap valve in the common outlet port is opened by the flow of the pumped liquid and prevents backflow of liquid into the idle pump head.

As radial and axial forces are absorbed by the fixed bearing in the motor drive-end, the pump requires no bearing.

The impeller is hydraulically balanced to minimise axial forces.

TP Series 300 pumps are fitted with high-efficiency motors.

Materials

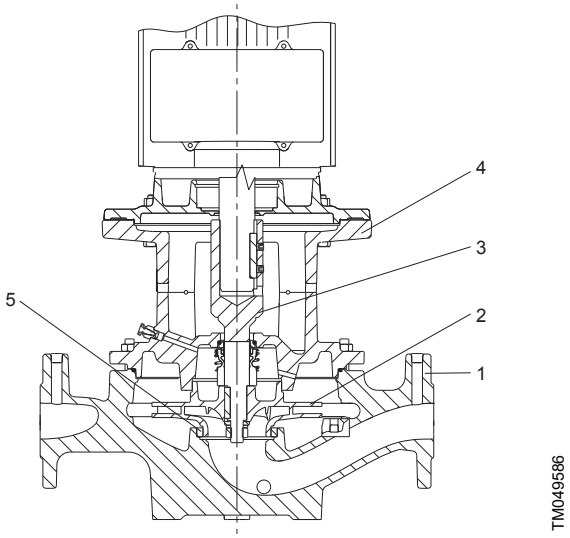

Sectional drawing of TP Series 300

Material specification
TP Series 300, PN 16

Pos.	Component	Material	EN/DIN
1	Pump housing	Cast iron EN-GJL-250	EN-JL 1040
2	Impeller	Cast iron EN-GJL-200 Stainless steel Stainless steel	EN-JL 1030 1.4308 1.4408
3	Stub shaft Two-part stub shaft	Stainless steel Stainless steel / steel	1.4301 1.4301 / 1.0301
4	Pump head / motor stool	Cast iron EN-GJL-250	EN-JL 1040
	Secondary seals	EPDM	
	Rotating seal face	Metal-impregnated carbon Silicon carbide	
	Stationary seat	Silicon carbide	
5	Wear ring	Brass CuZn34Mn3Al2Fe1-C	CC7645

Mechanical shaft seal

For 16-bar versions, the following types of unbalanced mechanical shaft seals are available as standard:

- **BAQE**
  The BAQE shaft seal is a rubber bellows seal with carbon/silicon carbide seal faces and secondary seals of EPDM.
- **BQQE**
  The BQQE shaft seal is a rubber bellows seal with silicon carbide/silicon carbide seal faces and secondary seals of EPDM.

For further information about common pumped liquids with recommended shaft seals, see section List of pumped liquids.

Special shaft seals are available for partly conditioned water or other liquids containing abrasive or crystallising particles. See section List of pumped liquids.

Connections

TP Series 300 pumps have PN 16. All dimensions are according to ISO 7005-2 or EN 1092-2.

Features and benefits

TP Series 300 pumps have these features and benefits:

Optimised hydraulics for high efficiency

- Reduced power consumption.

High-efficiency motors

- TP pumps are fitted with high-efficiency motors. High-efficiency motors offer reduced energy consumption. TP pumps are primarily fitted with motors that meet the legislative requirements of the EuP IE3 or IE4 grade. For further information, see section Motors.

Top-pull-out design

- Easy dismantling in case of service.

In-line design

- Contrary to end-suction pumps, in-line pumps allow straight pipes and thus often reduced installation costs.

Motor-pump shaft with sleeve coupling

- Stable and quiet operation.
- Easy dismantling in case of service.

Hydraulically and mechanically balanced impeller

- The impeller is hydraulically and mechanically balanced to increase the life of motor bearings and shaft seal.

Surface treatment

TP series 300 pumps are given the following surface treatment

Pump type	Electrocoating	Spray painting
TP Series 300 from DN 32 to DN 350	x	

Electrocoating includes:

1. Alkaline cleaning.
2. Pretreatment with zinc phosphate coating.
3. Cathodic electrocoating, epoxy.
4. Curing of paint film at 200-250 °C.

For low-temperature applications at a high humidity, Grundfos offers TP pumps with extra surface treatment to avoid corrosion. These pumps are available on request.

7. Motor data

Motors

Motors fitted on TP pumps are totally enclosed, fan-cooled motors with main dimensions to IEC and DIN standards. Electrical tolerances to IEC 34.

Mounting designation

Pump type	Mounting designation - IEC 34-7
TP Series 300	IM 3001 (IM B 5) / IM 3011 (IM V 1)

Relative humidity:	Maximum 95 %
Enclosure class:	IP55
Insulation class:	F (IEC 85)
Ambient temperature:	Maximum 55 °C, Innomotics motors Maximum 60 °C, MG motors Maximum 40 °C, minimum -20 °C, other motors

If the pump is installed in humid locations, open the lowest drain hole in the motor. This reduces the motor enclosure class to IP44.

High-efficiency motors

TP pumps are fitted with high-efficiency motors.

TP pumps are available with IE4 motors as standard. IE3 or IE5 motor is an option.

Motor range

kW	Mains-operated motors		
	2-pole	4-pole	6-pole
0.12			
0.18			
0.25			
0.37		MMG	
0.55			
0.75			
1.1	MMG		
1.5			
2.2			
3.0			
4.0			
5.5			
7.5			
11.0			
15.0			
18.5			
22.0			
30.0			
37.0			
45.0			
55.0			
75.0			
90.0			
110			
132			
160			
200			
250			
315			
355			
400			
500			
560			
630			

MMG is Grundfos motor brand.

The grey-shaded areas indicate non-available motors.

8. Installation

Mechanical installation

You can install TP pumps with motors smaller than 11 kW in horizontal or vertical pipes.

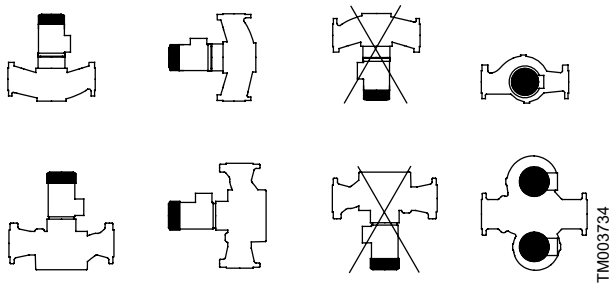

Installation of motor sizes smaller than 11 kW

You can suspend pumps with motors smaller than 11 kW directly in the pipes, provided the pipes can support the pump. If not, install the pump on a mounting bracket or base plate.

Only install TP pumps with motors of 11 kW and up in horizontal pipes with the motor in vertical position. Always install the pump on an even and rigid foundation.

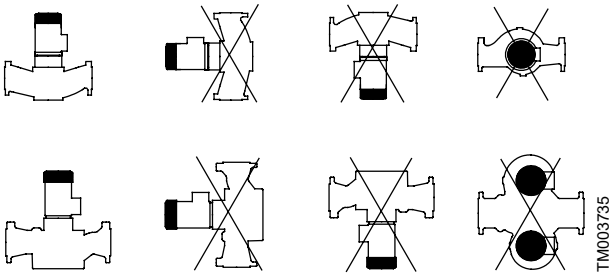

Installation of motor sizes of 11 kW and up

Note: The motor must never point downwards.

Install the pumps in such a way that strain from the pipes is not transferred to the pump housing.

However, you can suspend some TP pumps of 11 kW and up directly in the pipes, either horizontally or vertically. See the table below.

TP pumps from 11 kW and up suspended in the pipes

Pump type	PN 16	PN 25	P2 [kW]		
50 Hz					
TP 65-415/2	●	-	11	-	●
TP 65-435/2	●	-	15	-	●
TP 65-445/2	●	-	11	-	●
TP 65-535/2	●	-	15	-	●
TP 65-615/2	●	-	18.5	-	●
TP 65-635/2	●	-	22	-	●
TP 65-675/2	●	-	22	-	●
TP 80-275/4	●	-	11	-	●
TP 80-305/2	●	-	11	-	●
TP 80-315/2	●	-	11	-	●
TP 80-385/2	●	-	15	-	●
TP 80-395/2	●	-	11	-	●
TP 80-405/2	●	-	15	-	●
TP 80-425/2	●	-	15	-	●
TP 80-435/2	●	-	18.5	-	●
TP 80-455/2	●	-	18.5	-	●
TP 80-535/2	●	-	22	-	●
TP 100-225/2	●	-	11	-	●
TP 100-225/4	●	-	11	-	●
TP 100-245/4	●	-	11	-	●
TP 100-285/4	●	-	15	-	●
TP 100-295/2	●	-	15	-	●
TP 100-335/4	●	-	15	-	●
TP 100-345/2	●	-	18.5	-	●
TP 100-345/4	●	-	18.5	-	●
TP 100-355/4	●	-	18.5	-	●
TP 100-365/4	●	-	22	-	●
TP 100-375/4	●	-	22	-	●
TP 100-385/2	●	-	22	-	●
TP 125-185/4	●	-	11	●	-
TP 125-195/4	●	-	11	-	●
TP 125-225/4	●	-	15	-	●
TP 125-230/4	●	-	15	●	-
TP 125-270/4	●	-	18.5	●	-
TP 125-295/4	●	-	22	-	●
TP 125-350/4	●	-	30	●	-
TP 125-475/2	●	-	37	●	-
TP 125-535/2	●	-	45	●	-
TP 125-605/2	●	-	55	●	-
TP 125-745/2	●	-	75	●	-
TP 150-185/4	●	-	11	●	-
TP 150-195/4	●	-	11	●	-
TP 150-215/4	●	-	15	●	-
TP 150-225/4	●	-	18.5	●	-
TP 150-235/4	●	-	15	●	-
TP 150-236/4	●	-	22	●	-
TP 150-245/4	●	-	18.5	●	-
TP 150-255/4	●	-	22	●	-
TP 150-285/4	●	-	30	●	-
TP 150-286/4	●	-	30	●	-

Pump type	PN 16	PN 25	P2 [kW]		
TP 150-326/4	●	-	37	●	-
TP 150-365/4	●	-	37	●	-
TP 150-366/4	●	-	45	●	-
TP 150-405/4	●	-	45	●	-
TP 150-406/4	●	-	55	●	-
TP 150-455/4	●	-	55	●	-
TP 150-495/4	●	-	75	●	-
TP 200-175/4	●	-	15	●	-
TP 200-205/4	●	-	18.5	●	-
TP 200-215/4	●	-	22	●	-
TP 200-225/4	●	-	22	●	-
TP 200-235/4	●	-	30	●	-
TP 200-245/4	●	-	30	●	-
TP 200-275/4	●	-	37	●	-
TP 200-285/4	●	-	30	●	-
TP 200-295/4	●	-	37	●	-
TP 200-305/4	●	-	45	●	-
TP 200-325/4	●	-	45	●	-
TP 200-335/4	●	-	37	●	-
TP 200-365/4	●	-	55	●	-
TP 200-385/4	●	-	45	●	-
TP 200-445/4	●	-	75	●	-
TP 200-455/4	●	-	90	●	-
TP 200-495/4	●	-	90	●	-
TP 200-515/4	●	-	110	●	-
TP 200-585/4	●	-	132	●	-
TP 200-655/4	●	-	160	●	-

In installations where the pump is suspended directly in the pipes, the pump can support the pipe length L on both sides of the pump. L is less than 3 × DN. In installations where the pump is suspended directly in the pipes, the pump must be lifted and held in correct position by means of ropes or similar until both pump flanges are completely fastened to the pipe flanges.

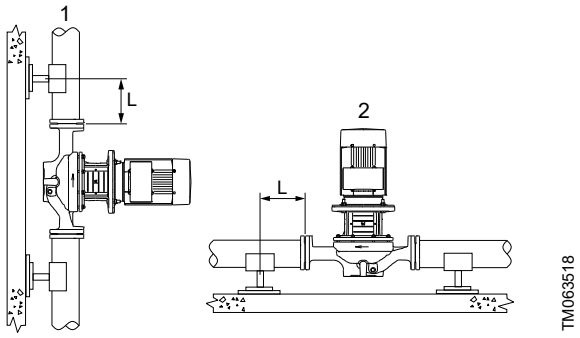

Pump suspended directly in the pipes

Pos.	Description
1	Vertical pipe
2	Horizontal pipe

If the liquid temperature falls below the ambient temperature or if the pump is installed outside, condensation may form in the motor during inactivity. In this case, the drain hole in the motor flange must be open and point downwards.

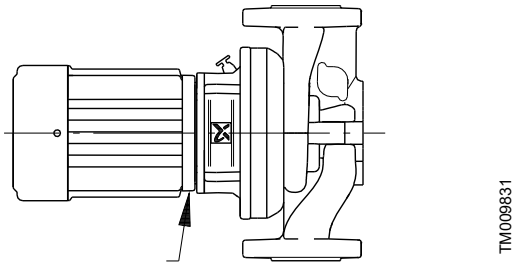

Drain hole

Cooling

To ensure sufficient cooling of motor and electronics, observe the following:

- Place the pump in such a way that sufficient cooling is ensured.
- Keep the motor cooling fins, holes in fan cover and fan blades clean.
- Make sure that the frequency for the motor is at least 6 Hz, 12 % of maximum speed. The shaft seal may generate noise at speeds below 25 % of maximum speed.

Condensation cover

When installing the pumps outdoors, provide the motor with a suitable cover to protect the pump and motor against the direct effects of the elements. The drain holes in the motor must also be opened to avoid condensation in the motor and terminal box.

When mounting the condensation cover on top of the motor, make sure to leave enough space for the air to cool the motor.

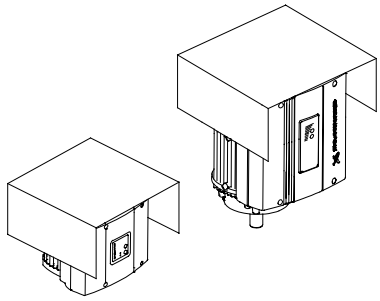

TM028514

Motors with condensation cover

Elimination of noise and vibrations

In order to achieve optimum operation and minimum noise and vibration, consider vibration dampening of the pump. Generally, always consider this for pumps with motors of 11 kW and up, but for motors of 90 kW and up as well as the pump stated in the table below, vibration dampening is mandatory. Smaller motor sizes, however, may also cause undesirable noise and vibration.

Pump type	Frequency [Hz]
TP 200-290/4	50 Hz

Noise and vibration are generated by the revolutions of the motor and pump and by the flow in pipes and fittings. The effect on the environment is subjective and depends on correct installation and the state of the remaining system.

Elimination of noise and vibrations is best achieved by means of a concrete foundation, vibration dampers and expansion joints.

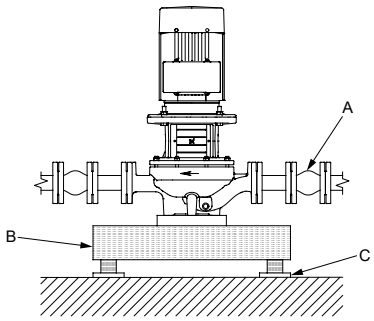

TM024993

Foundation of TP pump

Pos.	Description
A	Expansion joint
B	Concrete foundation
C	Vibration dampers

Concrete foundation

Install the pump on a plane and rigid concrete foundation. This is the optimum solution for vibration dampening. As a rule of thumb, the weight of a concrete foundation must be 1.5 times the pump weight.

Recommended concrete foundations for TP Series 300 pumps

For TP Series 300 pumps with weights of 150 kg or more, we recommend that you mount the pump on a concrete foundation with the dimensions stated in the table below.

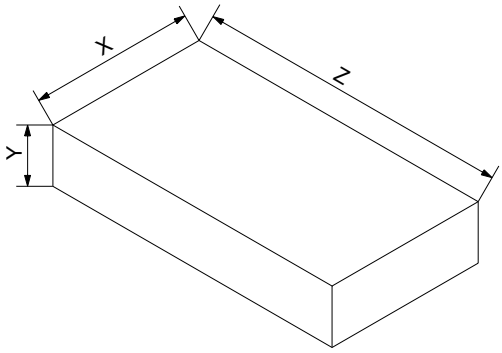

TM039190

Foundation for TP Series 300 pumps

Concrete foundation dimensions				
Pump mass [kg]		Y (height) [mm]	Z (length) [mm]	X (width) [mm]
150		280	565	565
200		310	620	620
250		330	670	670
300		360	710	710
350		375	750	750
400		390	780	780
450		410	810	810
500		420	840	840
550		440	870	870
600		450	900	900
650		460	920	920
700		470	940	940
750		480	970	970
800		490	990	990
850	≤ DN 200	500	1010	1010
900		510	1030	1030
950		520	1050	1050
1000		530	1060	1060
1050		540	1080	1080
1100		550	1100	1100
1150		560	1100	1100
1200		560	1130	1130
1250		570	1150	1150
1300		580	1160	1160
1350		590	1180	1180
1400		600	1190	1190
1450		600	1200	1200
1500		610	1220	1220
1550		620	1230	1230

Concrete foundation dimensions			
Pump mass [kg]	Y (height) [mm]	Z (length) [mm]	X (width) [mm]
1600	620	1250	1250
1650	630	1250	1250
1700	635	1270	1270

Vibration dampers

To prevent the transmission of vibrations to buildings, we recommend that you isolate the pump foundation from building parts by means of vibration dampers.

The selection of the right vibration damper requires the following data:

- Forces transmitted through the damper.
- Motor speed considering speed control, if any.
- Required dampening in %. The suggested value is 70 %.

The right damper varies from installation to installation, and a wrong damper may increase the vibration level. Vibration dampers must therefore be sized by the supplier.

If you install the pump on a foundation with vibration dampers, always fit expansion joints on the pump flanges. This is important to prevent the pump from "hanging" in the flanges.

Expansion joints

Expansion joints do the following:

- absorb expansions or contractions in the pipes caused by changing liquid temperature.
- reduce mechanical strains in connection with pressure surges in the pipes.
- isolate mechanical structure-borne noise in the pipes. Only rubber bellows expansion joints.

Note: Do not install expansion joints to compensate for inaccuracies in the pipes such as centre displacement of flanges.

Fit expansion joints at a distance of minimum 1 to 1.5 times the nominal flange diameter away from the pump on the inlet as well as on the outlet side. This prevents the development of turbulence in the expansion joints, resulting in better suction conditions and a minimum pressure loss on the outlet side. At high water velocities, greater than 5 m/s, we recommend that you install larger expansion joints corresponding to the pipes. See the figure below.

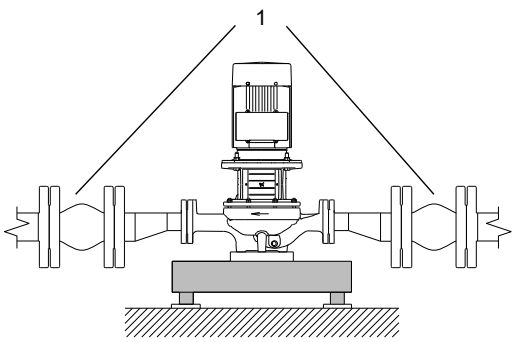

TM049629

TP pump installed with larger expansion joints

Pos.	Description
1	Expansion joints

The illustration below shows examples of rubber bellows expansion joints with or without limit rods.

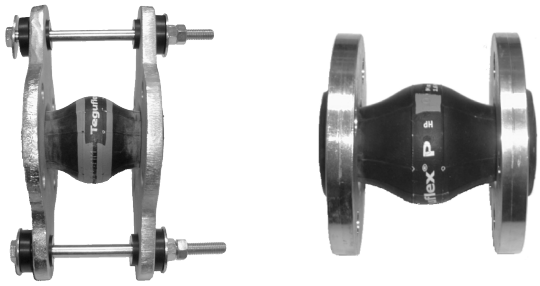

Examples of rubber bellows expansion joints

You can use expansion joints with limit rods to reduce the effects of the expansion or contraction forces on the pipes. We always recommend expansion joints with limit rods for flanges larger than DN 100.

Anchor the pipes in such a way that they do not stress the expansion joints and the pump. Follow the supplier's instructions and pass them on to advisers or pipe installers.

The illustration below shows an example of a metal bellows expansion joint with limit rods.

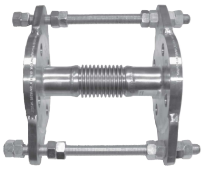

TM024980

Example of metal expansion joint

Due to the risk of rupture of the rubber bellows, metal bellows expansion joints may be preferred at temperatures above 100 °C combined with high pressure.

Terminal box positions

TP single-head pumps

As standard, the terminal boxes of TP pumps are mounted in 9 o'clock position.

The possible terminal box positions are shown below.

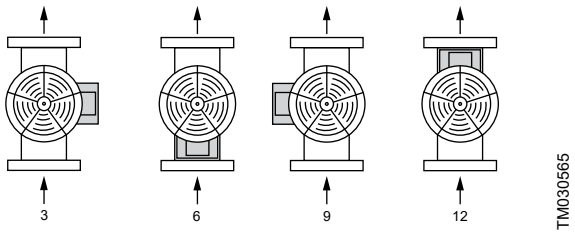

Possible terminal box positions

Pos.	Description
3	3 o'clock
6	6 o'clock
9	9 o'clock Standard
12	12 o'clock

Electrical installation

Mains-operated motors

The operating voltage and frequency are marked on the pump nameplate. Make sure that the motor is suitable for the power supply on which it will be used.

Single-phase standard motors incorporate a thermal switch and require no additional motor protection.

Three-phase motors must be connected to a motor starter.

Motors of 3 kW and up incorporate thermistors, PTC. The thermistors are designed according to DIN 44082.

The electrical connection must be carried out as shown in the diagram inside the terminal box cover.

The motors of twin-head pumps are to be connected separately.

Frequency converter operation

Motors types Innomotics, MG 71 and MG 80 for supply voltages up to and including 440 V must be protected against voltage peaks higher than 650 V between the supply terminals. See the motor nameplate.

Grundfos motors:

You can connect all three-phase Grundfos motors from frame size 90 and up to a frequency converter.

The connection of a frequency converter often has the effect that the motor insulation system is loaded more and that the motor is noisier than during normal operation. In addition, large motors are loaded by bearing currents caused by the frequency converter.

In the case of frequency converter operation, consider the following:

In 2-pole motors from 45 kW, 4-pole motors from 37 kW and 6-pole motors from 30 kW, one of the motor bearings must be electrically isolated to prevent damaging currents from passing through the motor bearings.

In the case of noise-critical applications, reduce the motor noise by fitting a dU/dt filter between the motor and the frequency converter. In particularly noise-critical applications, we recommend that you fit a sinusoidal filter.

The length of the cable between the motor and frequency converter affects the motor load. Therefore, check that the cable length meets the specifications laid down by the frequency converter supplier.

For supply voltages between 500 and 690 V, fit either a dU/dt filter to reduce voltage peaks or use a motor with reinforced insulation.

For supply voltages of 690 V, use a motor with reinforced insulation, and fit a dU/dt filter.

For other motor makes than Grundfos, contact Grundfos or the motor manufacturer.

9. Flange forces

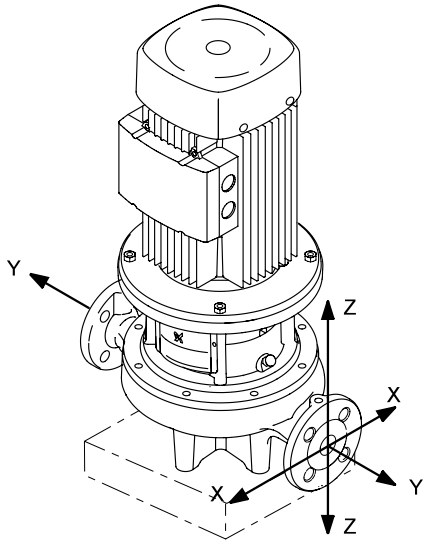

Flange forces

PN 16

Diameter	Force [N]				Moment [Nm]			
	Fy	Fz	Fx [14)]	ΣF	My	Mz	Mx	ΣM [14)]
25	425	350	375	650	300	350	450	650
32	525	425	450	825	375	425	550	800
40	625	500	550	975	450	525	650	950
50	825	675	750	1300	500	575	700	1025
65	1050	850	925	1650	550	600	750	1100
80	1250	1025	1125	1969	575	650	800	1175
100	1675	1350	1500	2625	625	725	875	1300
125	1975	1600	1775	3100	750	950	1050	1525
150	2500	2025	2250	3925	875	1025	1250	1825
200	3350	2700	3000	5225	1150	1325	1625	2400

[14)] ΣF and ΣM are the vector sums of the forces and moments.

Values are based on EN ISO 5199:2002.

10. Flanges for TP pumps

Flange dimensions

PN 16 flanges

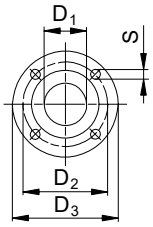

TM027720

	EN 1092-2 PN 16 (1.6 MPa)								
	Nominal diameter (DN)								
	32	**40**	**50**	**65**	**80**	**100**	**125**	**150**	**200**
D_1	32	40	50	65	80	100	125	150	200
D_2	100	110	125	145	160	180	210	240	295
D_3	140	150	165	185	200	220	250	285	340
S	4 × 19	4 × 19	4 × 19	4 × 19	8 × 19	8 × 19	8 × 19	8 × 23	12 × 23

11. Curve charts

How to read the curve charts

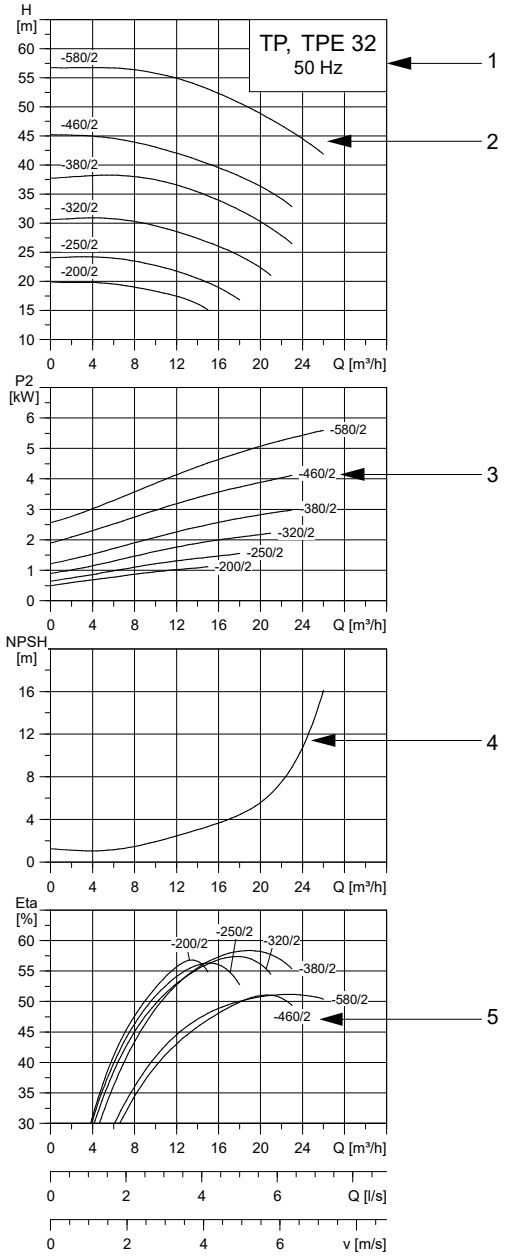

TM081721

Pos.	Description
1	Pump type and frequency.
2	QH curve for the individual single-head pump. The bold curve indicates the recommended performance range.
3	The power curve indicates the pump input power [P2].
4	The NPSH (3 %) curve shows the maximum net positive suction head, NPSH, required to ensure that the pump head is not reduced by more than 3 %. The available system pressure at the pump inlet must be according to the NPSH (3 %) curve.
5	The eta curve shows the pump efficiency.

Curve conditions

The guidelines below apply to the curves shown on the following pages:

- Tolerances to ISO 9906:2012 Grade 3B.
- The curves apply to the performance of **single-head three-phase pumps**. For other pump versions, please see the exact curves in Grundfos Product Center. See section Grundfos Product Center. For other pump versions, the performance may differ for the following reasons:
  - Single-phase motors run at lower speed.
- QH curves of the individual single-head pumps are shown with expected speed of a three-phase mains-operated motor. For further information, see the tables of technical data on the following pages.

  The performance of the single-phase motor is slightly reduced. Please refer to Grundfos Product Center for the exact single-phase curves. See section Grundfos Product Center.
- Measurements have been made with airless water at a temperature of 20 °C.
- The curves apply to a kinematic viscosity of υ equal to 1 mm^2/s (1 cSt).
- Due to the risk of overheating, the pump must not run constantly below the minimum flow rate indicated by the bold curves.
- If the pumped liquid density and/or viscosity are higher than those of water, it may be necessary to use a motor with a higher performance.

Related information

Performance range, 2-pole, PN 16

Performance range, 4-pole, PN 16

12. Performance curves and technical data

TP, 2-pole, PN 16

TP 40-XX/2

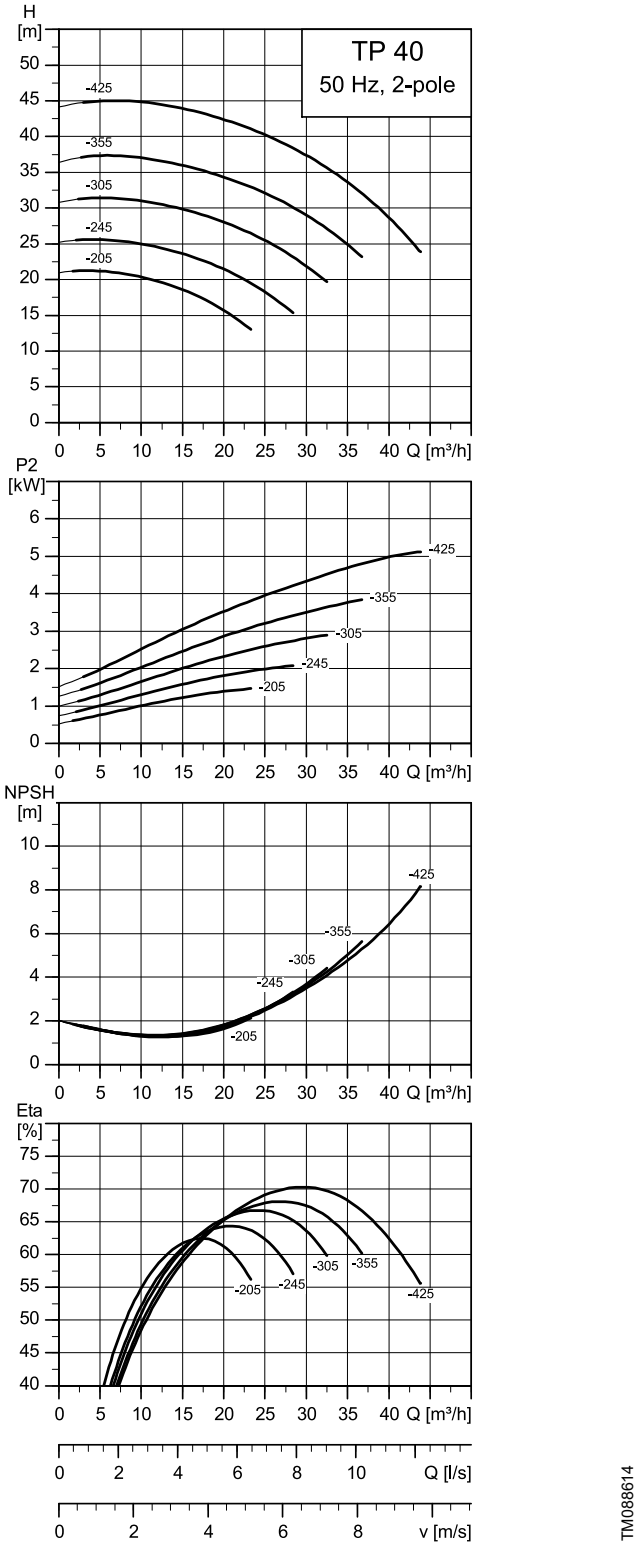

Note: All curves apply to single-head pumps. For further information, see section Curve conditions.

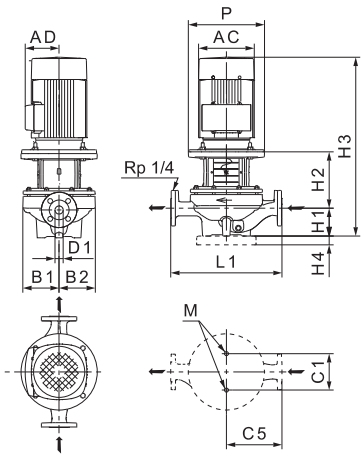

TM028632

TP 40			-205/2	-245/2	-305/2	-355/2	-425/2
Series			300	300	300	300	300
IEC size	1~ TP		-	-	-	-	-
	3~ TP		90	90	100	112	132
P2	1~/3~ TP	[kW]	-/1.5	-/2.2	-/3	-/4	-/5.5
PN			PN 16	PN 16	PN 16	PN 16	PN 16
T_{min};T_{max}		[°C]	[-25;120]	[-25;120]	[-25;120]	[-25;120]	[-25;120]
D1		[mm]	40	40	40	40	40
AC	1~/3~ TP	[mm]	-/175	-/175	-/199	-/222	-/260
AD	1~/3~ TP	[mm]	-/143	-/143	-/159	-/169	-/193
P		[mm]	140	140	250	250	300
B1		[mm]	135	135	135	135	135
B2		[mm]	121	121	121	121	121
C1		[mm]	144	144	144	144	144
C5		[mm]	220	220	220	220	220
L1		[mm]	440	440	440	440	440
H1		[mm]	115	115	115	115	115
H2		[mm]	172.5	172.5	192.5	192.5	212.5
H3	1~/3~ TP	[mm]	561.5	586.5	620.5	627.5	722.5
H4		[mm]	-	-	-	-	-
M			M16	M16	M16	M16	M16

TP 50-XX/2

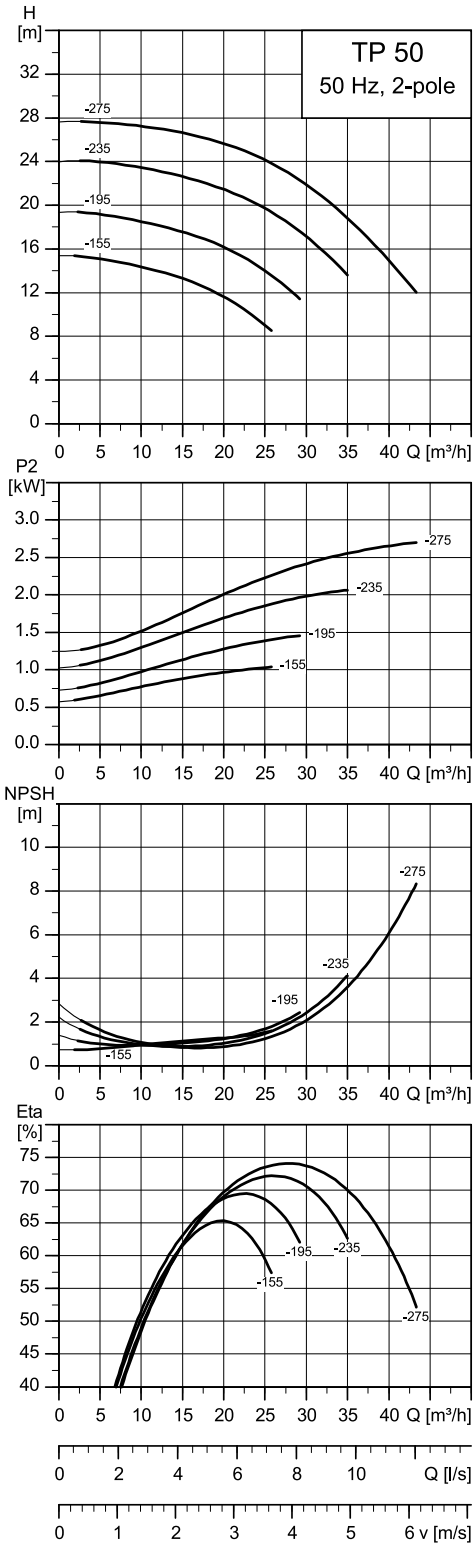

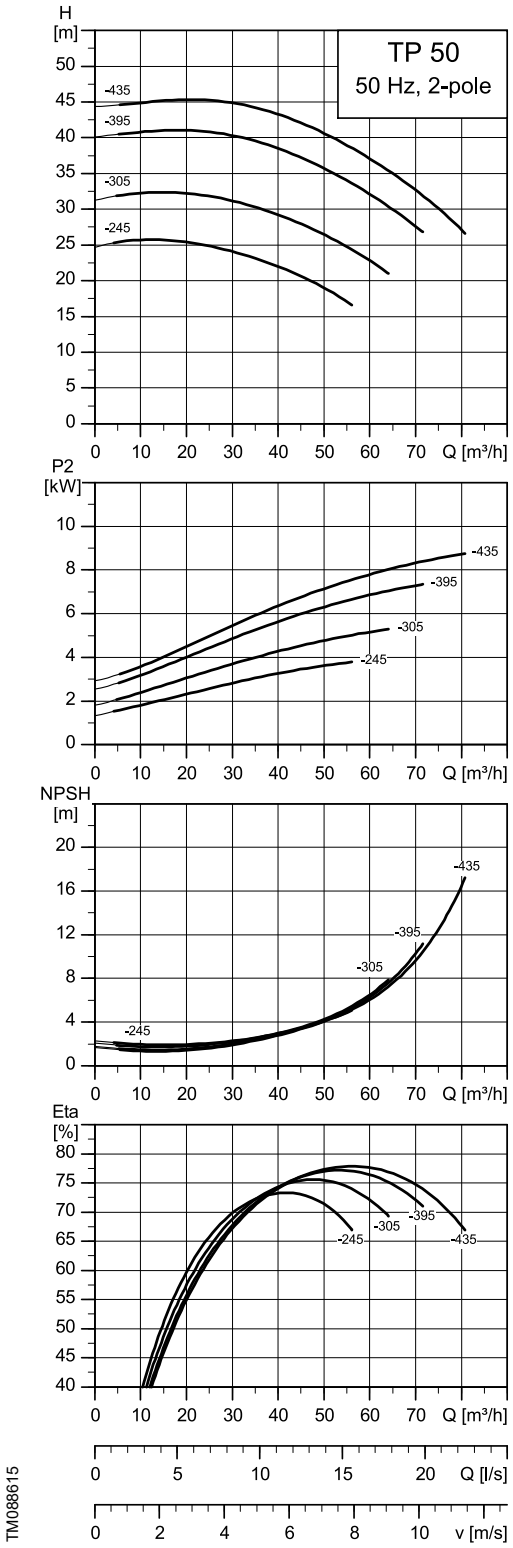

TM088615

TM088616

Note: All curves apply to single-head pumps. For further information, see section Curve conditions.

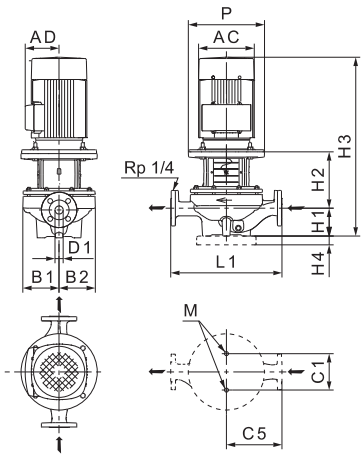

TM028632

TP 50			-155/2	-195/2	-235/2	-245/2	-275/2	-305/2	-395/2	-435/2
Series			300	300	300	300	300	300	300	300
IEC size	1~ TP		-	-	-	-	-	-	-	-
	3~ TP		80	90	90	112	100	132	132	160
P2	1~/3~ TP	[kW]	-/1.1	-/1.5	-/2.2	-/4	-/3	-/5.5	-/7.5	-/11
PN			PN 16	PN 16	PN 16	PN 16	PN 16	PN 16	PN 16	PN 16
T_{min}; T_{max}		[°C]	[-25;120]	[-25;120]	[-25;120]	[-25;120]	[-25;120]	[-25;120]	[-25;120]	[-25;120]
D1		[mm]	50	50	50	50	50	50	50	50
AC	1~/3~ TP	[mm]	-/157	-/175	-/175	-/222	-/199	-/260	-/260	-/314
AD	1~/3~ TP	[mm]	-/124	-/143	-/143	-/169	-/159	-/193	-/193	-/240
P		[mm]	200	140	140	250	250	300	300	350
B1		[mm]	117	117	117	149	117	149	149	149
B2		[mm]	117	117	117	128	117	128	128	128
C1		[mm]	144	144	144	144	144	144	144	144
C5		[mm]	170	170	170	220	170	220	220	220
L1		[mm]	340	340	340	440	340	440	440	440
H1		[mm]	115	115	115	115	115	110	115	115
H2		[mm]	178.5	178.5	178.5	173.5	198.5	212.5	212.5	242.5
H3	1~/3~ TP	[mm]	-/548.5	-/567.5	-/592.5	-/608.5	-/626.5	-/722.5	-/722.5	-/862.5
H4		[mm]	-	-	-	-	-	-	-	35
M			M16	M16	M16	M16	M16	M16	M16	M16

TP 50-XX/2

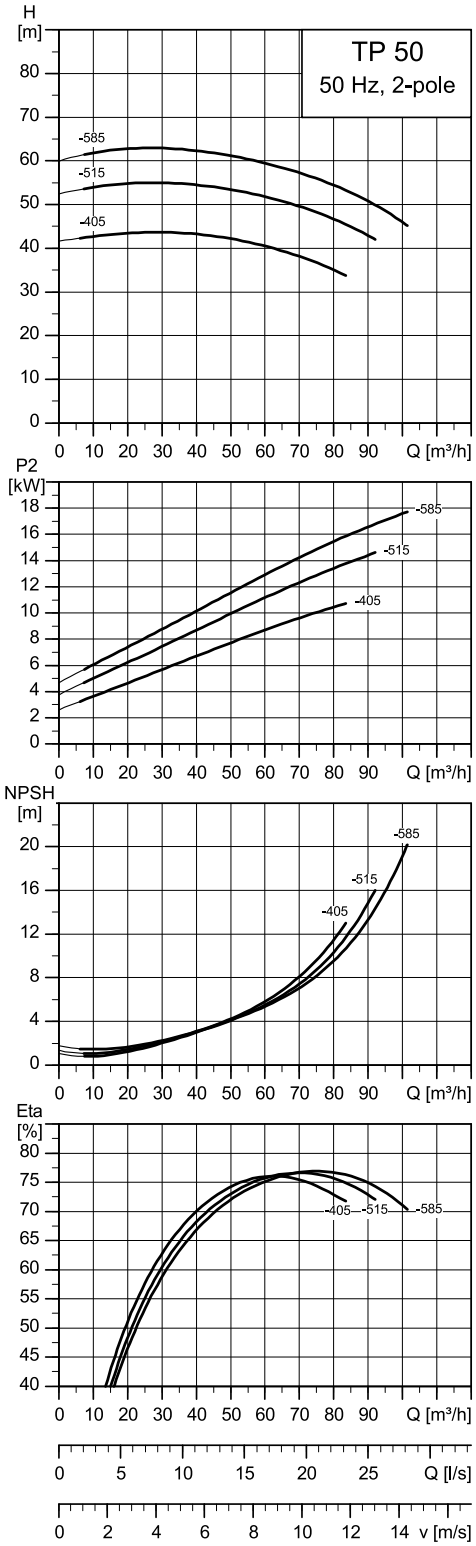

TM088617

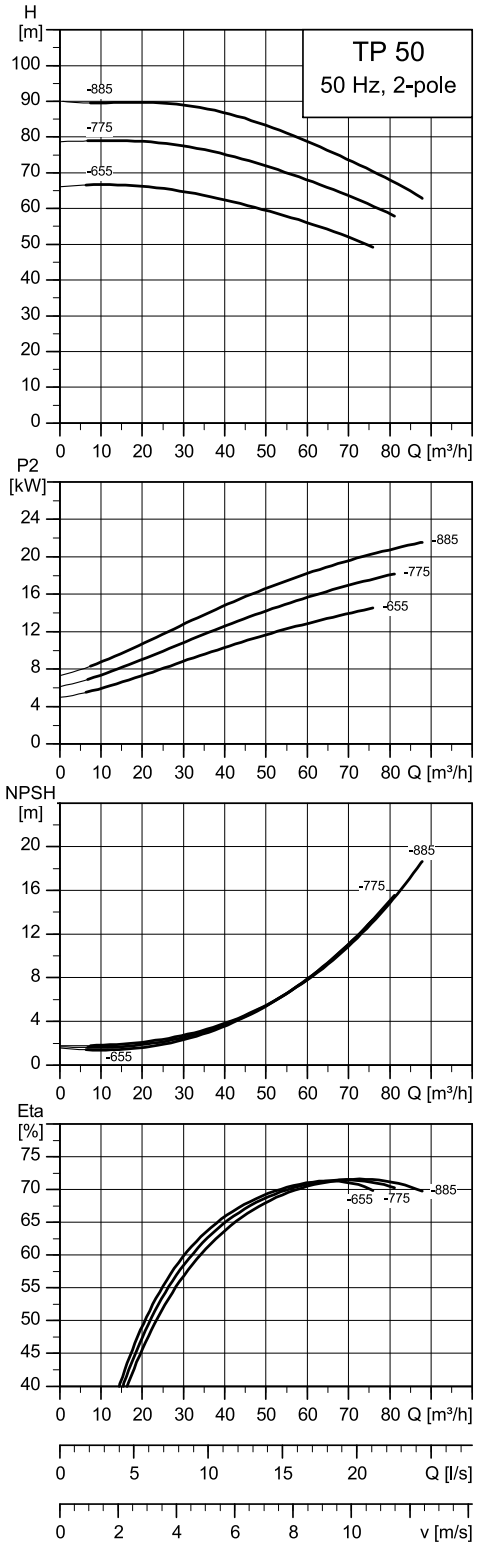

TM088618

Note: All curves apply to single-head pumps. For further information, see section Curve conditions.

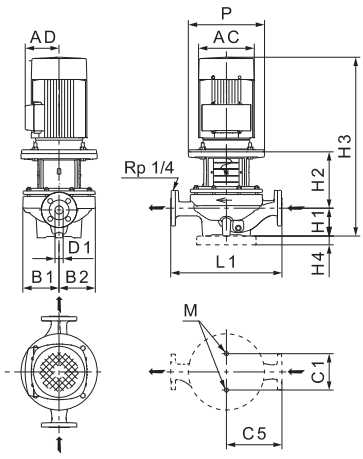

TM028632

TP 50			-405/2	-515/2	-585/2	-655/2	-775/2	-885/2
Series			300	300	300	300	300	300
IEC size	1~ TP		-	-	-	-	-	-
	3~ TP		160	160	160	160	160	180
P2	1~/3~ TP	[kW]	-/11	-/15	-/18.5	-/15	-/18.5	-/22
PN			PN 16	PN 16	PN 16	PN 16	PN 16	PN 16
Tmin;Tmax		[°C]	[-25;120]	[-25;120]	[-25;120]	[-25;120]	[-25;120]	[-25;120]
D1		[mm]	50	50	50	50	50	50
AC	1~/3~ TP	[mm]	-/314	-/314	-/314	-/314	-/314	-/355
AD	1~/3~ TP	[mm]	-/240	-/240	-/240	-/240	-/240	-/255
P		[mm]	350	350	350	350	350	350
B1		[mm]	161	161	161	186	186	186
B2		[mm]	151	151	151	171	171	171
C1		[mm]	144	144	144	144	144	144
C5		[mm]	260	260	260	220	220	220
L1		[mm]	475	475	475	440	440	440
H1		[mm]	110	110	110	110	110	110
H2		[mm]	242.5	242.5	242.5	242.5	242.5	242.5
H3	1~/3~ TP	[mm]	-/857.5	-/857.5	-/901.5	-/857.5	-/901.5	-/932.5
H4		[mm]	35	35	35	35	35	35
M			M16	M16	M16	M16	M16	M16

TP 65-XX/2

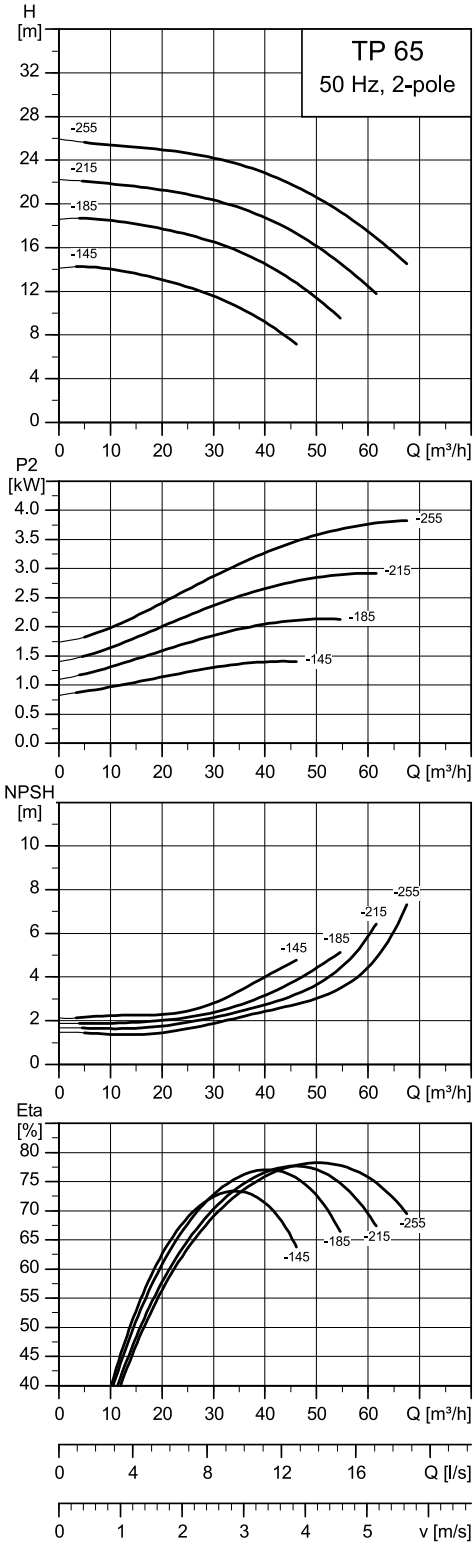

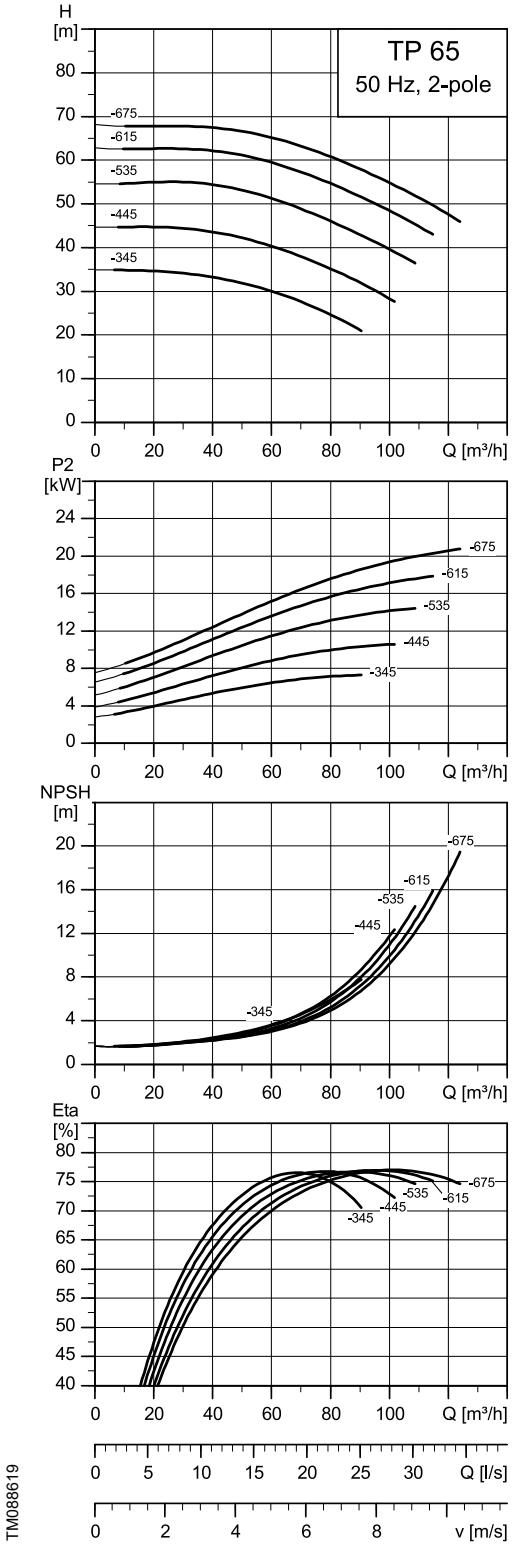

TM088619

TM088620

Note: All curves apply to single-head pumps. For further information, see section Curve conditions.

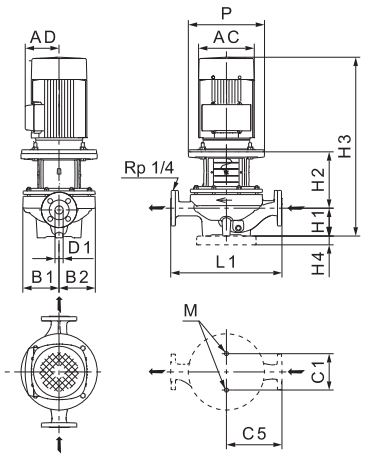

TM028632

TP 65			-145/2	-185/2	-215/2	-255/2	-345/2	-445/2	-535/2	-615/2	-675/2
Series			300	300	300	300	300	300	300	300	300
IEC size	1~ TP		-	-	-	-	-	-	-	-	-
	3~ TP		90	90	100	112	132	160	160	160	180
P2	1~/3~ TP	[kW]	-/1.5	-/2.2	-/3	-/4	-/7.5	-/11	-/15	-/18.5	-/22
PN			PN 16	PN 16	PN 16	PN 16	PN 16	PN 16	PN 16	PN 16	PN 16
T_{min}; T_{max}		[°C]	[-25;120]	[-25;120]	[-25;120]	[-25;120]	[-25;120]	[-25;120]	[-25;120]	[-25;120]	[-25;120]
D1		[mm]	65	65	65	65	65	65	65	65	65
AC	1~/3~ TP	[mm]	-/175	-/175	-/199	-/222	-/260	-/314	-/314	-/314	-/355
AD	1~/3~ TP	[mm]	-/143	-/143	-/159	-/169	-/193	-/240	-/240	-/240	-/255
P		[mm]	140	140	250	250	300	350	350	350	350
B1		[mm]	135	134	134	134	185	185	185	185	185
B2		[mm]	122	122	122	122	169	169	169	169	169
C1		[mm]	144	144	144	144	144	144	144	144	144
C5		[mm]	180	180	180	180	250	250	250	250	250
L1		[mm]	360	360	360	360	475	475	475	475	475
H1		[mm]	105	105	105	105	125	125	125	125	125
H2		[mm]	164	164	192	192	230.5	260.5	260.5	260.5	260.5
H3	1~/3~ TP	[mm]	-/543	-/568	-/610	-/617	-/750.5	-/890.5	-/890.5	-/934.5	-/965.5
H4		[mm]	-	-	-	-	-	35	35	35	35
M			M16	M16	M16	M16	M16	M16	M16	M16	M16

TP 65-XX/2

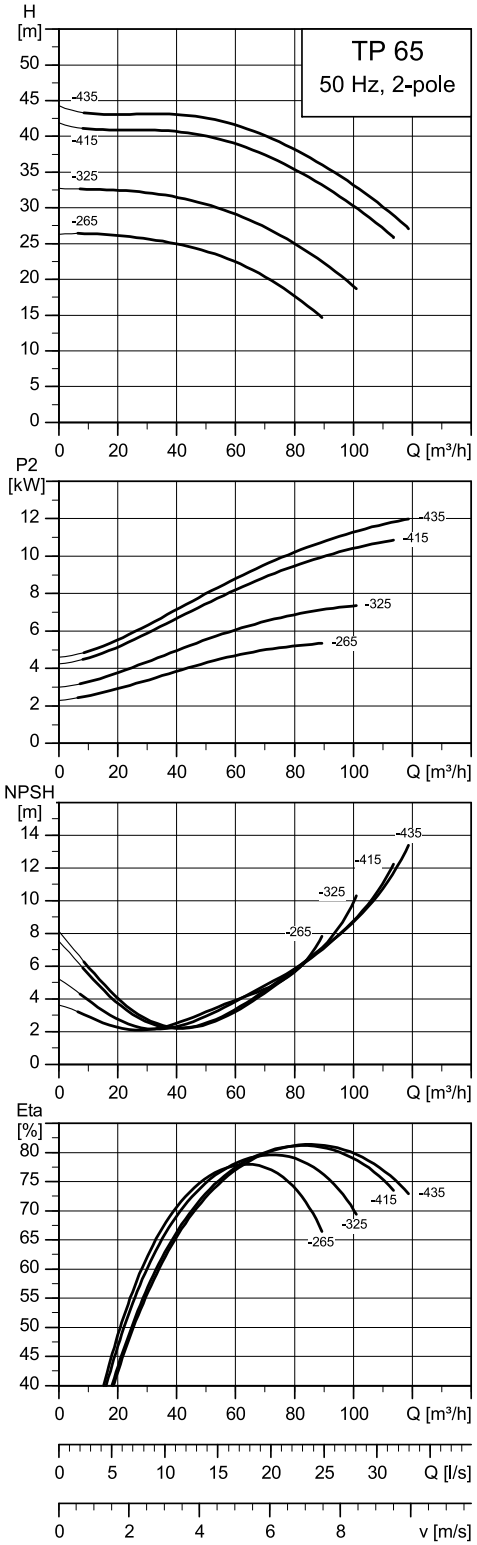

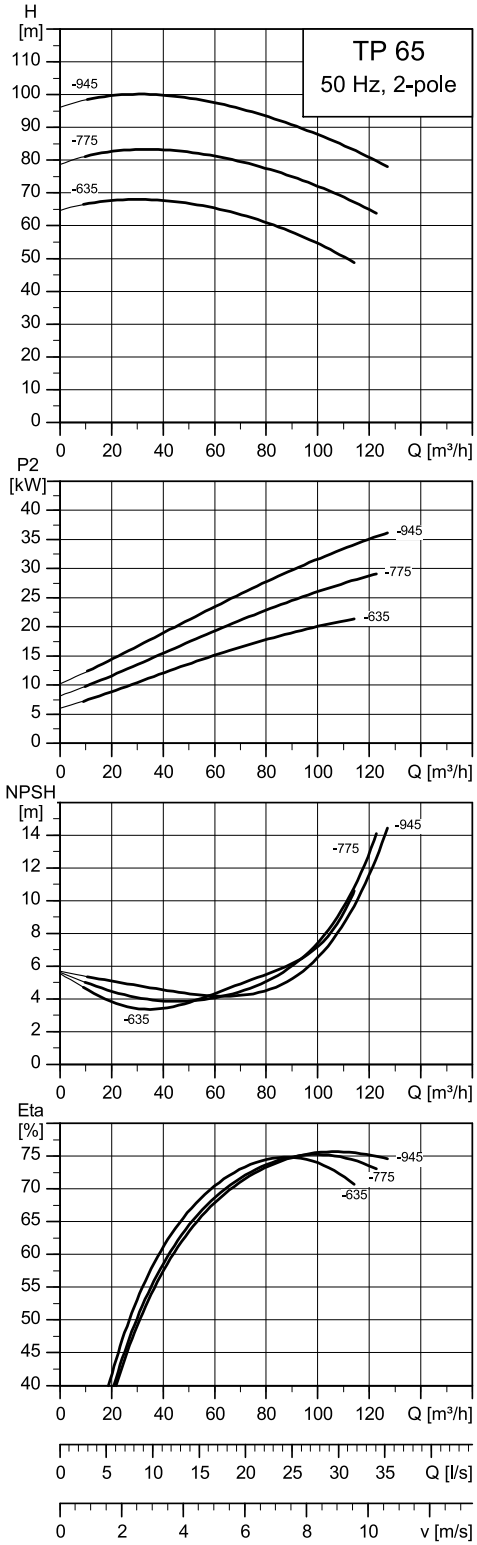

Note: All curves apply to single-head pumps. For further information, see section Curve conditions.

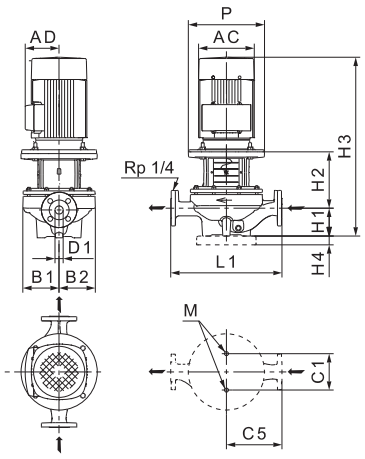

TM028632

TP 65			-265/2	-325/2	-415/2	-435/2	-635/2	-775/2	-945/2
Series			300	300	300	300	300	300	300
IEC size	1~ TP		-	-	-	-	-	-	-
	3~ TP		90	90	100	112	180	200	200
P2	1~/3~ TP	[kW]	-/5.5	-/7.5	-/11	-/15	-/22	-/30	-/37
PN			PN 16	PN 16	PN 16	PN 16	PN 16	PN 16	PN 16
Tmin;Tmax		[°C]	[-25;120]	[-25;120]	[-25;120]	[-25;120]	[-25;120]	[-25;120]	[-25;120]
D1		[mm]	65	65	65	65	65	65	65
AC	1~/3~ TP	[mm]	-/293	-/293	-/330	-/330	-/355	-/405	-/420
AD	1~/3~ TP	[mm]	-/228	-/228	-/260	-/260	-/255	-/302	-/310
P		[mm]	300	300	350	350	350	400	400
B1		[mm]	160	160	160	160	203	203	203
B2		[mm]	126	126	126	126	179	179	179
C1		[mm]	144	144	144	144	230	230	230
C5		[mm]	220	220	220	220	275	275	275
L1		[mm]	440	440	440	440	550	550	550
H1		[mm]	115	115	115	115	130	130	130
H2		[mm]	226	226	256	256	253	253	253
H3	1~/3~ TP	[mm]	-/771	-/771	-/924	-/924	-/963	-/1050	-/1050
H4		[mm]	-	-	-	-	35	35	35
M			M16	M16	M16	M16	M16	M16	M16

TP 80-XX/2

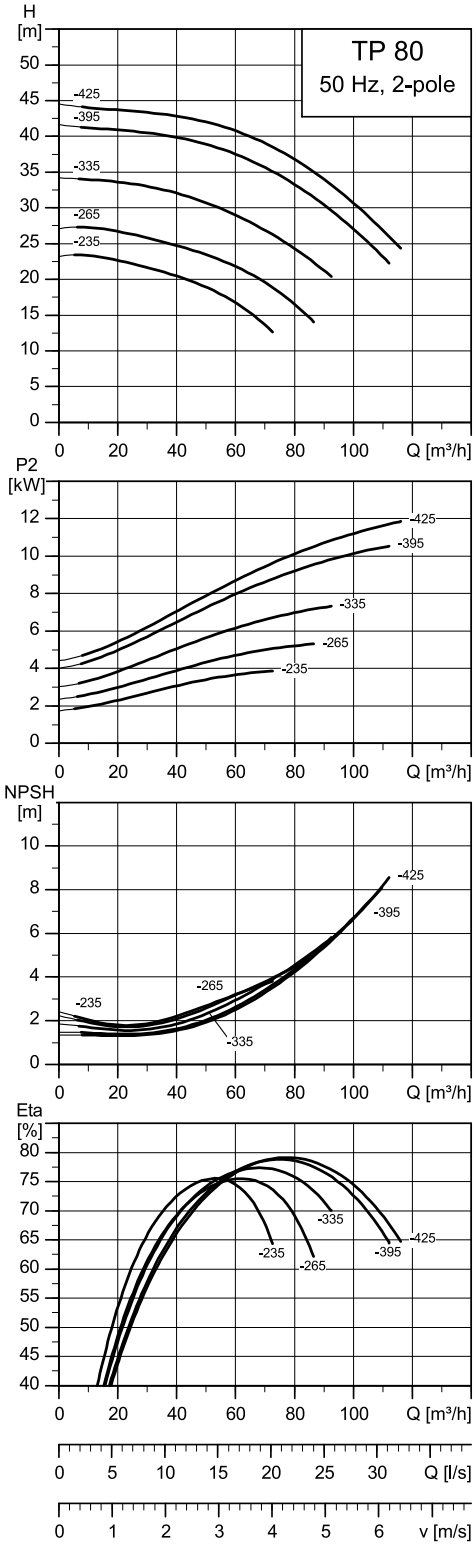

TM088622

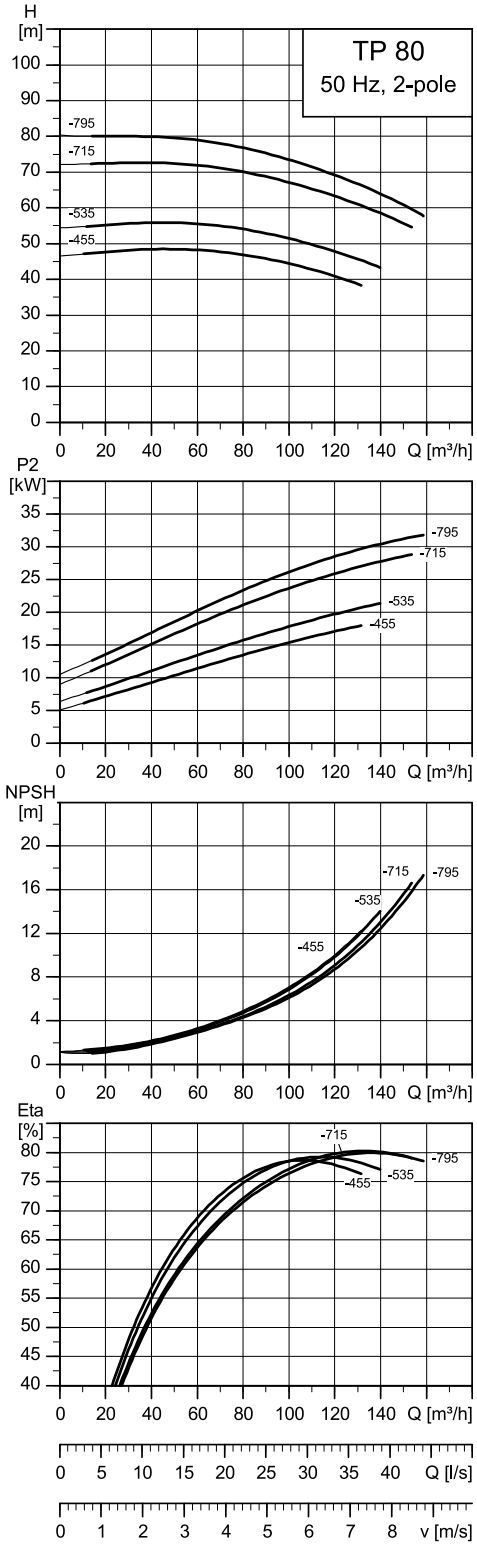

TM088623

Note: All curves apply to single-head pumps. For further information, see section Curve conditions.

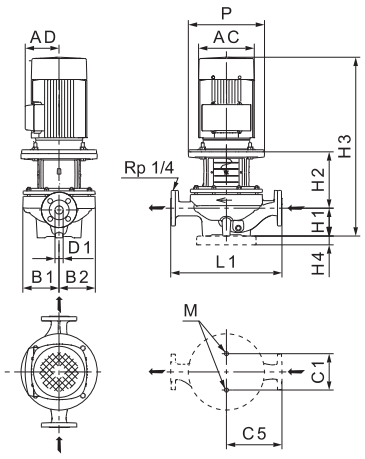

TM028632

TP 80			-235/2	-265/2	-335/2	-395/2	-405/2	-425/2	-455/2	-535/2	-715/2	-795/2
Series			300	300	300	300	300	300	300	300	300	300
IEC size	1~ TP		-	-	-	-	-	-	-	-	-	-
	3~ TP		112	132	132	160	160	160	160	180	200	200
P2	1~/3~ TP	[kW]	-/4	-/5.5	-/7.5	-/11	-/15	-/15	-/18.5	-/22	-/30	-/37
PN			PN 16	PN 16	PN 16	PN 16	PN 16	PN 16	PN 16	PN 16	PN 16	PN 16
T_{min};T_{max}		[°C]	[-25;120]	[-25;120]	[-25;120]	[-25;120]	[-25;120]	[-25;120]	[-25;120]	[-25;120]	[-25;120]	[-25;120]
D1		[mm]	80	80	80	80	80	80	80	80	80	80
AC	1~/3~ TP	[mm]	-/222	-/260	-/260	-/314	-/314	-/314	-/314	-/355	-/405	-/420
AD	1~/3~ TP	[mm]	-/169	-/193	-/193	-/240	-/240	-/240	-/240	-/255	-/302	-/310
P		[mm]	250	300	300	350	350	350	350	350	400	400
B1		[mm]	156	156	156	156	180	156	197	197	197	197
B2		[mm]	125	125	125	125	134	125	170	170	170	170
C1		[mm]	144	144	144	144	144	144	230	230	230	230
C5		[mm]	230	230	230	230	227	230	300	300	300	300
L1		[mm]	440	440	440	440	440	440	550	550	550	550
H1		[mm]	115	115	115	115	140	115	140	140	140	140
H2		[mm]	173.5	212.5	212.5	242.5	242.5	242.5	253	253	253	253
H3	1~/3~ TP	[mm]	-/608.5	-/722.5	-/722.5	-/862.5	-/887.5	-/862.5	-/942	-/973	-/1060	-/1060
H4		[mm]	-	-	-	35	35	35	35	35	35	35
M			M16	M16	M16	M16	M16	M16	M16	M16	M16	M16

TP 80-XX/2

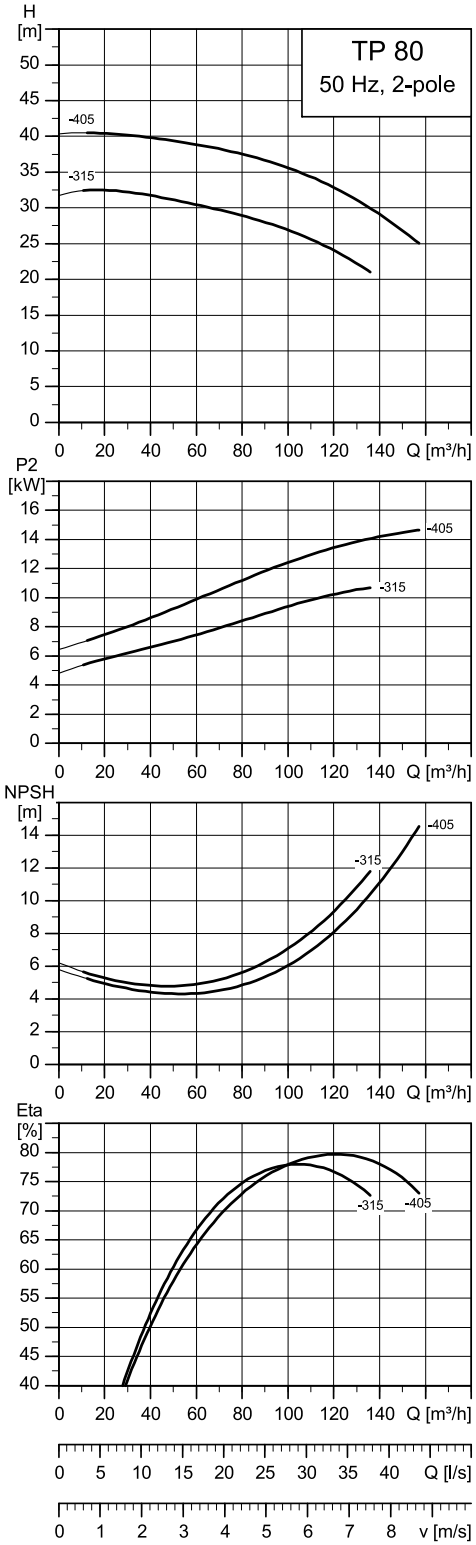

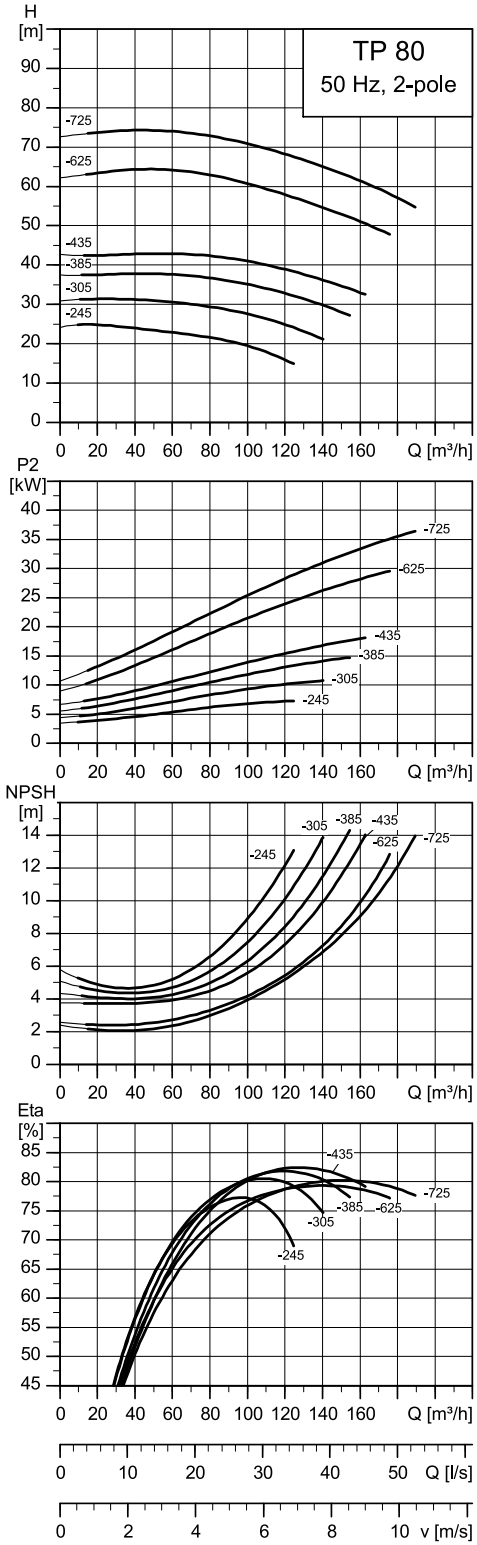

Note: All curves apply to single-head pumps. For further information, see section Curve conditions.

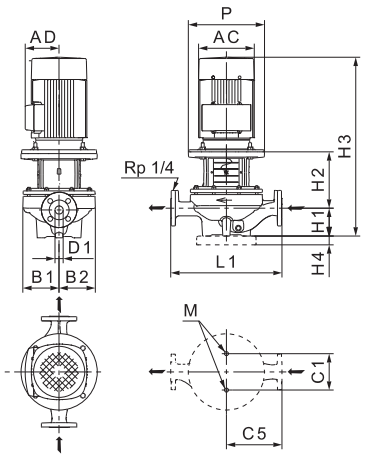

TP 80			-245/2	-305/2	-315/2	-385/2	-405/2	-435/2	-625/2	-725/2
Series			300	300	300	300	300	300	300	300
IEC size	1~ TP		-	-	-	-	-	-	-	-
	3~ TP		132	160	160	160	160	160	160	180
P2	1~/3~ TP	[kW]	-/7.5	-/11	-/11	-/15	-/15	-/15	-/18.5	-/22
PN			PN 16	PN 16	PN 16	PN 16	PN 16	PN 16	PN 16	PN 16
T_{min};T_{max}		[°C]	[-25;120]	[-25;120]	[-25;120]	[-25;120]	[-25;120]	[-25;120]	[-25;120]	[-25;120]
D1		[mm]	80	80	80	80	80	80	80	80
AC	1~/3~ TP	[mm]	-/293	-/330	-/314	-/330	-/314	-/330	-/314	-/355
AD	1~/3~ TP	[mm]	-/330	-/260	-/240	-/260	-/240	-/260	-/240	-/255
P		[mm]	350	350	350	350	350	350	350	350
B1		[mm]	179	179	180	179	180	156	197	197
B2		[mm]	130	130	134	130	134	130	152	152
C1		[mm]	144	144	144	144	144	144	230	230
C5		[mm]	220	220	227	220	227	220	250	250
L1		[mm]	440	440	440	440	440	440	500	500
H1		[mm]	115	115	140	115	140	115	115	115
H2		[mm]	235	265	242.5	265	242.5	265	276	276
H3	1~/3~ TP	[mm]	-/780	-/933	-/887.5	-/933	-/887.5	-/973	-/1143	-/1143
H4		[mm]	-	35	35	35	35	35	35	35
M			M16	M16	M16	M16	M16	M16	M16	M16

TP 100-XX/2

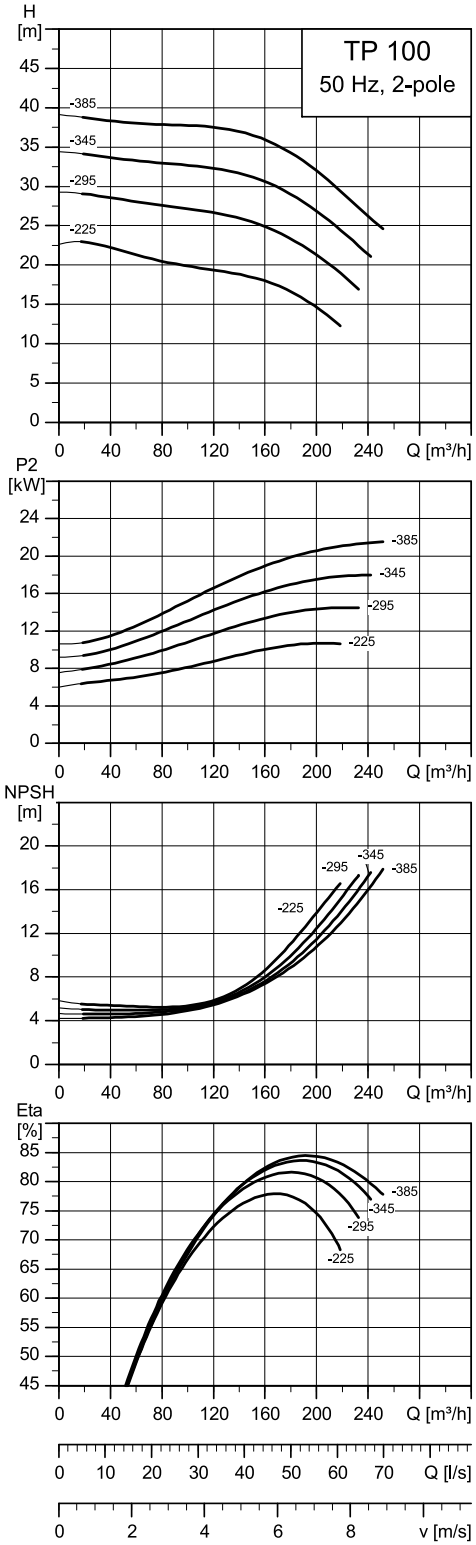

TM088625

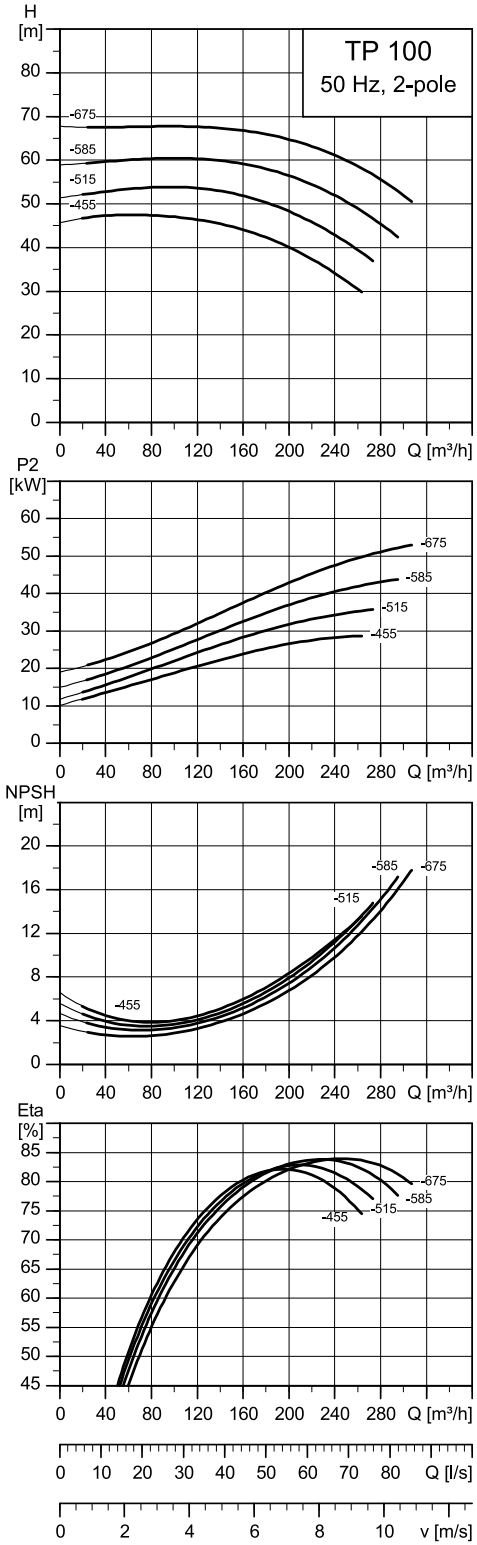

TM088626

Note: All curves apply to single-head pumps. For further information, see section Curve conditions.

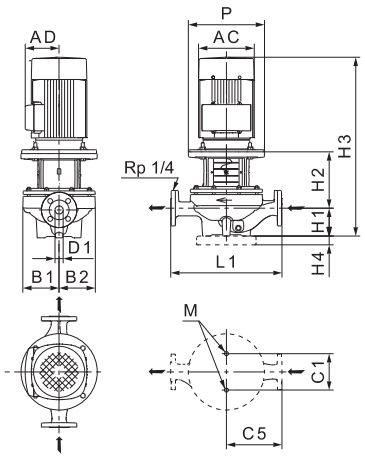

TM028632

TP 100			-225/2	-295/2	-345/2	-385/2	-455/2	-515/2	-585/2	-675/2
Series			300	300	300	300	300	300	300	300
IEC size	1~ TP		-	-	-	-	-	-	-	-
	3~ TP		160	160	160	180	200	200	225	250
P2	1~/3~ TP	[kW]	-/11	-/15	-/18.5	-/22	-/30	-/37	-/45	-/55
PN			PN 16	PN 16	PN 16	PN 16	PN 16	PN 16	PN 16	PN 16
T_{min};T_{max}		[°C]	[-25;120]	[-25;120]	[-25;120]	[-25;120]	[-25;120]	[-25;120]	[-25;120]	[-25;120]
D1		[mm]	100	100	100	100	100	100	100	100
AC	1~/3~ TP	[mm]	-/314	-/314	-/314	-/355	-/405	-/420	-/445	-/490
AD	1~/3~ TP	[mm]	-/240	-/240	-/240	-/255	-/302	-/310	-/335	-/365
P		[mm]	350	350	350	350	400	400	350	550
B1		[mm]	201	201	201	201	220	220	220	220
B2		[mm]	145	145	145	145	191	191	191	191
C1		[mm]	230	230	230	230	230	230	230	230
C5		[mm]	300	300	300	300	390	390	390	390
L1		[mm]	550	550	550	550	670	670	670	670
H1		[mm]	140	140	140	140	170	170	170	170
H2		[mm]	261.5	261.5	261.5	261.5	278	278	308	308
H3	1~/3~ TP	[mm]	-/906.5	-/906.5	-/950.5	-/981.5	-/1115	-/1115	-/1188	-/1248
H4		[mm]	35	35	35	35	35	35	35	35
M			M16	M16	M16	M16	M16	M16	M16	M16

TP 125-XX/2

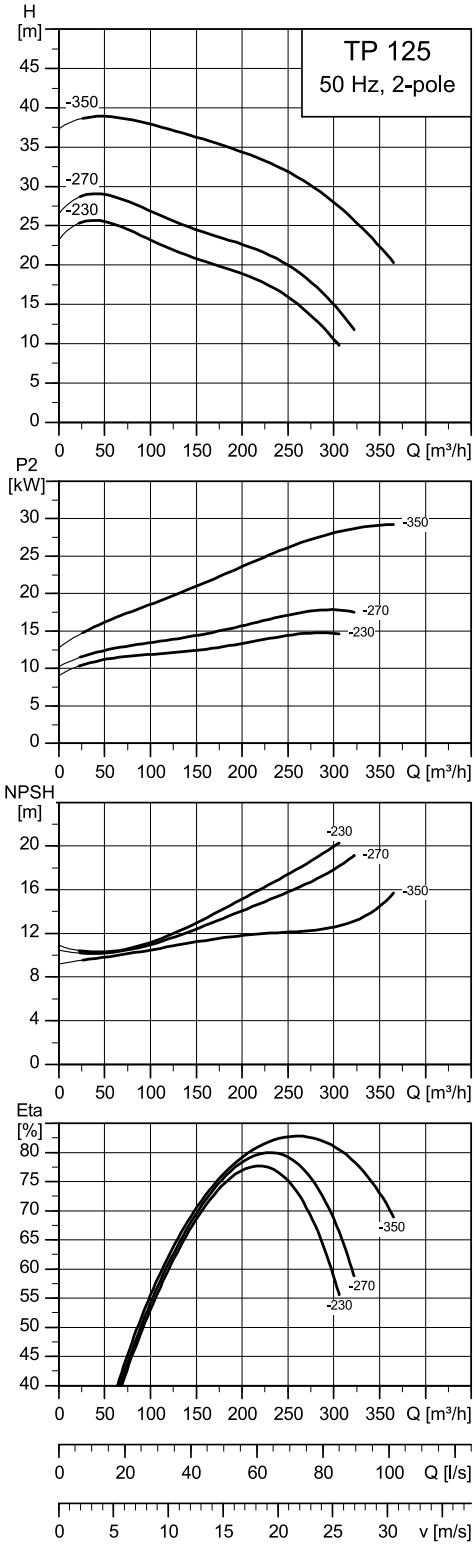

TM090733

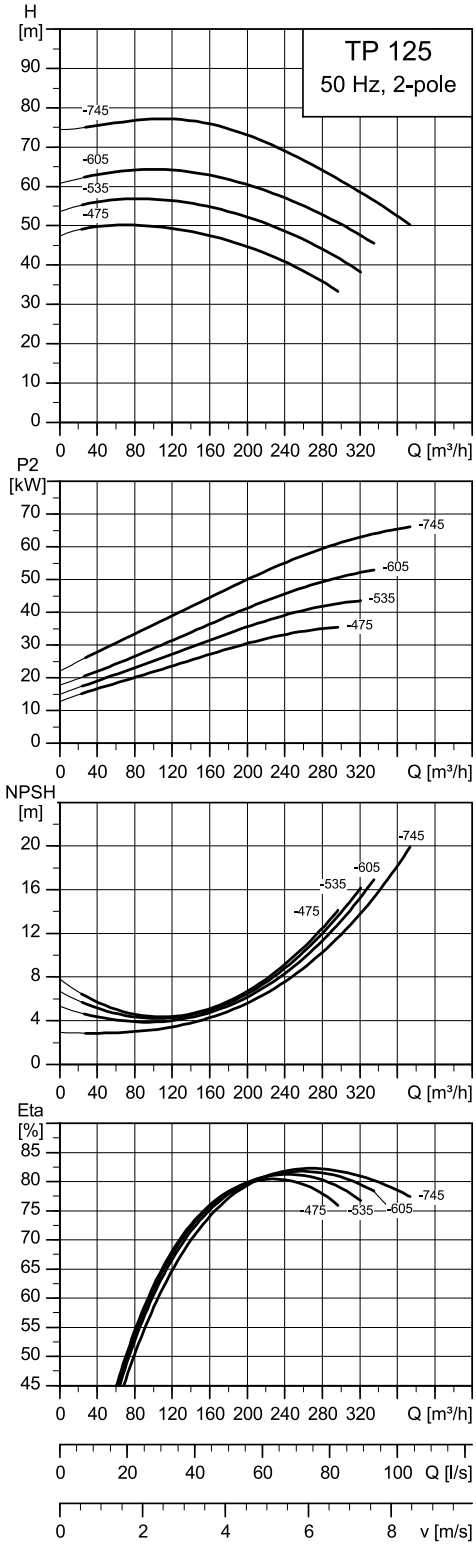

TM088627

Note: All curves apply to single-head pumps. For further information, see section Curve conditions.

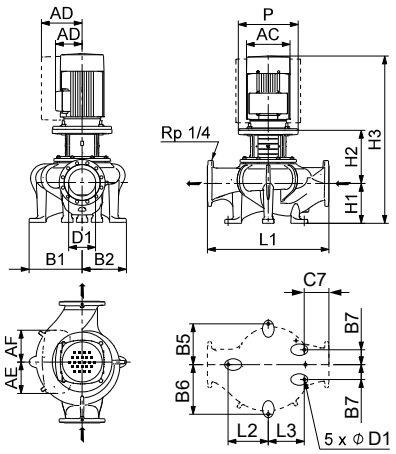

TM086748

TP 125			-230/2	-270/2	-350/2	-475/2	-535/2	-605/2	-745/2
Series			300	300	300	300	300	300	300
IEC size	1~ TP		-	-	-	-	-	-	-
	3~ TP		160	160	200	200	225	250	280
P2	1~/3~ TP	[kW]	-/15	-/18.5	-/30	-/37	-/45	-/55	-/75
PN			PN 16	PN 16	PN 16	PN 16	PN 16	PN 16	PN 16
T_{min};T_{max}		[°C]	[-25;120]	[-25;120]	[-25;120]	[-25;120]	[-25;120]	[-25;120]	[-25;120]
D1		[mm]	125	125	125	125	125	125	125
AC	1~/3~ TP	[mm]	-/330	-/330	-/420	-/420	-/445	-/490	-/580
AD	1~/3~ TP	[mm]	-/260	-/260	-/310	-/310	-/335	-/365	-/400
P		[mm]	15	18.5	30	400	350	550	550
B1		[mm]	243	243	243	247	247	247	247
B2		[mm]	193	193	193	193	193	193	193
B5		[mm]	170	170	170	170	170	170	170
B6		[mm]	220	220	220	170	170	170	170
B7		[mm]	103.5	103.5	103.5	99.7	99.7	99.7	99.7
C7		[mm]	126.5	126.5	126.5	144	144	144	144
L1		[mm]	620	620	620	620	620	620	620
L2		[mm]	170	170	170	170	170	170	170
L3		[mm]	183.5	183.5	183.5	196.5	196.5	196.5	196.5
H1		[mm]	210	210	210	210	210	210	210
H2		[mm]	275	275	275	278	308	308	308
H3	1~/3~ TP	[mm]	-/1038	-/1078	-/1237	-/1155	-/1228	-/1288	-/1348
H4		[mm]	-	-	-	-	-	-	-
∅ D1			18	18	18	18	18	18	18

TP, 4-pole, PN 16

TP 40-XX/4

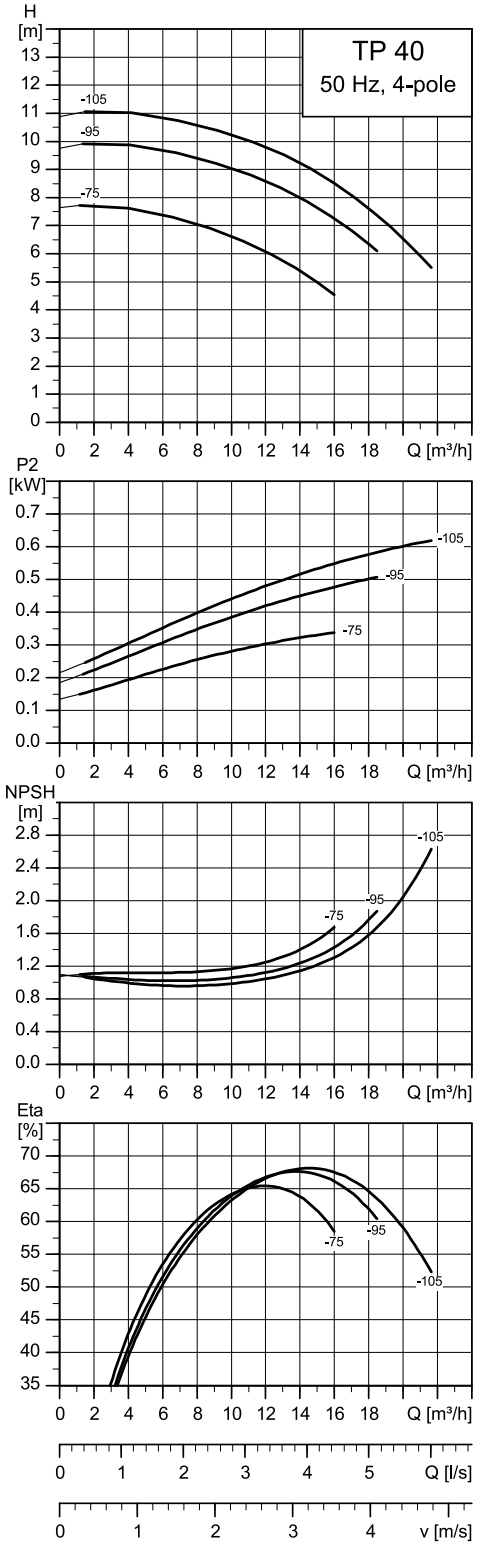

TM088576

Note: All curves apply to single-head pumps. For further information, see section Curve conditions.

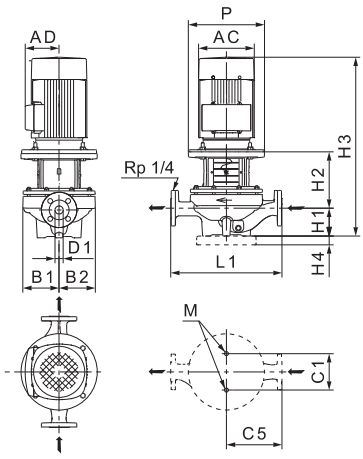

TP 40			-75/4	-95/4	-105/4
Series			300	300	300
IEC size	1~ TP		-	-	-
	3~ TP		71	80	80
P2	1~/3~ TP	[kW]	-/0.37	-/0.55	-/0.75
PN			PN 16	PN 16	PN 16
T_{min};T_{max}		[°C]	[-25;120]	[-25;120]	[-25;120]
D1		[mm]	40	40	40
AC	1~/3~ TP	[mm]	-/138	-/157	-/157
AD	1~/3~ TP	[mm]	-/110	-/124	-/124
P		[mm]	160	200	200
B1		[mm]	135	135	135
B2		[mm]	121	121	121
C1		[mm]	144	144	144
C5		[mm]	220	220	220
L1		[mm]	440	440	440
H1		[mm]	115	115	115
H2		[mm]	162.5	172.5	172.5
H3	1~/3~ TP	[mm]	-/491.5	-/542.5	-/577.5
H4		[mm]	-	-	-
M			M16	M16	M16

TP 50-XX/4

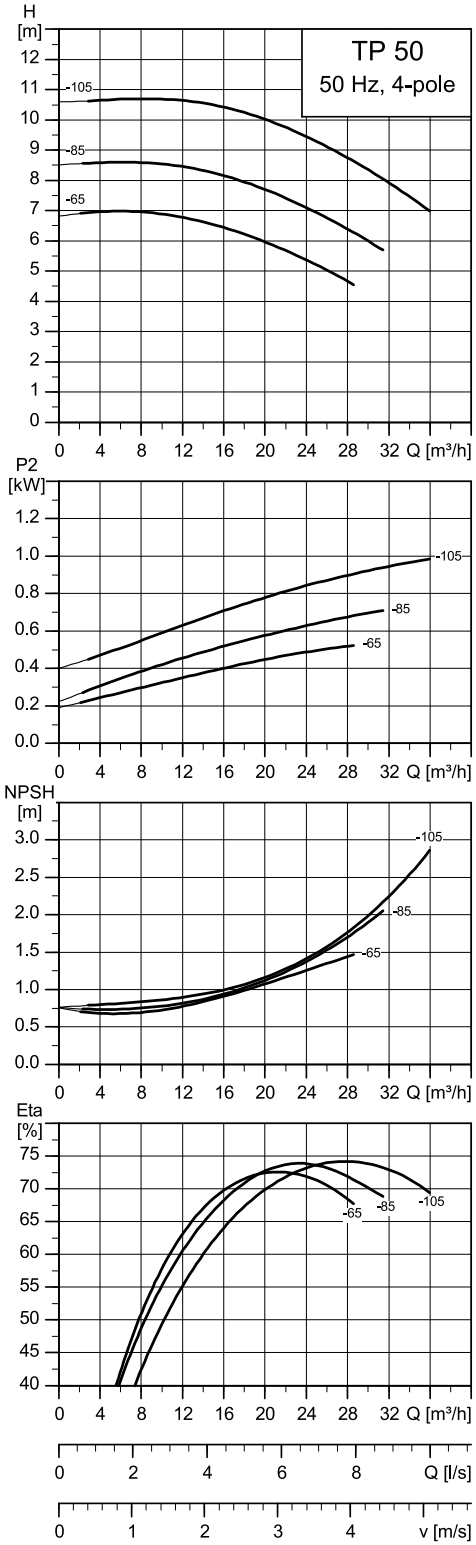

TM088577

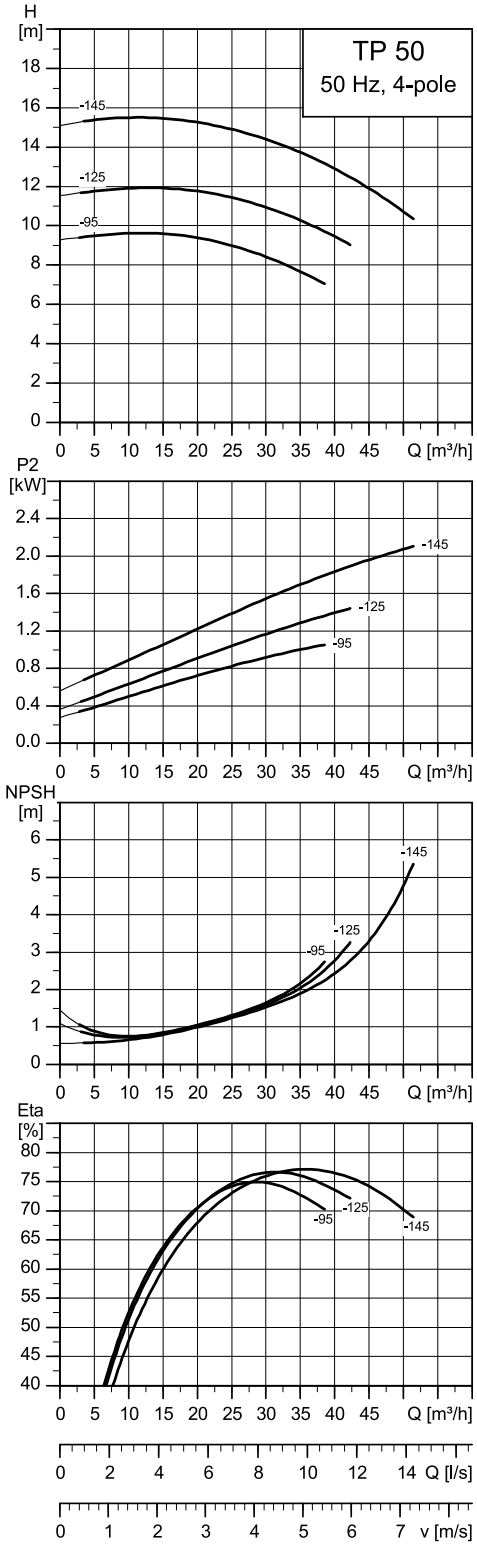

TM088578

Note: All curves apply to single-head pumps. For further information, see section Curve conditions.

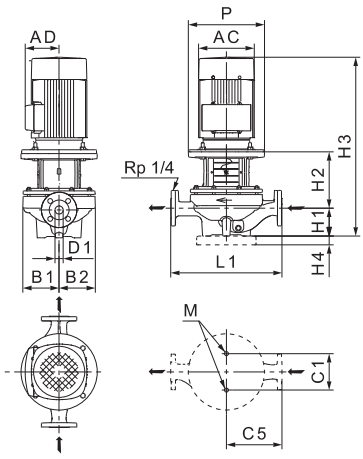

TM028632

TP 50			-65/4	-85/4	-95/4	-105/4	-125/4	-145/4
Series			300	300	300	300	300	300
IEC size	1~ TP		-	-	-	-	-	-
	3~ TP		80	80	90	90	90	100
P2	1~/3~ TP	[kW]	-/0.55	-/0.75	-/1.1	-/1.1	-/1.5	-/2.2
PN			PN 16	PN 16	PN 16	PN 16	PN 16	PN 16
Tmin;Tmax		[°C]	[-25;120]	[-25;120]	[-25;120]	[-25;120]	[-25;120]	[-25;120]
D1		[mm]	50	50	50	50	50	50
AC	1~/3~ TP	[mm]	-/157	-/157	-/175	-/175	-/175	-/199
AD	1~/3~ TP	[mm]	-/124	-/124	-/143	-/143	-/145	-/159
P		[mm]	200	200	200	200	200	250
B1		[mm]	149	149	161	149	161	161
B2		[mm]	128	128	151	128	151	151
C1		[mm]	144	144	144	144	144	144
C5		[mm]	220	220	260	220	260	260
L1		[mm]	440	440	475	440	475	475
H1		[mm]	115	115	110	115	110	110
H2		[mm]	172.5	172.5	145.5	172.5	145.5	173.5
H3	1~/3~ TP	[mm]	-/542.5	-/577.5	-/529.5	-/561.5	-/558.5	-/596.5
H4		[mm]	-	-	-	-	-	-
M			M16	M16	M16	M16	M16	M16

TP 50-XX/4

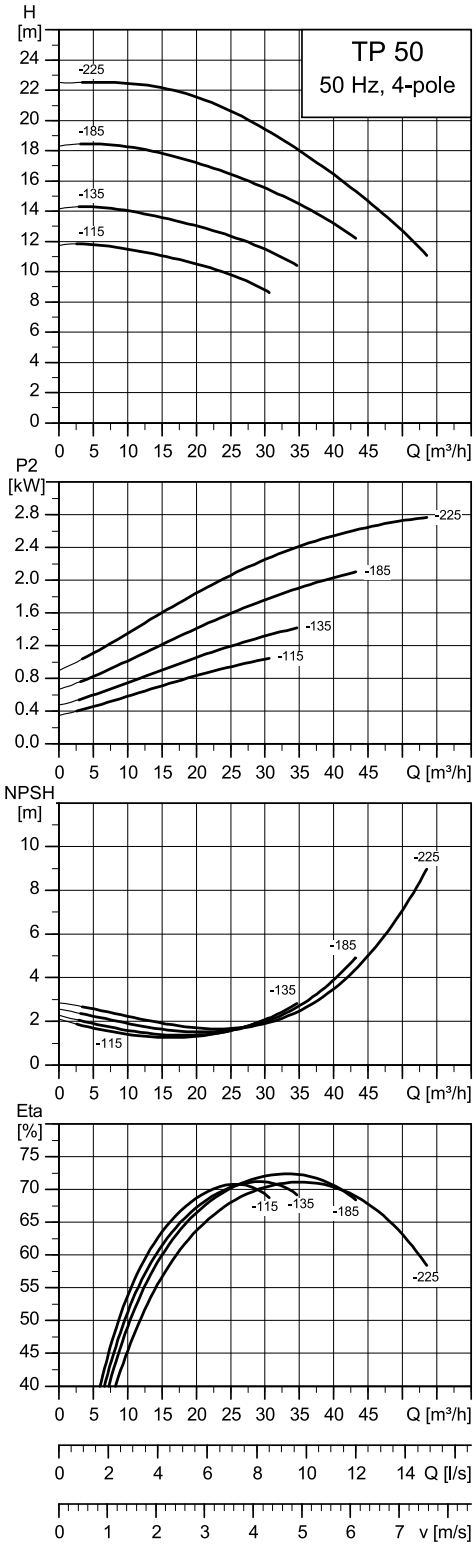

TM088579

Note: All curves apply to single-head pumps. For further information, see section Curve conditions.

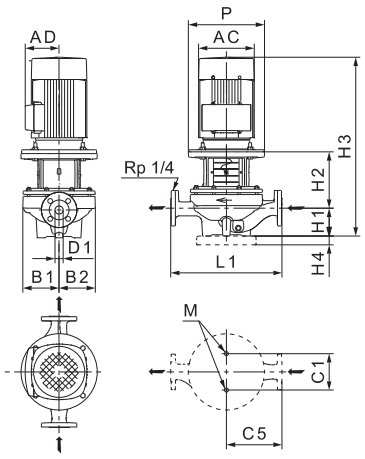

TM028632

TP 50			-115/4	-135/4	-185/4	-225/4
Series			300	300	300	300
IEC size	1~ TP		-	-	-	-
	3~ TP		90	90	100	100
P2	1~/3~ TP	[kW]	-/1.1	-/1.5	-/2.2	-/3
PN			PN 16	PN 16	PN 16	PN 16
T_{min};T_{max}		[°C]	[-25;120]	[-25;120]	[-25;120]	[-25;120]
D1		[mm]	50	50	50	50
AC	1~/3~ TP	[mm]	-/175	-/175	-/199	-/199
AD	1~/3~ TP	[mm]	-/143	-/145	-/159	-/159
P		[mm]	200	200	250	250
B1		[mm]	186	186	186	186
B2		[mm]	171	171	171	171
C1		[mm]	144	144	144	144
C5		[mm]	220	220	220	220
L1		[mm]	440	440	440	440
H1		[mm]	110	110	110	110
H2		[mm]	145.5	145.5	173.5	173.5
H3	1~/3~ TP	[mm]	-/529.5	-/558.5	-/596.5	-/641.5
H4		[mm]	-	-	-	-
M			M16	M16	M16	M16

TP 65-XX/4

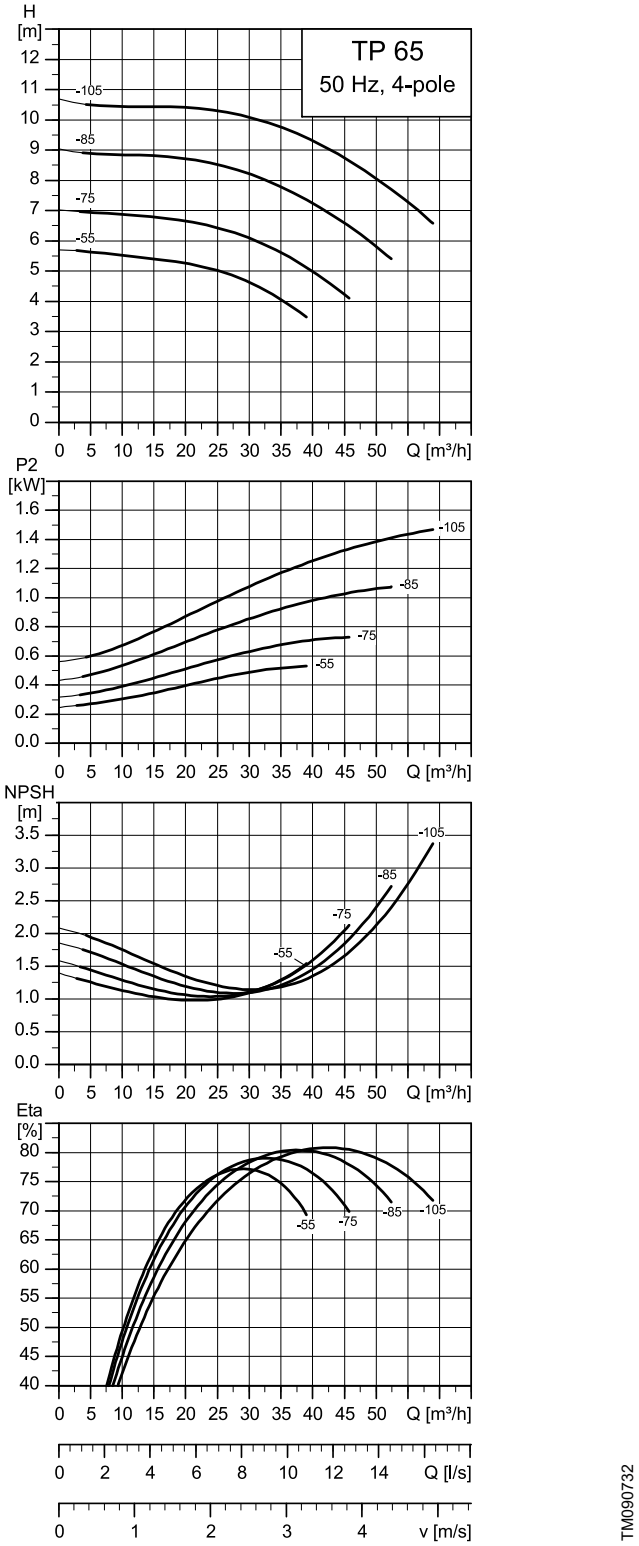

Note: All curves apply to single-head pumps. For further information, see section Curve conditions.

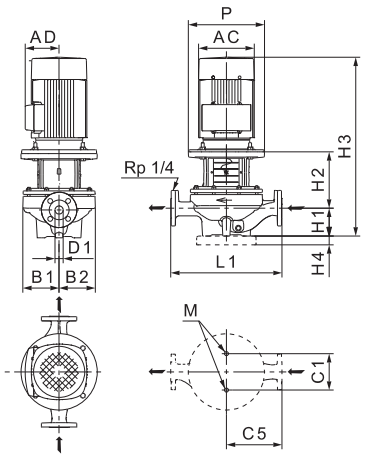

TM028632

TP 65			-55/4	-75/4	-85/4	-105/4
Series			300	300	300	300
IEC size	1~ TP		-	-	-	-
	3~ TP		80	80	90	132
P2	1~/3~ TP	[kW]	-/0.55	-/0.75	-/1.1	-/1.5
PN			PN 16	PN 16	PN 16	PN 16
T_{min};T_{max}		[°C]	[-25;120]	[-25;120]	[-25;120]	[-25;120]
D1		[mm]	65	65	65	65
AC	1~/3~ TP	[mm]	-/175	-/175	-/195	-/195
AD	1~/3~ TP	[mm]	-/150	-/150	-/160	-/160
P		[mm]	200	200	200	200
B1		[mm]	160	160	160	160
B2		[mm]	126	126	126	126
C1		[mm]	144	144	144	144
C5		[mm]	220	220	220	220
L1		[mm]	440	440	440	440
H1		[mm]	115	115	115	115
H2		[mm]	186	186	186	186
H3	1~/3~ TP	[mm]	-/566	-/566	-/599	-/629
H4		[mm]	-	-	-	-
M			M16	M16	M16	M16

TP 65-XX/4

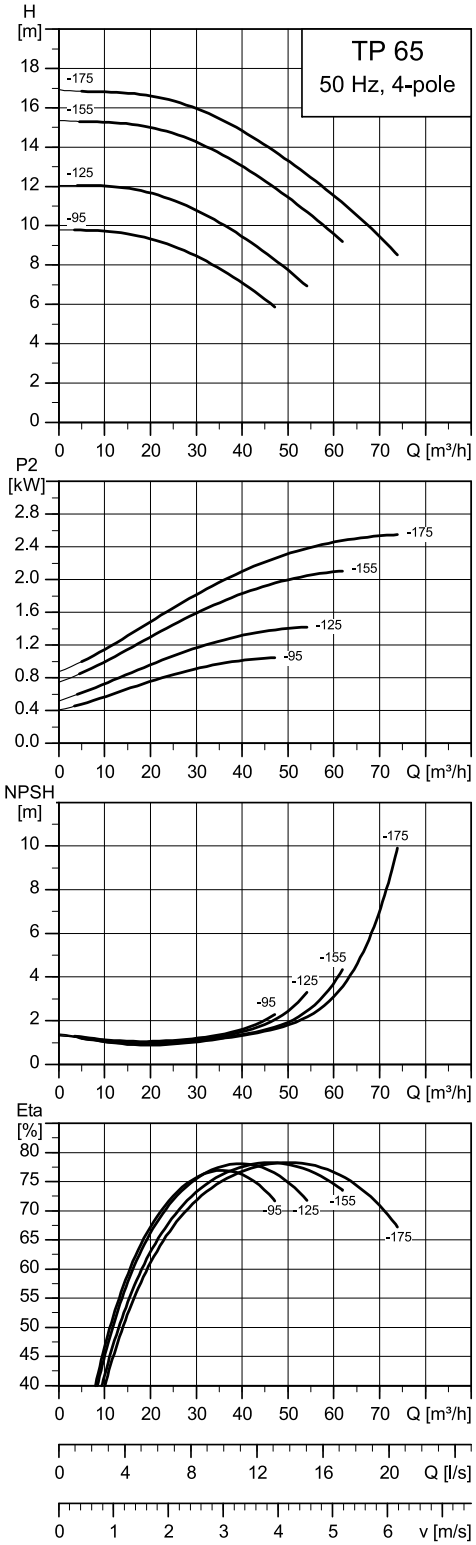

TM088580

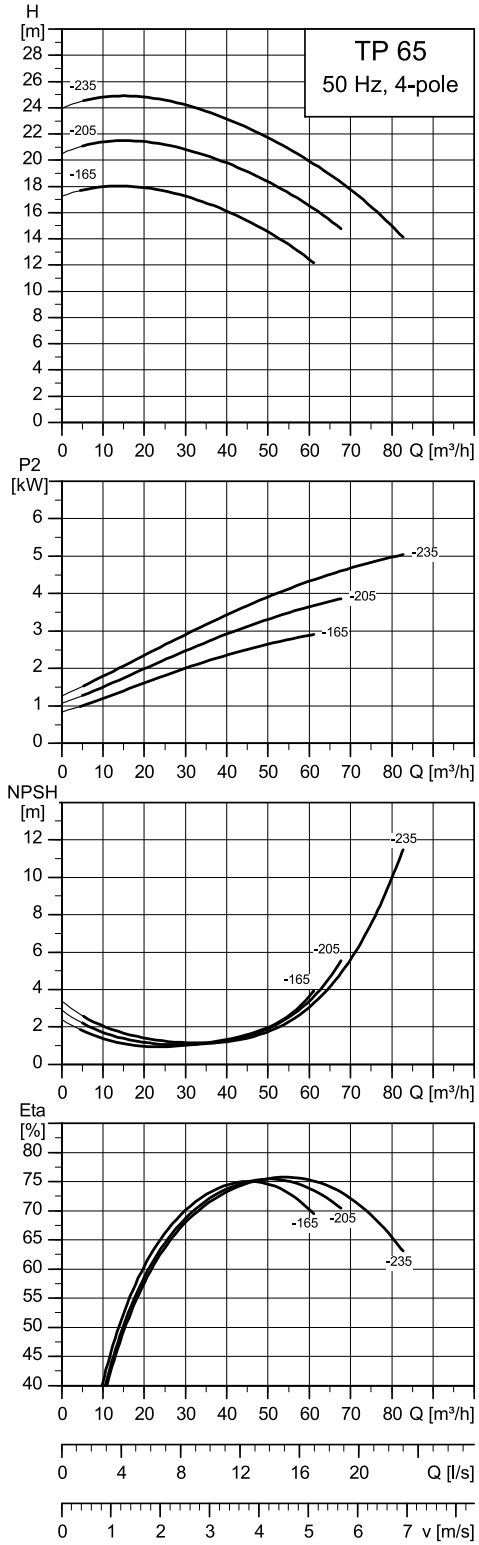

TM088581

Note: All curves apply to single-head pumps. For further information, see section Curve conditions.

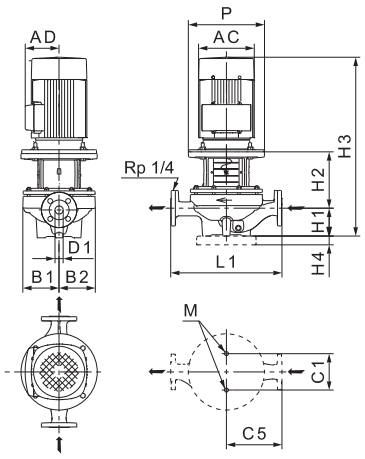

TP 65			-95/4	-125/4	-155/4	-165/4	-175/4	-205/4	-235/4
Series			300	300	300	300	300	300	300
IEC size	1~ TP		-	-	-	-	-	-	-
	3~ TP		90	90	100	100	100	112	132
P2	1~/3~ TP	[kW]	-/1.1	-/1.5	-/2.2	-/3	-/3	-/4	-/5.5
PN			PN 16	PN 16	PN 16	PN 16	PN 16	PN 16	PN 16
T_{min};T_{max}		[°C]	[-25;120]	[-25;120]	[-25;120]	[-25;120]	[-25;120]	[-25;120]	[-25;120]
D1		[mm]	65	65	65	65	65	65	65
AC	1~/3~ TP	[mm]	-/175	-/175	-/199	-/199	-/199	-/222	-/260
AD	1~/3~ TP	[mm]	-/143	-/145	-/159	-/159	-/159	-/169	-/193
P		[mm]	200	200	250	250	250	250	300
B1		[mm]	185	185	185	203	185	203	203
B2		[mm]	169	169	169	179	169	179	179
C1		[mm]	144	144	144	230	144	230	230
C5		[mm]	250	250	250	275	250	275	275
L1		[mm]	475	475	475	550	475	550	550
H1		[mm]	125	125	125	130	125	130	130
H2		[mm]	153	153	181	173.5	181	173.5	212.5
H3	1~/3~ TP	[mm]	-/552	-/581	-/619	-/661.5	-/664	-/623.5	-/737.5
H4		[mm]	-	-	-	-	-	-	-
M			M16	M16	M16	M16	M16	M16	M16

TP 80-XX/4

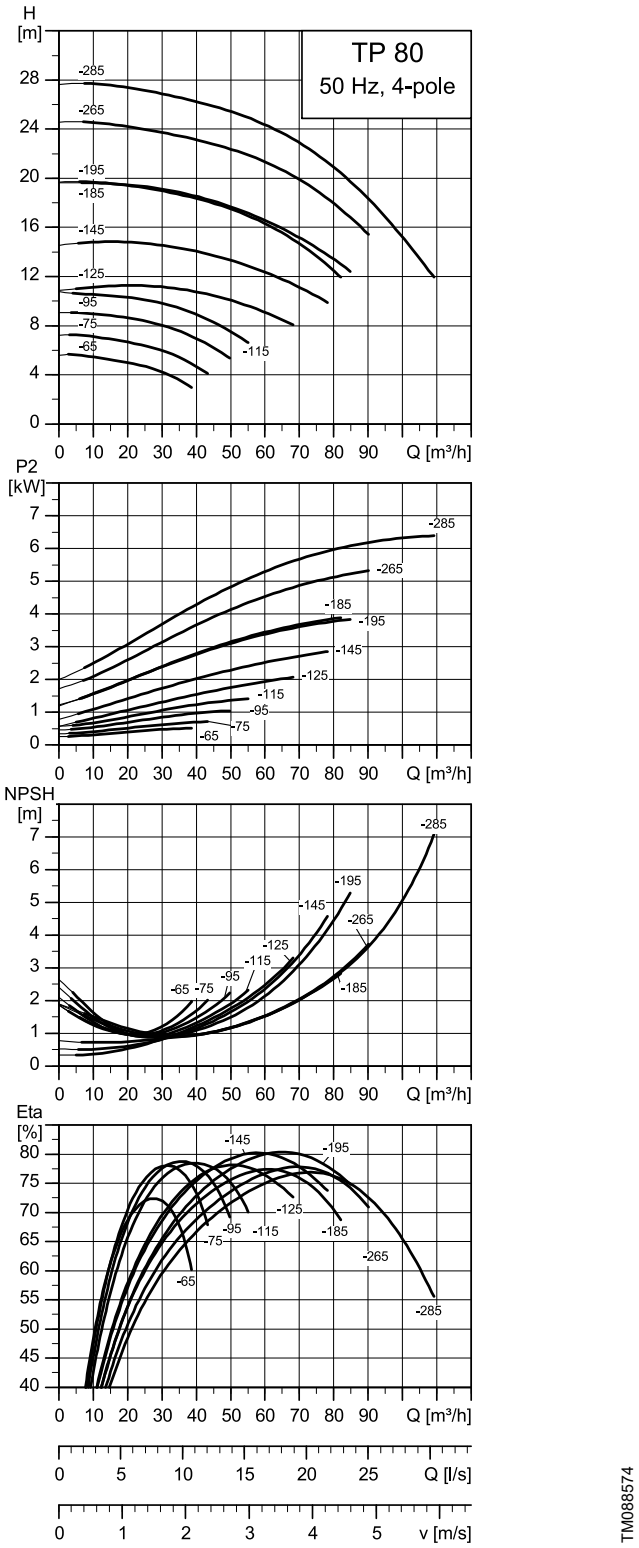

Note: All curves apply to single-head pumps. For further information, see section Curve conditions.

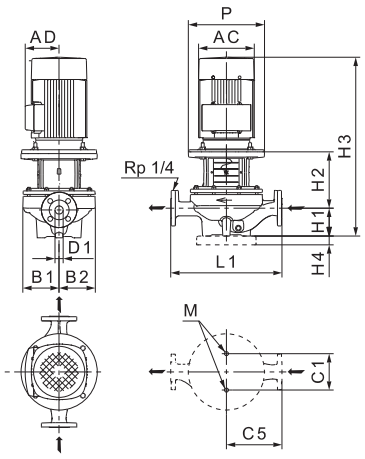

TM028632

TP 80			-65/4	-75/4	-95/4	-115/4	-125/4	-145/4	-185/4	-195/4	-265/4	-285/4
Series			300	300	300	300	300	300	300	300	300	300
IEC size	1~ TP		-	-	-	-	-	-	-	-	-	-
	3~ TP		80	80	90	90	100	100	112	112	132	132
P2	1~/3~ TP	[kW]	-/0.55	-/0.75	-/1.1	-/1.5	-/2.2	-/3	-/4	-/4	-/5.5	-/7.5
PN			PN 16	PN 16	PN 16	PN 16	PN 16	PN 16	PN 16	PN 16	PN 16	PN 16
Tmin;Tmax		[°C]	[-25;120]	[-25;120]	[-25;120]	[-25;120]	[-25;120]	[-25;120]	[-25;120]	[-25;120]	[-25;120]	[-25;120]
D1		[mm]	80	80	80	80	80	80	80	80	80	80
AC	1~/3~ TP	[mm]	-/157	-/157	-/175	-/175	-/199	-/199	-/222	-/222	-/260	-/260
AD	1~/3~ TP	[mm]	-/124	-/124	-/143	-/145	-/159	-/159	-/169	-/169	-/193	-/193
P		[mm]	200	200	200	200	250	250	250	250	200	200
B1		[mm]	156	156	156	156	197	197	215	197	215	215
B2		[mm]	125	125	125	125	170	170	184	170	184	184
C1		[mm]	144	144	144	144	230	230	230	230	230	230
C5		[mm]	230	230	230	230	300	300	340	300	340	340
L1		[mm]	440	440	440	440	550	550	620	550	620	620
H1		[mm]	115	115	115	115	140	140	150	140	150	150
H2		[mm]	172.5	172.5	172.5	172.5	192.5	192.5	223	192.5	243	243
H3	1~/3~ TP	[mm]	-/542.5	-/577.5	-/561.5	-/590.5	-/645.5	-/690.5	-/693	-/652.5	-/788	-/826
H4		[mm]	-	-	-	-	-	-	-	-	-	-
M			M16	M16	M16	M16	M16	M16	M16	M16	M16	M16

TP 80-XX/4

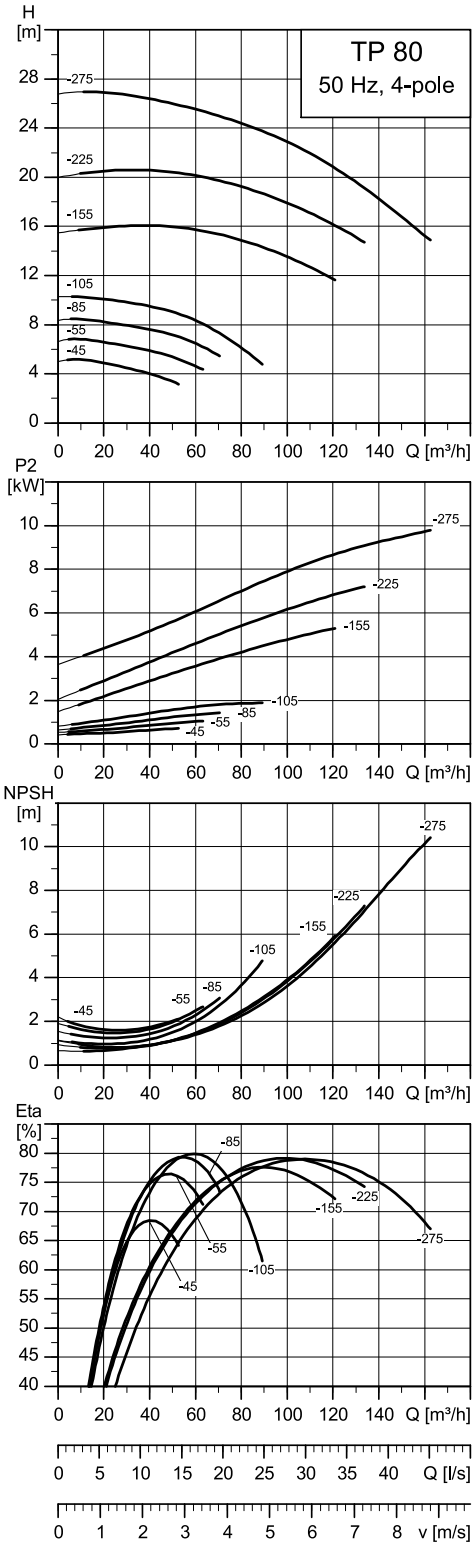

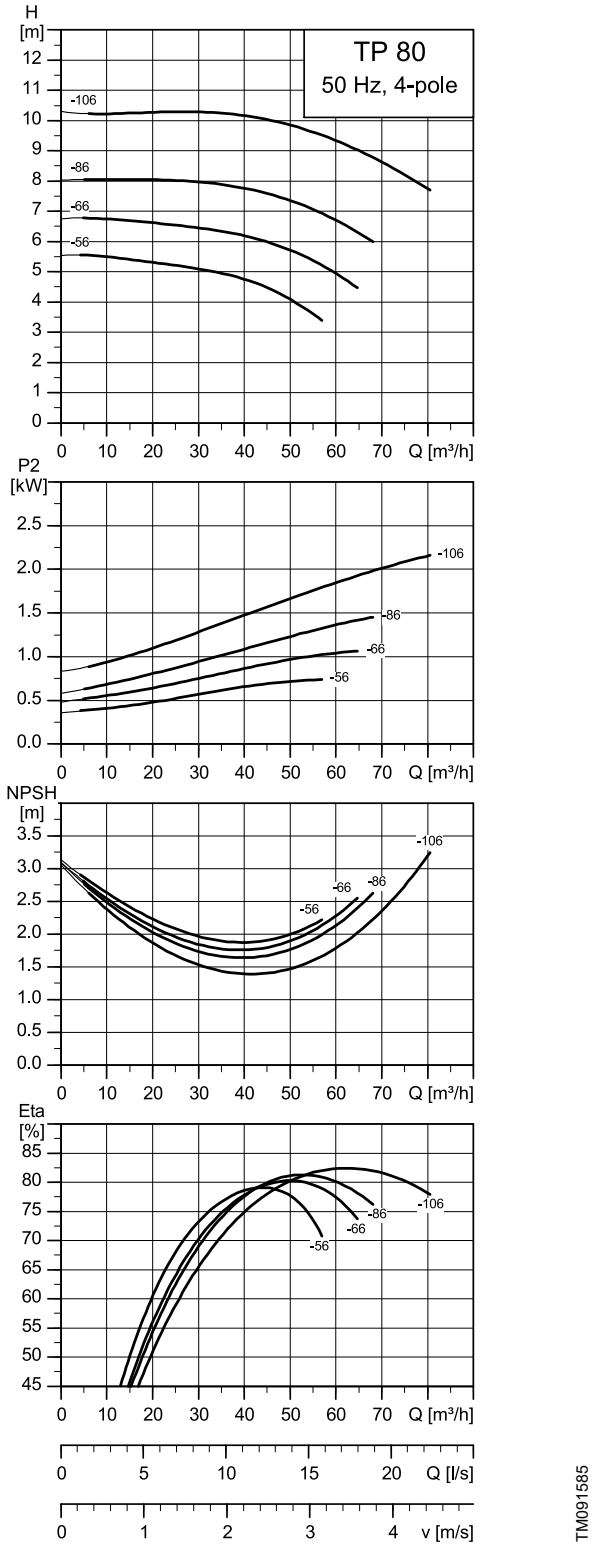

Note: All curves apply to single-head pumps. For further information, see section Curve conditions.

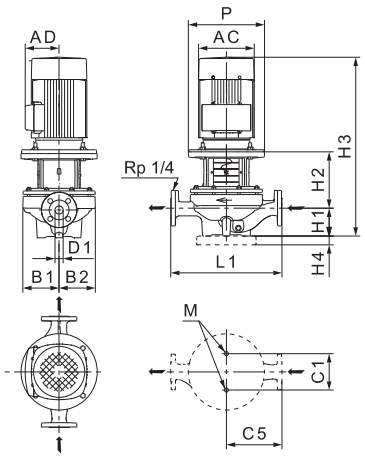

TM028632

TP 80			-45/4	-55/4	-56/4	-66/4	-85/4	-86/4	-105/4	-106/4	-155/4	-225/4	-275/4
Series			300	300	300	300	300	300	300	300	300	300	300
IEC size	1~ TP		-	-	-	-	-	-	-	-	-	-	-
	3~ TP		80	90	80	90	90	90	100	100	132	132	160
P2	1~/3~ TP	[kW]	-/0.75	-/1.1	-/0.75	-/1.1	-/1.5	-/1.5	-/2.2	-/2.2	-/5.5	-/7.5	-/11
PN			PN 16	PN 16	PN 16	PN 16	PN 16	PN 16	PN 16	PN 16	PN 16	PN 16	PN 16
Tmin;Tmax		[°C]	[-25;120]	[-25;120]	[-25;120]	[-25;120]	[-25;120]	[-25;120]	[-25;120]	[-25;120]	[-25;120]	[-25;120]	[-25;120]
D1		[mm]	80	80	80	80	80	80	80	80	80	80	80
AC	1~/3~ TP	[mm]	-/157	-/175	-/175	-/195	-/175	-/195	-/199	-/230	-/260	-/260	-/314
AD	1~/3~ TP	[mm]	-/124	-/143	-/150	-/160	-/145	-/160	-/159	-/185	-/193	-/193	-/240
P		[mm]	200	200	200	200	200	200	250	250	300	200	200
B1		[mm]	180	180	179	179	180	179	180	179	225	225	225
B2		[mm]	134	134	130	130	134	130	134	130	186	186	186
C1		[mm]	144	144	144	144	144	144	144	144	230	230	230
C5		[mm]	227	227	220	220	227	220	227	220	345	345	345
L1		[mm]	440	440	440	440	440	440	440	440	620	620	620
H1		[mm]	140	140	115	115	140	115	140	115	140	140	140
H2		[mm]	172.5	172.5	168	168	172.5	168	192.5	196	243	243	273
H3	1~/3~ TP	[mm]	-/602.5	-/590.5	-/548	-/581	-/615.5	-/611	-/645.5	-/661	-/778	-/816	-/918
H4		[mm]	-	-	-	-	-	-	-	-	-	-	35
M			M16	M16	M16	M16	M16	M16	M16	M16	M16	M16	M16

TP 100-XXX/4

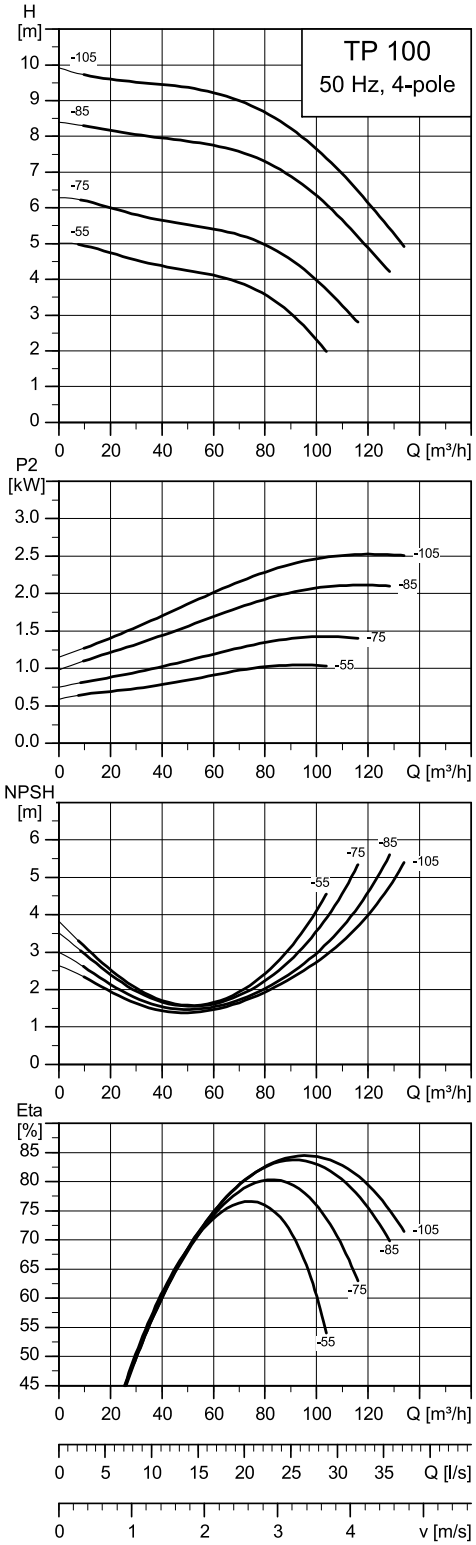

TM088585

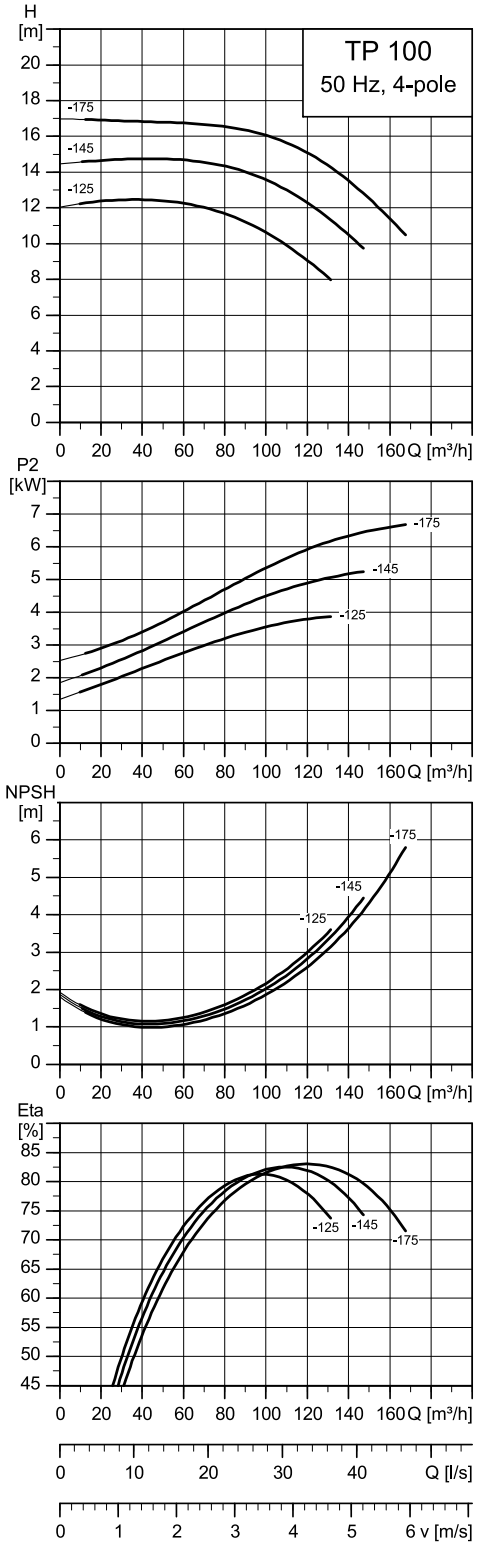

TM088583

Note: All curves apply to single-head pumps. For further information, see section Curve conditions.

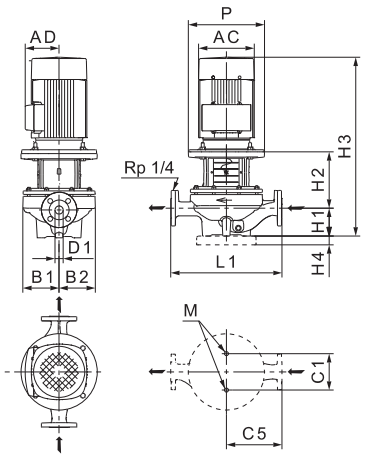

TM028632

TP 100			-55/4	-75/4	-85/4	-105/4	-125/4	-145/4	-175/4
Series			300	300	300	300	300	300	300
IEC size	1~ TP		-	-	-	-	-	-	-
	3~ TP		90	90	100	100	112	132	132
P2	1~/3~ TP	[kW]	-/1.1	-/1.5	-/2.2	-/3	-/4	-/5.5	-/7.5
PN			PN 16	PN 16	PN 16	PN 16	PN 16	PN 16	PN 16
T_{min};T_{max}		[°C]	[-25;120]	[-25;120]	[-25;120]	[-25;120]	[-25;120]	[-25;120]	[-25;120]
D1		[mm]	100	100	100	100	100	100	100
AC	1~/3~ TP	[mm]	-/175	-/175	-/199	-/199	-/222	-/260	-/260
AD	1~/3~ TP	[mm]	-/143	-/145	-/159	-/159	-/169	-/193	-/193
P		[mm]	200	200	250	250	250	300	300
B1		[mm]	201	201	201	201	220	220	220
B2		[mm]	145	145	145	145	191	191	191
C1		[mm]	230	230	230	230	230	230	230
C5		[mm]	300	300	300	300	390	390	390
L1		[mm]	550	550	550	550	670	670	670
H1		[mm]	140	140	140	140	170	170	170
H2		[mm]	164.5	164.5	192.5	192.5	228	248	248
H3	1~/3~ TP	[mm]	-/578.5	-/607.5	-/645.5	-/690.5	-/718	-/813	-/851
H4		[mm]	-	-	-	-	-	-	-
M			M16	M16	M16	M16	M16	M16	M16

TP 100-XXX/4

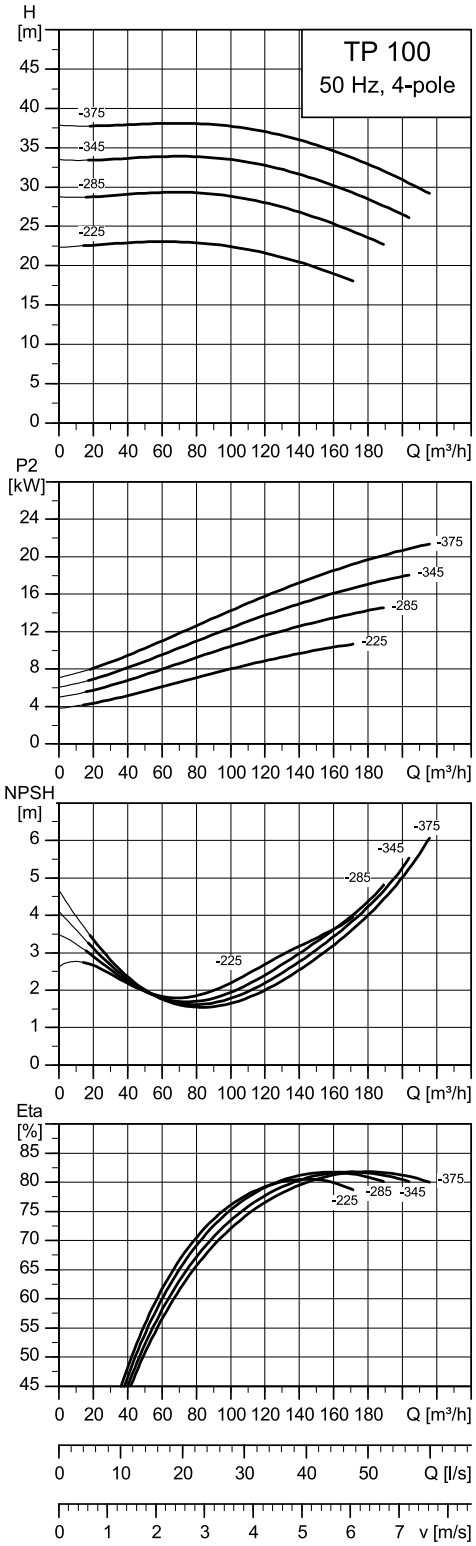

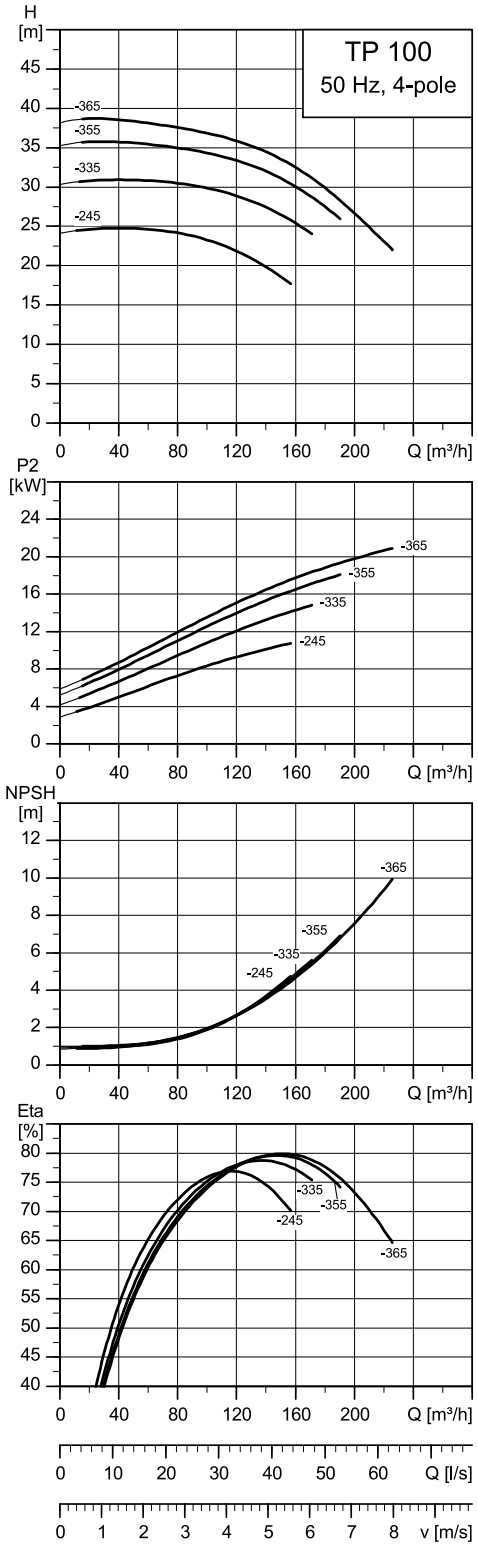

Note: All curves apply to single-head pumps. For further information, see section Curve conditions.

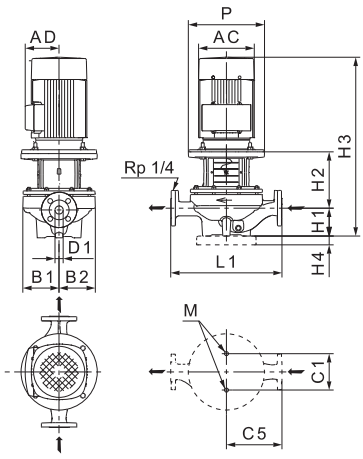

TM028632

TP 100			-225/4	-245/4	-285/4	-335/4	-345/4	-355/4	-365/4	-375/4
Series			300	300	300	300	300	300	300	300
IEC size	1~ TP		-	-	-	-	-	-	-	-
	3~ TP		160	160	160	160	180	180	180	180
P2	1~/3~ TP	[kW]	-/11	-/11	-/15	-/15	-/18.5	-/18.5	22	-/22
PN			PN 16	PN 16	PN 16	PN 16	PN 16	PN 16	PN 16	PN 16
T_{min};T_{max}		[°C]	[-25;120]	[-25;120]	[-25;120]	[-25;120]	[-25;120]	[-25;120]	[-25;120]	[-25;120]
D1		[mm]	100	100	100	100	100	100	100	100
AC	1~/3~ TP	[mm]	-/314	-/314	-/314	-/314	-/355	-/355	-/355	-/355
AD	1~/3~ TP	[mm]	-/240	-/240	-/240	-/240	-/255	-/255	-/255	-/255
P		[mm]	350	350	350	350	350	350	350	350
B1		[mm]	271	262	271	262	271	262	262	271
B2		[mm]	224	220	224	220	224	220	220	224
C1		[mm]	230	230	230	230	230	230	230	230
C5		[mm]	335	335	335	335	335	335	335	335
L1		[mm]	670	670	670	670	670	670	670	670
H1		[mm]	175	173	175	173	175	173	173	175
H2		[mm]	305	273	305	273	305	273	273	305
H3	1~/3~ TP	[mm]	-/985	-/951	-/1029	-/995	-/1060	-/1021	-/1064	-/1098
H4		[mm]	35	35	35	35	35	35	35	35
M			M16	M16	M16	M16	M16	M16	M16	M16

TP 125-XXX/4

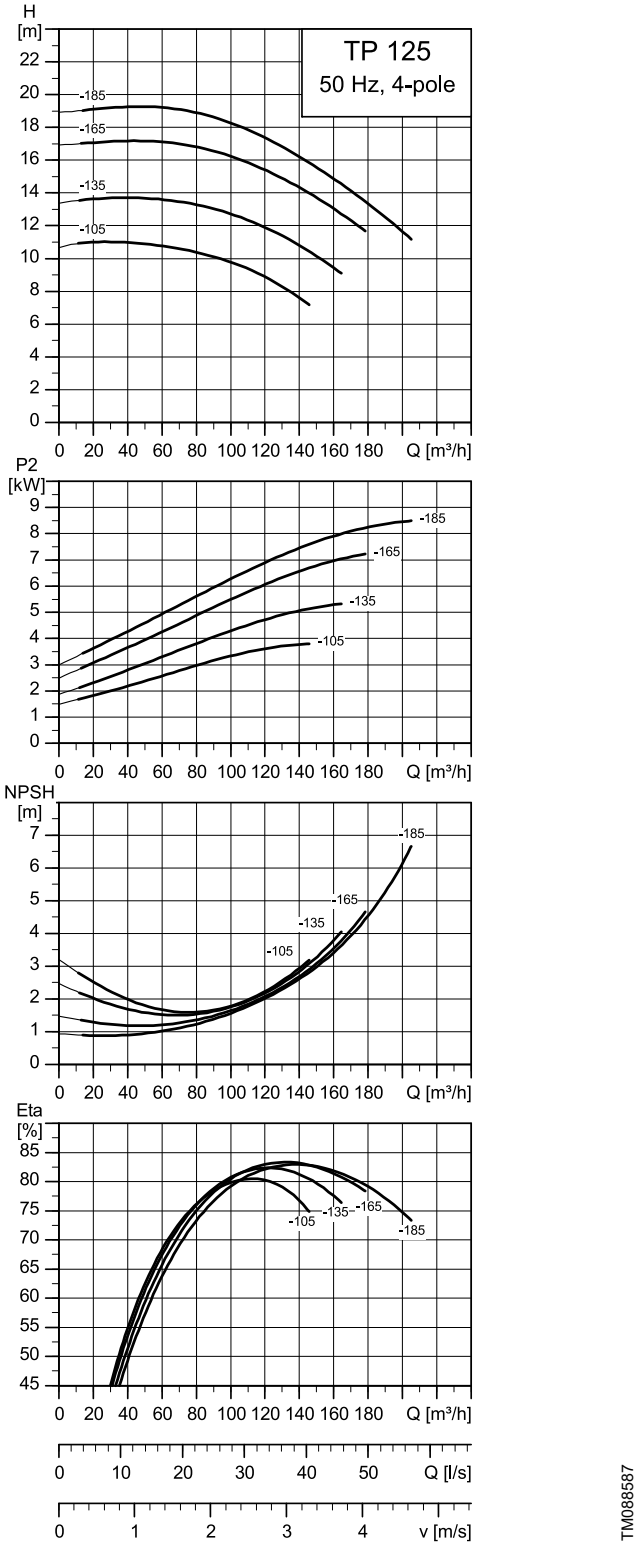

Note: All curves apply to single-head pumps. For further information, see section Curve conditions.

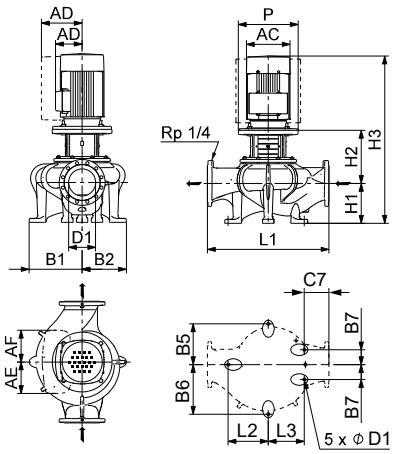

TM086748

TP 125			-105/4	-135/4	-165/4	-185/4
Series			300	300	300	300
IEC size	1~ TP		-	-	-	-
	3~ TP		112	132	132	160
P2	1~/3~ TP	[kW]	-/4	-/5.5	-/7.5	-/11
PN			PN 16	PN 16	PN 16	PN 16
T_{min};T_{max}		[°C]	[-25;120]	[-25;120]	[-25;120]	[-25;120]
D1		[mm]	125	125	125	125
AC	1~/3~ TP	[mm]	-/222	-/260	-/260	-/314
AD	1~/3~ TP	[mm]	-/169	-/193	-/193	-/240
P		[mm]	250	300	300	350
B1		[mm]	247	247	247	247
B2		[mm]	193	193	193	193
C7		[mm]	144	144	144	144
L1		[mm]	620	620	620	620
H1		[mm]	210	210	210	210
H2		[mm]	228	248	248	278
H3	1~/3~ TP	[mm]	-/758	-/853	-/891	-/993
H4		[mm]	-	-	-	-
Ø D1		[mm]	18	18	18	18

TP 125-XXX/4

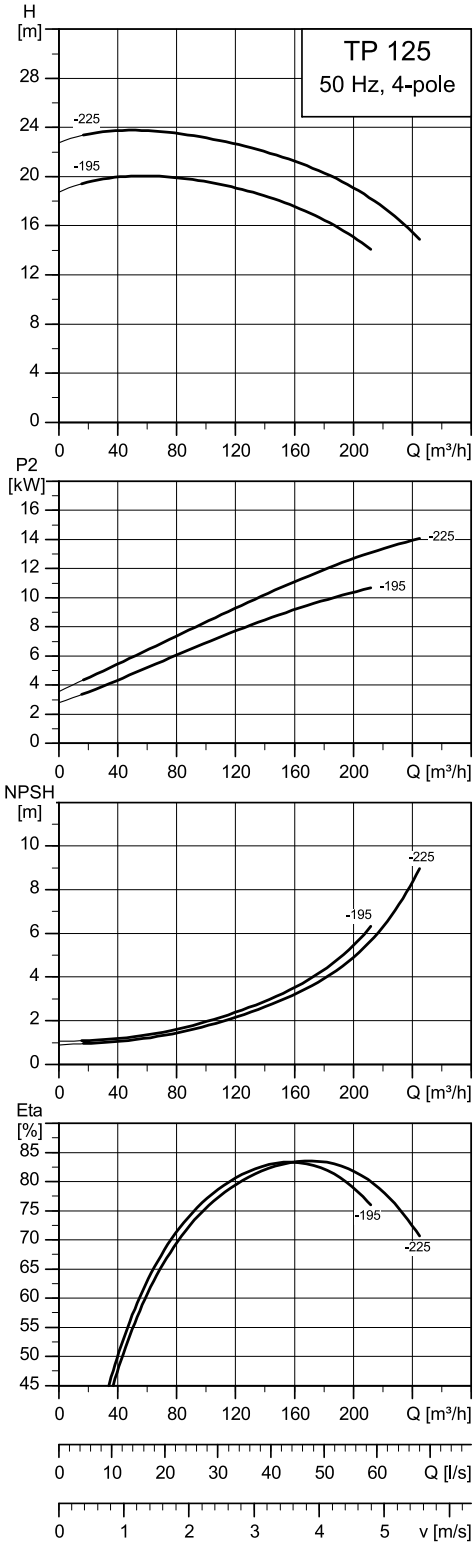

TM088588

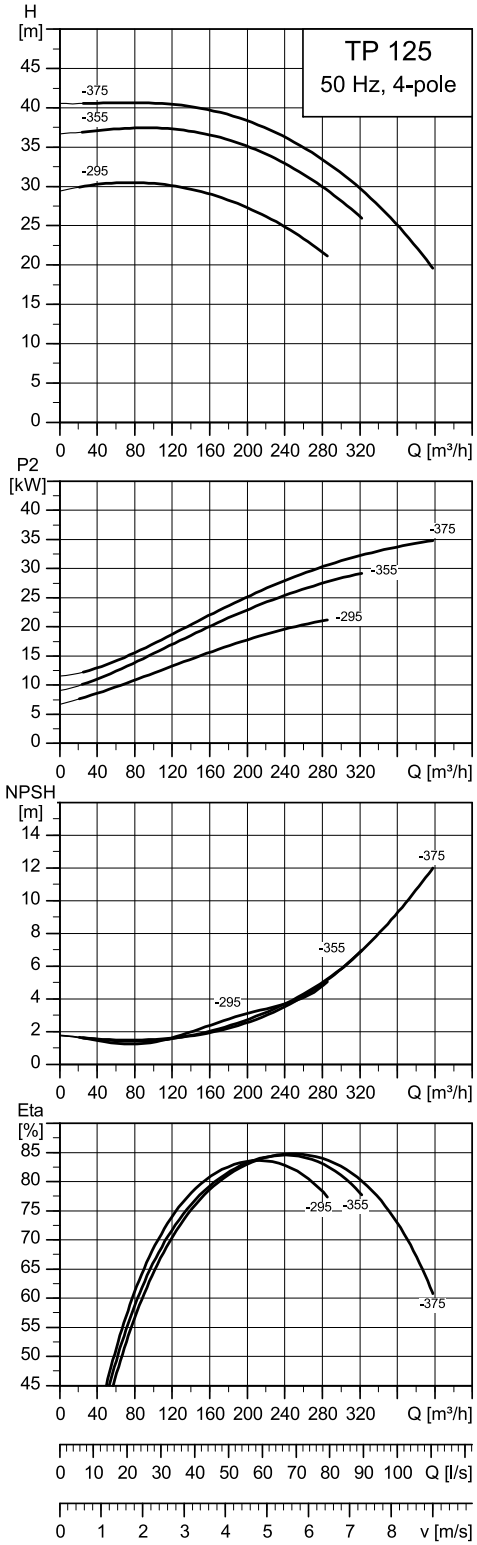

TM088589

Note: All curves apply to single-head pumps. For further information, see section Curve conditions.

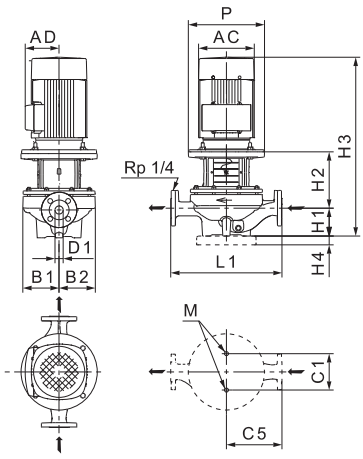

TM028632

TP 125			-195/4	-225/4	-295/4	-355/4	-375/4
Series			300	300	300	300	300
IEC size	1~ TP		-	-	-	-	-
	3~ TP		160	160	180	200	225
P2	1~/3~ TP	[kW]	-/11	-/15	-/22	-/30	-/37
PN			PN 16	PN 16	PN 16	PN 16	PN 16
T_{min};T_{max}		[°C]	[-25;120]	[-25;120]	[-25;120]	[-25;120]	[-25;120]
D1		[mm]	125	125	125	125	125
AC	1~/3~ TP	[mm]	-/314	-/314	-/355	-/404.5	-/445
AD	1~/3~ TP	[mm]	-/240	-/240	-/255	-/302	-/325
P		[mm]	350	350	350	400	450
B1		[mm]	250	250	286	286	286
B2		[mm]	192	192	225	225	225
C1		[mm]	230	230	230	230	230
C5		[mm]	350	350	400	400	400
L1		[mm]	670	670	800	800	800
H1		[mm]	215	215	235	235	235
H2		[mm]	312.5	312.5	271	271	301
H3	1~/3~ TP	[mm]	-/1032.5	-/1076.5	-/1124	-/1173	-/1213
H4		[mm]	35	35	35	35	35
M			M16	M16	M16	M16	M16

TP 150-XXX/4

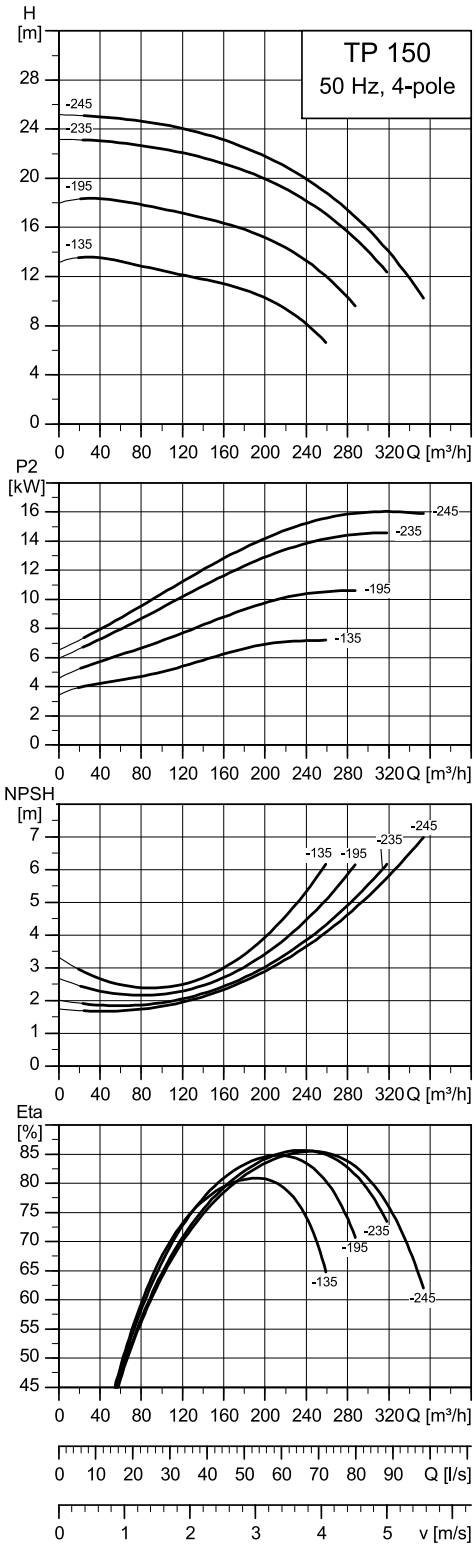

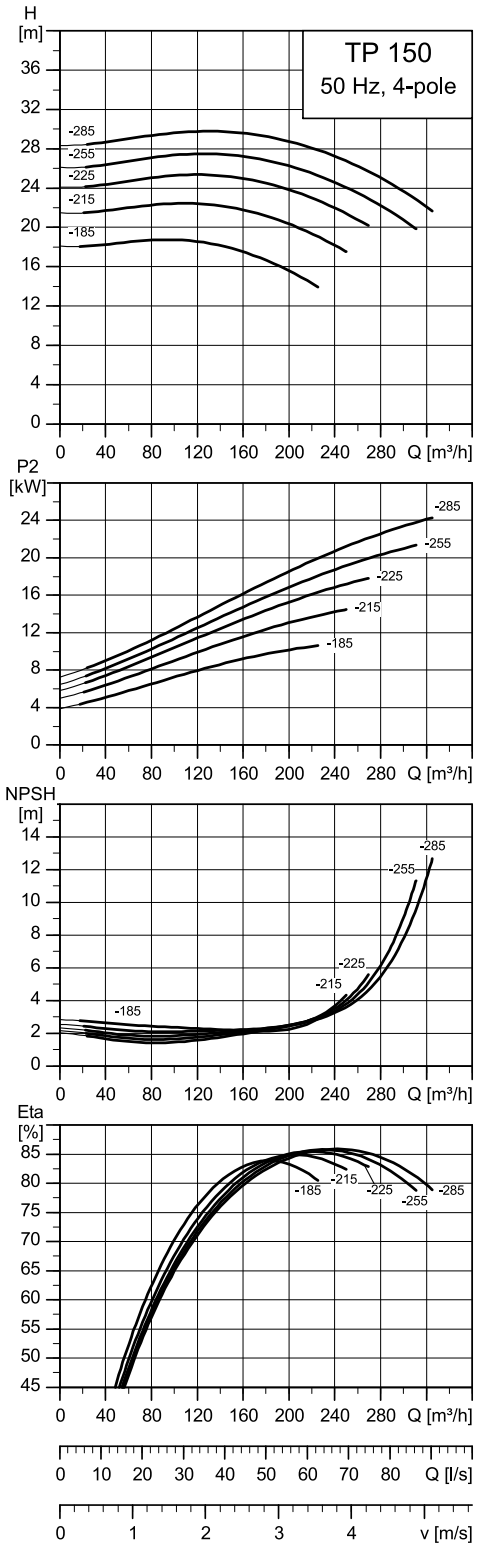

Note: All curves apply to single-head pumps. For further information, see section Curve conditions.

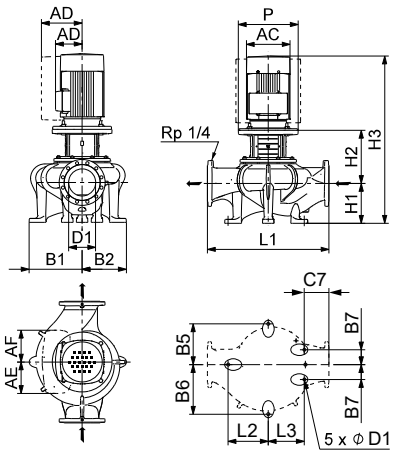

TM086748

TP 150			-135/4	-185/4	-195/4	-215/4	-225/4	-235/4	-245/4	-255/4	-285/4
Series			300	300	300	300	300	300	300	300	300
IEC size	1~ TP		-	-	-	-	-	-	-	-	-
	3~ TP		132	160	160	160	180	160	180	180	200
P2	1~/3~ TP	[kW]	-/7.5	-/11	-/11	-/15	-/18.5	-/15	-/18.5	-/22	-/30
PN			PN 16	PN 16	PN 16	PN 16	PN 16	PN 16	PN 16	PN 16	PN 16
Tmin;Tmax		[°C]	[-25;120]	[-25;120]	[-25;120]	[-25;120]	[-25;120]	[-25;120]	[-25;120]	[-25;120]	[-25;120]
D1		[mm]	150	150	150	150	150	150	150	150	150
AC	1~/3~ TP	[mm]	-/260	-/314	-/314	-/314	-/355	-/314	-/355	-/355	-/404.5
AD	1~/3~ TP	[mm]	-/193	-/240	-/240	-/240	-/255	-/240	-/255	-/255	-/302
P		[mm]	300	350	350	350	350	350	350	350	400
B1		[mm]	278	279	278	279	279	278	278	279	279
B2		[mm]	246	263	246	263	263	246	246	263	263
C7		[mm]	145	150	145	150	150	145	145	150	150
L1		[mm]	800	800	800	800	800	800	800	800	800
H1		[mm]	215	235	215	235	235	215	215	235	235
H2		[mm]	283	273	313	273	273	313	313	273	273
H3	1~/3~ TP	[mm]	-/931	-/1013	-/1033	-/1057	-/1088	-/1077	-/1108	-/1126	-/1175
H4		[mm]	-	-	-	-	-	-	-	-	-
∅ D1		[mm]	18	18	18	18	18	18	18	18	18

TP 150-XXX/4

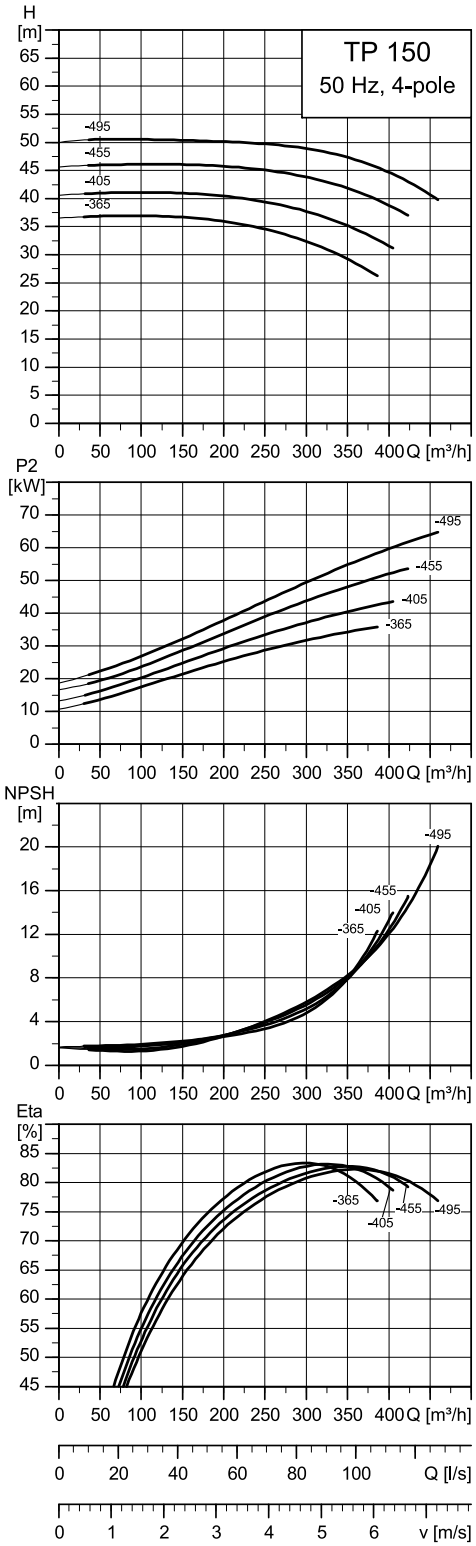

TM088592

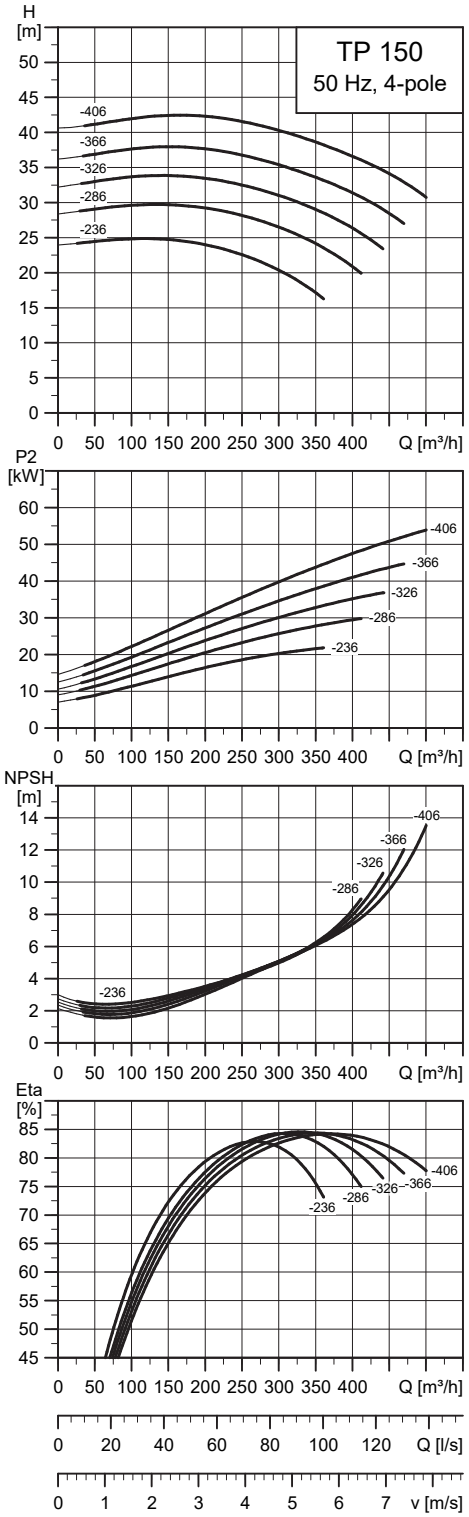

TM092118

Note: All curves apply to single-head pumps. For further information, see section Curve conditions.

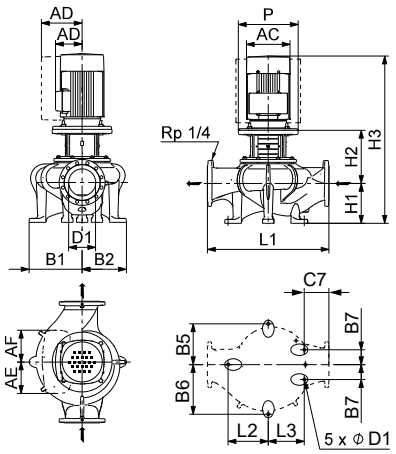

TM086748

TP 150			-236/4	-286/4	-326/4	-365/4	-366/4	-405/4	-406/4	-455/4	-495/4
Series			300	300	300	300	300	300	300	300	300
IEC size	1~ TP		-	-	-	-	-	-	-	-	-
	3~ TP		180	200	225	225	225	225	250	250	280
P2	1~/3~ TP	[kW]	-/22	-/30	-/37	-/37	-/45	-/45	-/55	-/55	-/75
PN			PN 16	PN 16	PN 16	PN 16	PN 16	PN 16	PN 16	PN 16	PN 16
T_{min}; T_{max}		[°C]	[-25;120]	[-25;120]	[-25;120]	[-25;120]	[-25;120]	[-25;120]	[-25;120]	[-25;120]	[-25;120]
D1		[mm]	150	150	150	150	150	150	150	150	150
AC	1~/3~ TP	[mm]	-/363	-/418	-/463	-/445	-/463	-/445	-/525	-/490	-/560
AD	1~/3~ TP	[mm]	-/275	-/322	-/325	-/325	-/325	-/325	-/385	-/364	-/400
P		[mm]	350	400	450	450	450	450	550	550	550
B1		[mm]	306	306	306	306	306	306	306	306	306
B2		[mm]	284	284	284	306	284	306	284	306	306
C7		[mm]	145	145	145	203	145	203	145	203	203
L1		[mm]	800	800	800	900	800	900	800	900	900
H1		[mm]	235	235	235	295	235	295	235	295	295
H2		[mm]	346	346	346	301	346	301	346	301	301
H3	1~/3~ TP	[mm]	-/1202	-/1303	-/1326	-/1273	-/1326	-/1298	-/1421	-/1366	-/1424
H4		[mm]	-	-	-	-	-	-	-	-	-
⌀ D1		[mm]	18	18	18	18	18	18	18	18	18

TP 200-XXX/4

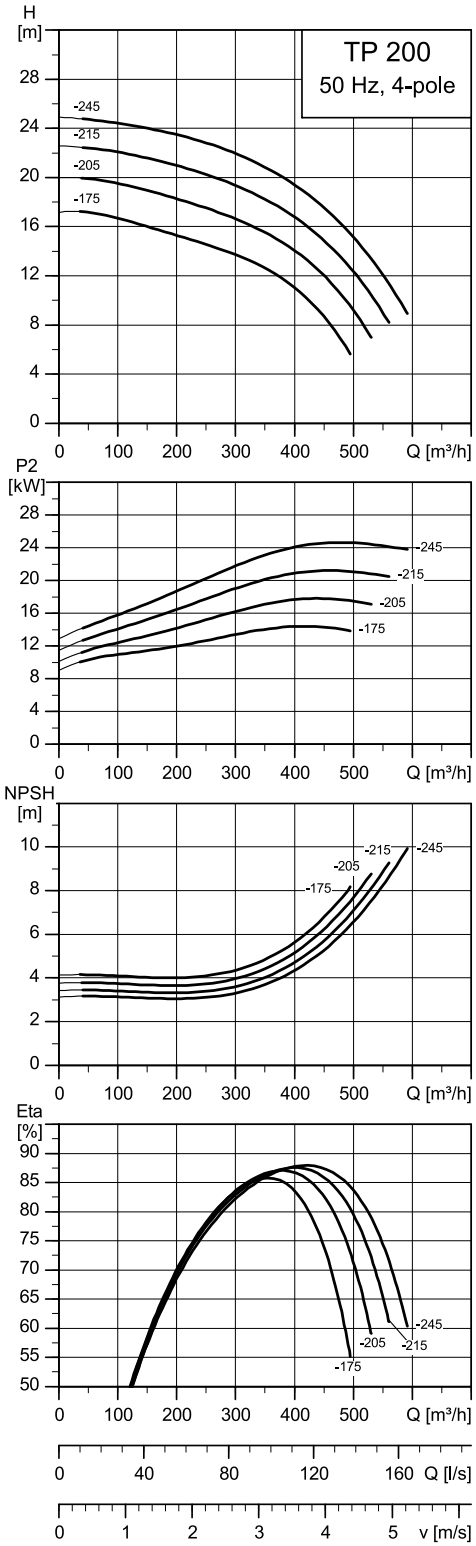

TM088610

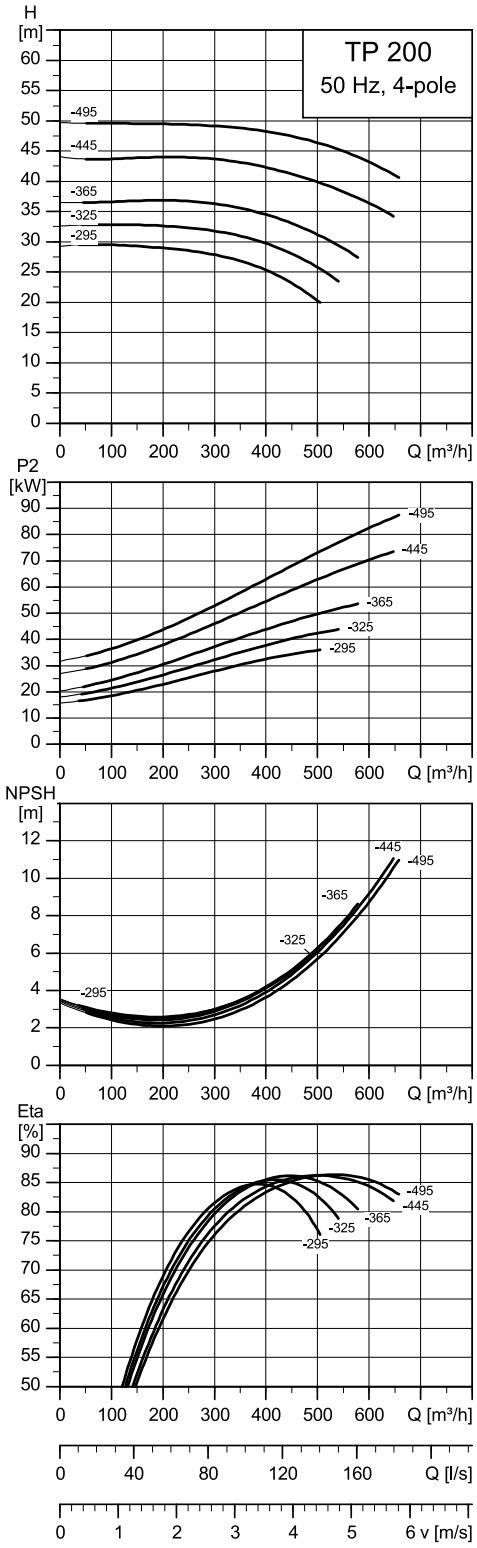

TM088611

Note: All curves apply to single-head pumps. For further information, see section Curve conditions.

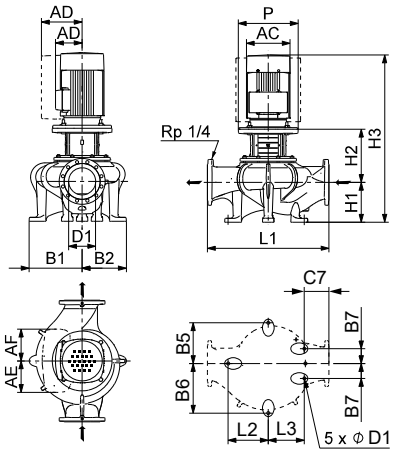

TM086748

TP 200			-175/4	-205/4	-215/4	-245/4	-295/4	-325/4	-365/4	-445/4	-495/4
Series			300	300	300	300	300	300	300	300	300
IEC size	1~ TP		-	-	-	-	-	-	-	-	-
	3~ TP		160	180	180	200	225	225	250	280	280
P2	1~/3~ TP	[kW]	-/15	-/18.5	-/22	-/30	-/37	-/45	-/55	-/75	-/90
PN			PN 16	PN 16	PN 16	PN 16	PN 16	PN 16	PN 16	PN 16	PN 16
T_{min};T_{max}		[°C]	[-25;120]	[-25;120]	[-25;120]	[-25;120]	[-25;120]	[-25;120]	[-25;120]	[-25;120]	[-25;120]
D1		[mm]	200	200	200	200	200	200	200	200	200
AC	1~/3~ TP	[mm]	-/314	-/355	-/355	-/404.5	-/445	-/445	-/490	-/560	-/556.5
AD	1~/3~ TP	[mm]	-/240	-/255	-/255	-/302	-/325	-/325	-/364	-/400	-/393
P		[mm]	350	350	350	400	450	450	550	550	550
B1		[mm]	327	327	327	327	337	337	337	337	337
B2		[mm]	271	271	271	271	289	289	289	289	289
B5		[mm]	240	240	240	240	260	260	260	260	260
B6		[mm]	240	240	240	240	260	260	260	260	260
B7		[mm]	75	75	75	75	100	100	100	100	100
C7		[mm]	245	245	245	245	183	183	183	183	183
L1		[mm]	900	900	900	900	900	900	900	900	900
H1		[mm]	280	280	280	280	295	295	295	295	295
H2		[mm]	331	331	331	331	321	321	321	321	321
H3	1~/3~ TP	[mm]	-/1160	-/1191	-/1229	-/1278	-/1293	-/1318	-/1386	-/1444	-/1496
H4		[mm]	-	-	-	-	-	-	-	-	-
∅ D1		[mm]	18	18	18	18	18	18	18	18	18

TP 200-XXX/4

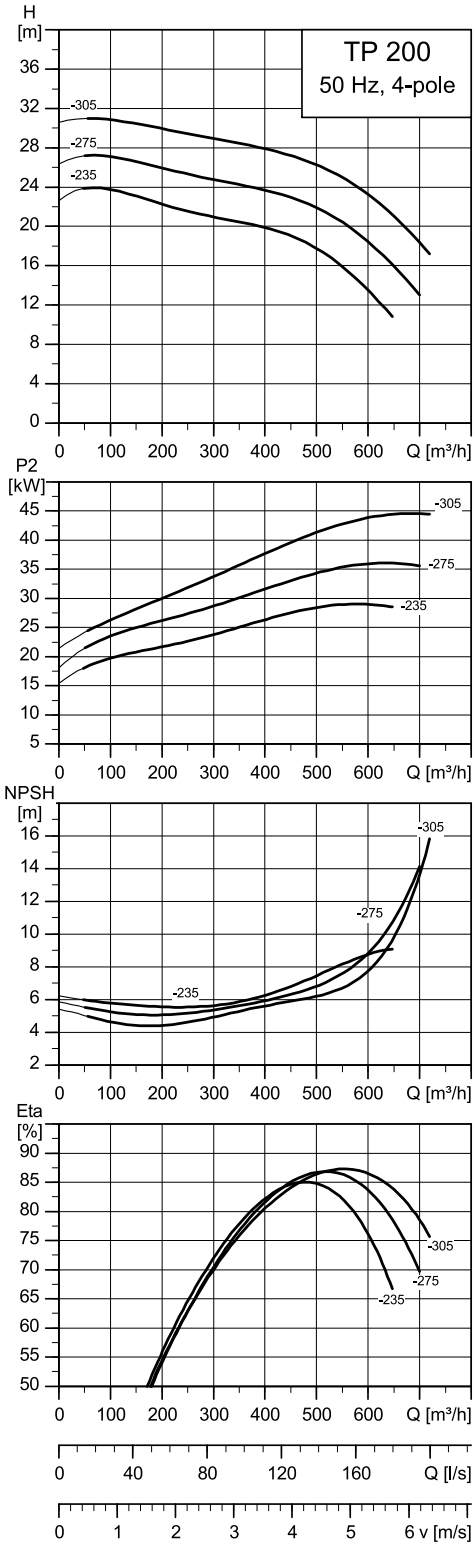

TM088613

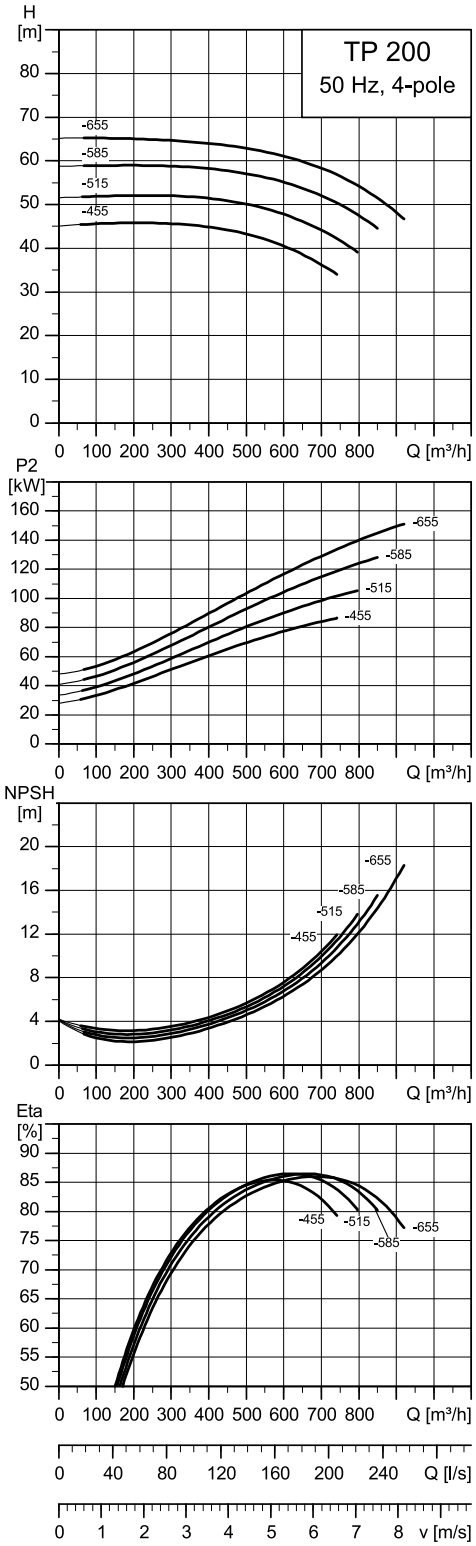

TM088612

Note: All curves apply to single-head pumps. For further information, see section Curve conditions.

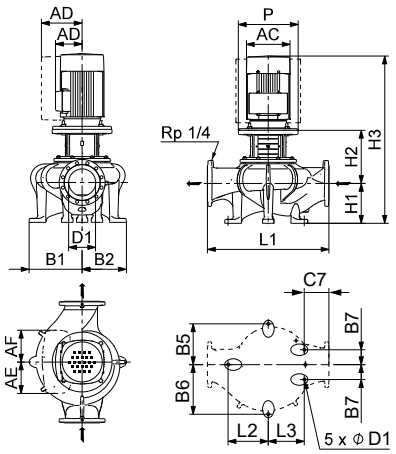

TM086748

TP 200			-235/4	-275/4	-305/4	-455/4	-515/4	-585/4	-655/4
Series			300	300	300	300	300	300	300
IEC size	1~ TP		-	-	-	-	-	-	-
	3~ TP		200	225	225	280	315	315	315
P2	1~/3~ TP	[kW]	-/30	-/37	-/45	-/90	-/110	-/132	-/160
PN			PN 16	PN 16	PN 16	PN 16	PN 16	PN 16	PN 16
Tmin;Tmax		[°C]	[-25;120]	[-25;120]	[-25;120]	[-25;120]	[-25;120]	[-25;120]	[-25;120]
D1		[mm]	200	200	200	200	200	200	200
AC	1~/3~ TP	[mm]	-/404.5	-/445	-/445	-/556.5	-/631	-/631	-/631
AD	1~/3~ TP	[mm]	-/302	-/325	-/325	-/393	-/483	-/483	-/483
P		[mm]	400	450	450	550	660	660	660
B1		[mm]	347	347	347	353	353	353	353
B2		[mm]	278	278	278	299	299	299	299
B5		[mm]	245	245	245	250	250	250	250
B6		[mm]	245	245	245	250	250	250	250
B7		[mm]	100	100	100	85	85	85	85
C7		[mm]	205	205	205	183	183	183	183
L1		[mm]	900	900	900	1000	1000	1000	1000
H1		[mm]	295	295	295	280	280	280	280
H2		[mm]	296	326	326	319	349	349	349
H3	1~/3~ TP	[mm]	-/1258	-/1298	-/1323	-/1479	-/1637	-/1747	-/1747
H4		[mm]	-	-	-	-	-	-	-
∅ D1		[mm]	18	18	18	18	18	18	18

13. Minimum efficiency index

Minimum efficiency index, MEI, means the dimensionless scale unit for hydraulic pump efficiency at best efficiency point, part load and overload. The Commission Regulation, EU, sets efficiency requirements to MEI greater than or equal to 0.10 as from 1 January 2013 and MEI greater than or equal to 0.40 as from 1 January 2015. An indicative benchmark for the best-performing water pump available on the market as from 1 January 2013 is determined in the regulation.

- The benchmark for the most efficient water pumps is MEI greater than or equal to 0.70.
- The efficiency of a pump with a trimmed impeller is usually lower than that of a pump with the full impeller diameter. The trimming of the impeller will adapt the pump to a fixed duty point, leading to reduced energy consumption. The minimum efficiency index, MEI, is based on the full impeller diameter.
- The operation of this water pump with variable duty points may be more efficient and economic when controlled, for example, by the use of a variable-speed drive that matches the pump duty to the system.
- Information on benchmark efficiency is available at http://europump.eu/efficiencycharts.

TP, 2-pole, PN 16

TP Series 300, 2-pole	P2 [kW]	Nominal impeller size / actual impeller size	Trimmed impeller	Maximum impeller	MEI
TP 40-205/2	1.5	32-180/124	•		≥0.7
TP 40-245/2	2.2	32-180/136	•		≥0.7
TP 40-305/2	3	32-180/149	•		≥0.7
TP 40-355/2	4	32-180/161	•		≥0.7
TP 40-425/2	5.5	32-180/177		•	≥0.7
TP 50-155/2	1.1	32-130/110	•		≥0.7
TP 50-195/2	1.5	32-130/121	•		≥0.7
TP 50-235/2	2.2	32-130/133	•		≥0.7
TP 50-245/2	4	40-180/135	•		≥0.7
TP 50-275/2	3	32-130/142		•	≥0.7
TP 50-305/2	5.5	40-180/151	•		≥0.7
TP 50-395/2	7.5	40-180/169	•		≥0.7
TP 50-405/2	11	40-190/171	•		≥0.7
TP 50-435/2	11	40-180/176		•	≥0.7
TP 50-515/2	15	40-190/192	•		≥0.7
TP 50-585/2	18.5	40-190/206		•	≥0.7
TP 50-655/2	15	40-225/212	•		≥0.7
TP 50-775/2	18.5	40-225/231	•		≥0.7
TP 50-885/2	22	40-225/246		•	≥0.7
TP 65-145/2	1.5	40-130/107	•		≥0.7
TP 65-185/2	2.2	40-130/121	•		≥0.7
TP 65-215/2	3	40-130/130	•		≥0.7
TP 65-255/2	4	40-130/139		•	≥0.7
TP 65-265/2	5.5	65-180.1/137	•		≥0.7
TP 65-325/2	7.5	65-180.1/151	•		≥0.7
TP 65-345/2	7.5	50-220/163	•		≥0.7
TP 65-415/2	11	65-180.1/168	•		≥0.7
TP 65-435/2	15	65-180.1/172		•	≥0.7
TP 65-445/2	11	50-220/182	•		≥0.7
TP 65-535/2	15	50-220/200	•		≥0.7
TP 65-615/2	18.5	50-220/213	•		≥0.7
TP 65-635/2	22	50-280/216	•		≥0.7
TP 65-675/2	22	50-220/221		•	≥0.7
TP 65-775/2	30	50-280/237	•		≥0.7
TP 65-945/2	37	50-280/262		•	≥0.7
TP 80-235/2	4	65-180/128	•		≥0.7

TP Series 300, 2-pole	P2 [kW]	Nominal impeller size / actual impeller size	Trimmed impeller	Maximum impeller	MEI
TP 80-245/2	7.5	80-180.1/135	●		≥0.7
TP 80-265/2	5.5	65-180/138	●		≥0.7
TP 80-305/2	11	80-180.1/149	●		≥0.7
TP 80-315/2	11	80-180/153	●		≥0.7
TP 80-335/2	7.5	65-180/153	●		≥0.7
TP 80-385/2	15	80-180.1/162	●		≥0.7
TP 80-395/2	11	65-180/167	●		≥0.7
TP 80-405/2	15	80-180/171		●	≥0.7
TP 80-425/2	15	65-180/172		●	≥0.7
TP 80-435/2	18.5	80-180.1/172		●	≥0.7
TP 80-455/2	18.5	65-225/187	●		≥0.7
TP 80-535/2	22	65-225/201	●		≥0.7
TP 80-625/2	30	65-210/209	●		≥0.7
TP 80-715/2	30	65-225/230	●		≥0.7
TP 80-725/2	37	65-210/225		●	≥0.7
TP 80-795/2	37	65-225/242		●	≥0.7
TP 100-225/2	11	100-180/137	●		≥0.7
TP 100-295/2	15	100-180/152	●		≥0.7
TP 100-345/2	18.5	100-180/163	●		≥0.7
TP 100-385/2	22	100-180/172		●	≥0.7
TP 100-455/2	30	80-225.1/188	●		≥0.7
TP 100-515/2	37	80-225.1/197	●		≥0.7
TP 100-585/2	45	80-225.1/207	●		≥0.7
TP 100-675/2	55	80-225.1/222-216		●	≥0.7
TP 125-230/2	15	100-160.1/141	●		≥0.7
TP 125-270/2	18.5	100-160.1/149	●		≥0.7
TP 125-350/2	30	100-160.1/170	●		≥0.7
TP 125-475/2	37	100-225.1/191	●		≥0.7
TP 125-535/2	45	100-225.1/201	●		≥0.7
TP 125-605/2	55	100-225.1/212	●		≥0.7
TP 125-745/2	75	100-225.1/234-232		●	≥0.7

TP, 4-pole, PN 16

TP Series 300, 4-pole	P2 [kW]	Nominal impeller size / actual impeller size	Trimmed impeller	Maximum impeller	MEI
TP 40-75/4	0.37	32-180/151	●		≥0.7
TP 40-95/4	0.55	32-180/168	●		≥0.7
TP 40-105/4	0.75	32-180/177		●	≥0.7
TP 50-65/4	0.55	40-180/143	●		≥0.7
TP 50-85/4	0.75	40-180/158	●		≥0.7
TP 50-95/4	1.1	40-190/163	●		≥0.7
TP 50-105/4	1.1	40-180/174		●	≥0.7
TP 50-115/4	1.1	40-225/181	●		≥0.7
TP 50-125/4	1.5	40-190/180	●		≥0.7
TP 50-135/4	1.5	40-225/198	●		≥0.7
TP 50-145/4	2.2	40-190/206		●	≥0.7
TP 50-185/4	2.2	40-225/224	●		≥0.7
TP 50-225/4	3	40-225/250		●	≥0.7
TP 65-55/4	0.55	65-180.1/129	●		≥0.7
TP 65-75/4	0.75	65-180.1/142	●		≥0.7
TP 65-85/4	1.1	65-180.1/160	●		≥0.7
TP 65-95/4	1.1	50-220/171	●		≥0.7

TP Series 300, 4-pole	P2 [kW]	Nominal impeller size / actual impeller size	Trimmed impeller	Maximum impeller	MEI
TP 65-105/4	1.5	65-180.1/172		●	≥0.7
TP 65-125/4	1.5	50-220/187	●		≥0.7
TP 65-155/4	2.2	50-220/211	●		≥0.7
TP 65-165/4	3	50-280/224	●		≥0.7
TP 65-175/4	3	50-220/221		●	≥0.7
TP 65-205/4	4	50-280/243	●		≥0.7
TP 65-235/4	5.5	50-280/262		●	≥0.7
TP 80-45/4	0.75	80-180/125	●		≥0.7
TP 80-55/4	1.1	80-180/142	●		≥0.7
TP 80-56/4	0.75	80-180.1/129	●		≥0.7
TP 80-65/4	0.55	65-180/128	●		≥0.7
TP 80-66/4	1.1	80-180.1/142	●		≥0.7
TP 80-75/4	0.75	65-180/145	●		≥0.7
TP 80-85/4	1.5	80-180/158	●		≥0.7
TP 80-86/4	1.5	80-180.1/153	●		≥0.7
TP 80-95/4	1.1	65-180/160	●		≥0.7
TP 80-105/4	2.2	80-180/174		●	≥0.7
TP 80-106/4	2.2	80-180.1/171		●	≥0.7
TP 80-115/4	1.5	65-180/172		●	≥0.7
TP 80-125/4	2.2	65-225/182	●		≥0.7
TP 80-145/4	3	65-225/208	●		≥0.7
TP 80-185/4	4	65-280/236	●		≥0.7
TP 80-195/4	4	65-225/241		●	≥0.7
TP 80-225/4	7.5	80-280/240	●		≥0.7
TP 80-265/4	5.5	65-280/263	●		≥0.7
TP 80-275/4	11	80-280/278-270		●	≥0.7
TP 80-285/4	7.5	65-280/280		●	≥0.7
TP 100-55/4	1.1	100-180/130	●		≥0.7
TP 100-75/4	1.5	100-180/143	●		≥0.7
TP 100-85/4	2.2	100-180/162	●		≥0.7
TP 100-105/4	3	100-180/174		●	≥0.7
TP 100-125/4	4	80-225.1/192	●		≥0.7
TP 100-145/4	5.5	80-225.1/210-202	●		≥0.7
TP 100-175/4	7.5	80-225.1/222-216		●	≥0.7
TP 100-225/4	11	100-350/256	●		≥0.7
TP 100-245/4	11	80-350/261	●		≥0.7
TP 100-285/4	15	100-350/288	●		≥0.7
TP 100-335/4	15	80-350/292	●		≥0.7
TP 100-345/4	18.5	100-350/309	●		≥0.7
TP 100-355/4	18.5	80-350/315	●		≥0.7
TP 100-365/4	22	80-350/328		●	≥0.7
TP 100-375/4	22	100-350/327		●	≥0.7
TP 125-105/4	4	100-225.1/181	●		≥0.7
TP 125-135/4	5.5	100-225.1/199	●		≥0.7
TP 125-165/4	7.5	100-225.1/221	●		≥0.7
TP 125-185/4	11	100-225.1/234-232		●	≥0.7
TP 125-195/4	11	100-280/233	●		≥0.7
TP 125-225/4	15	100-280/256		●	≥0.7
TP 125-295/4	22	125-350/289	●		≥0.7
TP 125-355/4	30	125-350/318	●		≥0.7
TP 125-375/4	37	125-350/333-329		●	≥0.7
TP 150-135/4	7.5	125-280/202	●		≥0.7
TP 150-185/4	11	125-320/234	●		≥0.7
TP 150-195/4	11	125-280/232	●		≥0.7

TP Series 300, 4-pole	P2 [kW]	Nominal impeller size / actual impeller size	Trimmed impeller	Maximum impeller	MEI
TP 150-215/4	15	125-320/253	●		≥0.7
TP 150-225/4	18.5	125-320/266	●		≥0.7
TP 150-235/4	15	125-280/259	●		≥0.7
TP 150-236/4	22	125-355/264	●		≥0.7
TP 150-245/4	18.5	125-280/270		●	≥0.7
TP 150-255/4	22	125-320/276	●		≥0.7
TP 150-285/4	30	125-320/288		●	≥0.7
TP 150-286/4	30	125-355/286	●		≥0.7
TP 150-326/4	37	125-355/302	●		≥0.7
TP 150-365/4	37	125-360/316	●		≥0.7
TP 150-366/4	45	125-355/317	●		≥0.7
TP 150-405/4	45	125-360/332	●		≥0.7
TP 150-406/4	55	125-355/334		●	≥0.7
TP 150-455/4	55	125-360/350	●		≥0.7
TP 150-495/4	75	125-360/364		●	≥0.7
TP 200-175/4	15	150-280/232	●		≥0.7
TP 200-205/4	18.5	150-280/247	●		≥0.7
TP 200-215/4	22	150-280/261	●		≥0.7
TP 200-225/4	22	150-350.1/261	●		≥0.7
TP 200-235/4	30	200-300/269	●		≥0.7
TP 200-245/4	30	150-280/273		●	≥0.7
TP 200-275/4	37	200-300/285	●		≥0.7
TP 200-285/4	30	150-350.1/287	●		≥0.7
TP 200-295/4	37	150-360/292-286	●		≥0.7
TP 200-305/4	45	200-300/304		●	≥0.7
TP 200-325/4	45	150-360/306-300	●		≥0.7
TP 200-335/4	37	150-350.1/305	●		≥0.7
TP 200-365/4	55	150-360/321-315	●		≥0.7
TP 200-385/4	45	150-350.1/326-324		●	≥0.7
TP 200-445/4	75	150-360/344-338	●		≥0.7
TP 200-455/4	90	150-390/352	●		≥0.7
TP 200-495/4	90	150-360/368-362		●	≥0.7
TP 200-515/4	110	150-390/374	●		≥0.7
TP 200-585/4	132	150-390/396	●		≥0.7
TP 200-655/4	160	150-390/415		●	≥0.7

14. Accessories

Counter-flanges

A flange kit consists of two steel flanges, two gaskets of asbestos-free material IT 200, and the requisite number of bolts.

Counter-flange	Pump type	Description	Rated pressure	Pipe connection	Product number
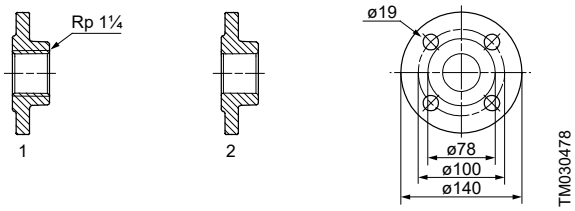	TP 32	Threaded	16 bar, EN 1092-2	Rp 1 1/4	539703
		For welding	16 bar, EN 1092-2	32 mm, nominal	539704

Pos.	Description
1	Threaded
2	For welding

Counter-flange	Pump type	Description	Rated pressure	Pipe connection	Product number
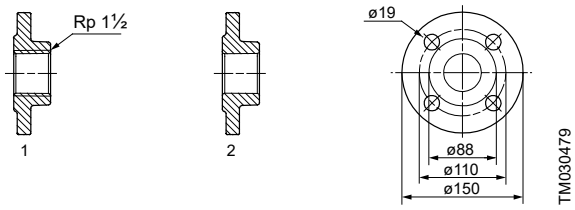	TP 40	Threaded	16 bar, EN 1092-2	Rp 1 1/2	539701
		For welding	16 bar, EN 1092-2	40 mm, nominal	539702

Pos.	Description
1	Threaded
2	For welding

Counter-flange	Pump type	Description	Rated pressure	Pipe connection	Product number
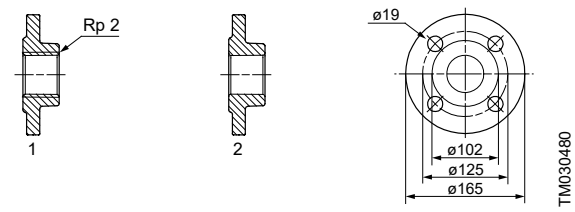	TP 50	Threaded	16 bar, EN 1092-2	Rp 2	549801
		For welding	16 bar, EN 1092-2	50 mm, nominal	549802

Pos.	Description
1	Threaded
2	For welding

Counter-flange	Pump type	Description	Rated pressure	Pipe connection	Product number
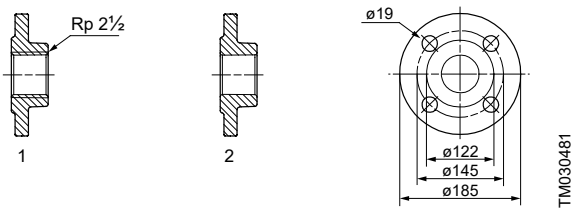	TP 65	Threaded	16 bar, EN 1092-2	Rp 2 1/2	559801
		For welding	16 bar, EN 1092-2	65 mm, nominal	559802

Pos.	Description
1	Threaded
2	For welding

Counter-flange	Pump type	Description	Rated pressure	Pipe connection	Product number
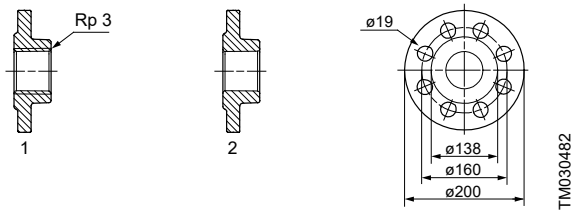	**TP 80**	Threaded	16 bar, EN 1092-2	Rp 3	569802
		For welding	16 bar, EN 1092-2	80 mm, nominal	569801
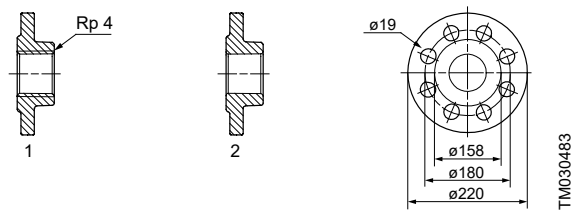	**TP 100**	Threaded	16 bar, EN 1092-2	Rp 4	99558423
		For welding	16 bar, EN 1092-2	100 mm, nominal	579802
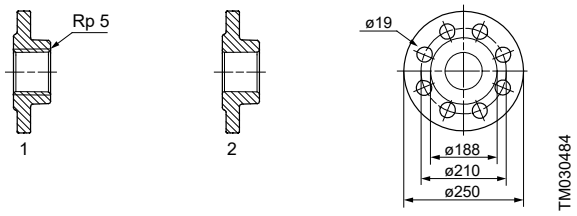	**TP 125**	Threaded	16 bar, EN 1092-2	Rp 5	485367
		For welding	16 bar, EN 1092-2	125 mm, nominal	485368
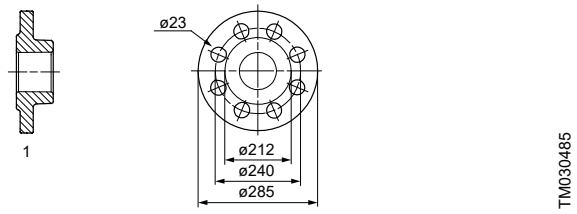	**TP 150**	For welding	16 bar, EN 1092-2	150 mm, nominal	S1111600

Pos.	Description
1	Threaded
2	For welding

Pos.	Description
1	Threaded
2	For welding

Pos.	Description
1	Threaded
2	For welding

Pos.	Description
1	For welding

Adapter flanges for various port-to-port lengths

DN	Height (H) [mm]	Diameter, D [mm]	Pitch-circle diameter, D1 [mm]	Adapter flange	Product number
		PN 10/16	PN 10/16		PN 10/16
32	1 × 220	-	100		98848069
	1 × 120	-	100		98387530
	1 × 60	78	-		98387528
	1 × 30	78	-		98387588
40	1 × 70	-	110		539721
	1 × 90	-	110		98387591
	1 × 190	-	110		98387593
50	1 × 160	-	125		98387595
	1 × 60	-	125		549824
	1 × 40	102	-		96608516
65	1 × 135	-	145		98391272
	1 × 20	122	-		98391274
80	1 × 80	-	160		98391276
100	1 × 100	-	180		98391278

Base plates

Some of the TP Series 300 pumps are provided with mounting feet and cannot be supplied with a base plate. See the figure below.

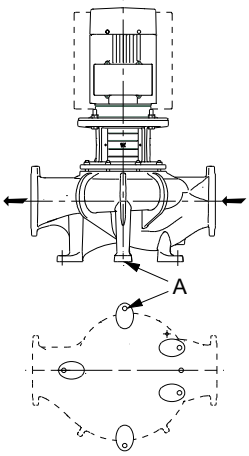

Principal sketch of a Series 300 pump designed with mounting feet (A)

TP Series 300

Pump type	Hexagon head screws	Product number
TP 50-405/2	2 × M16 × 30 mm	00485031
TP 50-435/2		
TP 50-515/2		
TP 50-585/2		
TP 50-655/2		
TP 50-775/2		
TP 50-885/2		
TP 65-415/2		
TP 65-435/2		
TP 65-445/2		
TP 65-535/2		
TP 65-615/2		
TP 65-675/2		
TP 80-305/2		
TP 80-315/2		
TP 80-385/2		
TP 80-395/2		
TP 80-405/2		
TP 80-425/2		
TP 80-435/2		
TP 80-625/2		
TP 80-725/2		

Drawing	Product number
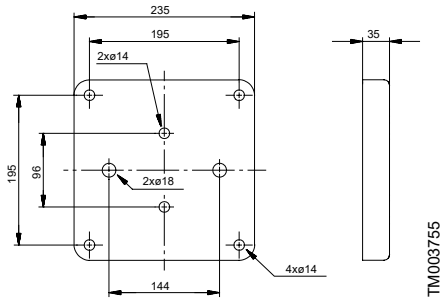	00485031

TP Series 300

Pump type	Hexagon head screws	Product number
TP 65-945/2	2 × M16 × 30 mm	96536246
TP 65-775/2		
TP 65-635/2		
TP 80-795/2		
TP 80-715/2		
TP 80-535/2		
TP 80-455/2		
TP 100-675/2		
TP 100-585/2		
TP 100-515/2		
TP 100-455/2		
TP 80-275/4		
TP 100-365/4		
TP 100-355/4		
TP 100-335/4		
TP 100-245/4		
TP 100-385/2		
TP 100-345/2		
TP 100-295/2		
TP 100-225/2		
TP 125-225/4		
TP 125-195/4		
TP 100-375/4		
TP 100-345/4		
TP 100-285/4		
TP 100-225/4		
TP 125-375/4		
TP 125-355/4		
TP 125-295/4		

Drawing	Product number
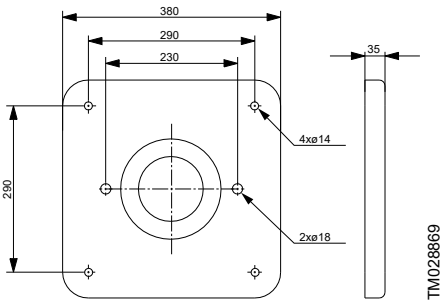	96536246

15. Minimum inlet pressure - NPSH

To ensure optimum and noiseless operation, we recommend that you use the minimum inlet pressure values shown in sections TP 2-pole, PN 16 to TP 6-pole, PN 16.

A minimum inlet pressure is required to avoid pressure drop that may cause cavitation.

Use the following formula to calculate the minimum inlet pressure, p_s in bar relative. The pressure gauge value on the pump inlet side.

Note: Base the calculation of the minimum inlet pressure on the maximum required flow.

$$p_S \geq \left(\mathrm{NPSH}_R \times \rho \times g - \frac{1}{2} \times \rho \times c^2\right) \times 0.00001 - p_b + p_d$$

[bar relative]

p_s	=	Minimum inlet pressure in bar.
$NPSH_R$	=	The required Net Positive Suction Head in m head, to be read from the NPSH curve at the highest flow the pump will be delivering.
ρ	=	Density of the pumped liquid measured in kg/m^3.
g	=	Gravitational acceleration measured in m/s. For estimated calculations use the value 9.81 m/s^2.
c	=	Flow velocity of the pumped liquid at the pressure gauge. Insert the flow velocity as the unit [m/s]. See individual curve charts from section How to read the curve charts.
p_b	=	Barometric pressure in bar. Set the barometric pressure to 0.97 bar. **Note:** Only occasionally the pressure is as high as 1 bar; this value is also at sea level.
p_d	=	Vapour pressure in bar. See the figure below.

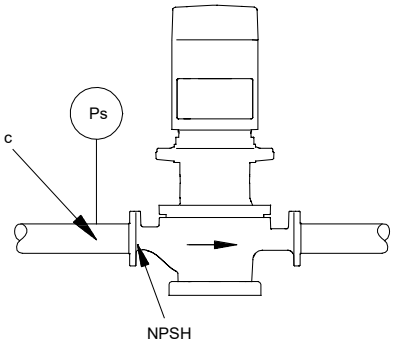

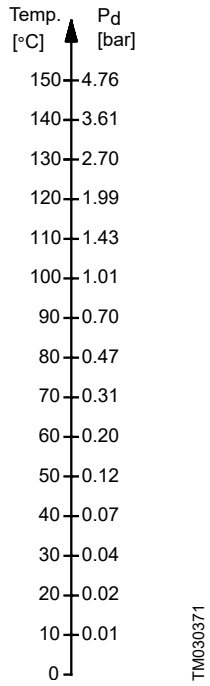

Minimum inlet pressure

TP, 2-pole, PN 16

Pump type	p [bar]						
	20 °C	60 °C	90 °C	110 °C	120 °C	140 °C	150 °C
TP 40-205/2	0.10	0.10	0.10	0.53	1.09	2.71	3.86
TP 40-245/2	0.10	0.10	0.10	0.59	1.14	2.76	3.91
TP 40-305/2	0.10	0.10	0.10	0.63	1.19	2.81	3.95
TP 40-355/2	0.10	0.10	0.10	0.68	1.24	2.85	4.00
TP 40-425/2	0.10	0.10	0.10	0.78	1.34	2.95	4.10
TP 50-155/2	0.10	0.10	0.10	0.55	1.11	2.72	3.87
TP 50-195/2	0.10	0.10	0.10	0.60	1.16	2.78	3.93
TP 50-235/2	0.10	0.10	0.10	0.73	1.29	2.91	4.05
TP 50-245/2	0.10	0.10	0.10	0.64	1.19	2.81	3.96
TP 50-275/2	0.10	0.10	0.26	0.98	1.54	3.15	4.30
TP 50-305/2	0.10	0.10	0.10	0.80	1.36	2.98	4.12
TP 50-395/2	0.10	0.10	0.35	1.07	1.62	3.23	4.38
TP 50-405/2	0.10	0.10	0.28	1.01	1.56	3.17	4.32
TP 50-435/2	0.10	0.26	0.74	1.46	2.01	3.61	4.75
TP 50-515/2	0.10	0.10	0.44	1.16	1.71	3.32	4.47
TP 50-585/2	0.10	0.10	0.51	1.23	1.79	3.39	4.54
TP 50-655/2	0.10	0.10	0.45	1.17	1.72	3.33	4.47
TP 50-775/2	0.10	0.10	0.57	1.29	1.84	3.45	4.59
TP 50-885/2	0.10	0.17	0.65	1.37	1.92	3.52	4.67
TP 65-145/2	0.10	0.10	0.13	0.85	1.41	3.02	4.17
TP 65-185/2	0.10	0.10	0.12	0.84	1.40	3.01	4.16
TP 65-215/2	0.10	0.10	0.21	0.94	1.49	3.11	4.25
TP 65-255/2	0.10	0.10	0.28	1.00	1.56	3.17	4.31
TP 65-265/2	0.10	0.10	0.20	0.92	1.48	3.09	4.24
TP 65-325/2	0.10	0.10	0.36	1.08	1.64	3.25	4.39
TP 65-345/2	0.10	0.10	0.18	0.90	1.46	3.07	4.22
TP 65-415/2	0.10	0.10	0.45	1.17	1.72	3.33	4.48
TP 65-435/2	0.10	0.10	0.52	1.24	1.79	3.40	4.54
TP 65-445/2	0.10	0.10	0.56	1.28	1.83	3.44	4.58
TP 65-535/2	0.10	0.23	0.72	1.43	1.98	3.59	4.73
TP 65-615/2	0.16	0.32	0.80	1.52	2.07	3.67	4.81
TP 65-635/2	0.10	0.10	0.30	1.02	1.58	3.19	4.33
TP 65-675/2	0.34	0.50	0.97	1.69	2.24	3.83	4.98
TP 65-775/2	0.10	0.10	0.57	1.29	1.84	3.44	4.59
TP 65-945/2	0.10	0.10	0.47	1.18	1.74	3.35	4.49
TP 80-235/2	0.10	0.10	0.10	0.74	1.30	2.92	4.06
TP 80-245/2	0.10	0.26	0.74	1.45	2.01	3.61	4.75
TP 80-265/2	0.10	0.10	0.10	0.80	1.36	2.97	4.12
TP 80-305/2	0.11	0.27	0.75	1.47	2.02	3.62	4.77
TP 80-315/2	0.10	0.13	0.61	1.33	1.88	3.49	4.63
TP 80-335/2	0.10	0.10	0.16	0.88	1.44	3.05	4.20
TP 80-385/2	0.10	0.25	0.73	1.45	2.00	3.60	4.75
TP 80-395/2	0.10	0.10	0.36	1.08	1.64	3.25	4.39
TP 80-405/2	0.10	0.27	0.75	1.46	2.02	3.62	4.76
TP 80-425/2	0.10	0.10	0.41	1.13	1.68	3.29	4.44
TP 80-435/2	0.10	0.18	0.67	1.38	1.94	3.54	4.68
TP 80-455/2	0.10	0.14	0.63	1.34	1.90	3.50	4.65
TP 80-535/2	0.12	0.29	0.77	1.48	2.03	3.64	4.78
TP 80-625/2	0.10	0.10	0.49	1.21	1.76	3.37	4.52
TP 80-715/2	0.34	0.50	0.98	1.69	2.24	3.84	4.98
TP 80-725/2	0.10	0.10	0.58	1.30	1.85	3.45	4.60
TP 80-795/2	0.39	0.55	1.03	1.74	2.29	3.88	5.03

Minimum inlet pressure - NPSH

Pump type	p [bar]						
	20 °C	60 °C	90 °C	110 °C	120 °C	140 °C	150 °C
TP 100-225/2	0.39	0.55	1.03	1.74	2.29	3.88	5.03
TP 100-295/2	0.43	0.59	1.06	1.77	2.32	3.92	5.06
TP 100-345/2	0.42	0.58	1.06	1.77	2.32	3.91	5.06
TP 100-385/2	0.32	0.48	0.96	1.67	2.22	3.82	4.96
TP 100-455/2	0.10	0.13	0.61	1.33	1.88	3.48	4.63
TP 100-515/2	0.10	0.21	0.69	1.40	1.96	3.56	4.70
TP 100-585/2	0.19	0.36	0.84	1.55	2.10	3.70	4.85
TP 100-675/2	0.22	0.38	0.86	1.57	2.12	3.72	4.87
TP 125-230/2	0.80	0.95	1.42	2.12	2.67	4.26	5.40
TP 125-270/2	0.66	0.81	1.28	1.99	2.54	4.13	5.27
TP 125-350/2	0.25	0.41	0.89	1.60	2.15	3.75	4.89
TP 125-475/2	0.23	0.39	0.87	1.58	2.13	3.73	4.88
TP 125-535/2	0.38	0.54	1.01	1.73	2.28	3.87	5.02
TP 125-605/2	0.43	0.59	1.07	1.78	2.33	3.92	5.07
TP 125-745/2	0.50	0.66	1.13	1.84	2.39	3.99	5.13

TP, 4-pole, PN 16

Pump type	p [bar]						
	20 °C	60 °C	90 °C	110 °C	120 °C	140 °C	150 °C
TP 40-75/4	0.10	0.10	0.10	0.57	1.12	2.74	3.89
TP 40-95/4	0.10	0.10	0.10	0.56	1.12	2.74	3.89
TP 40-105/4	0.10	0.10	0.10	0.61	1.17	2.78	3.93
TP 50-65/4	0.10	0.10	0.10	0.52	1.08	2.70	3.85
TP 50-85/4	0.10	0.10	0.10	0.56	1.12	2.74	3.89
TP 50-95/4	0.10	0.10	0.10	0.58	1.14	2.75	3.90
TP 50-105/4	0.10	0.10	0.10	0.61	1.17	2.78	3.93
TP 50-115/4	0.10	0.10	0.10	0.57	1.13	2.75	3.90
TP 50-125/4	0.10	0.10	0.10	0.60	1.16	2.77	3.92
TP 50-135/4	0.10	0.10	0.10	0.61	1.17	2.79	3.94
TP 50-145/4	0.10	0.10	0.10	0.67	1.23	2.84	3.99
TP 50-185/4	0.10	0.10	0.10	0.75	1.31	2.92	4.07
TP 50-225/4	0.10	0.10	0.25	0.97	1.53	3.14	4.29
TP 65-55/4	0.10	0.10	0.10	0.55	1.11	2.73	3.88
TP 65-75/4	0.10	0.10	0.10	0.59	1.15	2.76	3.91
TP 65-85/4	0.10	0.10	0.10	0.62	1.18	2.80	3.95
TP 65-95/4	0.10	0.10	0.10	0.60	1.16	2.78	3.93
TP 65-105/4	0.10	0.10	0.10	0.66	1.22	2.83	3.98
TP 65-125/4	0.10	0.10	0.10	0.68	1.23	2.85	4.00
TP 65-155/4	0.10	0.10	0.10	0.74	1.30	2.92	4.07
TP 65-165/4	0.10	0.10	0.10	0.69	1.25	2.86	4.01
TP 65-175/4	0.10	0.10	0.33	1.05	1.61	3.22	4.37
TP 65-205/4	0.10	0.10	0.10	0.83	1.38	3.00	4.15
TP 65-235/4	0.10	0.10	0.48	1.19	1.75	3.36	4.50
TP 80-45/4	0.10	0.10	0.10	0.63	1.18	2.80	3.95
TP 80-55/4	0.10	0.10	0.10	0.66	1.21	2.83	3.98
TP 80-56/4	0.10	0.10	0.10	0.62	1.18	2.80	3.95
TP 80-65/4	0.10	0.10	0.10	0.63	1.19	2.80	3.95
TP 80-66/4	0.10	0.10	0.10	0.64	1.20	2.81	3.96
TP 80-75/4	0.10	0.10	0.10	0.64	1.19	2.81	3.96
TP 80-85/4	0.10	0.10	0.10	0.68	1.24	2.85	4.00
TP 80-86/4	0.10	0.10	0.10	0.64	1.20	2.81	3.96
TP 80-95/4	0.10	0.10	0.10	0.64	1.19	2.81	3.96
TP 80-105/4	0.10	0.10	0.10	0.80	1.36	2.97	4.12
TP 80-106/4	0.10	0.10	0.10	0.67	1.23	2.84	3.99
TP 80-115/4	0.10	0.10	0.10	0.64	1.19	2.81	3.96
TP 80-125/4	0.10	0.10	0.10	0.71	1.27	2.88	4.03
TP 80-145/4	0.10	0.10	0.10	0.81	1.36	2.98	4.12
TP 80-155/4	0.10	0.10	0.10	0.80	1.36	2.97	4.12
TP 80-185/4	0.10	0.10	0.10	0.63	1.19	2.80	3.95
TP 80-195/4	0.10	0.10	0.14	0.86	1.42	3.03	4.18
TP 80-225/4	0.10	0.10	0.17	0.89	1.45	3.06	4.21
TP 80-265/4	0.10	0.10	0.10	0.73	1.29	2.91	4.06
TP 80-275/4	0.10	0.10	0.34	1.06	1.61	3.22	4.37
TP 80-285/4	0.10	0.10	0.16	0.88	1.44	3.05	4.20
TP 100-55/4	0.10	0.10	0.10	0.83	1.38	3.00	4.15
TP 100-75/4	0.10	0.10	0.16	0.89	1.44	3.06	4.21
TP 100-85/4	0.10	0.10	0.18	0.90	1.46	3.07	4.22
TP 100-105/4	0.10	0.10	0.15	0.87	1.43	3.04	4.19
TP 100-125/4	0.10	0.10	0.10	0.70	1.26	2.87	4.02
TP 100-145/4	0.10	0.10	0.10	0.75	1.31	2.92	4.07
TP 100-175/4	0.10	0.10	0.12	0.84	1.40	3.01	4.16

Pump type	p [bar]						
	20 °C	60 °C	90 °C	110 °C	120 °C	140 °C	150 °C
TP 100-225/4	0.10	0.10	0.10	0.66	1.22	2.83	3.98
TP 100-245/4	0.10	0.10	0.10	0.76	1.31	2.93	4.08
TP 100-285/4	0.10	0.10	0.10	0.70	1.26	2.87	4.02
TP 100-335/4	0.10	0.10	0.10	0.81	1.37	2.98	4.13
TP 100-345/4	0.10	0.10	0.10	0.73	1.29	2.91	4.05
TP 100-355/4	0.10	0.10	0.17	0.90	1.45	3.06	4.21
TP 100-365/4	0.10	0.10	0.37	1.09	1.65	3.26	4.40
TP 100-375/4	0.10	0.10	0.10	0.75	1.31	2.93	4.08
TP 125-105/4	0.10	0.10	0.10	0.72	1.28	2.90	4.05
TP 125-135/4	0.10	0.10	0.10	0.78	1.33	2.95	4.10
TP 125-165/4	0.10	0.10	0.10	0.82	1.38	2.99	4.14
TP 125-185/4	0.10	0.10	0.26	0.99	1.54	3.15	4.30
TP 125-195/4	0.10	0.10	0.23	0.95	1.50	3.12	4.26
TP 125-225/4	0.10	0.10	0.44	1.16	1.72	3.32	4.47
TP 125-295/4	0.10	0.10	0.10	0.74	1.30	2.91	4.06
TP 125-355/4	0.10	0.10	0.14	0.86	1.42	3.03	4.18
TP 125-375/4	0.10	0.10	0.35	1.07	1.62	3.23	4.38
TP 150-135/4	0.10	0.10	0.24	0.96	1.52	3.13	4.28
TP 150-185/4	0.10	0.10	0.10	0.67	1.23	2.85	3.99
TP 150-195/4	0.10	0.10	0.22	0.94	1.50	3.11	4.26
TP 150-215/4	0.10	0.10	0.10	0.80	1.35	2.97	4.12
TP 150-225/4	0.10	0.10	0.18	0.90	1.46	3.07	4.22
TP 150-235/4	0.10	0.10	0.20	0.92	1.48	3.09	4.24
TP 150-236/4	0.10	0.10	0.19	0.91	1.47	3.08	4.23
TP 150-245/4	0.10	0.10	0.25	0.97	1.53	3.14	4.29
TP 150-255/4	0.10	0.12	0.61	1.32	1.88	3.48	4.63
TP 150-285/4	0.17	0.33	0.81	1.53	2.08	3.68	4.82
TP 150-286/4	0.10	0.10	0.39	1.11	1.68	3.27	4.42
TP 150-326/4	0.10	0.10	0.51	1.22	1.78	3.38	4.53
TP 150-365/4	0.10	0.23	0.72	1.43	1.98	3.59	4.73
TP 150-366/4	0.10	0.11	0.60	1.32	1.87	3.47	4.62
TP 150-405/4	0.22	0.38	0.86	1.57	2.12	3.72	4.87
TP 150-406/4	0.10	0.22	0.70	1.42	1.97	3.57	4.72
TP 150-455/4	0.35	0.51	0.98	1.70	2.25	3.84	4.99
TP 150-495/4	0.59	0.75	1.22	1.93	2.48	4.07	5.21
TP 200-175/4	0.10	0.10	0.42	1.14	1.70	3.30	4.45
TP 200-205/4	0.10	0.10	0.47	1.18	1.74	3.35	4.49
TP 200-215/4	0.10	0.10	0.50	1.22	1.77	3.38	4.53
TP 200-225/4	0.10	0.10	0.12	0.84	1.40	3.01	4.16
TP 200-235/4	0.10	0.10	0.44	1.16	1.71	3.32	4.47
TP 200-245/4	0.10	0.10	0.55	1.26	1.82	3.42	4.57
TP 200-275/4	0.24	0.40	0.88	1.60	2.15	3.75	4.89
TP 200-285/4	0.10	0.10	0.13	0.85	1.41	3.02	4.17
TP 200-295/4	0.10	0.10	0.22	0.94	1.50	3.11	4.26
TP 200-305/4	0.40	0.56	1.03	1.74	2.29	3.89	5.03
TP 200-325/4	0.10	0.10	0.32	1.04	1.59	3.20	4.35
TP 200-335/4	0.10	0.10	0.17	0.89	1.45	3.06	4.21
TP 200-365/4	0.10	0.10	0.43	1.15	1.70	3.31	4.46
TP 200-385/4	0.10	0.10	0.18	0.90	1.46	3.07	4.22
TP 200-445/4	0.10	0.14	0.62	1.34	1.89	3.49	4.64
TP 200-455/4	0.10	0.19	0.67	1.39	1.94	3.54	4.69
TP 200-495/4	0.10	0.14	0.62	1.34	1.89	3.50	4.64

Pump type	p [bar]						
	20 °C	60 °C	90 °C	110 °C	120 °C	140 °C	150 °C
TP 200-515/4	0.18	0.34	0.82	1.53	2.09	3.69	4.83
TP 200-585/4	0.29	0.45	0.93	1.64	2.19	3.79	4.93
TP 200-655/4	0.48	0.63	1.11	1.82	2.37	3.96	5.11

16. Key application data

Dear customer,

If you need an ATEX certificate or if you cannot select the pump on the basis of the guidelines in section Pumped liquids, please fill in the following form in cooperation with a Grundfos representative. This will help to ensure that Grundfos supplies you with a pump solution adapted to meet exactly your needs in terms of pump type, pump materials, shaft seal type, elastomers and accessories.

Customer information

Company name:	Project title:
Customer number:	Reference number:
Phone number:	Customer contact:
Fax number:	
Email address:	

Quotation made by:

Company name:	Prepared by:	
Phone number:	Date:	Page 1 of
Fax number:	Quotation number:	
Email address:		

Operating conditions

Pumped liquid

Type of liquid:				
Chemical composition, if available:				
Distilled/demineralised water?	Yes:		No:	
Conductivity of distilled or demineralised water:		[µS/cm]		
Minimum liquid temperature:		[°C]		
Maximum liquid temperature:		[°C]		
Vapour pressure of liquid:		[bar]		
Liquid concentration:		%		
Liquid pH value:				
Dynamic liquid viscosity:		[cP] = [mPa s]		
Kinematic liquid viscosity:		[cSt] = [mm^2/s]		
Liquid density:		[kg/m^3]		
Specific heat capacity of liquid:		[kJ/(kg·K)]		
Air or gas in liquid?	Yes:		No:	
Solids in liquid?	Yes:		No:	
Contents of solids in liquid, if available:		% of mass		
Additives in liquid?	Yes:		No:	
Does the liquid crystallise?	Yes:		No:	
When does crystallisation happen?				

Does the liquid get sticky when volatiles evaporate from the pumped liquid? Yes: ____ No: ____

Description of 'sticky' circumstances:

Is the liquid hazardous or poisonous? Yes: _____ No: _____

Special measures to be taken into account when dealing with this hazardous or poisonous liquid:

_____

_____

Special measures for handling this liquid: _____

_____

CIP liquid, cleaning-in-place

Type of liquid: _____

Chemical composition, if available: _____

Liquid temperature during operation: _____ [°C]

Maximum liquid temperature: _____ [°C]

Vapour pressure of liquid: _____ [bar]

Liquid concentration: _____ %

Liquid pH value: _____

Pump sizing

Main duty point: Q: _____ [m^3/h] H: _____ [m]

Maximum duty point: Q: _____ [m^3/h] H: _____ [m]

Minimum duty point: Q: _____ [m^3/h] H: _____ [m]

Ambient operating conditions

Ambient temperature: _____ [°C]

Altitude above sea level: _____ [m]

Pressure

Minimum inlet pressure: _____ [bar]

Maximum inlet pressure: _____ [bar]

Outlet pressure, inlet pressure and head: _____ [bar]

ATEX marking

Required marking of the pump

Customer's equipment group, e.g. II: _____

Customer's equipment category, e.g. 2, 3: _____

Gas, G, and/or dust, D: Gas (G): _____ Dust (D): _____ Gas and dust (G/D): _____

Required marking of the motor

Protection type, e.g. d, de, e, nA:

Maximum experimental safe gap, e.g. B, C:

Temperature class

gas, e.g. T3, T4, T5: _____

dust, e.g. 125 °C: _____ [°C]

Description/sketch

Detailed description of ATEX application

Attach a drawing, if possible: _____

_____

_____

ATEX certificate required	Yes: _____	No: _____				
Frequency converter						
Frequency converter option wanted?	Yes: _____	No: _____				
Control parameter:	Pressure: _____	Temperature: _____	Flow rate: _____	Other: _____		
Detailed description of requirements Attach a drawing, if possible:	_____					

System information

Please provide us with information about your system and a simple sketch, if possible. This gives us an idea as to whether you need accessories or monitoring equipment, or whether you already have a suitable system which makes it unnecessary to attach any further equipment.

17. Grundfos Product Center

Online search and sizing tool to help you make the right choice.
From the international view, you can select your specific country to view the product range available to you.
International view: *https://product-selection.grundfos.com*

All the information you need in one place

Performance curves, technical specifications, pictures, dimensional drawings, motor curves, wiring diagrams, spare parts, service kits, 3D drawings, documents, system parts. The Product Center displays any recent and saved items - including complete projects - right on the main page.

Downloads

On the product pages, you can download installation and operating instructions, data booklets, service instructions, etc., in PDF format.

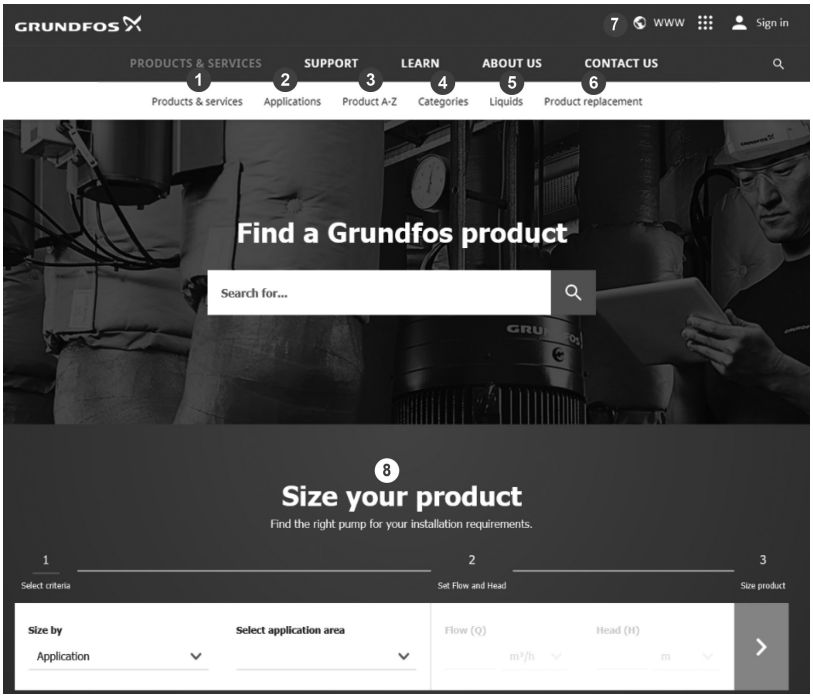

When you select your country, you see the menus below. Note that some menus may not be available depending on the country.
Example: *https://product-selection.grundfos.com/uk*

Pos.	Description
1	**Products & services** enables you to find products and documents by typing a product number or name into the search field.
2	**Applications** enables you to choose an application to see how Grundfos can help you design and optimize your system.
3	**Products A-Z** enables you to look through a list of all the Grundfos products.
4	**Categories** enables you to look for a product category.
5	**Liquids** enables you to find pumps designed for aggressive, flammable or other special liquids.
6	**Product replacement** enables you to find a suitable replacement.
7	**WWW** enables you to select the country, which changes the language, the available product range and the structure of the website.
8	**Sizing** enables you to size a product based on your application and operating conditions.

18. Document quality feedback

To provide feedback about this document, scan the QR-code using your phone's camera or a QR code app.

Click here to submit your feedback

© Grundfos Holding A/S 03.2026

93266062

ECM: 1447552	03.2026

Grundfos Holding A/S
Poul Due Jensens Vej 7
DK-8850 Bjerringbro
Tel: +45 87 50 14 00
www.grundfos.com

GRUNDFOS