UPMS

GRUNDFOS

Table of contents

1. Product description . . . 3
Features . . . 3
Benefits . . . 3

2. Applications . . . 4
Gas- or oil-fired space and combination heaters . . . 4
Solid fuel heaters . . . 4
Heat pumps . . . 4
Micro/Mini combined heat and power cogeneration . . . 5
Space heating systems (zone pump, primary and secondary pumps) . . . 5
Combined space heating and cooling systems . . . 5
Domestic hot-water generation . . . 5
Domestic hot-water recirculation . . . 5

3. Identification . . . 6
Type key . . . 6
Nameplate . . . 6

4. Product range . . . 7
Performance range . . . 7

5. Construction . . . 8
Exploded and sectional views . . . 8
Material specification . . . 8
Description of components . . . 9

6. Operating panel . . . 13
Setting of the product . . . 14

7. Technical data . . . 15
Duty range . . . 15
Operating conditions . . . 15
Mechanical data . . . 15
Electrical data . . . 15
Miscellaneous data . . . 16

8. Approvals . . . 17

9. Control modes . . . 18
Constant curve . . . 18

10. External control mode and signals . . . 19
Control principles . . . 19
Control signals . . . 19
Digital low-voltage PWM signal . . . 19
PWM interface . . . 19
PWM input signal profile A (heating) . . . 19
PWM feedback signal (standard) . . . 20
Control signal data levels . . . 21
0-10 VDC . . . 21

11. Performance curves and technical data . . . 22
Curve conditions . . . 22
UPMS 20-78 F 165 AR . . . 23
UPMS 15-78 130 . . . 24
UPMS 25-78 130 AR . . . 25
UPMS 20-58 F (N) 165 . . . 26
UPMS 15-58 LUNA4 AR . . . 27

12. Accessories . . . 28

13. Document quality feedback . . . 29

1. Product description

TM084881

Grundfos UPMS is a high-efficiency ECM variable-speed circulator that can be used as an integrated circulator pump in systems designed for a wide variety of heating applications. The pump features robust startup, self-ventilating ability and dry-running protection leading to fewer callbacks after installation.

The speed can be controlled via low-voltage PWM (Pulse Width Modulation) signal, 0-10V or by manually adjusting the speed setting to constant curve I, II or III.

Features

- Speed-controlled, high-efficiency pump fitted with electronically commutated motor (ECM) with permanent-magnet rotor and frequency converter.
- Either externally controlled by digital pulse-width modulation (PWM) low-voltage signal or 0-10 V analog signal.
- Next generation ECM pump designed to integrate with boilers for better system efficiencies.
- Designed and built on previous known and proven platforms and technologies.
- Fits into existing boiler ranges.
- Intuitive user interface.
- PWM feedback signal when using PWM control for improved system performance.
- Optional terminal box for external electrical connections to the boiler. Superseal connector for fast and easy electrical connection on the production line.
- Three settings for constant curve.

Benefits

- Use up to 87 % less electrical power than conventional constant-speed pumps.
- Use up to 25 % less electrical power than the first generation of ECM pumps.
- External signal control gives the boiler the control of the media flow for better system performance and efficiency.

2. Applications

Applications
Gas- or oil-fired space and combination heaters
Solid fuel heaters
Heat pumps (brine side)
Micro/mini combined heat and power cogeneration
Space heating systems (zone pump, primary and secondary pumps)
Combined space heating and cooling
Domestic hot-water generation
Domestic hot-water recirculation

Gas- or oil-fired space and combination heaters

Many of the installed systems for space and water heating in building services still use fossil fuels, such as natural gas or mineral oil, although the use of solid fuels out of biomass is increasing. Heaters with higher water content, such as floor-standing boilers, are heated independent of the actual flow. Heaters, such as wall-mounted boilers, only operate when there is a minimum flow through the primary heat exchanger. In a combi-boiler, the pump supplies both the heating system and the domestic hot water supply.

Many of these heaters are condensing boilers temperature-controlled by an outdoor temperature reset system controller with different time programs, which means the central heating water temperature is often lower than the domestic hot-water temperature. In systems with domestic hot-water supply either as combination heaters with integrated DHW supply or with external DHW tank or heat exchanger, there is a need to increase the media temperature temporarily above DHW temperature level. In small residential buildings, the heating demand for DHW is higher than for space heating.

Pumps for primary circuits must be controlled by the heaters to optimise combustion conditions and the condensation process. Often this can only be achieved by using a variable-speed pump with external control signal from the boiler controller.

Solid fuel heaters

As most of these heaters use wood biomass, such as pellets, split logs or wood chips. These heaters are mostly reacting slowly on different heat demands. For this reason, the liquid temperature may increase, and there is a need for keeping the flow constant and for storing the energy in a buffer tank.

Heat pumps

Different types of heat pumps are on the market:

- Compressor heat pumps with electric or combustion motors
- Sorption heat pumps. Sorption is a physical-chemical process where either a liquid or a gas is absorbed by another liquid or is retained by the surface of a solid object. Both processes are reversible and only occur under certain conditions through physical effects, e.g. pressure and temperature. Often a pump with customised specification is installed inside such a process unit.

Primary pumps depend on the heat transmission principle:

- Air-to-air heat pumps are often used in air-conditioning systems and forced air heating

No pump is used.

- Air-to-water heat pumps for space heating and cooling or water heating

The heat source is mainly outdoor air down to an outside temperature of -4 °F (-20 °C). Its energy is mainly extracted directly by a fan-supplied air evaporator of the heat pump.

- Water-to-water heat pumps for space heating and cooling or water heating

The energy source can be groundwater between 45 °F (7 °C) and 54 °F (12 °C). Groundwater is extracted mainly via a submersible pump in a supply well and returned via a return well. If its water quality is not guaranteed, there is a primary circuit between a heat exchanger and the heat pump. This circuit is circulated by a pump that must stand liquid temperatures down to 36 °F (2 °C).

- Brine-to-water heat pumps for space heating and cooling or water heating

Horizontal ground collectors or probes set vertically into the ground deliver the ground-stored solar energy via a mixture of water and antifreeze (brine) to the evaporator of the heat pump. This circuit is circulated by a pump that must stand liquid temperatures down to 36 °F (2 °C) or lower. The secondary pumps do not differ significantly from boiler applications. The liquid temperature is normally not above 140 °F (60 °C), the differential temperature is mostly small. Constant-speed compressor heat pumps often require constant flow and long cycle times. A buffer tank can prolong the cycle time and make the flow through the heat pump independent of the flow in the heating distribution

circle. Variable-speed compressors often go together with a variable-speed pump, which should be externally controlled by the heat pump controller.

Micro/Mini combined heat and power cogeneration

Cogeneration of heat and power can be divided into combustion engines, stirling engines and fuel cells. Secondary pumps are not that different from boiler applications. However, vibrations, liquid temperature and ambient temperature can be relatively high. Often a constant flow is required, therefore a buffer tank is an advantage.

Space heating systems (zone pump, primary and secondary pumps)

The secondary pump is often a self-controlled stand-alone pump and responds to the changing flow demand of heat consumers like baseboard, fan coils, radiators or radiant floor heating circuits. If an automatic bypass valve is installed to ensure a minimum flow, you must adjust the differential-pressure control of the pump in a way to ensure the function of the automatic bypass valve. The maximum liquid temperature and differential temperature depends on the system design. T_{max} is normally from 86 to 194 °F to (30 to 90 °C), and ΔT is between 9 and 36 °F (-13 and 2 °C.

Combined space heating and cooling systems

Forced air, floor-heating or ceiling-cooling systems together with reversible heat pumps can heat rooms in winter and reduce the temperature of the room air by 39 to 43 °F (4 to 6 °C) in summer with one system. When cooling the system, the liquid temperature must be kept above the dew point of the air to avoid condensing on the cooled floor, walls or ceilings.

Domestic hot-water generation

In indirect heated DHW systems, the pump can be placed on both sides of the heat exchanger. In a DHW cylinder, drinking water is stored and usually heated indirectly by primary heating water from the boiler either by an external plate heat exchanger or by an internal indirect coil.

Domestic hot-water recirculation

Hot-water recirculation pumps circulate the drinking water on the secondary side from the taps back to the water heater to ensure comfort. The materials in contact with drinking water must comply with the applicable drinking water standards.

3. Identification

Type key

Example: UPMS 20-58 F 165 115V CB 9H

Code	Explanation	Designation
UPMS	Standard	Pump type
15	R 1/2" / G 1"	Nominal diameter
20	R 3/4" / G 1 1/4"	
25	R 1" / G 1 1/2"	
58	19 ft (5.8 m)	Max. head
78	26 ft (7.8 m)	
F	Flange	Pipe connection
[ ]	Union	
[ ]	Cast iron	Pump housing
N	Stainless steel	
LUNA4	Composite, PA6.6	
130	130 mm	Port to port
150	150 mm	
165	165 mm	
A	PWM profile, heating	External signal
R	0-10 Volt	
115V	115 Volt	Voltage
[ ]	No conduit box	Power connection
CB	Conduit box	
3H	3 o'clock (right)	Control box position
9H	9 o'clock (left)	
0H	12 o'clock (top)	
OEM	OEM circulator	Customer code

Nameplate

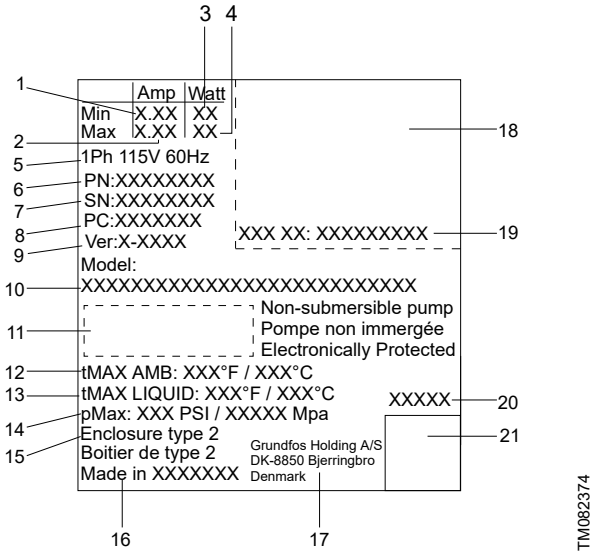

Pos.	Description
1	Min. current consumption
2	Max. current consumption
3	Min. power consumption
4	Max. power consumption
5	Number of phases, voltage and frequency
6	Product number
7	Serial number
8	Factory code and production code (year and week)
9	Version letter and update number
10	Pump model
11	Enclosure class
12	Max. ambient temperature
13	Max. liquid temperature
14	Max. system pressure
15	Enclosure type
16	Country of origin
17	Grundfos address
18	Approvals
19	FCC radio approval ID
20	Combined legal product code
21	Data matrix

4. Product range

Performance range

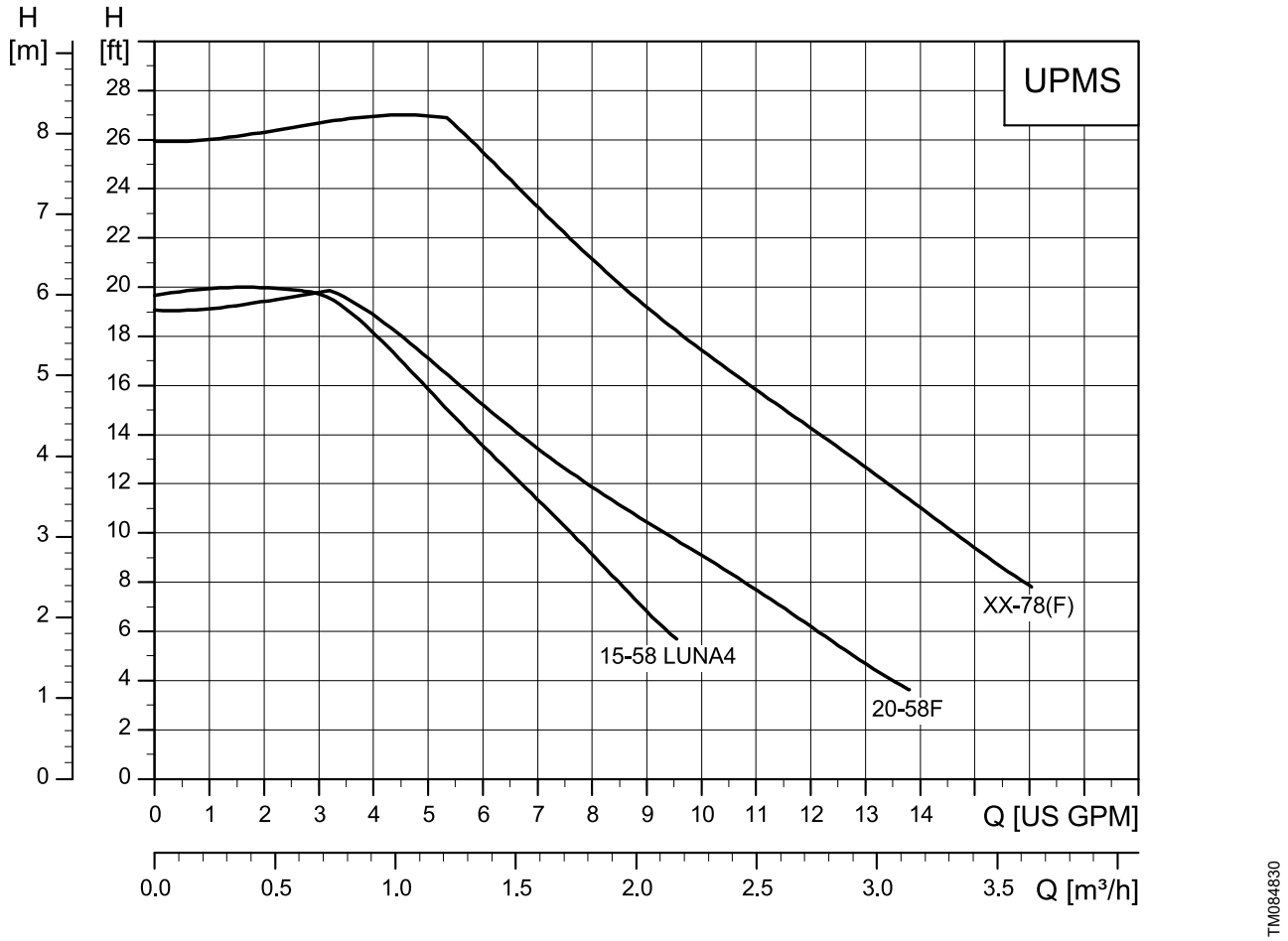

Performance range UPMS

5. Construction

Exploded and sectional views

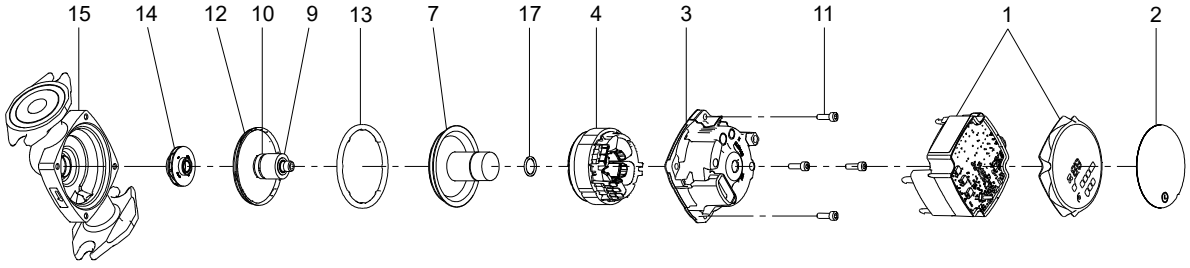

TM084124

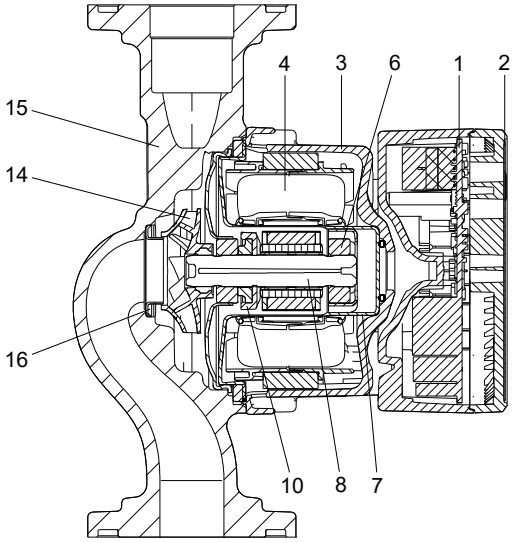

TM084125

Material specification

Pos.	Component	Material
1	Control box	Composite
	Control electronics	PCB with SMD components
2	Front foil	-
3	Stator housing	Aluminium, silumin
4	Stator	Copper wire
	Stator lamination	Laminated iron
6	Radial bearing	Ceramics
7	Rotor can	Stainless steel
8	Shaft	Ceramics
9	Rotor	NdFeB
	Rotor tube	Stainless steel
	Rotor cladding	Stainless steel
	Bush	Stainless steel
10	Thrust bearing	Carbon
	Thrust bearing retainer	EPDM

Pos.	Component	Material
11	Screws	Steel
12	Bearing plate	Stainless steel
13	Gasket	EPDM
14	Impeller	Composite
15	Pump housing	Cast iron
		Stainless steel
		Composite
16	Neck ring	Stainless steel
17	O-ring	EPDM

Description of components

The pumps are of the canned-rotor type as pump and motor form an integral unit without shaft seal and with only one gasket for sealing and four screws for fastening the stator housing to the pump housing. The bearings are lubricated by the pumped liquid as the rotor can is filled with water. The focus has been on using eco-friendly materials as well as on limiting the number of materials.

Motor

The efficiency of the three-phase, 4-pole, synchronous, electronically commutated permanent-magnet (ECM/PM) motor type is considerably higher compared to a conventional asynchronous squirrel-cage motor.

The ECM/PM motor is designed according to the canned-rotor principle. The design of the mechanical motor components has mainly focused on the following features:

- Reliable with stainless-steel rotor can in one part and a specific formed EPDM gasket
- simple design meaning as few components as possible, each with several functions
- high efficiency due to permanent magnets and low-friction bearings.

The motor is cooled by the pumped liquid, which reduces the sound pressure level to a minimum. Being software-protected, the pump requires no further motor protection.

Stator housing

The aluminium die-cast stator housing with four fixing holes is following the design of the well-accepted Grundfos UP pumps. It enables easy change of motor positions by removing the four screws holding the stator housing and turning the housing to the desired position. There are two versions both enclosure type 2: one without drain hole and one with one drain hole in two possible positions. During operation the drain hole must always point downwards. The stator housings are all CED electrocoated.

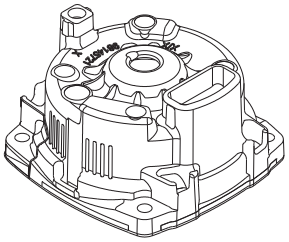

TM084122

Stator housing

Stator and windings

The product has a three-phase stator with six concentric-positioned in-slot windings.

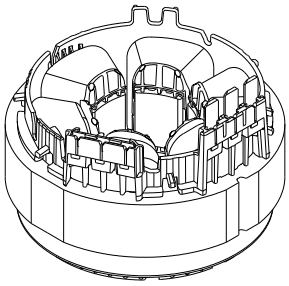

TM084123

Stator

Rotor can

The rotor can is drawn out of one sheet of stainless steel. It contains the ground and honed upper radial bearing.

Shaft with rotor

The shaft is made of ceramics. To avoid precipitation of calcium in the radial bearings, the shaft has been plunge-ground at the journal bearings. It has a throughgoing hole to ensure good lubrication and cooling of the upper bearing. The rotor can does not need to be vented as air inside the rotor chamber escapes the system through the throughgoing hole of the shaft.

The rotor core is made of bonded neodymium permanent magnets. The rotor is encapsulated in a thin stainless-steel cladding welded to the end covers. The rotor is fixed on the shaft by a back iron with a bush. After assembly, the whole unit is balanced.

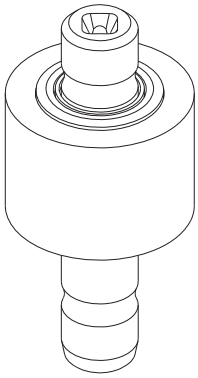

TM059250

Shaft with rotor

Thrust bearing

The antimony-free carbon thrust bearing is fitted to the shaft in a flexible EPDM retainer.

In combination with the bearing plate, the thrust bearing prevents forces from being transmitted axially to the rotor and rotor can.

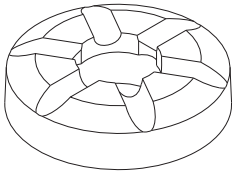

TM059252

Thrust bearing

Bearing plate

The bearing plate is made of stainless steel. The ground and honed inner radial and axial ceramic bearing is pressed into the bearing plate. The axial bearing is lapped to reduce any friction and the run-in period of the pump. Due to the relatively large bearing plate surface, the motor heat is effectively carried away by the pumped liquid. Tiny laser holes through the bearing plate ensure optimum venting and minimize the gradual replacement of rotor liquid with the pumped liquid. For drinking water variants, a bearing plate without laser holes is used.

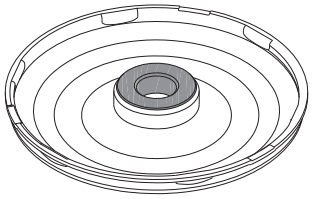

TM059249

Bearing plate with ceramic bearing

Impeller

The composite impeller is of the radial type with curved blades. The impeller shaft with rotor and bearing plate is assembled in one unit to eliminate possible misalignment in the bearings.

- Default size: diameter 38 mm, clearance 3 mm.

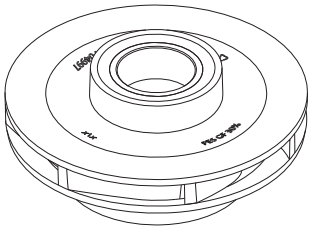

TM059251

Impeller

Shaft with impeller complete

The unit is a premounted combination of the shaft with a rotor, thrust bearing with a retainer, bearing plate and impeller. The moving unit is inserted into the rotor can with the upper radial bearing. The unit runs as a bearing system, ceramic/ceramic, with almost no wear as long as it is lubricated. During production the unit is lubricated with glycerine. When the unit is mounted in a water-filled system, the system water lubricates the bearings. This guarantees the extremely reliable Grundfos ceramic bearing system of wet-running pumps.

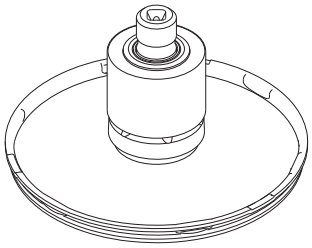

TM059256

Shaft with impeller

Gasket

The gasket is a formed flat O-ring made of EPDM, which is applicable for drinking water use as well. The gasket seals up stator housing, pump housing, rotor can and bearing plate.

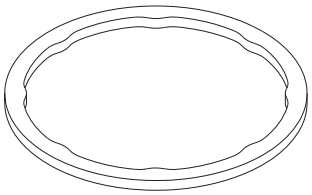

TM059257

Gasket

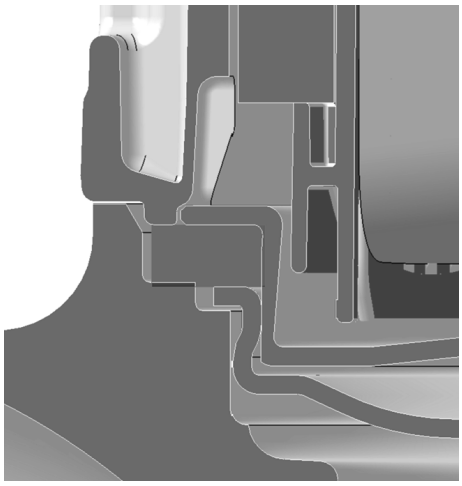

TM060846

Sectional drawing showing sealing principle of gasket

Control box

The control box housing is made of two composite parts welded together. Power and signal connectors are integrated. The control box is available with a signal connection designed for TE Mini Superseal connector.

The control box contains the PCBs for internal power supply, control and communication. The control box includes all relevant functions and EMC filter components. It is available with different hard- and software, mainly different regarding internal or external control, with or without operating panel and communication signal.

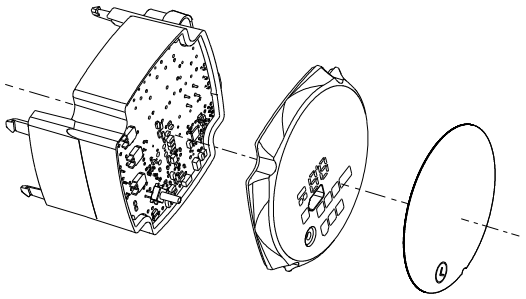

TM084198

Control box

Pump housing

As a standard, the pump housing is available in electrocoated cast iron with either flange or threaded inlet and outlet ports. The reference pump housing is of the in-line type. The stainless-steel neck ring is pressed into the pump housing to minimize the amount of liquid running from the outlet side of the impeller to the inlet side.

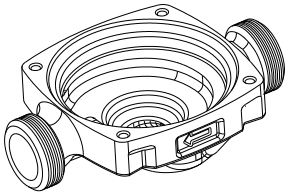

TM084199

Threaded pump housing

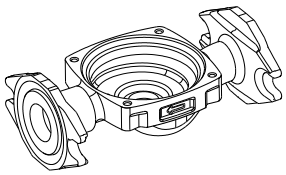

TM084200

Flanged pump houseing

Cast-iron electrocoated (CED) in-line housings with threads

TM084217

CED 15 × 130 mm, 1"

TM084218

CED 25 × 130 mm, 1 1/2"

Cast-iron electrocoated (CED) in-line housings with flange

Stainless-steel (N) in-line housings with flange - approved for drinking water

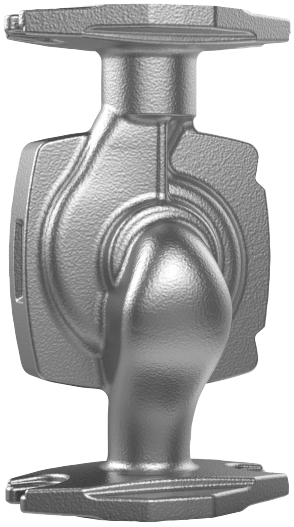

Composite end-suction housings with threads or clips, with an integrated vent and special connections

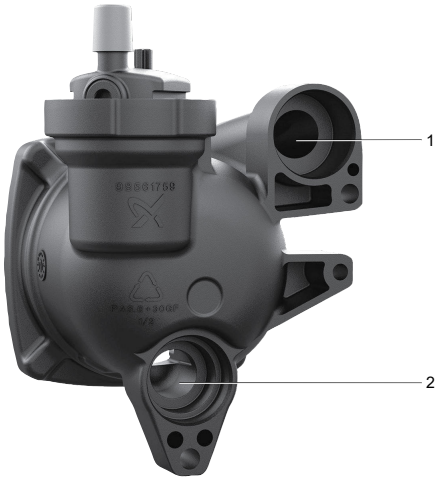

LUNA4 composite, end-suction, air outlet

Pos.	Description
1	Outlet
2	Inlet

Expected lifetime of composite PA6.6 housings

The expected lifetime of composite PA6.6 housings in heating applications depends on the liquid temperature and the system pressure.

The liquid temperature must not exceed 95 °C.

For composite housings, we recommend that the system pressure does not exceed 3 bar (0.3 MPa), for cast iron housings 6 bar (0.6 MPa). For shorter periods of time, for example, in fault scenarios, the composite housing can withstand 6 bar (0.6 MPa).

The expected lifetime also depends on the time or temperature profile of the application based on which an equivalent constant liquid temperature can be calculated. The influence of the liquid temperature between 60 °C and 95 °C on the expected lifetime is shown in the following diagram.

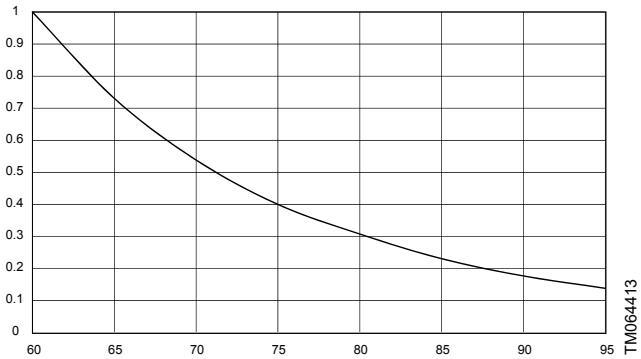

Diagram temperature/expected lifetime for PA 6.6 30 % GF

X-axis	Constant liquid temperature [°C]
Y-axis	Expected lifetime factor

6. Operating panel

The design of the operating panel differs based on the model. See the images below.

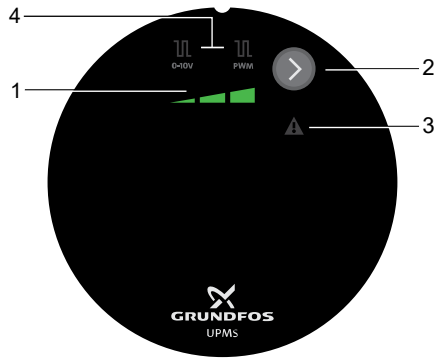

TM084127

UPMS operating panel with external signal

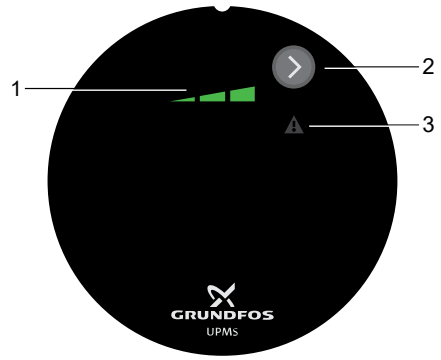

TM084186

UPMS operating panel without external signal, 9 o'clock control box position

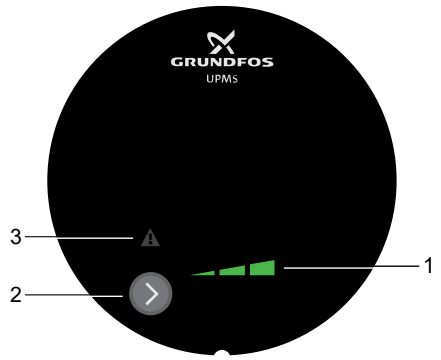

TM084187

UPMS operating panel without external signal, 3 o'clock control box position

Pos.	Description
1	Speed setting (I, II, III) for constant curve
2	Button for changing external signal (for some models) and speed setting
3	Warning and alarm symbol A warning is indicated with yellow, and the pump continues operation. An alarm is indicated with red, and the pump stops.
4	External signal Use the button (3) to select 0-10 V or PWM.

Setting of the product

Press the button to select external signal type (if relevant) or constant-curve setting (I, II or III). The LEDs will indicate the control mode. See table below.

Note that the LED for the chosen setting will flash to indicate it is active.

Models without external signal: A cycle is three button presses.

Models with external signal: A cycle is 5 button presses.

LED	Control mode
TM084188	Setting I
TM084189	Setting II
TM084190	Setting III
TM084191	0-10 V
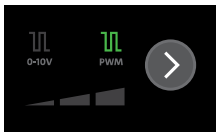 TM084192	PWM

Factory setting

The pump is factory set according to the table below.

Pump type	Factory setting
UPMS 20-78 F 165 AR	PWM
UPMS 20-78 F 165 AR CB	0 - 10 V
UPMS 15-78 130	Constant curve III
UPMS 25-78 130 AR	PWM
UPMS 20-58 F N 165	Constant curve III
UPMS 20-58 F 165	Constant curve III
UPMS 15-58 LUNA4 AR	PWM

7. Technical data

Duty range

	Max. flow rate, Q [gpm (m^3)]	Max. head, H [ft (m)]
UPMS 15-78	16 (3.63)	25.6 (7.8)
UPMS 15-58	13.6 (3.09)	19 (5.8)
UPMS 20-58	13.6 (3.09)	19 (5.8)
UPMS 20-78	16 (3.63)	25.6 (7.8)
UPMS 25-78	16 (3.63)	25.6 (7.8)

Operating conditions

Max. system pressure	175 psi (1.2 MPa) (stainless-steel and cast-iron pump housing)	
	45 psi (0.3 MPa) (composite pump housing)	
Inlet pressure	**Liquid temperature**	**Min. inlet pressure**
	167 °F (75 °C)	0.75 psi (0.005 MPa)
	203 °F (95 °C)	7.25 psi (0.05 MPa)
	230 °F (110 °C)	15.7 psi (0.108 MPa)
Ambient temperature	35-131 °F (2-55 °C)	
Relative humidity	Max. 95 %	
Max. altitude of installation	6562 ft (2000 m) above sea level	

Mechanical data

Max. ambient temperature	131 °F (55 °C)
Max. media temperature	203 °F (95 °C) for composite housings 230 °F (110 °C) for cast-iron housings
Min. media temperature	36 °F (2 °C)
Relative humidity	Maximum 95 %, non-condensing environment
Storage temperature	-40 to 167 °F (-40 to 75 °C)

Electrical data

Insulation class	F
Supply voltage	1 x 115 V, ± 10 %, 60 Hz
Min. supply voltage	103 V (no derate)
Standby power consumption [1)]	< 0.4 W
Surge robustness	3 kV (DM/CM)
Inrush current	< 4 A
Max. leakage current	≤ 0.75 mA (UL 778)
Min. switching time power on/off	No specific requirements
Reaction time - power on	< 2 second
Reaction time - standby [1)]	≈ 1 second
Reaction time - speed change	< 1 second
Motor protection	The motor is protected by the electronics in the control box and requires no external motor protection.
High voltage protection	1200 VAC (UL 778)

1) Applicable for pumps that are stopped and connected to power. Only applicable for variants with the PWM/0-10V functionality.

Miscellaneous data

Dry-running ability - first start	3 x 20 seconds (5 minutes interval), all pumps are lubricated with glycerine.
Dry-running ability - during operation	The rotor can must be filled with water (clean and without particles).
Expected lifetime	> 100,000 h (with specified load profile) > 500,000 on/off cycles
Acoustic sound pressure level (LP)	≤ 25 dB(A)
Enclosure class	Type 2 (for indoor use only)

Approvals

Drinking-water approvals

CLASSIFIED C UL US

WATER QUALITY
Drinking water system component
NSF/ANSI 61
NSF/ANSI 372

TM076608

Specific compliant pump housings are available.

8. Approvals

Pump model	c US	c UL us LISTED	c UL us CLASSIFIED WATER QUALITY Drinking water system component NSF/ANSI 61 NSF/ANSI 372
Pumps without conduit box	✓	-	✓ 2)
Pumps with conduit box	-	✓	✓ 2)

2) It only applies to pumps with pump housing in stainless steel.

9. Control modes

Constant curve

In the constant-curve mode, the pump runs at a constant curve, which means that it runs at constant speed or power. The pump performance follows the selected constant curve. This control mode is especially suitable in applications where the characteristics of the heating system are steady, and the emitters require a constant flow. The selection of setting I, II, or III depends on the characteristics of the system and the actual required flow and heat demand. Mode "I" has the lowest flow and lowest power consumption, and mode "III" gives the highest flow and highest power consumption.

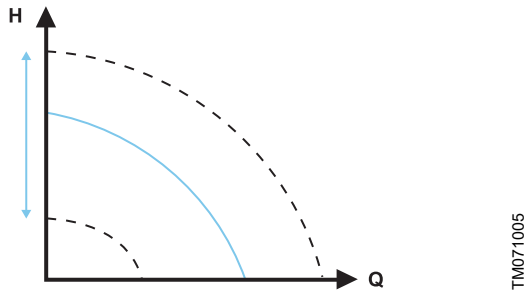

Constant curve

10. External control mode and signals

Control principles

The pumps are controlled via a digital low-voltage pulse-width modulation (PWM) signal or a 0 - 10 volt linear input signal, which means that the speed of rotation depends on the input signal. The speed changes as a function of the input profile.

The PWM communication signals are standardised in the VDMA Einheitsblatt 24244 "Wet runner circulating pumps - Specification of PWM control signals".

Control signals

Digital low-voltage PWM signal

The PWM output provides feedback to the controller.

Duty cycle

d % = 100 × t/T

Example	Rating
T = 2 ms (500 Hz)	
t = 0.6 ms	
d % = 100 × 0.6 / 2 = 30 %	
U_{IH} = 5 V	U_{IH}= 4 - 24 V
U_{IL} = 0.5 V	U_{IL}<= 1 V

Example

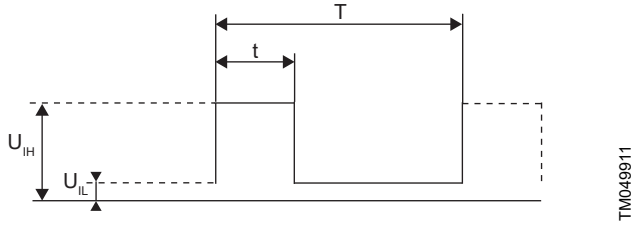

PWM signal

Abbreviation	Description
T	Period of time [s]
d	Duty cycle [t/T]
U_{IH}	High-level input voltage
U_{IL}	Low-level input voltage
I_{IH}	High-level input current

PWM interface

The PWM interface consists of an electronic part connecting the external control signal to the pump. The interface translates the external signal into a signal type that the microprocessor can understand.

In addition, the interface ensures that the user cannot get into contact with dangerous voltage if touching the signal wires when power is connected to the pump.

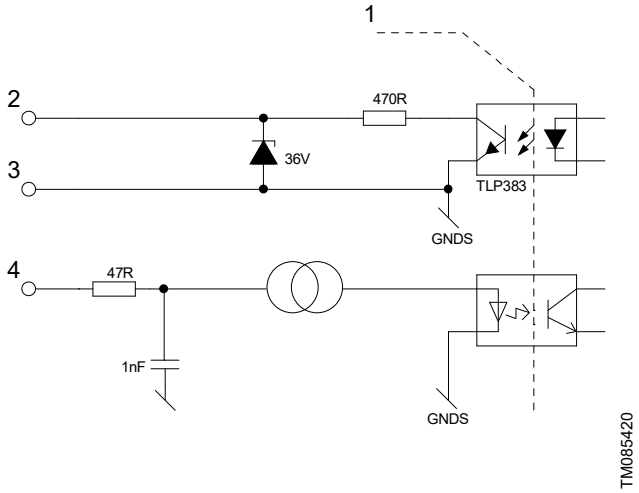

Schematic drawing, interface

Pos.	Description
1	Galvanic isolation
2	PWM output
3	Signal reference (without connection to protective earth)
4	PWM input

PWM input signal profile A (heating)

At high PWM signal duty cycles, a hysteresis prevents the pump from starting and stopping if the input signal fluctuates around the shifting point. At low PWM signal duty cycles, the pump speed is high for safety reasons. In case a cable breaks when mounted in a system, the pump starts to run at maximum speed. This is suitable for both boilers and heat pumps to ensure that the pump transfers heat even if a cable breaks.

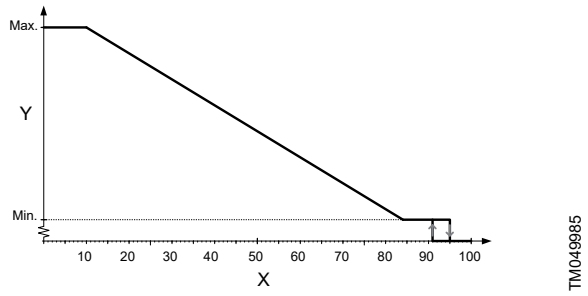

PWM input profile A (heating)

Axis	Value
X	Input duty cycle
Y	Speed

PWM input duty cycle	Pump status
PWM signal ≤ 10 %	Maximum speed
10 % < PWM signal ≤ 84 %	Variable speed from minimum to maximum speed
84 % < PWM signal ≤ 91 %	Minimum speed
91 % < PWM signal ≤ 95 %	Hysteresis area: on/off
95 % < PWM signal ≤ 100 %	Standby mode: off

PWM feedback signal (standard)

The PWM feedback signal offers the same pump information as in bus systems:

- current power consumption (accuracy ± 2 % of PWM signal)
- warning
- alarm
- operating status.

Alarms

Alarm output signals are available because some PWM output duty cycles are dedicated to alarm information. If a supply voltage is measured below the specified supply voltage range, the output duty cycle is set to 75 %. If the rotor is locked due to deposits in the hydraulics, the output duty cycle is set to 90 % as this alarm has a higher priority.

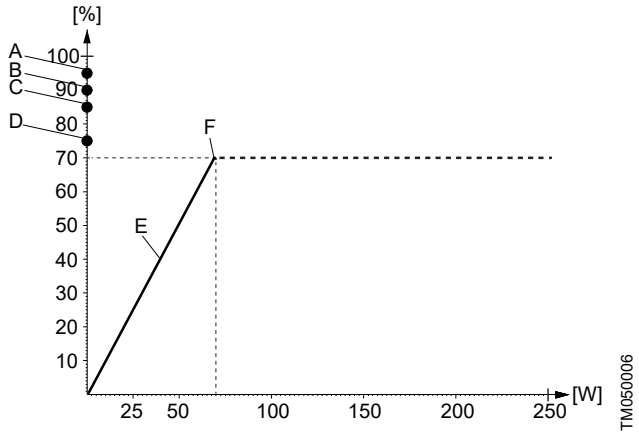

PWM feedback signal, UPMS power consumption

Pos.	Description
X-axis	Output power consumption [W]
Y-axis	PWM output duty cycle in percentage [%]
A	Standby (stop)
B	Alarm stop: fault, blocked pump
C	Alarm stop: electrical fault
D	Warning
E	Slope: 3 W / % PWM signal
F	Saturation at 70 W

PWM output duty cycle	QT [s]	Pump information	DT [s]	Priority
95	0	Standby (stop) by PWM duty cycle	0	1
90	30	Alarm, stop, blocked error	12	2
85	0-30	Alarm, stop, electrical error	1-12	3
75	0	Warning	0	5
0-70		0-70 W (slope 1 W/% PWM)		6
Output frequency: 75 Hz ± 5 %				

QT = qualification time, DT = disqualification time

Control signal data levels

PWM input duty cycle	Symbol	Value
PWM input frequency with high-speed optocoupler	f_i	100-1500 Hz [3]
Rated input voltage - high level	U_{iH}	4-24 V
Rated input voltage - low level	U_{iL}	≤ 1 V
High-level input current	I_{iH}	< 10 mA
Input duty cycle	D_i	0-100 %

3) Only for standard profiles.

PWM output duty cycle	Symbol	Value
PWM frequency output, open collector	f_o	75 Hz ± 5 %
Accuracy of output signal regarding power consumption	-	± 2 % (of PWM signal)
Output duty cycle	D_o	0-100
Output impedance	Z_o	< 500 Ω

0-10 VDC

The UPMS circulators can be externally speed-controlled by an analog 0-10 VDC signal.

The pump requires a 0-10 V signal on the signal port to control the speed of the pump. The pump will run at its minimum speed if the signal fails (cable break).

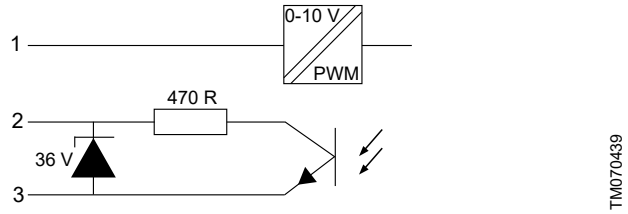

Pos.	Description
1	Signal input
2	Signal output
3	Signal ref.

Profile R

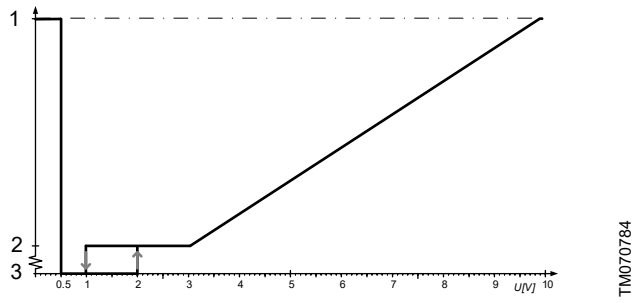

Profile R

Pos.	Description
1	Max.
2	Min.
3	Stop

U [V]	Pump status
0.5 < U ≤ 1	Standby (Stop)
1 < U ≤ 2	Hysteresis
2 < U ≤ 3	Min. speed
3 < U ≤ 10	Speed between min. and max.

Alarm output signal

An alarm output signal is available.

Output transistor status indicates pump operation.

The output signal is activated in the following cases:

- The pump stops when the input signal is between 0.5 V and 2 V.
- The pump stops because of an alarm and the input signal is between 2 V and 10 V.

Output signal is not activated in the following cases:

- Pump fault.
- The pump is running (input voltage is above 0.5 V).

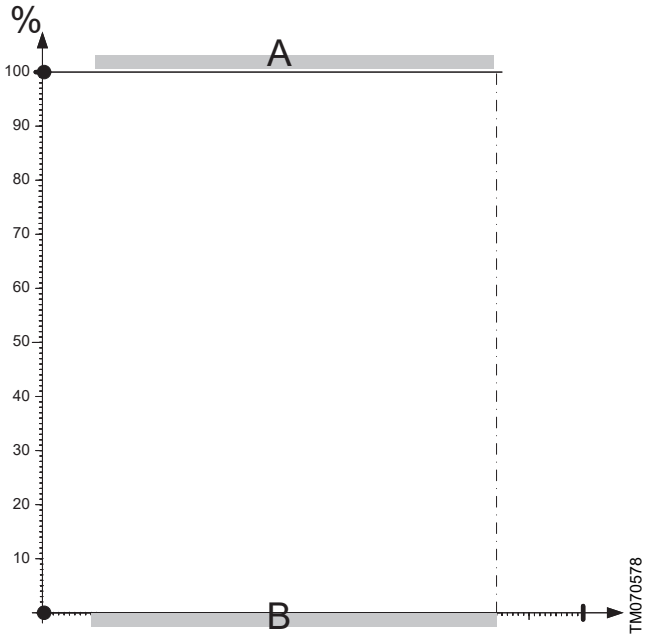

Output profile 0 - 10 VDC

Pos.	PWM output %	Description
A	100	Standby (stop) or alarm stop
B	0	Pump is running.

11. Performance curves and technical data

Curve conditions

The guidelines below apply to the performance curves:

- The test liquid is airless water.
- The curves apply to a density of 62.3 lb/ft^3 (998.21 kg/m^3) and a liquid temperature of 68 °F (20 °C).
- All curves show average values and should not be used as guarantee curves. If a specific minimum performance is required, individual measurements must be made.
- The curves apply to a kinematic viscosity of 1.004 mm^2/s (1.004 cSt).
- The conversion between head H [m] and pressure p [kPa] has been made for water with a density of 1000 kg/m^3. For liquids with other densities, for example hot water, the outlet pressure is proportional to the density.
- Curves have been obtained according to EN 16297.
- Pump variants with PWM signal connection are designed to be speed controlled by an external system controller.
- The performance of PWM controlled pumps is measured with A profile (heating) at eight PWM values: 5 % (max.), 20 %, 31 %, 41 %, 52 %, 62 %, 73 %, 88 % (min.).
- Maximum curves are limited by speed and power.
- Other curves for different control signals or OEM housings are available on request.

UPMS 20-78 F 165 AR

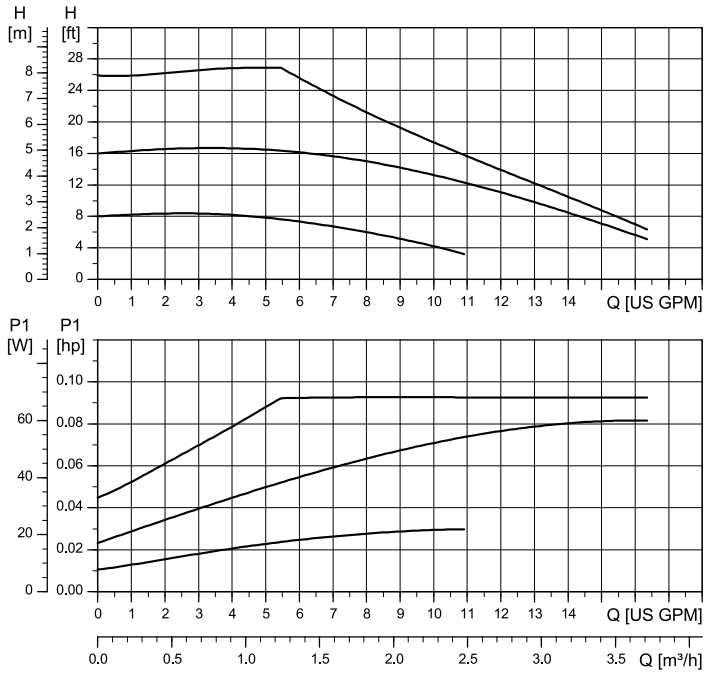

TM084510

Pump settings
PWM or 0-10 V, constant curve (I, II, III)

Electrical data, 1 x 115 V, 60 Hz		
Speed	**P_1 [W]**	**$I_{1/1}$ [A]**
Min.	2	0.04
Max.	68	1.25

Technical data			
System pressure	Max. 174 psi (1.2 MPa)	**Enclosure class**	Type 2
Min. inlet pressure	7 psi (0.05 MPa) at 203 °F (95 °C) liquid temperature	**Motor protection**	No external protection needed
Liquid temperature	36-230 °F (2-110 °C)	**Approval and marking**	cULus

Dimensions

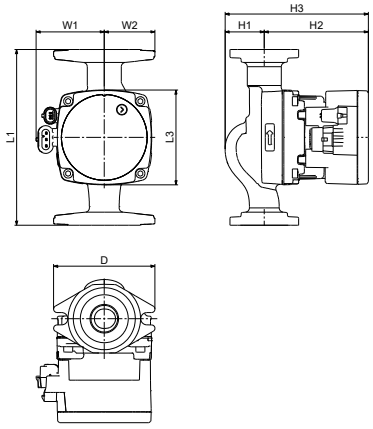

TM084113

Pump type	Dimensions [inch]([mm])							Connections [inch]	Weight [lb (kg)]
	L1	L3	W1	W2	H1	H2	H3		
UPMS 20-78 F 165 AR	6.5 (165)	3.5 (89)	2.5 (64)	1.77 (45)	1.46 (37)	3.86 (98)	5.31 (135)	GF 15/26	6.4 (2.9)

UPMS 15-78 130

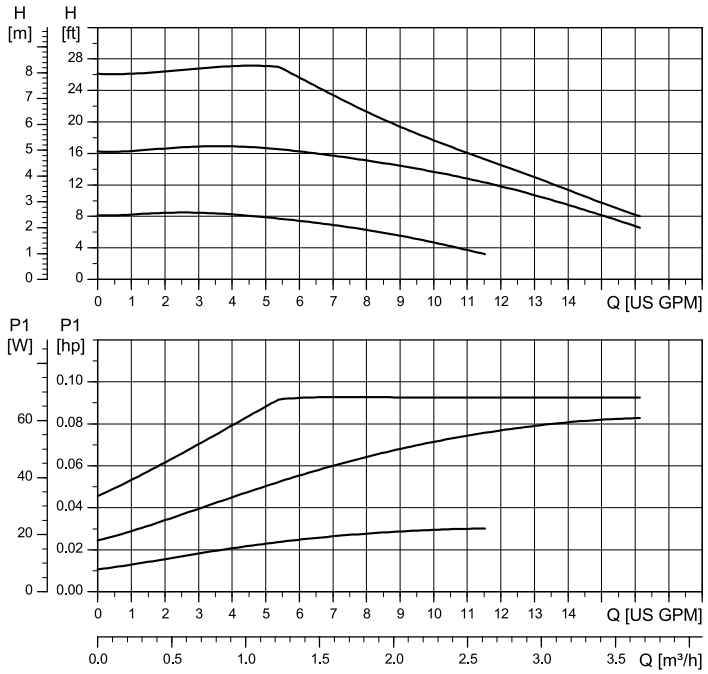

TM084512

Pump settings
Constant curve (I, II, III)

Electrical data, 1 x 115 V, 60 Hz		
Speed	**P_1 [W]**	**$I_{1/1}$ [A]**
Min.	8.4	0.18
Max.	68	1.25

Technical data			
System pressure	Max. 174 psi (1.2 MPa)	**Enclosure class**	Type 2
Min. inlet pressure	7 psi (0.05 MPa) at 203 °F (95 °C) liquid temperature	**Motor protection**	No external protection needed
Liquid temperature	36-230 °F (2-110 °C)	**Approval and marking**	cURus

Dimensions

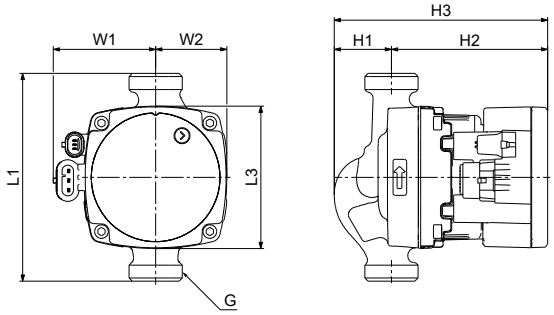

TM084110

Pump type	Dimensions [inch (mm)]							Connections [inch]	Weight [lb (kg)
	L1	L3	W1	W2	H1	H2	H3		
UPMS 15-78 130	5.1 (130)	3.5 (89)	2.5 (64)	1.8 (45)	1.4 (36)	3.9 (98)	5.3 (134)	G1	5.3 (2.4)

UPMS 25-78 130 AR

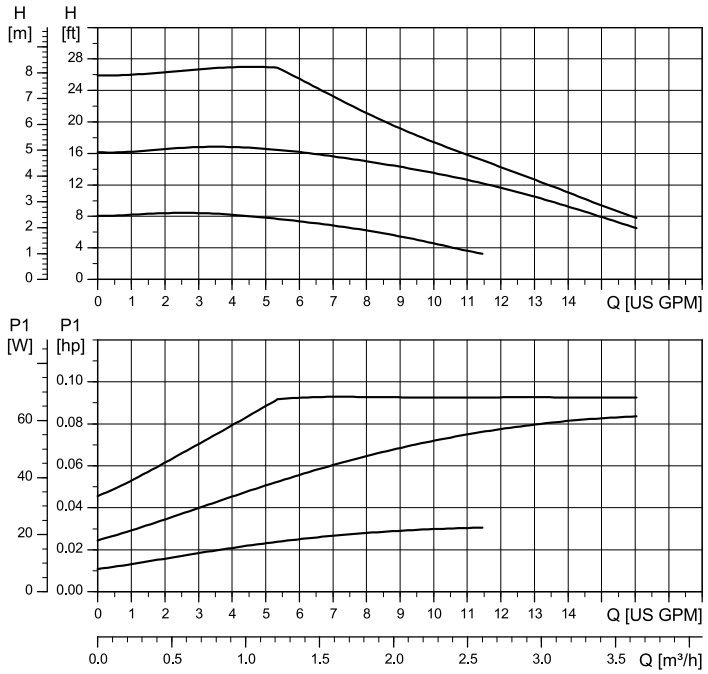

TM084513

Pump settings
PWM or 0-10 V, constant curve (I, II, III)

Electrical data, 1 x 115 V, 60 Hz		
Speed	**P_1 [W]**	**$I_{1/1}$ [A]**
Min.	2	0.04
Max.	68	1.25

Technical data			
System pressure	Max. 174 psi (1.2 MPa)	**Enclosure class**	Type 2
Min. inlet pressure	7 psi (0.05 MPa) at 203 °F (95 °C) liquid temperature	**Motor protection**	No external protection needed
Liquid temperature	36-230 °F (2-110 °C)	**Approval and marking**	cURus

Dimensions

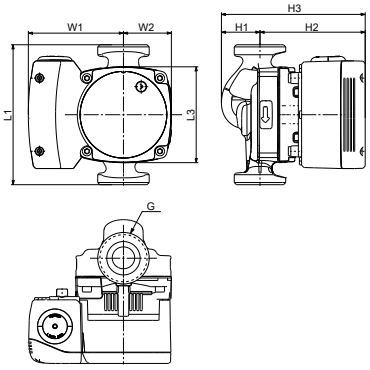

TM084112

Pump type	Dimensions [inch (mm)]							Connections [inch]	Weight [lb (kg)]
	L1	L3	W1	W2	H1	H2	H3		
UPMS 25-78 130 AR	5.1 (130)	3.5 (89)	2.5 (64)	1.8 (45)	1.4 (36)	3.9 (98)	5.3 (134)	G1 ½	5.3 (2.4)

UPMS 20-58 F (N) 165

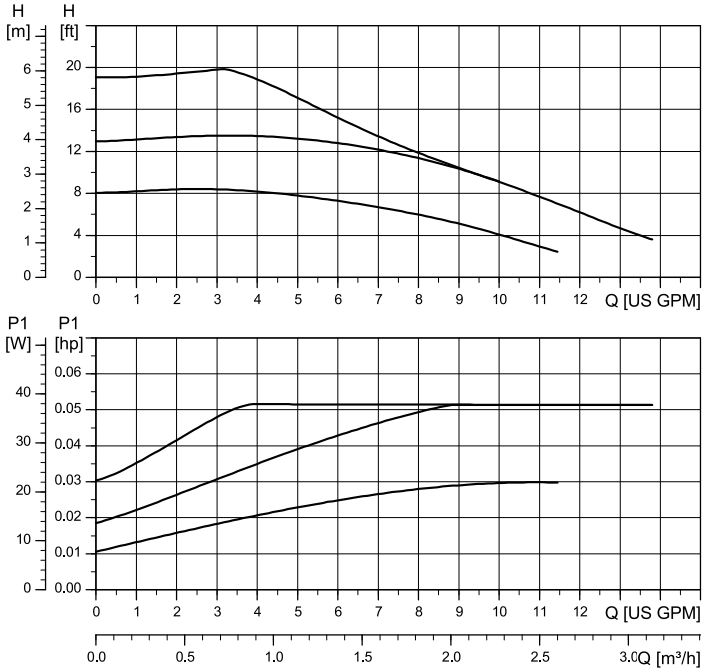

TM084509

Pump settings
Constant curve (I, II, III)

Electrical data, 1 x 115 V, 60 Hz		
Speed	**P_1 [W]**	**$I_{1/1}$ [A]**
Min.	8.4	0.18
Max.	38	0.71

Technical data			
System pressure	Max. 174 psi (1.2 MPa)	**Enclosure class**	Type 2
Min. inlet pressure	7 psi (0.05 MPa) at 203 °F (95 °C) liquid temperature	**Motor protection**	No external protection needed
Liquid temperature	36-230 °F (2-110 °C)	**Approval and marking**	cULus

Dimensions

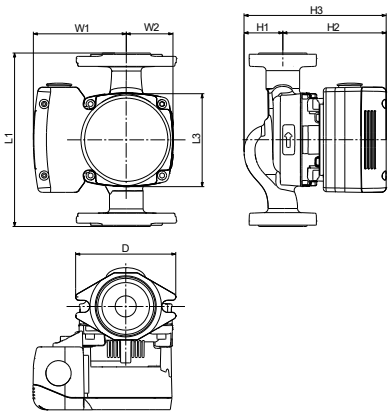

TM082368

Pump type	Dimensions [inch (mm)]								Connections [inch]	Weight [lb (kg)]
	L1	L3	W1	W2	H1	H2	H3	D		
UPMS 20-58 F (N)	6.5 (165)	3.5 (89)	3.46 (88)	1.77 (45)	1.46 (37)	3.86 (98)	5.31 (135)	3.74 (95)	GF 15/26	6.4 (2.9)

UPMS 15-58 LUNA4 AR

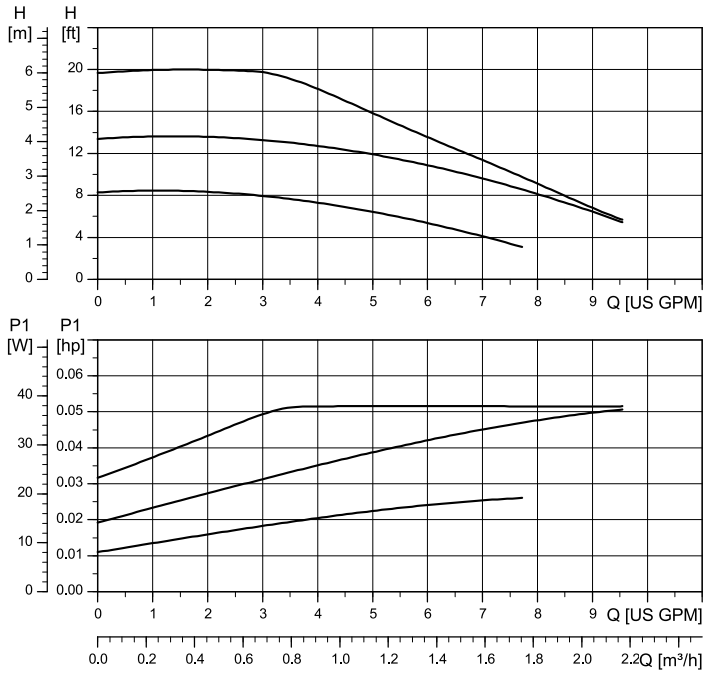

TM084511

Pump settings
PWM or 0-10 V, constant curve (I, II, III)

Electrical data, 1 x 115 V, 60 Hz		
Speed	**P_1 [W]**	**$I_{1/1}$ [A]**
Min.	2	0.04
Max.	38	0.71

Technical data			
System pressure	Max. 43 psi (0.3 MPa)	**Enclosure class**	Type 2
Min. inlet pressure	7 psi (0.05 MPa) at 203 °F (95 °C) liquid temperature	**Motor protection**	No external protection needed
Liquid temperature	36-140°F (2-60°C)	**Approval and marking**	cURus

Dimensions

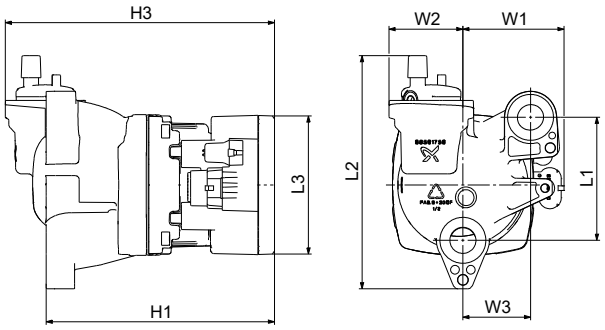

TM084111

Pump type	Dimensions [inch (mm)]							Connections	Weight [lb (kg)]
	L1	L2	L3	W1	W2	H1	H3		
UPMS 15-58 LUNA4 AR	3.1 (78)	5.8 (148)	3.5 (88)	2.5 (61)	1.9 (47)	5.7 (144)	6.7 (170)	Clips	5.3 (2.4)

12. Accessories

Picture	Product description	Product number	Pumps with conduit box	Pumps without conduit box
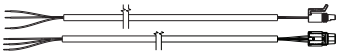	**External signal cable** Connection at pump end: Mini Superseal Connection at the other end: 3 × wires	92733734	✓	✓
	Power cable Connection at pump end: Superseal Connection at the other end: 3 × wires	92733736	-	✓

13. Document quality feedback

To provide feedback about this document, scan the QR-code using your phone's camera or a QR code app.

FEEDBACK_92908174

Click here to submit your feedback

Trademarks displayed in this material, including but not limited to Grundfos and the Grundfos logo, are registered trademarks owned by The Grundfos Group. © 2023 Grundfos Holding A/S, all rights reserved.

92908174 **07.2023**
ECM: 1360170

GRUNDFOS Holding A/S
Poul Due Jensens Vej 7
DK-8850 Bjerringbro
Tel: +45 87 50 14 00
www.grundfos.com