GRUNDFOS **INSTRUCTIONS**

Pressure sensor replacement

SMART Digital S DDA-C

Service kit instructions

SMART Digital S DDA-C
Installation and operating instructions
(all available languages)
http://net.grundfos.com/qrl/92881338

SMART Digital S DDA-C
Service instructions
http://net.grundfos.com/qrl/93079510

GRUNDFOS

English (GB) Service kit instructions

Original service kit instructions

Table of contents

1. **Safety instructions** 4
2. **List of required tools** 5
3. **Dismantling the dosing head** 6
4. **Dismantling the pressure sensor** 11
5. **Assembling the pressure sensor** 12
6. **Assembling the dosing head** 14
7. **Calibrating the pressure sensor** 18
8. **Connecting the valves and lines to the dosing head** 20

1. Safety instructions

Read this document before you start service work on the product. Service work must comply with local regulations and accepted codes of good practice.

Observe the safety instructions in the installation and operating instructions for the product.

2. List of required tools

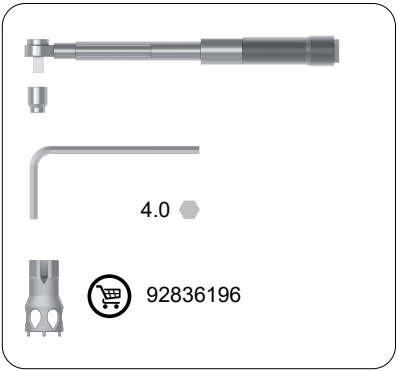

3. Dismantling the dosing head

1.

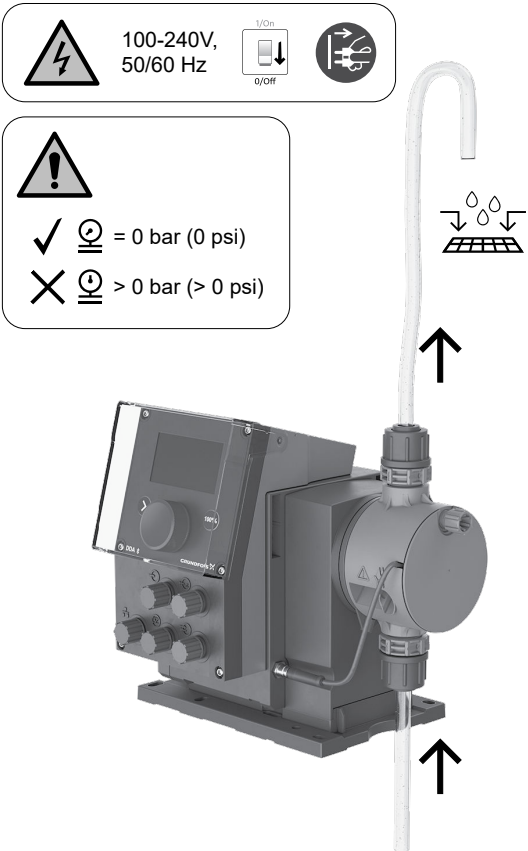

2.

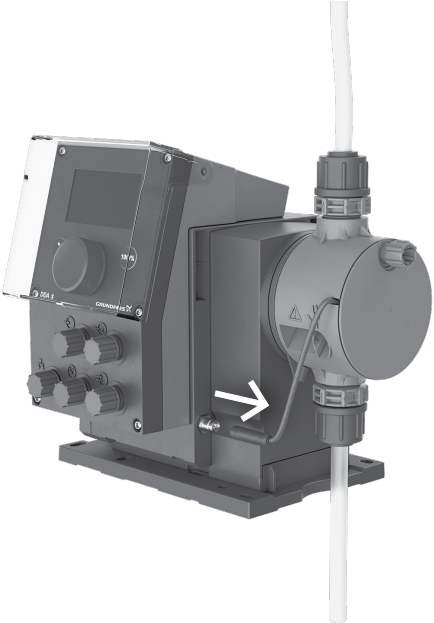

TM087899

3.

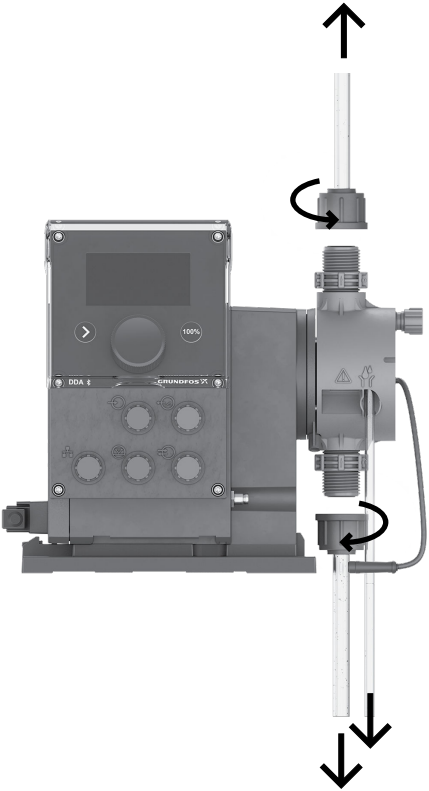

TM087900

4.

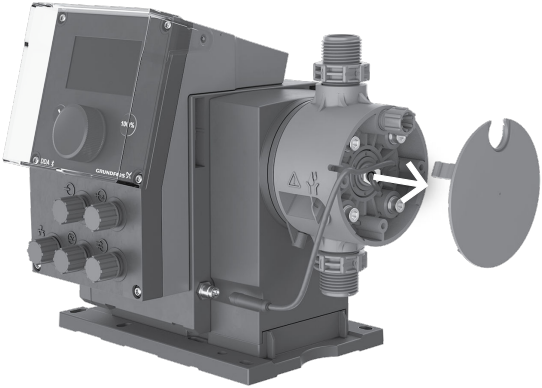

5.

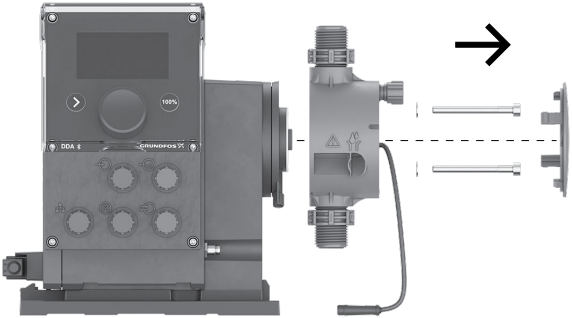

TM087902

4. Dismantling the pressure sensor

- 1

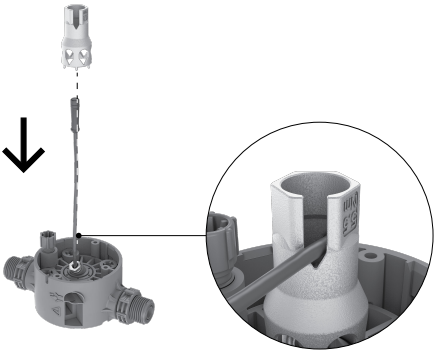

TM087903

- 2

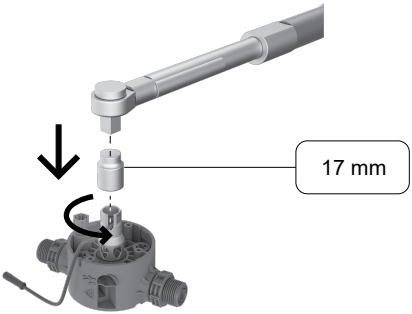

TM087904

•

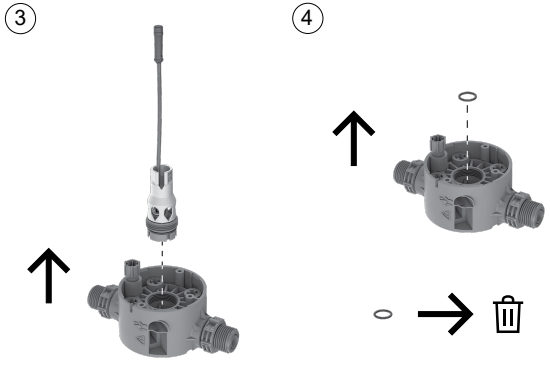

5. Assembling the pressure sensor

•

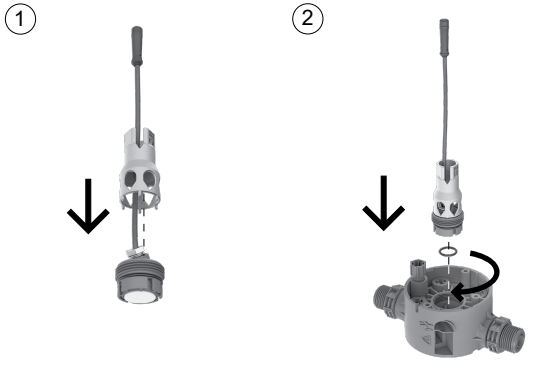

- 3

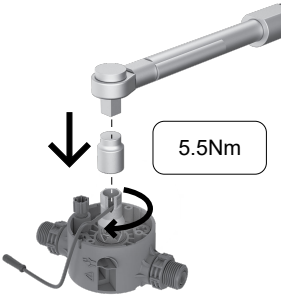

- 4

TIM087907

- 5

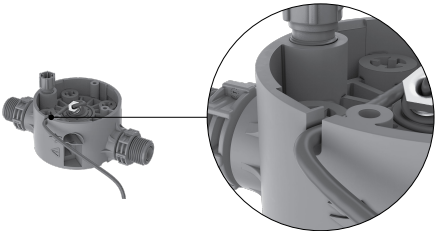

TIM087908

6. Assembling the dosing head

1.

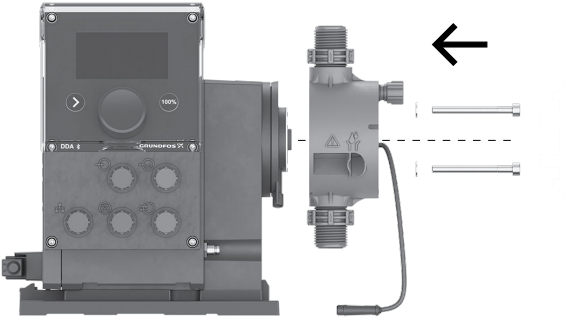

TM087909

2.

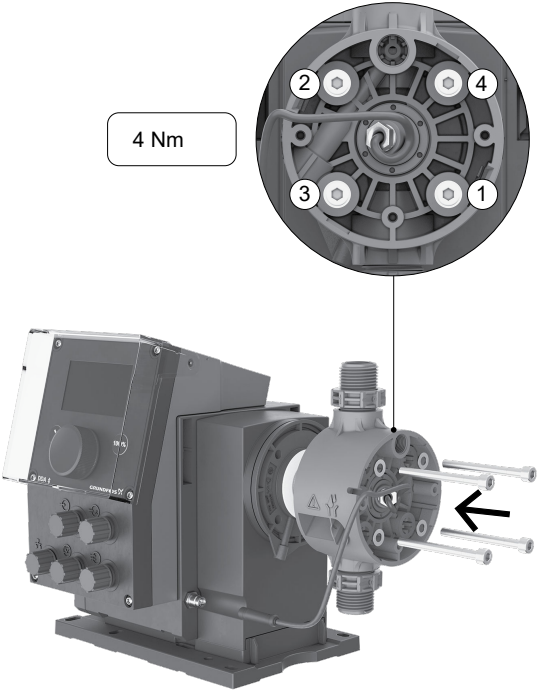

TM087910

3.

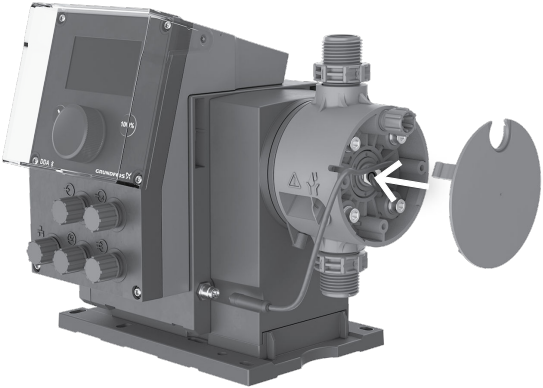

TM087911

4.

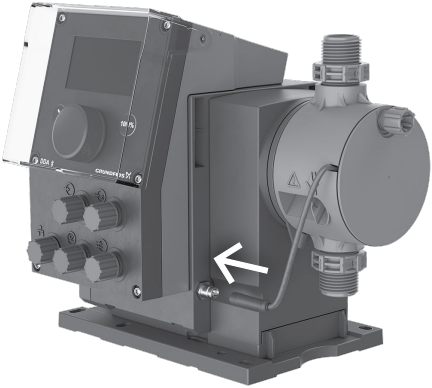

TM087912

7. Calibrating the pressure sensor

1.

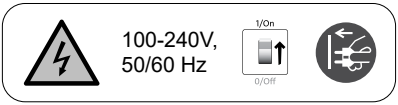

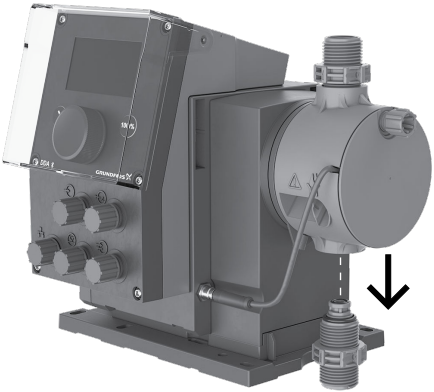

TM087913

2.

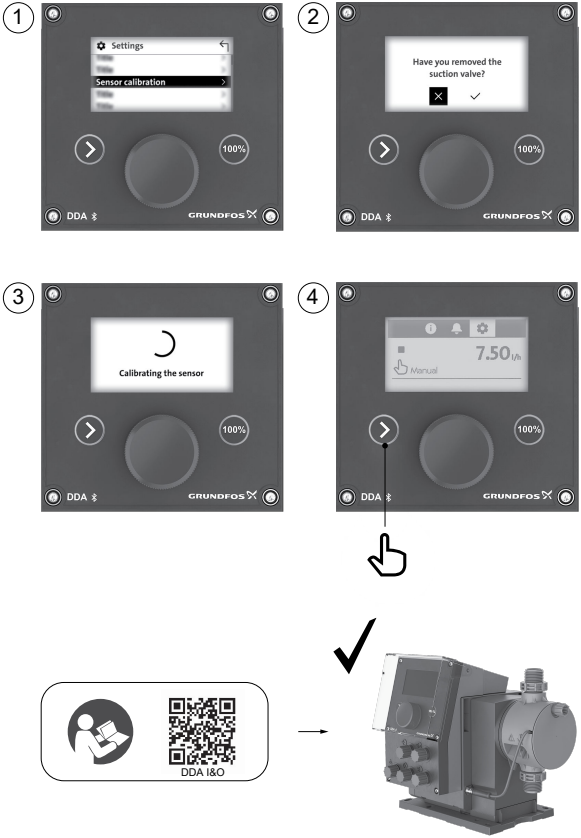
1
Settings
Sensor calibration
100%
DDA
GRUNDFOS
2
Have you removed the suction valve?
100%
DDA
GRUNDFOS
3
Calibrating the sensor
100%
DDA
GRUNDFOS
4
7.50 l/h
Manual
100%
DDA
GRUNDFOS
DDA I&O

TM087914

8. Connecting the valves and lines to the dosing head

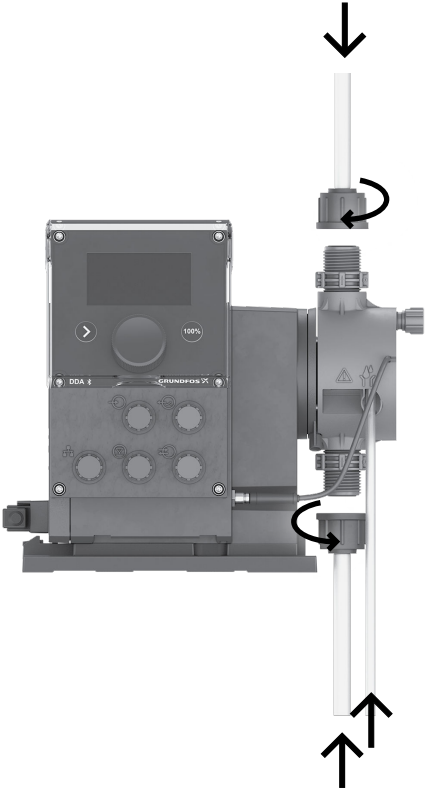

TM087915

Trademarks displayed in this material, including but not limited to Grundfos and the Grundfos logo, are registered trademarks owned by The Grundfos Group.
© 2025 Grundfos Holding A/S, all rights reserved.

93119772 **06. 2025**

ECM: 1427171