Safety instructions

PM START

PM START IO
Installation and operating instructions
(all available languages)
http://net.grundfos.com/qr/i/93093589

PM START QG
Quick guide
http://net.grundfos.com/qr/i/92949257

PM START

English (GB)
Safety instructions 4
EU declaration of conformity 7
UK declaration of conformity 9

English (GB) Safety instructions

Original safety instructions

These safety instructions give a quick overview of the safety precautions to be taken in connection with any work on this product. Observe these safety instructions during handling, installation, operation, maintenance, service and repair of this product. These safety instructions are a supplementary document, and all safety instructions will appear again in the relevant sections of the installation and operating instructions. Keep these safety instructions at the installation site for future reference.

General information

Appliances can be used by persons with reduced physical, sensory, or mental capabilities, as well as persons with a lack of experience and knowledge. This requires that they are given supervision or instruction concerning the use of the appliance in a safe way and that they understand the hazards involved. Cleaning and user maintenance shall not be carried out by children without supervision.

Read this document before you install the product. Installation and operation must comply with local regulations and accepted codes of good practice.

Electrical connection

WARNING
Electric shock
Death or serious personal injury

- Switch off the power supply before you start any work on the product. Make sure that the power supply cannot be switched on accidentally.

WARNING
Electric shock
Death or serious personal injury

- Connect the product to protective earth and provide protection against indirect contact in accordance with local regulations.
- Power cables without a plug must be connected to a supply disconnecting device incorporated in the fixed wiring according to the local wiring rules.
- The installation must be fitted with a residual-current device (RCD) with a tripping current less than 30 mA.
- The pressure manager must be connected to an external mains switch with a contact gap of at least 3 mm in all poles.

All electrical connections must be carried out by qualified persons in accordance with local regulations.

The product can be powered by a generator or other alternative power supplies, provided that the requirements for the power supply are fulfilled.

Connect products delivered with a power plug using the supplied cable and plug.
Connect products with no fitted cable and plug according to the following instructions:

1. Remove the operating panel from the front of the product.

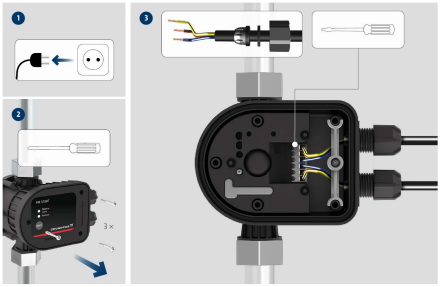

TM087723

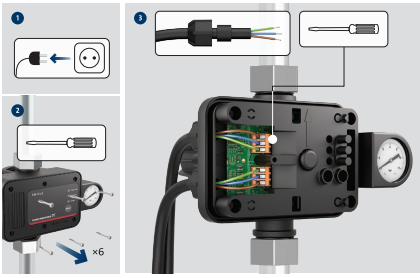

TM088825

2. Make the electrical connection according to the wiring diagram.

3. Fit the operating panel securely with all four mounting screws to maintain enclosure class IP65.

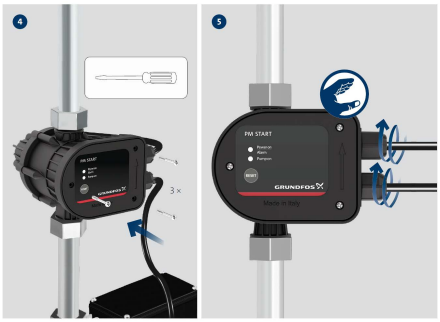

TM087724

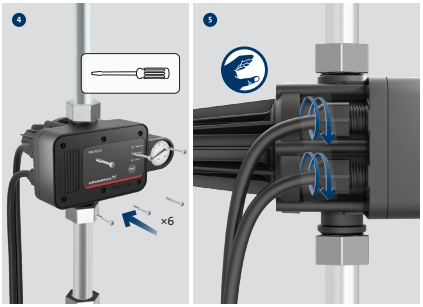

TM088826

Wiring diagrams

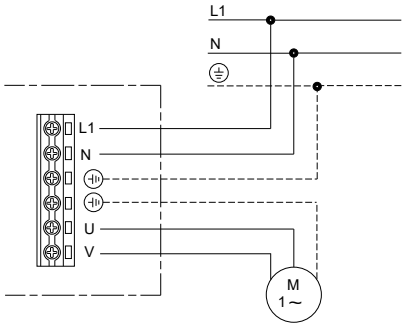

TM083771

Wiring diagram for one-phase pumps

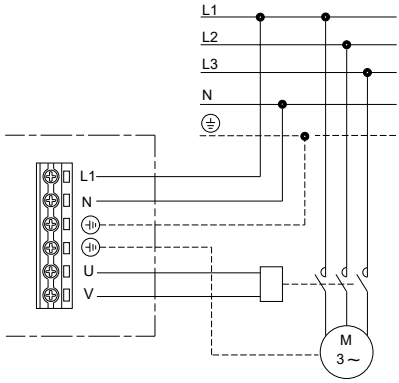

TM083773

Wiring diagram for three-phase pumps

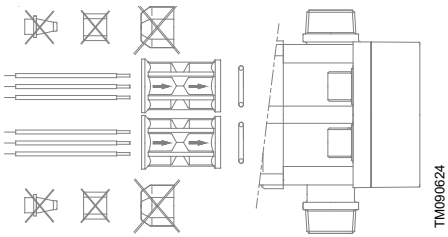

Wiring for flexible metal conduits

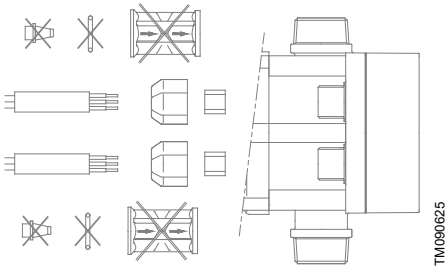

Wiring for liquid-tight cables

Fault finding

DANGER
Electric shock
Death or serious personal injury

- Before starting work on the pump or the pressure manager, make sure that the power supply has been switched off, and that it cannot be switched on accidentally.

Technical data

Supply voltage	1 × 230 VAC, ± 10 %, 50/60 Hz
	1 × 115 VAC, ± 10 %, 50/60 Hz
Ambient temperature	0-50 °C (122 °F)
Liquid temperature	0-60 °C (140 °F)
Max. current	10 A
Max. power at 115 VAC	1.1 kW (1.5 hp)
Max. power at 230 VAC	1.5 kW (2 hp)
Enclosure class	IP 65
Max. operating pressure	10 bar (145 psi)
Min. flow rate	≈ 1 l/min (0.26 gpm)
Pumped liquids	Clean water
Connection type	G1/NPT

Disposing of the product

This product or parts of it must be disposed of in an environmentally sound way.

1. Use the public or private waste collection service.
2. If this is not possible, contact the nearest Grundfos company or service workshop.

The crossed-out wheelie bin symbol on a product means that it must be disposed of separately from household waste. When a product marked with this symbol reaches its end of life, take it to a collection point designated by the local waste disposal authorities. The separate collection and recycling of such products will help protect the environment and human health.

See also end-of-life information at *www.grundfos.com/product-recycling*.

EU declaration of conformity

GB: EU declaration of conformity

We, Grundfos, declare under our sole responsibility that the products , to which the declaration below relates, are in conformity with the Council Directives listed below on the approximation of the laws of the EU member states.

BG: Декларация за съответствие на ЕС

Ние, Grundfos, декларираме с пълната си отговорност, че продуктите , за които се отнася настоящата декларация, отговарят на следните директиви на Съвета за уеднаквяване на правните разпоредби на държавите-членки на ЕС.

CZ: EU prohlášení o shodě

My společnost Grundfos prohlašujeme na svou plnou odpovědnost, že výrobky , YYY, na které se toto prohlášení vztahuje, jsou v souladu s níže uvedenými ustanoveními směrnice Rady pro sblížení právních předpisů členských států Evropské unie.

DE: EU-Konformitätserklärung

Wir, Grundfos, erklären in alleiniger Verantwortung, dass das Produkt , auf das sich diese Erklärung bezieht, mit den folgenden Richtlinien des Rates zur Angleichung der Rechtsvorschriften der EG-/EU-Mitgliedsstaaten übereinstimmt.

DK: EU-overensstemmelseserklæring

Vi, Grundfos, erklærer under ansvar at produkterne som erklæringen nedenfor omhandler, er i overensstemmelse med Rådets direktiver der er nævnt nedenfor, om indbyrdes tilnærmelse til EU-medlemsstaternes lovgivning.

ES: Declaración de conformidad UE

Grundfos declara, bajo su exclusiva responsabilidad, que los productos a los que concierne la presente declaración, marcados con la denominación , son conformes con las Directivas del Consejo que figuran a continuación, basadas en la aproximación de las legislaciones correspondientes de los Estados miembros de la UE.

FI: EY-vaatimustenmukaisuusvakuutus

Grundfos vakuuttaa omalla vastuullaan, että tuotteet , joita tämä vakuutus koskee, ovat EU:n jäsenvaltioiden lainsäädännön lähentämiseen tähtäävien Euroopan neuvoston direktiivien vaatimusten mukaisia seuraavasti.

FR : Déclaration de conformité UE

Nous, Grundfos, déclarons sous notre entière responsabilité que les produits auxquels la déclaration ci-dessous fait référence, sont conformes aux directives du Conseil répertoriées ci-dessous, concernant le rapprochement des législations des États membres de l'UE.

GR: Δήλωση συμμόρφωσης ΕΕ

Εμείς, η Grundfos, δηλώνουμε με αποκλειστικά δική μας ευθύνη ότι τα προϊόντα , στα οποία αναφέρεται η παρακάτω δήλωση, συμμορφώνονται με τις παρακάτω Οδηγίες του Συμβουλίου περί προσέγγισης των νομοθεσιών των κρατών μελών της ΕΕ.

HR: EU Izjava o usklađenosti

Mi, Grundfos, izjavljujemo s punom odgovornošću da su proizvodi na koja se izjava odnosi u nastavku, u skladu s direktivama Vijeća dolje navedene o usklađivanju zakona država članica EZ-a/EU-a.

HU: EU megfelelőségi nyilatkozat

Mi, a Grundfos vállalat, teljes felelősséggel kijelentjük, hogy a(z) termékek, amelyre az alábbi nyilatkozat vonatkozik, megfelelnek az Európai Unió tagállamainak jogi irányelveit összehangoló tanács alábbi előírásainak.

IT: Dichiarazione di conformità UE

Grundfos dichiara sotto la sua esclusiva responsabilità che i prodotti , ai quali si riferisce questa dichiarazione, sono conformi alle seguenti direttive del Consiglio riguardanti il riavvicinamento delle legislazioni degli Stati membri UE.

NL: EC Conformiteitsverklaring

Wij, Grundfos, verklaren geheel onder eigen verantwoordelijkheid dat de producten , waarop de onderstaande verklaring betrekking heeft, in overeenstemming zijn met de onderstaande Richtlijnen van de Raad inzake de onderlinge aanpassing van de wetgeving van de EU-lidstaten.

PL: Deklaracja zgodności WE

Firma Grundfos oświadcza z pełną odpowiedzialnością, że jej produkty , których dotyczy niniejsza deklaracja, są zgodne z następującymi dyrektywami Rady w sprawie zbliżenia przepisów prawnych państw członkowskich UE.

PT: Declaração de conformidade UE

A Grundfos declara sob sua única responsabilidade que os produtos , aos quais diz respeito a declaração abaixo, estão em conformidade com as Diretivas do Conselho sobre a aproximação das legislações dos Estados Membros da UE.

RO: Declarație de conformitate UE

Subscrisa, Grundfos, declară pe propria răspundere că produsele , la care se referă declarația de mai jos, sunt în conformitate cu Directivele Consiliului enumerate mai jos privind apropierea legislațiilor statelor membre UE.

SE: EU-försäkran om överensstämmelse

Vi, Grundfos, försäkrar under ansvar att produkterna , som omfattas av nedanstående försäkran, är i överensstämmelse med de rådsdirektiv om inbördes närmande till EU-medlemsstaternas lagstiftning som listas nedan.

SI: Izjava o skladnosti EU

V Grundfosu s polno odgovornostjo izjavljamo, da so izdelki , na katere se spodnja izjava nanaša, v skladu s spodnjimi direktivami Sveta o približevanju zakonodaje za izenačevanje pravnih predpisov držav članic EU.

SK: EÚ vyhlásenie o zhode

My, spoločnosť Grundfos, vyhlasujeme na svoju plnú zodpovednosť, že produkty , na ktoré sa vyhlásenie uvedené nižšie vzťahuje, sú v súlade s ustanoveniami nižšie uvedených smerníc Rady pre zblíženie právnych predpisov členských štátov EÚ.

TR: AB uygunluk beyanı

Grundfos olarak, aşağıdaki bildirim konusu olan ürünlerinin, AB üye ülkelerinin direktiflerinin yakınlaştırılmasıyla ilgili aşağıdaki Konsey Direktifleriyle uyumlu olduğunu ve bununla ilgili olarak tüm sorumluluğun bize ait olduğunu beyan ederiz.

- Low Voltage Directive (2014/35/EU).
  Standard used:
  EN 60730-1:2016
  EN 60730-2:2016.
- EMC: 2014/30/EU
  Standard used:
  EN 60730-1:2016.
- RoHS Directives (2011/65/EU and 2015/863/EU).
  Standards used:
  EN IEC 63000:2018.

This EU declaration of conformity is only valid when published as part of Grundfos installation and operating instructions.

Bjerringbro, 23 November 2022

Steen Tøffner-Clausen
Head of PD DBS
Grundfos Holding A/S
Poul Due Jensens Vej 7
8850 Bjerringbro, Denmark
www.grundfos.com

Person authorised to compile technical file and empowered to sign the EU declaration of conformity.

UK declaration of conformity

UK declaration of conformity

We, Grundfos, declare under our sole responsibility that the products to which the declaration below relates, are in conformity with UK regulations, standards and specifications to which conformity is declared, as listed below:

Valid for Grundfos products:

PM START, PM1, PM2, PM Twin

- Electrical Equipment (Safety) Regulations 2016

  Standards used: EN 61439-1:2011, EN 61439-2:2011
- Electromagnetic Compatibility Regulations 2016

  Standards used: EN 60730-1:2016
- The Restriction of the Use of Certain Hazardous Substances in Electrical and Electronic Equipment Regulations 2012

  Standards used: EN IEC 63000:2018

This UK declaration of conformity is only valid when accompanying Grundfos instructions.

UK Importer: Grundfos Pumps ltd. Grovebury Road, Leighton Buzzard, LU7 4TL.

Bjerringbro, 23 November 2022

Steen Tøffner-Clausen
Head of PD DBS
Grundfos Holding A/S
Poul Due Jensens Vej 7
8850 Bjerringbro, Denmark
www.grundfos.com
Manufacturer and person empowered to sign the UK declaration of conformity.
10000038480

Argentina
Bombas GRUNDFOS de Argentina S.A.
Ruta Panamericana km. 37.500industin
1619 - Garín Pcia. de B.A.
Tel.: +54-3327 414 444
Fax: +54-3327 45 3190

Australia
GRUNDFOS Pumps Pty. Ltd.
P.O. Box 2040
Regency Park
South Australia 5942
Tel.: +61-8-8461-4611
Fax: +61-8-8340-0155

Austria
GRUNDFOS Pumpen Vertrieb
Ges.m.b.H.
Grundfosstraße 2
A-5082 Grödig/Salzburg
Tel.: +43-6246-883-0
Fax: +43-6246-883-30

Belgium
N.V. GRUNDFOS Bellux S.A.
Boomsesteenweg 81-83
B-2630 Aartselaar
Tel.: +32-3-870 7300
Fax: +32-3-870 7301

Bosnia and Herzegovina
GRUNDFOS Sarajevo
Zmaja od Bosne 7-7A
BiH-71000 Sarajevo
Tel.: +387 33 592 480
Fax: +387 33 590 465
www.ba.grundfos.com
E-mail: grundfos@bih.net.ba

Brazil
BOMBAS GRUNDFOS DO BRASIL
Av. Humberto de Alencar Castelo
Branco, 630
CEP 09850 - 300
São Bernardo do Campo - SP
Tel.: +55-11 4393 5533
Fax: +55-11 4343 5015

Bulgaria
Grundfos Bulgaria EOOD
Slatina District
Iztochna Tangenta street no. 100
BG - 1592 Sofia
Tel.: +359 2 49 22 200
Fax: +359 2 49 22 201
E-mail: bulgaria@grundfos.bg

Canada
GRUNDFOS Canada inc.
2941 Brighton Road
Oakville, Ontario
L6H 6C9
Tel.: +1-905 829 9533
Fax: +1-905 829 9512

China
GRUNDFOS Pumps (Shanghai) Co. Ltd.
10F The Hub, No. 33 Suhong Road
Minhang District
Shanghai 201106 PRC
Tel.: +86 21 612 252 22
Fax: +86 21 612 253 33

Colombia
GRUNDFOS Colombia S.A.S.
Km 1.5 vía Siberia-Cota Conj. Potrero
Chico,
Parque Empresarial Arcos de Cota Bod.
1A.
Cota, Cundinamarca
Tel.: +57(1)-2913444
Fax: +57(1)-8764586

Croatia
GRUNDFOS CROATIA d.o.o.
Buzinski prilaz 38, Buzin
HR-10010 Zagreb
Tel.: +385 1 6595 400
Fax: +385 1 6595 499
www.hr.grundfos.com

Czech Republic
GRUNDFOS Sales Czechia and Slovakia
s.r.o.
Čajkovského 21
779 00 Olomouc
Tel.: +420-585-716 111

Denmark
GRUNDFOS DK A/S
Martin Bachs Vej 3
DK-8850 Bjerringbro
Tel.: +45-87 50 50 50
Fax: +45-87 50 51 51
E-mail: info_GDK@grundfos.com
www.grundfos.com/DK

Estonia
GRUNDFOS Pumps Eesti OÜ
Peterburi tee 92G
11415 Tallinn
Tel.: + 372 606 1690
Fax: + 372 606 1691

Finland
OY GRUNDFOS Pumput AB
Trukkikuja 1
FI-01360 Vantaa
Tel.: +358-(0) 207 889 500

France
Pompes GRUNDFOS Distribution S.A.
Parc d'Activités de Chesnes
57, rue de Malacombe
F-38290 St. Quentin Fallavier (Lyon)
Tel.: +33-4 74 82 15 15
Fax: +33-4 74 94 10 51

Germany
GRUNDFOS GMBH
Schlüterstr. 33
40699 Erkrath
Tel.: +49-(0) 211 929 69-0
Fax: +49-(0) 211 929 69-3799
E-mail: infoservice@grundfos.de
Service in Deutschland:
kundendienst@grundfos.de

Greece
GRUNDFOS Hellas A.E.B.E.
20th km. Athinon-Markopoulou Av.
P.O. Box 71
GR-19002 Peania
Tel.: +0030-210-66 83 400
Fax: +0030-210-66 46 273

Hong Kong
GRUNDFOS Pumps (Hong Kong) Ltd.
Unit 1, Ground floor, Siu Wai industrial
Centre
29-33 Wing Hong Street & 68 King Lam
Street, Cheung Sha Wan
Kowloon
Tel.: +852-27861706 / 27861741
Fax: +852-27858664

Hungary
GRUNDFOS South East Europe Kft.
Tópark u. 8
H-2045 Törökbálint
Tel.: +36-23 511 110
Fax: +36-23 511 111

India
GRUNDFOS Pumps India Private
Limited
118 Old Mahabalipuram Road
Thoraipakkam
Chennai 600 097
Tel.: +91-44 2496 6800

Indonesia
PT GRUNDFOS Pompa
Graha intirub Lt. 2 & 3
Jln. Cililitan Besar No.454. Makasar,
Jakarta Timur
ID-Jakarta 13650
Tel.: +62 21-469-51900
Fax: +62 21-460 6910 / 460 6901

Ireland
GRUNDFOS (Ireland) Ltd.
Unit A, Merrywell Business Park
Ballymount Road Lower
Dublin 12
Tel.: +353-1-4089 800
Fax: +353-1-4089 830

Italy
GRUNDFOS Pompe Italia S.r.l.
Via Gran Sasso 4
I-20060 Truccazzano (Milano)
Tel.: +39-02-95838112
Fax: +39-02-95309290 / 95838461

Japan
GRUNDFOS Pumps K.K.
1-2-3, Shin-Miyakoda, Kita-ku
Hamamatsu
431-2103 Japan
Tel.: +81 53 428 4760
Fax: +81 53 428 5005

Kazakhstan
Grundfos Kazakhstan LLP
7' Kyz-Zhibek Str., Kok-Tobe micr.
KZ-050020 Almaty Kazakhstan
Tel.: +7 (727) 227-98-55/56

Korea
GRUNDFOS Pumps Korea Ltd.
6th Floor, Aju Building 679-5
Yeoksam-dong, Kangnam-ku, 135-916
Seoul, Korea
Tel.: +82-2-5317 600
Fax: +82-2-5633 725

Latvia
SIA GRUNDFOS Pumps Latvia
Deglava biznesa centrs
Augusta Deglava ielā 60
LV-1035, Rīga,
Tel.: + 371 714 9640, 7 149 641
Fax: + 371 914 9646

Lithuania
GRUNDFOS Pumps UAB
Smolensko g. 6
LT-03201 Vilnius
Tel.: + 370 52 395 430
Fax: + 370 52 395 431

Malaysia
GRUNDFOS Pumps Sdn. Bhd.
7 Jalan Peguam U1/25
Glenmarie industrial Park
40150 Shah Alam, Selangor
Tel.: +60-3-5569 2922
Fax: +60-3-5569 2866

Mexico
Bombas GRUNDFOS de México
S.A. de C.V.
Boulevard TLC No. 15
Parque industrial Stiva Aeropuerto
Apodaca, N.L. 66600
Tel.: +52-81-8144 4000
Fax: +52-81-8144 4010

Netherlands
GRUNDFOS Netherlands
Veluwezoom 35
1326 AE Almere
Postbus 22015
1302 CA ALMERE
Tel.: +31-88-478 6336
Fax: +31-88-478 6332
E-mail: info_gnl@grundfos.com

New Zealand
GRUNDFOS Pumps NZ Ltd.
17 Beatrice Tinsley Crescent
North Harbour Industrial Estate
Albany, Auckland
Tel.: +64-9-415 3240
Fax: +64-9-415 3250

Norway
GRUNDFOS Pumper A/S
Strømsveien 344
Postboks 235, Leirdal
N-1011 Oslo
Tel.: +47-22 90 47 00
Fax: +47-22 32 21 50

Poland
GRUNDFOS Pompy Sp. z o.o.
ul. Klonowa 23
Baranowo k. Poznania
PL-62-081 Przeźmierowo
Tel.: (+48-61) 650 13 00
Fax: (+48-61) 650 13 50

Portugal
Bombas GRUNDFOS Portugal, S.A.
Rua Calvet de Magalhães, 241
Apartado 1079
P-2770-153 Paço de Arcos
Tel.: +351-21-440 76 00
Fax: +351-21-440 76 90

Romania
GRUNDFOS Pompe România SRL
S-PARK BUSINESS CENTER, Clădirea A2, etaj 2
Str. Tipografilor, Nr. 11-15, Sector 1, Cod 013714
Bucuresti, Romania
Tel.: 004 021 2004 100
E-mail: romania@grundfos.ro

Serbia
Grundfos Srbija d.o.o.
Omladinskih brigada 90b
11070 Novi Beograd
Tel.: +381 11 2258 740
Fax: +381 11 2281 769
www.rs.grundfos.com

Singapore
GRUNDFOS (Singapore) Pte. Ltd.
25 Jalan Tukang
Singapore 619264
Tel.: +65-6681 9688
Faxax: +65-6681 9689

Slovakia
GRUNDFOS s.r.o.
Prievozská 4D 821 09 BRATISLAVA
Tel.: +421 2 5020 1426
sk.grundfos.com

Slovenia
GRUNDFOS LJUBLJANA, d.o.o.
Leskoškova 9e, 1122 Ljubljana
Tel.: +386 (0) 1 568 06 10
Fax: +386 (0)1 568 06 19
E-mail: tehnika-si@grundfos.com

South Africa
GRUNDFOS (PTY) LTD
16 Lascelles Drive, Meadowbrook Estate
1609 Germiston, Johannesburg
Tel.: (+27) 10 248 6000
Fax: (+27) 10 248 6002
E-mail: lgradidge@grundfos.com

Spain
Bombas GRUNDFOS España S.A.
Camino de la Fuentecilla, s/n
E-28110 Algete (Madrid)
Tel.: +34-91-848 8800
Fax: +34-91-628 0465

Sweden
GRUNDFOS AB
Box 333 (Lunnagårdsgatan 6)
431 24 Mölndal
Tel.: +46 31 332 23 000
Fax: +46 31 331 94 60

Switzerland
GRUNDFOS Pumpen AG
Bruggacherstrasse 10
CH-8117 Fällanden/ZH
Tel.: +41-44-806 8111
Fax: +41-44-806 8115

Taiwan
GRUNDFOS Pumps (Taiwan) Ltd.
7 Floor, 219 Min-Chuan Road
Taichung, Taiwan, R.O.C.
Tel.: +886-4-2305 0868
Fax: +886-4-2305 0878

Thailand
GRUNDFOS (Thailand) Ltd.
92 Chaloem Phrakiat Rama 9 Road
Dokmai, Pravej, Bangkok 10250
Tel.: +66-2-725 8999
Fax: +66-2-725 8998

Turkey
GRUNDFOS POMPA San. ve Tic. Ltd. Sti.
Gebze Organize Sanayi Bölgesi
Ihsan dede Caddesi
2. yol 200. Sokak No. 204
41490 Gebze/ Kocaeli
Tel.: +90 - 262-679 7979
Fax: +90 - 262-679 7905
E-mail: satis@grundfos.com

Ukraine
ТОВ "ГРУНДФОС УКРАЇНА"
Бізнес Центр Європа
Столичне шосе, 103
м. Київ, 03131, Україна
Tel.: (+38 044) 237 04 00
Fax: (+38 044) 237 04 01
E-mail: ukraine@grundfos.com

United Arab Emirates
GRUNDFOS Gulf Distribution
P.O. Box 16768
Jebel Ali Free Zone, Dubai
Tel.: +971 4 8815 166
Fax: +971 4 8815 136

United Kingdom
GRUNDFOS Pumps Ltd.
Grovebury Road
Leighton Buzzard/Beds. LU7 4TL
Tel.: +44-1525-850000
Fax: +44-1525-850011

U.S.A.
Global Headquarters for WU
856 Koomey Road
Brookshire, Texas 77423 USA
Phone: +1-630-236-5500

Uzbekistan
Grundfos Tashkent, Uzbekistan
The Representative Office of Grundfos Kazakhstan in Uzbekistan
38a, Oybek street, Tashkent
Tel.: (+998) 71 150 3290 / 71 150 3291
Fax: (+998) 71 150 3292

© Grundfos Holding A/S 01.2026

93093604

ECM: 1443924	02.2026

Grundfos Holding A/S
Poul Due Jensens Vej 7
DK-8850 Bjerringbro
Tel: +45 87 50 14 00
www.grundfos.com