Hydro Multi-E

Systems with 2 to 4 CRE, CRIE or 2 to 3 CME pumps

Safety instructions and other important information

Hydro Multi-E
Installation and operating instructions
(all available languages)
http://net.grundfos.com/qr/i/98491894

Hydro Multi-E

English (GB)

Safety instructions 4
Appendix A 7
EU declaration of conformity 8
UK declaration of conformity 10
Ukrainian declaration of conformity 11
Moroccan declaration of conformity 12

Original safety instructions

These safety instructions give a quick overview of the safety precautions to be taken in connection with any work on this system. Observe these safety instructions during handling, installation, operation, maintenance, service and repair of this system. These safety instructions are a supplementary document, and all safety instructions will appear again in the relevant sections of the installation and operating instructions. Keep these safety instructions at the installation site for future reference.

General information

Read this document and the online version of the installation and operating instructions before you install the system. Installation and operation must comply with local regulations and accepted codes of good practice.

Handling and lifting the system

Only lift the system with the manifolds mounted to prevent the base frame from bending if the weight of the pumps are too high.

DANGER
Overhead load
Death or serious personal injury
- Do not use the eyebolts of the motors when you lift the system.
- Do not lift the system by the manifolds.

DANGER
Fall hazard
Death or serious personal injury
- Do not stand on the manifolds.

WARNING
Overhead load
Death or serious personal injury
- Do not stand under or close to the load that is lifted.
- Comply with local regulations when you lift or handle the system.

WARNING
Crushing of feet
Death or serious personal injury
- Before you lift the system, make sure that the lifting equipment is capable of handling the load, as listed on the nameplate and packaging label.

CAUTION
Overhead load
Minor or moderate personal injury
- Use appropriate lifting equipment when you place the system.

When you lift the system, the lifting point must always be above the center of gravity to ensure stability.

Systems with a base frame made of bent steel plate are designed with holes in the base frame for lifting.

- Use certified lifting gear suitable for the load. Each lifting strap must be at least 3 m long. Straps must be placed to ensure vertical pull to the system.
- Wind the safety strap around the pump head more than one time if there are no eyebolts or brackets on the pump.
- Keep the safety strap tight.
- Use shackles mounted in the holes for lifting the systems with a base frame made of bent steel plate.

If the system is secured with transport straps, do not remove the straps until the system is installed.

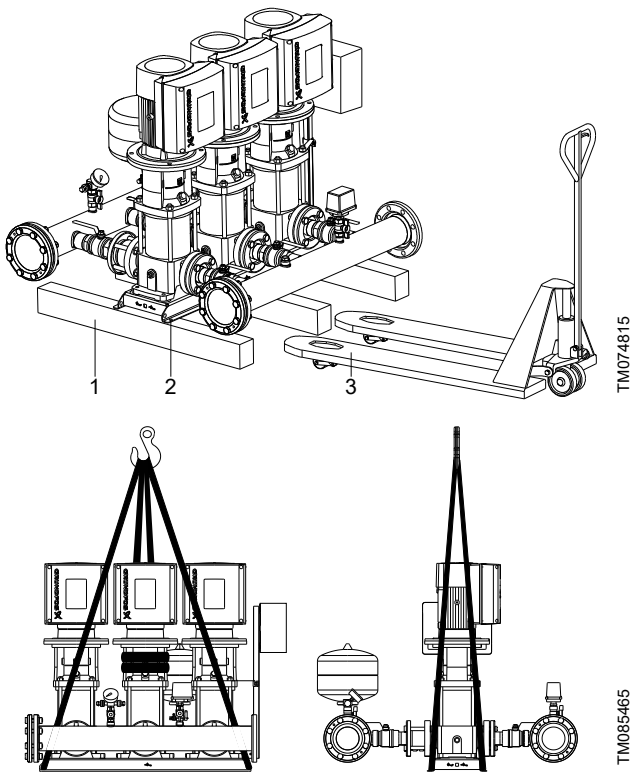

Lifting a system with a base frame made of bent steel plate

Pos.	Description
1	Wooden beam (included)
2	Wooden screws (included)
3	Forklift

Installing the system

WARNING
Crushing
Death or serious personal injury
- Use professional installation tools when you move or lift the system or its components.
- Use safety equipment when you mount the base frame.
- Use the supplied wooden beams to support the system when you mount the vibration dampers.
- Only trained persons can carry out the installation.

CAUTION
Overhead load
Minor or moderate personal injury
- Use appropriate lifting equipment when you place the system.

CAUTION
Crushing of feet
Minor or moderate personal injury
- Use safety equipment when you install the pipes and the tank.

CAUTION
Sharp element
Minor or moderate personal injury
- Wear safety gloves.

Electrical connection

DANGER
Electric shock
Death or serious personal injury
- Disconnect the power supply and make sure that the power supply cannot be accidentally switched on.
- Make sure that the wires connected to the connection groups are separated from each other by reinforced insulation along their entire lengths.

WARNING
Electric shock
Death or serious personal injury
- All electrical connections must be carried out by qualified persons and according to local regulations.

Electrical supply system

DANGER
Electric shock
Death or serious personal injury
- Connect the system to protective earth and provide protection against indirect contact in accordance with local regulations.

Functional module, FM300

Functional module, FM310 and FM311

DANGER
Electric shock
Death or serious personal injury
- Make sure that the wires to be connected to the relays below are separated from each other by reinforced insulation along their entire lengths.

Starting up the system

DANGER
Electric shock
Death or serious personal injury
- Disconnect the power supply and wait at least five minutes before you make any connections in the breaker cabinet or control panel.
- Before you start the system, make sure that the power supply is disconnected and cannot be accidentally switched on.
- Tighten the wire connections.

DANGER
Electric shock
Death or serious personal injury
- Connect the motor to protective earth and provide protection against indirect contact according to local regulations.
- Before you start the system, make sure that there is no short-circuit.

WARNING
Contaminated drinking water
Death or serious personal injury
- Flush the system before you start it in compliance with local legislation.

WARNING
High temperature
Death or serious personal injury
- Before you operate, make sure that the system can handle the load specified on the nameplate.

CAUTION
Hot surface
Minor or moderate personal injury
- Make sure that the escaping hot liquid does not cause injury to persons or damage to the equipment.
- Do not touch wet components.

CAUTION
High noise level
Minor or moderate personal injury
- Use ear protection.

CAUTION
Sharp element
Minor or moderate personal injury
- Wear safety gloves.

Control functions

WARNING
Hot surface
Death or serious personal injury
- Touch only the buttons on the operating panel. The product may be very hot.

WARNING
Electric shock
Death or serious personal injury
- If the operating panel is cracked or perforated, replace it immediately. Contact the nearest Grundfos sales company.

Servicing the system

DANGER
Electric shock
Death or serious personal injury
- Before you maintain the system, make sure that the power supply is disconnected and cannot be accidentally switched on.

WARNING
Contaminated drinking water
Death or serious personal injury
- Flush the system after a standstill period in compliance with local legislation.

WARNING
Overhead load
Death or serious personal injury
- Wear a safety helmet.

CAUTION
Overhead load
Minor or moderate personal injury
- Use appropriate tools and lifting equipment for maintenance.

Taking the system out of operation

DANGER
Electric shock
Death or serious personal injury
- Make sure that the power supply is disconnected and cannot be accidentally switched on.

Startup the system after standstill

WARNING
Contaminated drinking water
Death or serious personal injury
- Flush the system after a standstill period in compliance with local legislation.

Fault finding

DANGER
Electric shock
Death or serious personal injury
- Switch off the power supply and wait at least five minutes before you make any connections in the breaker cabinet or control panel.
- Make sure that the power supply is disconnected and cannot be accidentally switched on.

Precautions for disposal

DANGER
Electric shock
Death or serious personal injury
- Before you dismantle the system, make sure that the power supply is disconnected and cannot be accidentally switched on.

WARNING
Crushing of feet
Death or serious personal injury
- Before you lift the system, make sure that the lifting equipment is capable of handling the load, as listed on the nameplate and packaging label.

WARNING
Hot surface
Death or serious personal injury
- Before you dismantle the system, make sure that the system cools down.

CAUTION
Overhead load
Minor or moderate personal injury
- When you dismantle the system, use safety equipment.

CAUTION
Sharp element
Minor or moderate personal injury
- When you dismantle the system, use safety gloves.

Disposing of the system

This system or its components must be disposed of in an environmentally sound way:

1. Use the public or private waste collection service.
2. If this is not possible, contact the nearest Grundfos company or service workshop.

A.1. 中国 RoHS

产品中有害物质的名称及含有信息表

部件名称	有害物质									
	铅 (Pb)	汞 (Hg)	镉 (Cd)	六价铬 (Cr6+)	多溴联苯 (PBBs)	多溴二苯醚 (PBDEs)	邻苯二甲酸二正丁酯（DBP）	邻苯二甲酸二异丁酯 (DIBP)	邻苯二甲酸丁基苄酯（BBP）	邻苯二甲酸二（2-乙基）己酯（DEHP）
泵壳	X	O	O	O	O	O	O	O	O	O
印刷电路板	X	O	O	O	O	O	O	O	O	O
紧固件	X	O	O	O	O	O	O	O	O	O
管件	X	O	O	O	O	O	O	O	O	O
定子	X	O	O	O	O	O	O	O	O	O
转子	X	O	O	O	O	O	O	O	O	O

注 1：O：表示该有害物质在该部件所有均质材料中的含量均不超出电器电子产品有害物质限制使用国家标准要求。
X：表示该有害物质至少在该部件的某一均质材料中含量超出电器电子产品有害物质限制使用国家标准要求。
注 2：以上未列出的部件，表明其有害物质含量均不超出电器电子产品有害物质限制使用国家标准要求。

EU declaration of conformity

GB: EU declaration of conformity

For products with CE marking on the nameplate.

We, Grundfos, declare under our sole responsibility that products (1) declared below are in conformity with the relevant union harmonisation legislation (2), harmonised standards or other technical specifications (3).

This declaration of conformity refers to the Grundfos document: 99743071

DE: EU-Konformitätserklärung

Für Produkte mit CE-Kennzeichnung auf dem Typenschild.

Wir, Grundfos, erklären in alleiniger Verantwortung, dass die Produkte (1), auf die sich die folgende Erklärung bezieht, den nachstehend genannten Harmonisierungsrechtsvorschriften (2), Normen und Spezifikationen (3) der EU entspricht.

Diese Konformitätserklärung bezieht sich auf das Grundfos-Dokument: 99743071

ES: Declaración de conformidad UE

Para productos con marcado CE en la placa de características

Grundfos declara, bajo su exclusiva responsabilidad, que los productos (1) que a continuación se detallan son conformes con la legislación (2), las normas u otras especificaciones técnicas (3) armonizadas de la Unión que correspondan.

La presente declaración de conformidad concierne al siguiente documento de Grundfos: 99743071

IT: Dichiarazione di conformità UE

Per prodotti con marcatura CE sulla targhetta.

Grundfos dichiara sotto la propria esclusiva responsabilità che i prodotti (1) dichiarati di seguito sono conformi alla pertinente normativa di armonizzazione dell'Unione (2), alle norme armonizzate o ad altre specifiche tecniche (3).

La presente dichiarazione di conformità fa riferimento al documento Grundfos: 99743071

PL: Deklaracja zgodności WE

Dla produktów z oznaczeniem CE na tabliczce znamionowej.

Firma Grundfos oświadcza z pełną odpowiedzialnością, że produkty (1), których dotyczy niniejsza deklaracja, są zgodne z odpowiednimi unijnymi przepisami harmonizacyjnymi (2), normami zharmonizowanymi lub innymi specyfikacjami technicznymi (3).

Niniejsza deklaracja zgodności odnosi się do dokumentu Grundfos: 99743071

RO: Declarație de conformitate UE

Pentru produsele cu marcaj CE pe plăcuța de identificare.

Subscrisa, Grundfos, declară pe propria răspundere că produsele (1) menționate mai jos sunt în conformitate cu legislația relevantă de armonizare a Uniunii Europene (2), cu standardele armonizate sau cu alte specificații tehnice (3).

Această declarație de conformitate se referă la documentul Grundfos: 99743071

SK: EÚ vyhlásenie o zhode

Pre výrobky s označením CE na typovom štítku.

My, spoločnosť Grundfos, vyhlasujeme na svoju plnú zodpovednosť, že nižšie uvedené výrobky (1) sú v súlade s príslušnými harmonizačnými právnymi predpismi (2), harmonizačnými normami alebo inými technickými špecifikáciami (3) Európskej únie.

Toto vyhlásenie o zhode odkazuje na dokument spoločnosti Grundfos: 99743071

UA: Декларація відповідності EU

Для виробів з маркуванням CE на заводській табличці.

Ми, компанія Grundfos, під нашу виключну відповідальність заявляємо, що виріб (1), до якого відноситься нижченаведена декларація, відповідає вимогам дійсного гармонізованого законодавства Союзу (2), гармонізованим стандартам і будь-яким технічним умовам (3).

Ця декларація відповідності відноситься до документа компанії Grundfos: 99743071

CZ: EU prohlášení o shodě

Pro výrobky s označením CE na typovém štítku.

My společnost Grundfos prohlašujeme na svou plnou odpovědnost, že níže uvedené výrobky (1) jsou v souladu s příslušnými harmonizačními právními předpisy (2), harmonizačními normami nebo jinými technickými specifikacemi (3) Evropské unie.

Toto prohlášení o shodě odkazuje na dokument společnosti Grundfos: 99743071

DK: EU-overensstemmelseserklæring

For produkter med CE-mærkning på typeskiltet.

Vi, Grundfos, erklærer på eget ansvar, at produkter (1) der er angivet nedenfor, er i overensstemmelse med den relevante EU-harmoniseringslovgivning (2), harmoniserede standarder eller andre tekniske specifikationer (3).

Denne overensstemmelseserklæring henviser til Grundfos-dokumentet: 99743071

FR : Déclaration de conformité UE

Pour les produits avec marquage CE sur la plaque signalétique.

Nous, Grundfos, déclarons sous notre seule responsabilité que les produits (1) déclarés ci-dessous sont conformes à la législation d'harmonisation (2), aux normes harmonisées ou à d'autres spécifications techniques (3).

Cette déclaration de conformité fait référence au document Grundfos : 99743071

NL: EC Conformiteitsverklaring

Voor producten met CE-markering op het typeplaatje.

Wij, Grundfos, verklaren op eigen verantwoordelijkheid dat de hieronder vermelde producten (1) in overeenstemming zijn met de relevante harmonisatiewetgeving van de Unie (2), geharmoniseerde normen of andere technische specificaties (3).

Deze conformiteitsverklaring verwijst naar het Grundfos-document: 99743071

PT: Declaração de conformidade UE

Para produtos com marcação CE na chapa de características.

A Grundfos declaramos sob sua única responsabilidade que os produtos (1) declarados abaixo estão em conformidade com a legislação de harmonização (2), as normas de harmonização ou outras especificações técnicas (3) relevantes da União.

Esta declaração de conformidade refere-se ao documento Grundfos: 99743071

SE: EU-försäkran om överensstämmelse

För produkter med CE-märkning på typskylten.

Vi, Grundfos, försäkrar under vårt eget ansvar att produkter (1) som deklareras nedan överensstämmer med gällande harmoniseringslagstiftning (2), harmoniserade standarder eller andra tekniska specifikationer (3).

Denna försäkran om överensstämmelse hänvisar till Grundfos-dokumentet: 99743071

TR: AB uygunluk beyanı

Etiketinde CE işareti bulunan ürünler için.

Grundfos olarak, aşağıdaki beyan edilen ürünlerin (1) ilgili birlik uyum mevzuatı (2), uyumlaştırılmış standartlar veya diğer teknik özellikler (3) ile uyumlu olduğunu tüm sorumluluk bize ait olmak üzere beyan ederiz.

Bu uygunluk beyanı, Grundfos dokümanıyla ilgilidir: 99743071

CN:欧盟符合性声明

对于铭牌上带有 CE 标识的产品。

格兰富公司郑重宣布，以下声明的产品 (1) 符合欧盟统一的立法 (2)、协调标准或其他技术规格 (3)。

本符合性声明是指格兰富文档： 99743071

Grundfos Holding A/S
Poul Due Jensens Vej 7
8850 Bjerringbro, Denmark
www.grundfos.com

Hydro Multi-E (1)

Union harmonisation legislation (2)
Harmonised standards or other technical specifications (3)

- **2006/42/EC** and **2009/127/EC** (Machinery Directive)
  EN 809:1998+A1:2009
- **2009/125/EC** (ErP Directive)
- **2011/65/EU** and **2015/863/EU** (RoHS Directive)
  EN IEC 63000:2018
- **2014/53/EU** and **(EU) 2022/30** (Radio Equipment Directive)
  EN 61439-1:2011, EN 62311:2020, EN 61326-1:2021, EN 301 489-1 V2.2.3, EN 301 489-17 V3.2.4, EN 301 489-52 V1.2.1, EN 300 328 V2.2.2, EN 301 908-1 V15.2.1, EN 301 908-13 V13.2.1, EN 18031-1:2024

Bjerringbro, August 26, 2025

Claus Gade
Head of Systems, PD, CBS

10000081721

UK declaration of conformity

UK declaration of conformity

We, Grundfos, declare under our sole responsibility that the products to which the declaration below relates, are in conformity with UK regulations, standards and specifications to which conformity is declared, as listed below:

Valid for Grundfos products:

Hydro Multi-E

- Supply of Machinery (Safety) Regulations 2008
  Standards used: EN 809: 1998 + A1: 2009
- Radio Equipment Regulations 2017
  Standards used: EN 61439-1:2011, 61439-2:2011, EN 301 489-1 V2.2.0, EN 301 489-52 V1.1.0, EN 301 511 V12.5.1, EN 301 908-1 V11.1.1, EN 301 908-2 V11.1.1, EN 301 908-13 V11.1.2
- The Ecodesign for Energy-Related Products and Energy Information (Amendment) (EU Exit) Regulations 2019
  Motors:
  Regulation (EC) No 640/2009
  Standards used: EN 60034-2-1:2007
  Water pumps:
  Regulation No 547/2012.
  Applies only to water pumps marked with the minimum efficiency index MEI. See pump nameplate.

This UK declaration of conformity is only valid when accompanying Grundfos safety instructions (publication number 99743071).

Bjerringbro, December 22nd 2021

Joachim Krogshave
Head of PD CBS
Grundfos Holding A/S
Poul Due Jensens Vej 7
8850 Bjerringbro, Denmark
www.grundfos.com
Manufacturer and person empowered to sign the UK declaration of conformity.
10000424960

GB: Ukrainian declaration of conformity

We, Grundfos, declare under our sole responsibility that the products to which the declaration below relates, are in conformity with Ukrainian resolutions, standards and specifications to which conformity is declared, as listed below:

Valid for Grundfos products:

Hydro Multi-E

Resolution No. 62, 2013 - Technical Regulations on Safety of Machines

Resolution No. 533, 2018 - Amendments to some provisions

Standards used: ДСТУ EN 809:2015

Resolution No 804, 2018 - Establishing a Framework for the Setting of Ecodesign Requirements for Energy-related Products

Resolution No. 139, 2017 - Technical Regulations on Use of Certain Hazardous Substances in Electrical and Electronic Equipment

Standards used: ДСТУ EN IEC 63000:2020

Resolution No. 1077, 2015 - Technical Regulations on Electromagnetic Compatibility

Standards used: ДСТУ EN 61326-1:2016, ДСТУ EN 61000-3-2:2016, ДСТУ EN 61000-3-3:2017

Resolution No. 355, 2017 - Technical Regulation on Radio Equipment

Standards used: ДСТУ EN 61439-1:2016, ДСТУ EN 61439-2:2016, ДСТУ ETSI EN 301 489-1:2019, ДСТУ ETSI EN 301 511:2016, ДСТУ ETSI EN 301 908-1:2018, ДСТУ ETSI EN 301 908-2:2017, ДСТУ ETSI EN 301 908-13:2018

This Ukrainian declaration of conformity is only valid when accompanying Grundfos instructions. 99743071

UA: Українська декларація відповідності

Ми, Grundfos, заявляємо про свою виключну відповідальність за те, що продукція, до якої відноситься ця декларація, відповідає вимогам українським постановам, стандартам та технічним умовам, щодо яких заявлена відповідність, як зазначено нижче:

Дійсно для продуктів Grundfos:

Hydro Multi-E

Постанова № 62 від 2013 р., Про затвердження Технічного регламенту безпеки машин

Постанова № 533 від 2018 р., Про внесення змін до деяких положень

Застосовані стандарти: ДСТУ EN 809:2015

Постанова № 804 від 2018 р., Встановлення системи для визначення вимог з екодизайну енергоспоживчих продуктів

Постанова № 139 від 2017 р., Технічний регламент обмеження використання деяких небезпечних речовин в електричному та електронному обладнанні

Застосовані стандарти: ДСТУ EN IEC 63000:2020

Постанова № 1077 від 2015 р., Технічний регламент з електромагнітної сумісності обладнання

Застосовані стандарти: ДСТУ EN 61326-1:2016, ДСТУ EN 61000-3-2:2016, ДСТУ EN 61000-3-3:2017

Постанова № 355 від 2017 р., Технічний регламент радіообладнання

Застосовані стандарти: ДСТУ EN 61439-1:2016, ДСТУ EN 61439-2:2016, ДСТУ ETSI EN 301 489-1:2019, ДСТУ ETSI EN 301 511:2016, ДСТУ ETSI EN 301 908-1:2018, ДСТУ ETSI EN 301 908-2:2017, ДСТУ ETSI EN 301 908-13:2018

Ця українська декларація відповідності дійсна лише за наявності інструкцій Grundfos. 99743071

Bjerringbro, 24th October 2022

Joachim Krogshave
Head of PD CBS
Grundfos Holding A/S
Poul Due Jensens Vej 7
8850 Bjerringbro, Denmark
www.grundfos.com

GB: Manufacturer and person empowered to sign the Ukrainian declaration of conformity

UA: Виробник та особа, уповноважена підписати українську декларацію відповідності

[10000469293]

Moroccan declaration of conformity

GB: Moroccan declaration of conformity

We, Grundfos, declare under our sole responsibility that the products to which the declaration below relates, are in conformity with Moroccan laws, orders, standards and specifications to which conformity is declared, as listed below:

Valid for Grundfos products:

Hydro Multi-E

Law No 24-09, 2011 Safety of products and services and the following orders:

Order No 2573-14, 2015 Safety Requirements for Low Voltage Electrical Equipment

Standards used: NM EN 809+A1:2015, NM EN 61800-5-1:2014

Order No 2574-14, 2015 Electromagnetic Compatibility

Standards used: NM EN 61800-3:2018, NM EN 62479:2015

This Moroccan declaration of conformity is only valid when accompanying Grundfos instructions.

FR : Déclaration de conformité marocaine

Nous, Grundfos, déclarons sous notre seule responsabilité que les produits auxquels se réfère la déclaration ci-après sont conformes aux lois, arrêtés, normes et spécifications marocains pour lesquels la conformité est déclarée, tels qu'énumérés ci-dessous :

Valable pour les produits Grundfos :

Hydro Multi-E

Loi n° 24-09 de 2011 relative à la sécurité des produits et des services et les arrêtés suivants :

Arrêté n° 2573-14 de 2015 relatif au matériel électrique destiné à être utilisé dans certaines limites de tension

Normes utilisées : NM EN 809+A1:2015, NM EN 61800-5-1:2014

Arrêté n° 2574-14 de 2015 relatif à la compatibilité électromagnétique des équipements

Normes utilisées : NM EN 61800-3:2018, NM EN 62479:2015

Cette déclaration de conformité marocaine est uniquement valide lorsqu'elle accompagne les notices Grundfos.

بريطانيا العظمى: إقرار المطابقة المغربي

نقر نحن، جروندفوس، بمقتضى مسؤوليتنا وحدنا بأن المنتجات التي يتعلق بها الإقرار أدناه، تتوافق مع القوانين والقرارات والمعايير والمواصفات المغربية التي تم إقرار المطابقة بشأنها، كما هو موضح أدناه:

سارٍ على منتجات جروندفوس:

Hydro Multi-E

قانون رقم 24-09، 2011 بشأن سلامة المنتجات والخدمات والقرارات التالية:

القرار رقم 2573-14، 2015 بشأن متطلبات السلامة للمعدات الكهربائية ذات الجهد المنخفض

المعايير المستخدمة: NM EN 809+A1:2015, NM EN 61800-5-1:2014

القرار رقم 2574-14، 2015 بشأن التوافق الكهرومغناطيسي

المعايير المستخدمة: NM EN 61800-3:2018, NM EN 62479:2015

يكون إقرار المطابقة المغربي هذا صالحًا فقط عند إرفاق تعليمات جروندفوس.

Bjerringbro, 22nd December 2021

Joachim Krogshave
Head of PD CBS
Grundfos Holding A/S
Poul Due Jensens Vej 7
8850 Bjerringbro, Denmark
www.grundfos.com

GB: Manufacturer and person empowered to sign the Moroccan declaration of conformity.

FR : Fabricant et personne habilitée à signer la Déclaration de conformité marocaine.

بريطانيا العظمى: الجهة المصنعة والشخص المفوض بتوقيع إقرار المطابقة المغربي.

10000424959

Argentina
Bombas GRUNDFOS de Argentina S.A.
Ruta Panamericana km. 37.500industin
1619 - Garín Pcia. de B.A.
Tel.: +54-3327 414 444
Fax: +54-3327 45 3190

Australia
GRUNDFOS Pumps Pty. Ltd.
P.O. Box 2040
Regency Park
South Australia 5942
Tel.: +61-8-8461-4611
Fax: +61-8-8340-0155

Austria
GRUNDFOS Pumpen Vertrieb Ges.m.b.H.
Grundfosstraße 2
A-5082 Grödig/Salzburg
Tel.: +43-6246-883-0
Fax: +43-6246-883-30

Belgium
N.V. GRUNDFOS Bellux S.A.
Boomsesteenweg 81-83
B-2630 Aartselaar
Tel.: +32-3-870 7300
Fax: +32-3-870 7301

Bosnia and Herzegovina
GRUNDFOS Sarajevo
Zmaja od Bosne 7-7A
BiH-71000 Sarajevo
Tel.: +387 33 592 480
Fax: +387 33 590 465
www.ba.grundfos.com
E-mail: grundfos@bih.net.ba

Brazil
BOMBAS GRUNDFOS DO BRASIL
Av. Humberto de Alencar Castelo Branco, 630
CEP 09850 - 300
São Bernardo do Campo - SP
Tel.: +55-11 4393 5533
Fax: +55-11 4343 5015

Bulgaria
Grundfos Bulgaria EOOD
Slatina District
Iztochna Tangenta street no. 100
BG - 1592 Sofia
Tel.: +359 2 49 22 200
Fax: +359 2 49 22 201
E-mail: bulgaria@grundfos.bg

Canada
GRUNDFOS Canada inc.
2941 Brighton Road
Oakville, Ontario
L6H 6C9
Tel.: +1-905 829 9533
Fax: +1-905 829 9512

China
GRUNDFOS Pumps (Shanghai) Co. Ltd.
10F The Hub, No. 33 Suhong Road
Minhang District
Shanghai 201106 PRC
Tel.: +86 21 612 252 22
Fax: +86 21 612 253 33

Colombia
GRUNDFOS Colombia S.A.S.
Km 1.5 vía Siberia-Cota Conj. Potrero Chico,
Parque Empresarial Arcos de Cota Bod. 1A.
Cota, Cundinamarca
Tel.: +57(1)-2913444
Fax: +57(1)-8764586

Croatia
GRUNDFOS CROATIA d.o.o.
Buzinski prilaz 38, Buzin
HR-10010 Zagreb
Tel.: +385 1 6595 400
Fax: +385 1 6595 499
www.hr.grundfos.com

Czech Republic
GRUNDFOS Sales Czechia and Slovakia s.r.o.
Čajkovského 21
779 00 Olomouc
Tel.: +420-585-716 111

Denmark
GRUNDFOS DK A/S
Martin Bachs Vej 3
DK-8850 Bjerringbro
Tel.: +45-87 50 50 50
Fax: +45-87 50 51 51
E-mail: info_GDK@grundfos.com
www.grundfos.com/DK

Estonia
GRUNDFOS Pumps Eesti OÜ
Peterburi tee 92G
11415 Tallinn
Tel.: + 372 606 1690
Fax: + 372 606 1691

Finland
OY GRUNDFOS Pumput AB
Trukkikuja 1
FI-01360 Vantaa
Tel.: +358-(0) 207 889 500

France
Pompes GRUNDFOS Distribution S.A.
Parc d'Activités de Chesnes
57, rue de Malacombe
F-38290 St. Quentin Fallavier (Lyon)
Tel.: +33-4 74 82 15 15
Fax: +33-4 74 94 10 51

Germany
GRUNDFOS GMBH
Schlüterstr. 33
40699 Erkrath
Tel.: +49-(0) 211 929 69-0
Fax: +49-(0) 211 929 69-3799
E-mail: infoservice@grundfos.de
Service in Deutschland:
kundendienst@grundfos.de

Greece
GRUNDFOS Hellas A.E.B.E.
20th km. Athinon-Markopoulou Av.
P.O. Box 71
GR-19002 Peania
Tel.: +0030-210-66 83 400
Fax: +0030-210-66 46 273

Hong Kong
GRUNDFOS Pumps (Hong Kong) Ltd.
Unit 1, Ground floor, Siu Wai industrial Centre
29-33 Wing Hong Street & 68 King Lam Street, Cheung Sha Wan
Kowloon
Tel.: +852-27861706 / 27861741
Fax: +852-27858664

Hungary
GRUNDFOS South East Europe Kft.
Tópark u. 8
H-2045 Törökbálint
Tel.: +36-23 511 110
Fax: +36-23 511 111

India
GRUNDFOS Pumps India Private Limited
118 Old Mahabalipuram Road
Thoraipakkam
Chennai 600 097
Tel.: +91-44 2496 6800

Indonesia
PT GRUNDFOS Pompa
Graha intirub Lt. 2 & 3
Jln. Cililitan Besar No.454. Makasar, Jakarta Timur
ID-Jakarta 13650
Tel.: +62 21-469-51900
Fax: +62 21-460 6910 / 460 6901

Ireland
GRUNDFOS (Ireland) Ltd.
Unit A, Merrywell Business Park
Ballymount Road Lower
Dublin 12
Tel.: +353-1-4089 800
Fax: +353-1-4089 830

Italy
GRUNDFOS Pompe Italia S.r.l.
Via Gran Sasso 4
I-20060 Truccazzano (Milano)
Tel.: +39-02-95838112
Fax: +39-02-95309290 / 95838461

Japan
GRUNDFOS Pumps K.K.
1-2-3, Shin-Miyakoda, Kita-ku
Hamamatsu
431-2103 Japan
Tel.: +81 53 428 4760
Fax: +81 53 428 5005

Kazakhstan
Grundfos Kazakhstan LLP
7' Kyz-Zhibek Str., Kok-Tobe micr.
KZ-050020 Almaty Kazakhstan
Tel.: +7 (727) 227-98-55/56

Korea
GRUNDFOS Pumps Korea Ltd.
6th Floor, Aju Building 679-5
Yeoksam-dong, Kangnam-ku, 135-916
Seoul, Korea
Tel.: +82-2-5317 600
Fax: +82-2-5633 725

Latvia
SIA GRUNDFOS Pumps Latvia
Deglava biznesa centrs
Augusta Deglava ielā 60
LV-1035, Rīga,
Tel.: + 371 714 9640, 7 149 641
Fax: + 371 914 9646

Lithuania
GRUNDFOS Pumps UAB
Smolensko g. 6
LT-03201 Vilnius
Tel.: + 370 52 395 430
Fax: + 370 52 395 431

Malaysia
GRUNDFOS Pumps Sdn. Bhd.
7 Jalan Peguam U1/25
Glenmarie industrial Park
40150 Shah Alam, Selangor
Tel.: +60-3-5569 2922
Fax: +60-3-5569 2866

Mexico
Bombas GRUNDFOS de México S.A. de C.V.
Boulevard TLC No. 15
Parque industrial Stiva Aeropuerto
Apodaca, N.L. 66600
Tel.: +52-81-8144 4000
Fax: +52-81-8144 4010

Netherlands
GRUNDFOS Netherlands
Veluwezoom 35
1326 AE Almere
Postbus 22015
1302 CA ALMERE
Tel.: +31-88-478 6336
Fax: +31-88-478 6332
E-mail: info_gnl@grundfos.com

New Zealand
GRUNDFOS Pumps NZ Ltd.
17 Beatrice Tinsley Crescent
North Harbour Industrial Estate
Albany, Auckland
Tel.: +64-9-415 3240
Fax: +64-9-415 3250

Norway
GRUNDFOS Pumper A/S
Strømsveien 344
Postboks 235, Leirdal
N-1011 Oslo
Tel.: +47-22 90 47 00
Fax: +47-22 32 21 50

Poland
GRUNDFOS Pompy Sp. z o.o.
ul. Klonowa 23
Baranowo k. Poznania
PL-62-081 Przeźmierowo
Tel.: (+48-61) 650 13 00
Fax: (+48-61) 650 13 50

Portugal
Bombas GRUNDFOS Portugal, S.A.
Rua Calvet de Magalhães, 241
Apartado 1079
P-2770-153 Paço de Arcos
Tel.: +351-21-440 76 00
Fax: +351-21-440 76 90

Romania
GRUNDFOS Pompe România SRL
S-PARK BUSINESS CENTER, Clădirea A2, etaj 2
Str. Tipografilor, Nr. 11-15, Sector 1, Cod 013714
Bucuresti, Romania
Tel.: 004 021 2004 100
E-mail: romania@grundfos.ro

Serbia
Grundfos Srbija d.o.o.
Omladinskih brigada 90b
11070 Novi Beograd
Tel.: +381 11 2258 740
Fax: +381 11 2281 769
www.rs.grundfos.com

Singapore
GRUNDFOS (Singapore) Pte. Ltd.
25 Jalan Tukang
Singapore 619264
Tel.: +65-6681 9688
Faxax: +65-6681 9689

Slovakia
GRUNDFOS s.r.o.
Prievozská 4D 821 09 BRATISLAVA
Tel.: +421 2 5020 1426
sk.grundfos.com

Slovenia
GRUNDFOS LJUBLJANA, d.o.o.
Leskoškova 9e, 1122 Ljubljana
Tel.: +386 (0) 1 568 06 10
Fax: +386 (0)1 568 06 19
E-mail: tehnika-si@grundfos.com

South Africa
GRUNDFOS (PTY) LTD
16 Lascelles Drive, Meadowbrook Estate
1609 Germiston, Johannesburg
Tel.: (+27) 10 248 6000
Fax: (+27) 10 248 6002
E-mail: lgradidge@grundfos.com

Spain
Bombas GRUNDFOS España S.A.
Camino de la Fuentecilla, s/n
E-28110 Algete (Madrid)
Tel.: +34-91-848 8800
Fax: +34-91-628 0465

Sweden
GRUNDFOS AB
Box 333 (Lunnagårdsgatan 6)
431 24 Mölndal
Tel.: +46 31 332 23 000
Fax: +46 31 331 94 60

Switzerland
GRUNDFOS Pumpen AG
Bruggacherstrasse 10
CH-8117 Fällanden/ZH
Tel.: +41-44-806 8111
Fax: +41-44-806 8115

Taiwan
GRUNDFOS Pumps (Taiwan) Ltd.
7 Floor, 219 Min-Chuan Road
Taichung, Taiwan, R.O.C.
Tel.: +886-4-2305 0868
Fax: +886-4-2305 0878

Thailand
GRUNDFOS (Thailand) Ltd.
92 Chaloem Phrakiat Rama 9 Road
Dokmai, Pravej, Bangkok 10250
Tel.: +66-2-725 8999
Fax: +66-2-725 8998

Turkey
GRUNDFOS POMPA San. ve Tic. Ltd. Sti.
Gebze Organize Sanayi Bölgesi
Ihsan dede Caddesi
2. yol 200. Sokak No. 204
41490 Gebze/ Kocaeli
Tel.: +90 - 262-679 7979
Fax: +90 - 262-679 7905
E-mail: satis@grundfos.com

Ukraine
ТОВ "ГРУНДФОС УКРАЇНА"
Бізнес Центр Європа
Столичне шосе, 103
м. Київ, 03131, Україна
Tel.: (+38 044) 237 04 00
Fax: (+38 044) 237 04 01
E-mail: ukraine@grundfos.com

United Arab Emirates
GRUNDFOS Gulf Distribution
P.O. Box 16768
Jebel Ali Free Zone, Dubai
Tel.: +971 4 8815 166
Fax: +971 4 8815 136

United Kingdom
GRUNDFOS Pumps Ltd.
Grovebury Road
Leighton Buzzard/Beds. LU7 4TL
Tel.: +44-1525-850000
Fax: +44-1525-850011

U.S.A.
Global Headquarters for WU
856 Koomey Road
Brookshire, Texas 77423 USA
Phone: +1-630-236-5500

Uzbekistan
Grundfos Tashkent, Uzbekistan
The Representative Office of Grundfos Kazakhstan in Uzbekistan
38a, Oybek street, Tashkent
Tel.: (+998) 71 150 3290 / 71 150 3291
Fax: (+998) 71 150 3292

© 2025 Grundfos Holding A/S, all rights reserved.

Trademarks displayed in this material, including but not limited to Grundfos and the Grundfos logo, are registered trademarks owned by The Grundfos Group.

99743071 **09.2025**

ECM: 1426791