SE cable Ex

Installation and operating instructions

SE cable Ex
Installation and operating instructions
Other languages
http://net.grundfos.com/qr/i/99897875

GRUNDFOS

SE cable Ex

English (GB)

Installation and operating instructions 4

Original installation and operating instructions

Table of contents

1. General information 4
1.1 Hazard statements 4
1.2 Notes 4

2. Product introduction 5
2.1 Product description 5
2.2 Intended use 5
2.3 Identification. 6
2.4 Approvals 7

3. Installation requirements 8

4. Mechanical connection 8
4.1 Cable connection 8

5. Cable plugs. 10

6. Electrical connection 13

7. Service 14
7.1 Maintanance and repair. 14
7.2 Spare parts 14

8. Technical data 14
8.1 Schedule of limitations 14

9. Disposal 14

1. General information

Read this document before you install the product. Installation and operation must comply with local regulations and accepted codes of good practice.

1.1 Hazard statements

The symbols and hazard statements below may appear in Grundfos installation and operating instructions, safety instructions and service instructions.

DANGER
Indicates a hazardous situation which, if not avoided, will result in death or serious personal injury.

WARNING
Indicates a hazardous situation which, if not avoided, could result in death or serious personal injury.

CAUTION
Indicates a hazardous situation which, if not avoided, could result in minor or moderate personal injury.

The hazard statements are structured in the following way:

SIGNAL WORD
Description of the hazard
Consequence of ignoring the warning
- Action to avoid the hazard.

1.2 Notes

The symbols and notes below may appear in Grundfos installation and operating instructions, safety instructions and service instructions.

Observe these instructions for explosion-proof products.

A blue or grey circle with a white graphical symbol indicates that an action must be taken.

A red or grey circle with a diagonal bar, possibly with a black graphical symbol, indicates that an action must not be taken or must be stopped.

If these instructions are not observed, it may result in malfunction or damage to the equipment.

Tips and advice that make the work easier.

2. Product introduction

Note: Product images are for illustrative purposes only.

2.1 Product description

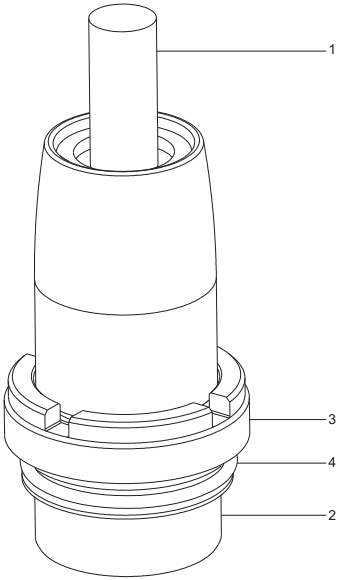

TM076573

SE cable Ex

Pos.	Designation
1	Cable
2	Plug
3	Union nut
4	O-ring

2.2 Intended use

The SE cable Ex is intended for use with the following Grundfos products:

- small (standard and AutoAdapt verisons of SL, DP, EF and SEG) and
- medium-sized (SE, SL) explosion-proof submersible wastewater pumps
- explosion-proof agitators (SMD).

2.3 Identification

2.3.1 Identification print

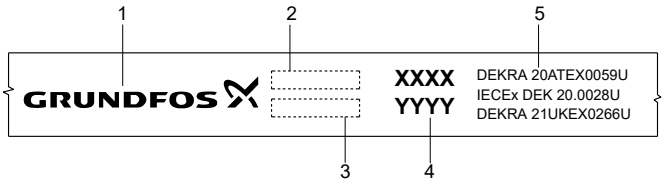

TM079297

Pos.	Description	Pos.	Description
1	Manufacturer	4	Notified and approved body number for Ex manufacturing
2	Product number	5	Approval number
3	Batch code		

2.3.2 Type key

Example: SE cable C/D EX 4G × 2,5 + 3 × 1, Y, 10

Code	Description	Explanation
SE cable	Assembled cable	Cable type
[ ]	Without screening	Cable screening
w.scr [1)]	With screening	
B	Diameter 42 mm	Plug type
C/D	Diameter 44 mm	
Ex	Explosion-proof cable	Cable version
4G × 1.5 + 3 × 1	7-pole cable [mm^2]	Number of poles × size of cores
4G x 2.5 + 3 x 1	7-pole cable [mm^2]	
7G × 2.5 + 3 × 1	10-pole cable [mm^2]	
[ ]		Type of connection
Y	Star connection	
D	Delta connection	

Code	Description	Explanation
10	Length	Cable length [m]
15		
20		
25		
30		
40		
50		

1) The only applied raw screened cable: 3G3GC3G-F 3x1 AiC + 4G2.5 mm2

2.4 Approvals

The SE cable Ex is tested by DEKRA.

The ATEX certificate of the cable is DEKRA 20ATEX0059U and the UKEX certificate of the cable is DEKRA 21UKEX0266U for Ex II2G Ex db IIB Gb, Ex II2D Ex tb IIIC Db.

The IECEx certificate of the cable is IECEx DEK 20.0028U for Ex db IIB Gb, Ex tb IIIC Db.

Directive/standard	Code	Description
ATEX and UKEX Harmonised European standard: EN IEC 60079-0:2018, EN 60079-1:2014, EN 60079-31:2014	XXXX	The number of the notified body which has certified the quality system for ATEX.
	YYYY	The number of the approved body which has certified the quality system for UKEX.
	Ex	The equipment conforms to harmonised European standard.
	II	Equipment group according to the ATEX directive and UKEX regulation, defining the requirements applicable to the equipment in this group.
	2	Equipment category according to the ATEX directive and UKEX regulation, defining the requirements applicable to the equipment in this category.
	G	Explosive atmospheres caused by gases, vapours or mists.
	D	Explosive atmospheres caused by dust.
IECEx standard IEC 60079 0:2017, IEC 60079-1:2014, IEC 60079 31:2013	Ex	Explosion protection marking.
	db	Flameproof enclosure according to EN IEC 60079-1.
	tb*	Protection by enclosure according to EN IEC 60079-31.
	IIB	Classification of gases, see EN IEC 60079-0. Gas group B includes gas group A.
	IIIC	Classification of dusts, see EN IEC 60079-0. Dust group C includes dust groups A and B.
	Gb	Equipment for explosive gas with "high" level of protection.
	Db	Equipment for explosive dust atmospheres.

* The "tb" protection mode only applies to SE1, SEV 1.1-11kW pumps.

3. Installation requirements

Before installation, make sure that the environment is not potentially explosive.

Compliance with the standards ENIEC 60079-17 and EN IEC 60079-19 is a customer responsibility.

Ex assembled cable installation must be carried out by Grundfos or an authorised service workshop.

Before installation, check the assembled cable for damages. Only undamaged cable can be installed.

After removing the protective cap, inspect the external insulation of the rubber cable and the cable plug part.

Check the O-ring and the connection surface (see fig. *SE cable Ex* pos. 2 and 4). If visible damage is detected, replace the cable.

The cable plug must be fixed with the lock nut from the service kit.

Related information

2.1 Product description

4. Mechanical connection

4.1 Cable connection

Proceed as follows:

Use Rocol 22 (Sapphire Agua Sil) lubricant or equivalent.

1. Clean the cable plug, the locking ring, the rubber cable and the cable entry hole in the product housing.
2. Lubricate the groove on the cable plug for the O-ring.
3. Fit the O-ring on the plug into the groove and lubricate it.
4. Connect the cable plug to the cable entry hole of the product housing. Make sure the guide pin on the cable plug fits into the socket. See fig. *Plug with the pin*.
5. Screw the union nut into the product and tighten it with the spanner (PN 95043464). Torques to apply:
   - 50+/-5 Nm - type B
   - 75+/-5 Nm - types C/D

   To avoid damage to the wires in the pin housing, make sure the cable plug cannot rotate when tightening the union nut.

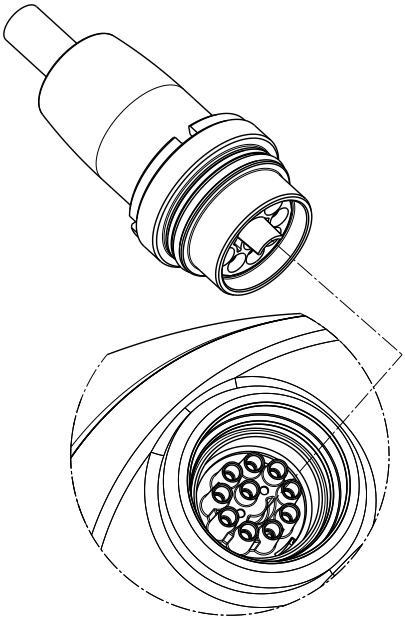

TM076487

Plug with the pin

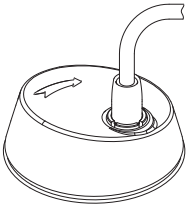

TM076425

Connected cable

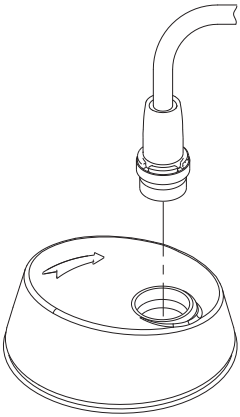

TM076424

Pump with cable plug

5. Cable plugs

Product type	Product frame size	Cable plug type
SE1, SEV 1.1-11kW	B	B
	C/D	C/D
SL1, SLV 1.1-11kW	B-135 Ex-DOL	B
	B-155 Ex-DOL	
	C-155 Ex-DOL	
	B-135 Ex	C/D
	B-155 Ex	
	C-155 Ex	
	C-170 Ex	
	C-210 Ex	
	D-210 Ex	
	D-245 Ex	
SEG,DP,EF,SL1,SLV Autoadapt	A	B
	B	
	C	
SEG,DP,EF,SL1,SLV	A	B
	B/C	
SMD	135	B
	180	

Only the following cable variants are available:

- SE cable B Ex 4G 1.5+3x1
- SE cable w scr. B Ex*
- SE cable C/D Ex 4G 2.5+3x1, Y
- SE cable C/D Ex 4G 2.5+3x1, D
- SE cable w.scr. C/D Ex, Y*
- SE cable w.scr. C/D Ex, D*
- SE cable C/D Ex 7G 2.5+3x1

* The only applied raw screened cable: 3G3GC3G-F 3x1 AiC + 4G2.5 mm2

Plug type	Pole	Screen	Con-nection	Steel grade	Cable length [m]							Steel grade		
					10	15	20	25	30	40	50	Plug housing	Union nut	Top nut
B	7	-	-	Normal	√	√	√	√	√	√	√	EN 1.4408/ EN 1.4404	EN 1.4408	-
			-	Duplex	√	√	√	√	√	√	√	EN 1.4517/ EN 1.4462	EN 1.4517	-
		√	-	Normal	√	√	√	√	√	√	√	EN 1.4404/ EN 1.4408	EN 1.4408	EN 1.4404/ EN 1.4408
			-	Duplex	√	√	√	√	√	√	√	EN 1.4517/ EN 1.4462	EN 1.4517	EN 1.4462/ EN 1.4517
C/D	7	-	Y	Normal	√	√	√	√	√	√	√	EN 1.4408/ EN 1.4404	EN 1.4408	-
				Duplex	√	√	√	√	√	√	√	EN 1.4517/ EN 1.4462	EN 1.4517	-
			D	Normal	√	√	√	√	√	√	√	EN 1.4408/ EN 1.4404	EN 1.4408	-
				Duplex	√	√	√	√	√	√	√	EN 1.4517/ EN 1.4462	EN 1.4517	-
		√	Y	Normal	√	√	√	√	√	√	√	EN 1.4404/ EN 1.4408	EN 1.4408	EN 1.4404/ EN 1.4408
				Duplex	√	√	√	√	√	√	√	EN 1.4462/ EN 1.4517	EN 1.4517	EN 1.4462/ EN 1.4517
			D	Normal	√	√	√	√	√	√	√	EN 1.4404/ EN 1.4408	EN 1.4408	EN 1.4404/ EN 1.4408
				Duplex	√	√	√	√	√	√	√	EN 1.4462/ EN 1.4517	EN 1.4517	EN 1.4462/ EN 1.4517
	10	-	-	Normal	√	√	√	√	√	√	√	EN 1.4408/ EN 1.4404	EN 1.4408	-
				Duplex	√	√	√	√	√	√	√	EN 1.4517/ EN 1.4462	EN 1.4517	-

Plug type B

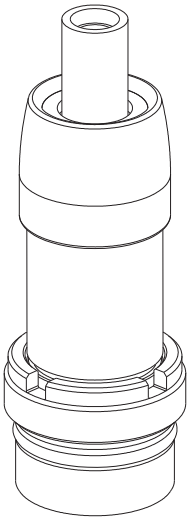

TM076566

Plug type B with 7-pole screened cable

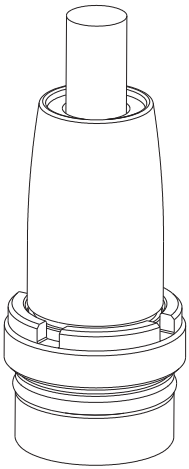

TM076567

Plug type B with 7-pole unscreened cable

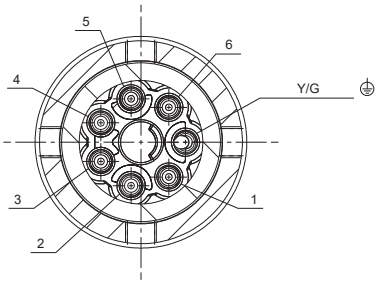

TM076570

7-pole cable end for plug type B

Pos.	Description
Y/G	Yellow/Green

Plug type C/D

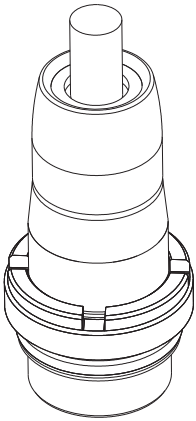

TM077242

Plug type C/D with 7-pole screened cable

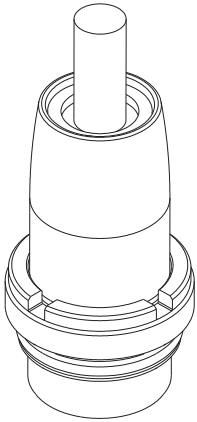

TM076591

Plug type C/D with unscreened cable

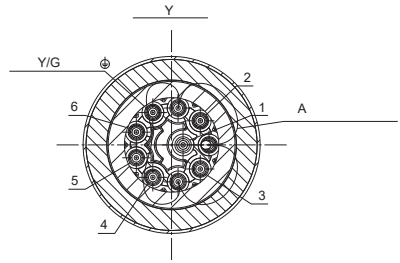

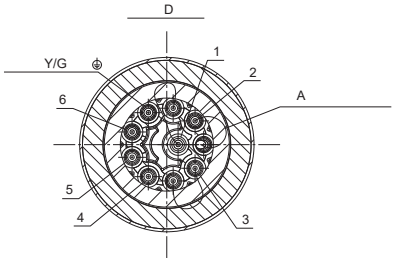

TM076592

7-pole cable end for plug type C/D

Pos.	Description
Y/G	Yellow/Green
Y	Y connection
D	D connection
A	Short circuit wires

Plug type C/D

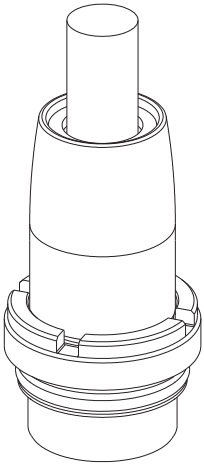

TM076568

Plug type C/D with 10-pole unscreened cable

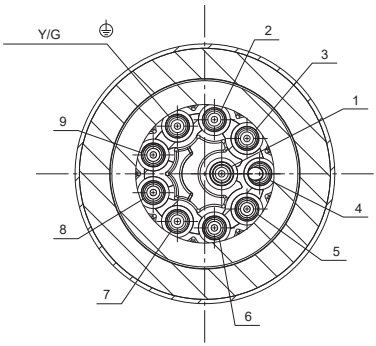

TM076571

10-pole unscreened cable end for plug type C/D

Pos.	Description
Y/G	Yellow/Green

6. Electrical connection

After cable installation, check the earthing continuity.

Connect the free end of the cable to the main power supply or to the control panel according to the installation and operating instructions of the selected product.

All the installation and operating instructions of Grundfos products are available on www.product-selection.grundfos.com

Ensure proper earthing connection between the screen of the cable and the control cabinet.

7. Service

7.1 Maintanance and repair

The assembled cable does not require maintenance and must not be repaired. Cable condition must be checked regularly. Damaged cable must be replaced.

If the cable is disconnected, the re-connection of the cable must follow the instructions in section *Cable connection*.

Compliance with the standards EN IEC 60079-17 and EN IEC 60079-19 is a customer responsibility.

Ex assembled cable installation must be carried out by Grundfos or an authorised service workshop.

Related information

4.1 Cable connection

7.2 Spare parts

The O-ring and the union nut are the only parts that can be replaced.

Ex assembled cable installation must be carried out by Grundfos or an authorised service workshop.

8. Technical data

Operating temperature range: -20 to +80 °C

Enclosure class: IP68

Maximum installation depth: 20m

Voltage range: 220-480 VAC

Power range: 1.2 - 12.7 kW

8.1 Schedule of limitations

The plug has a cylindrical shape and connects to the pump motor enclosure.

The O-ring of the plug is compressed through the hole in the motor enclosure.

The lock nut must fit in the threaded hole of the motor enclosure.

For more information, see the *SE cable Ex ATEX Schedule Drawing* (document 10000282561 of material 99897875 in SAP).

9. Disposal

This product or parts of it must be disposed of in an environmentally sound way:

1. Use the public or private waste collection service.
2. If this is not possible, contact the nearest Grundfos company or service workshop.

The crossed-out wheelie bin symbol on a product means that it must be disposed of separately from household waste. When a product marked with this symbol reaches its end of life, take it to a collection point designated by the local waste disposal authorities. The separate collection and recycling of such products will help protect the environment and human health.

See also end-of-life information at www.grundfos.com/product-recycling.

Argentina
Bombas GRUNDFOS de Argentina S.A.
Ruta Panamericana km. 37.500industin
1619 - Garín Pcia. de B.A.
Tel.: +54-3327 414 444
Fax: +54-3327 45 3190

Australia
GRUNDFOS Pumps Pty. Ltd.
P.O. Box 2040
Regency Park
South Australia 5942
Tel.: +61-8-8461-4611
Fax: +61-8-8340-0155

Austria
GRUNDFOS Pumpen Vertrieb
Ges.m.b.H.
Grundfosstraße 2
A-5082 Grödig/Salzburg
Tel.: +43-6246-883-0
Fax: +43-6246-883-30

Belgium
N.V. GRUNDFOS Bellux S.A.
Boomsesteenweg 81-83
B-2630 Aartselaar
Tel.: +32-3-870 7300
Fax: +32-3-870 7301

Bosnia and Herzegovina
GRUNDFOS Sarajevo
Zmaja od Bosne 7-7A
BiH-71000 Sarajevo
Tel.: +387 33 592 480
Fax: +387 33 590 465
www.ba.grundfos.com
E-mail: grundfos@bih.net.ba

Brazil
BOMBAS GRUNDFOS DO BRASIL
Av. Humberto de Alencar Castelo
Branco, 630
CEP 09850 - 300
São Bernardo do Campo - SP
Tel.: +55-11 4393 5533
Fax: +55-11 4343 5015

Bulgaria
Grundfos Bulgaria EOOD
Slatina District
Iztochna Tangenta street no. 100
BG - 1592 Sofia
Tel.: +359 2 49 22 200
Fax: +359 2 49 22 201
E-mail: bulgaria@grundfos.bg

Canada
GRUNDFOS Canada inc.
2941 Brighton Road
Oakville, Ontario
L6H 6C9
Tel.: +1-905 829 9533
Fax: +1-905 829 9512

China
GRUNDFOS Pumps (Shanghai) Co. Ltd.
10F The Hub, No. 33 Suhong Road
Minhang District
Shanghai 201106 PRC
Tel.: +86 21 612 252 22
Fax: +86 21 612 253 33

Colombia
GRUNDFOS Colombia S.A.S.
Km 1.5 vía Siberia-Cota Conj. Potrero
Chico,
Parque Empresarial Arcos de Cota Bod.
1A.
Cota, Cundinamarca
Tel.: +57(1)-2913444
Fax: +57(1)-8764586

Croatia
GRUNDFOS CROATIA d.o.o.
Buzinski prilaz 38, Buzin
HR-10010 Zagreb
Tel.: +385 1 6595 400
Fax: +385 1 6595 499
www.hr.grundfos.com

Czech Republic
GRUNDFOS Sales Czechia and Slovakia
s.r.o.
Čajkovského 21
779 00 Olomouc
Tel.: +420-585-716 111

Denmark
GRUNDFOS DK A/S
Martin Bachs Vej 3
DK-8850 Bjerringbro
Tel.: +45-87 50 50 50
Fax: +45-87 50 51 51
E-mail: info_GDK@grundfos.com
www.grundfos.com/DK

Estonia
GRUNDFOS Pumps Eesti OÜ
Peterburi tee 92G
11415 Tallinn
Tel.: + 372 606 1690
Fax: + 372 606 1691

Finland
OY GRUNDFOS Pumput AB
Trukkikuja 1
FI-01360 Vantaa
Tel.: +358-(0) 207 889 500

France
Pompes GRUNDFOS Distribution S.A.
Parc d'Activités de Chesnes
57, rue de Malacombe
F-38290 St. Quentin Fallavier (Lyon)
Tel.: +33-4 74 82 15 15
Fax: +33-4 74 94 10 51

Germany
GRUNDFOS GMBH
Schlüterstr. 33
40699 Erkrath
Tel.: +49-(0) 211 929 69-0
Fax: +49-(0) 211 929 69-3799
E-mail: infoservice@grundfos.de
Service in Deutschland:
kundendienst@grundfos.de

Greece
GRUNDFOS Hellas A.E.B.E.
20th km. Athinon-Markopoulou Av.
P.O. Box 71
GR-19002 Peania
Tel.: +0030-210-66 83 400
Fax: +0030-210-66 46 273

Hong Kong
GRUNDFOS Pumps (Hong Kong) Ltd.
Unit 1, Ground floor, Siu Wai industrial
Centre
29-33 Wing Hong Street & 68 King Lam
Street, Cheung Sha Wan
Kowloon
Tel.: +852-27861706 / 27861741
Fax: +852-27858664

Hungary
GRUNDFOS South East Europe Kft.
Tópark u. 8
H-2045 Törökbálint
Tel.: +36-23 511 110
Fax: +36-23 511 111

India
GRUNDFOS Pumps India Private
Limited
118 Old Mahabalipuram Road
Thoraipakkam
Chennai 600 097
Tel.: +91-44 2496 6800

Indonesia
PT GRUNDFOS Pompa
Graha intirub Lt. 2 & 3
Jln. Cililitan Besar No.454. Makasar,
Jakarta Timur
ID-Jakarta 13650
Tel.: +62 21-469-51900
Fax: +62 21-460 6910 / 460 6901

Ireland
GRUNDFOS (Ireland) Ltd.
Unit A, Merrywell Business Park
Ballymount Road Lower
Dublin 12
Tel.: +353-1-4089 800
Fax: +353-1-4089 830

Italy
GRUNDFOS Pompe Italia S.r.l.
Via Gran Sasso 4
I-20060 Truccazzano (Milano)
Tel.: +39-02-95838112
Fax: +39-02-95309290 / 95838461

Japan
GRUNDFOS Pumps K.K.
1-2-3, Shin-Miyakoda, Kita-ku
Hamamatsu
431-2103 Japan
Tel.: +81 53 428 4760
Fax: +81 53 428 5005

Kazakhstan
Grundfos Kazakhstan LLP
7' Kyz-Zhibek Str., Kok-Tobe micr.
KZ-050020 Almaty Kazakhstan
Tel.: +7 (727) 227-98-55/56

Korea
GRUNDFOS Pumps Korea Ltd.
6th Floor, Aju Building 679-5
Yeoksam-dong, Kangnam-ku, 135-916
Seoul, Korea
Tel.: +82-2-5317 600
Fax: +82-2-5633 725

Latvia
SIA GRUNDFOS Pumps Latvia
Deglava biznesa centrs
Augusta Deglava ielā 60
LV-1035, Rīga,
Tel.: + 371 714 9640, 7 149 641
Fax: + 371 914 9646

Lithuania
GRUNDFOS Pumps UAB
Smolensko g. 6
LT-03201 Vilnius
Tel.: + 370 52 395 430
Fax: + 370 52 395 431

Malaysia
GRUNDFOS Pumps Sdn. Bhd.
7 Jalan Peguam U1/25
Glenmarie industrial Park
40150 Shah Alam, Selangor
Tel.: +60-3-5569 2922
Fax: +60-3-5569 2866

Mexico
Bombas GRUNDFOS de México
S.A. de C.V.
Boulevard TLC No. 15
Parque industrial Stiva Aeropuerto
Apodaca, N.L. 66600
Tel.: +52-81-8144 4000
Fax: +52-81-8144 4010

Netherlands
GRUNDFOS Netherlands
Veluwezoom 35
1326 AE Almere
Postbus 22015
1302 CA ALMERE
Tel.: +31-88-478 6336
Fax: +31-88-478 6332
E-mail: info_gnl@grundfos.com

New Zealand
GRUNDFOS Pumps NZ Ltd.
17 Beatrice Tinsley Crescent
North Harbour Industrial Estate
Albany, Auckland
Tel.: +64-9-415 3240
Fax: +64-9-415 3250

Norway
GRUNDFOS Pumper A/S
Strømsveien 344
Postboks 235, Leirdal
N-1011 Oslo
Tel.: +47-22 90 47 00
Fax: +47-22 32 21 50

Poland
GRUNDFOS Pompy Sp. z o.o.
ul. Klonowa 23
Baranowo k. Poznania
PL-62-081 Przeźmierowo
Tel.: (+48-61) 650 13 00
Fax: (+48-61) 650 13 50

Portugal
Bombas GRUNDFOS Portugal, S.A.
Rua Calvet de Magalhães, 241
Apartado 1079
P-2770-153 Paço de Arcos
Tel.: +351-21-440 76 00
Fax: +351-21-440 76 90

Romania
GRUNDFOS Pompe România SRL
S-PARK BUSINESS CENTER, Clădirea A2, etaj 2
Str. Tipografilor, Nr. 11-15, Sector 1, Cod 013714
Bucuresti, Romania
Tel.: 004 021 2004 100
E-mail: romania@grundfos.ro

Serbia
Grundfos Srbija d.o.o.
Omladinskih brigada 90b
11070 Novi Beograd
Tel.: +381 11 2258 740
Fax: +381 11 2281 769
www.rs.grundfos.com

Singapore
GRUNDFOS (Singapore) Pte. Ltd.
25 Jalan Tukang
Singapore 619264
Tel.: +65-6681 9688
Faxax: +65-6681 9689

Slovakia
GRUNDFOS s.r.o.
Prievozská 4D 821 09 BRATISLAVA
Tel.: +421 2 5020 1426
sk.grundfos.com

Slovenia
GRUNDFOS LJUBLJANA, d.o.o.
Leskoškova 9e, 1122 Ljubljana
Tel.: +386 (0) 1 568 06 10
Fax: +386 (0)1 568 06 19
E-mail: tehnika-si@grundfos.com

South Africa
GRUNDFOS (PTY) LTD
16 Lascelles Drive, Meadowbrook Estate
1609 Germiston, Johannesburg
Tel.: (+27) 10 248 6000
Fax: (+27) 10 248 6002
E-mail: lgradidge@grundfos.com

Spain
Bombas GRUNDFOS España S.A.
Camino de la Fuentecilla, s/n
E-28110 Algete (Madrid)
Tel.: +34-91-848 8800
Fax: +34-91-628 0465

Sweden
GRUNDFOS AB
Box 333 (Lunnagårdsgatan 6)
431 24 Mölndal
Tel.: +46 31 332 23 000
Fax: +46 31 331 94 60

Switzerland
GRUNDFOS Pumpen AG
Bruggacherstrasse 10
CH-8117 Fällanden/ZH
Tel.: +41-44-806 8111
Fax: +41-44-806 8115

Taiwan
GRUNDFOS Pumps (Taiwan) Ltd.
7 Floor, 219 Min-Chuan Road
Taichung, Taiwan, R.O.C.
Tel.: +886-4-2305 0868
Fax: +886-4-2305 0878

Thailand
GRUNDFOS (Thailand) Ltd.
92 Chaloem Phrakiat Rama 9 Road
Dokmai, Pravej, Bangkok 10250
Tel.: +66-2-725 8999
Fax: +66-2-725 8998

Turkey
GRUNDFOS POMPA San. ve Tic. Ltd. Sti.
Gebze Organize Sanayi Bölgesi
Ihsan dede Caddesi
2. yol 200. Sokak No. 204
41490 Gebze/ Kocaeli
Tel.: +90 - 262-679 7979
Fax: +90 - 262-679 7905
E-mail: satis@grundfos.com

Ukraine
ТОВ "ГРУНДФОС УКРАЇНА"
Бізнес Центр Європа
Столичне шосе, 103
м. Київ, 03131, Україна
Tel.: (+38 044) 237 04 00
Fax: (+38 044) 237 04 01
E-mail: ukraine@grundfos.com

United Arab Emirates
GRUNDFOS Gulf Distribution
P.O. Box 16768
Jebel Ali Free Zone, Dubai
Tel.: +971 4 8815 166
Fax: +971 4 8815 136

United Kingdom
GRUNDFOS Pumps Ltd.
Grovebury Road
Leighton Buzzard/Beds. LU7 4TL
Tel.: +44-1525-850000
Fax: +44-1525-850011

U.S.A.
Global Headquarters for WU
856 Koomey Road
Brookshire, Texas 77423 USA
Phone: +1-630-236-5500

Uzbekistan
Grundfos Tashkent, Uzbekistan
The Representative Office of Grundfos Kazakhstan in Uzbekistan
38a, Oybek street, Tashkent
Tel.: (+998) 71 150 3290 / 71 150 3291
Fax: (+998) 71 150 3292

Trademarks displayed in this material, including but not limited to Grundfos and the Grundfos logo, are registered trademarks owned by The Grundfos Group. © 2025 Grundfos Holding A/S, all rights reserved.

99897875 **02.2025**

ECM: 1416241