Hydro Multi-E

Installation and operating instructions

GRUNDFOS

Hydro Multi-E

English (GB)
Installation and operating instructions 4
中文 (CN)
安装和使用说明书 31
Appendix A 58

Original installation and operating instructions

Table of contents

1. General information . . . 4
1.1 Hazard statements . . . 4
1.2 Notes . . . 4
1.3 Hygiene . . . 4
1.4 Target group . . . 5

2. System introduction . . . 5
2.1 System description . . . 5
2.2 Intended use . . . 5
2.3 Applications . . . 5
2.4 Identification . . . 6

3. Receiving the system . . . 8
3.1 Transporting the system . . . 8
3.2 Inspecting the system . . . 8
3.3 Scope of delivery . . . 8
3.4 Handling and lifting the system . . . 8

4. Installation requirements . . . 9
4.1 Location . . . 9
4.2 Network interfaces and services . . . 9
4.3 Motor cooling . . . 9

5. Installing the system . . . 10
5.1 Mechanical installation . . . 10
5.2 Electrical connection . . . 10
5.3 Functional modules . . . 12
5.4 Signal relays . . . 16
5.5 Signal cables . . . 17
5.6 Installing a communication interface module . . . 17

6. Starting up the system . . . 18

7. Control functions . . . 19
7.1 Grundfos Eye . . . 19

8. Multi-pump function . . . 21

9. Setting the system . . . 21
9.1 Priority of settings . . . 22

10. Protective functions . . . 23
10.1 Dry-running protection . . . 23

11. Servicing the system . . . 24
11.1 Maintaining the system . . . 24
11.2 Taking the system out of operation . . . 24
11.3 Startup the system after standstill . . . 24

12. Fault finding . . . 25
12.1 The system does not run when started . . . 25
12.2 The system starts but stops immediately afterwards . . . 25
12.3 The system stops and cannot restart . . . 25
12.4 Unstable water supply from the system . . . 25
12.5 Pumps are running but deliver no water . . . 25
12.6 The system cannot reach the setpoint . . . 25
12.7 Leakage from a shaft seal . . . 25
12.8 There is noise when the pumps are operating . . . 25
12.9 Very frequent starts and stops . . . 25

13. Technical data . . . 26
13.1 Operating conditions . . . 26
13.2 Supply voltage . . . 27
13.3 Leakage current . . . 27
13.4 Sound pressure level . . . 28
13.5 Other technical data . . . 28
13.6 Factory settings . . . 29

14. Product manuals . . . 29

15. Disposal . . . 29
15.1 Precautions for disposal . . . 29
15.2 Disposing of the system . . . 29

16. Document quality feedback . . . 30

1. General information

Read this document before you install the system. Installation and operation must comply with local regulations and accepted codes of good practice.

1.1 Hazard statements

The symbols and hazard statements below may appear in Grundfos installation and operating instructions, safety instructions and service instructions.

DANGER
Indicates a hazardous situation which, if not avoided, will result in death or serious personal injury.

WARNING
Indicates a hazardous situation which, if not avoided, could result in death or serious personal injury.

CAUTION
Indicates a hazardous situation which, if not avoided, could result in minor or moderate personal injury.

The hazard statements are structured in the following way:

SIGNAL WORD
Description of the hazard
Consequence of ignoring the warning

- Action to avoid the hazard.

1.2 Notes

The symbols and notes below may appear in Grundfos installation and operating instructions, safety instructions and service instructions.

Observe these instructions for explosion-proof products.

A blue or gray circle with a white graphical symbol indicates that an action must be taken.

A red or gray circle with a diagonal bar, possibly with a black graphical symbol, indicates that an action must not be taken or must be stopped.

If these instructions are not observed, it may result in malfunction or damage to the equipment.

Tips and advice that make the work easier.

1.3 Hygiene

Grundfos systems are functionally tested and may therefore contain small amounts of residual water. Contaminated drinking water can endanger health, so before using the system, it must be rinsed or flushed thoroughly. This also applies if the system is not used for a longer period.

Rinsing and flushing must always be done in accordance with local regulations and practices.

1.4 Target group

These installation and operating instructions are intended for professional installers and for the operators of the system.

We recommend that installation be carried out by skilled persons with technical qualifications required by the specific legislation in force.

2. System introduction

2.1 System description

The system incorporates Grundfos CRE, CRIE, CME-A or CME-I pumps with integrated frequency-controlled single- or three-phase MGE motors and a breaker cabinet.

The system adjusts its performance to the demand by cutting the required number of pumps in or out and through parallel control of the pumps in operation.

2.2 Intended use

The system is a range of factory-assembled systems ready for installation and operation.

The system maintains a constant pressure through continuous variable adjustment of the speed of the connected pumps.

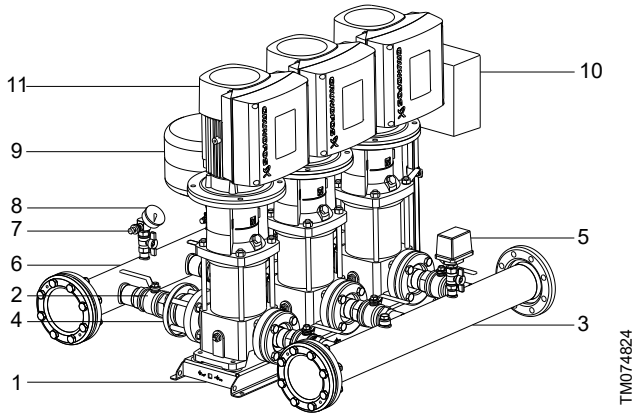

System with CRE, CRIE pumps

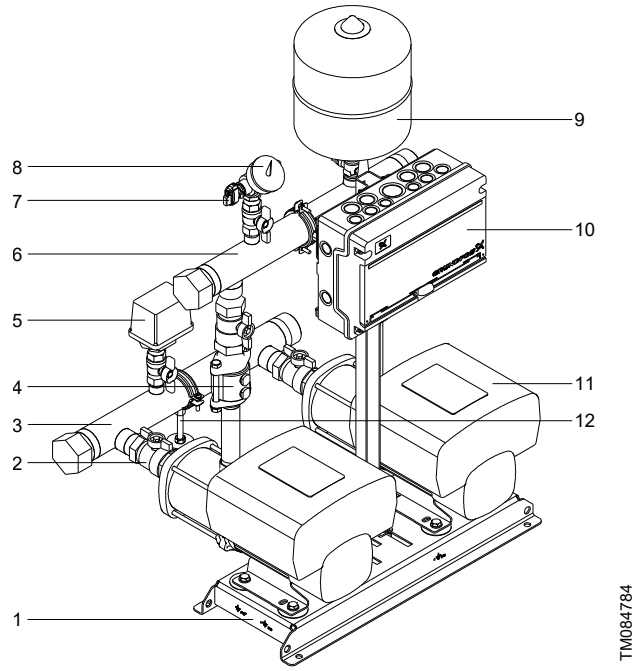

System with CME pumps

Pos.	Description
1	Base frame
2	Isolating valve
3	Inlet manifold
4	Non-return valve
5	Pressure switch
6	Outlet manifold
7	Outlet-pressure sensor
8	Pressure gauge
9	Diaphragm tank
10	Breaker cabinet
11	Pump
12	Support foot

The breaker cabinet incorporates a main switch and circuit breakers.

2.3 Applications

The system is designed for pressure boosting of clean water in places such as:

- hotels
- hospitals
- schools
- office buildings
- industry
- irrigation
- wash and clean
- apartment buildings
- blocks of flats.

2.4 Identification

2.4.1 Nameplate

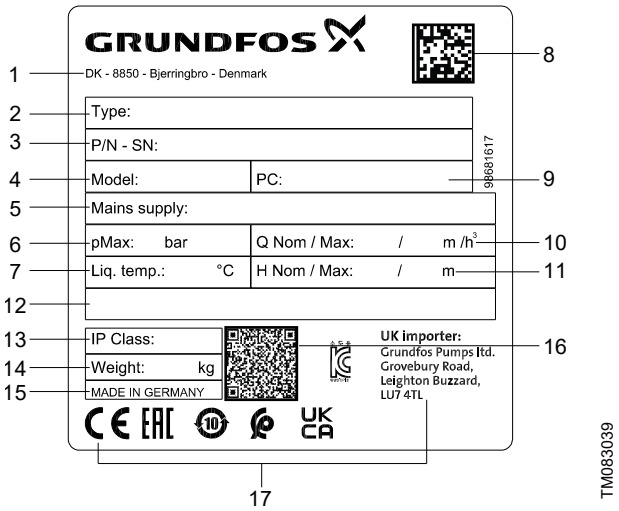

Nameplate example

Pos.	Description
1	Company address
2	System type
3	System number and serial number
4	System model
5	Mains supply
6	Max. operating pressure
7	Liquid temperature
8	Data matrix application identifier
9	Production code
10	Nominal flow rate and max. flow rate
11	Nominal head and max. head
12	Technical documents
13	IP class
14	Weight
15	Country of origin
16	QR code
17	Marks of approval

2.4.2 Type key

Example: Hydro Multi-E 2 CRE 15-3 U7 A-A-A-A-ABC

Code	Explanation		Designation
Hydro Multi			System name
-E	E: All pumps with E-motor		System type
2			Number of main pumps
CRE 15-3			Pump type
U7	U1: 3 × 380-415 V, N, PE, 50/60 Hz U2: 3 × 380-415 V, PE, 50/60 Hz U7: 1 × 200-240 V, PE, 50/60 Hz U8: 1 × 200-240 V, N, PE, 50/60 Hz UJ: 1 × 208-230 V, PE, 60Hz UK: 3 × 208-230 V, PE, 60Hz UL: 3 × 460-480 V, PE, 60Hz UX: Customized variant (special voltage rating)		Voltage code
A-	A: Systems with the breaker cabinet mounted on the system (right side) B: System with the wall-mounted breaker cabinet and 5 m cable C: Systems with the breaker cabinet mounted on the system (left side) O: Other control panel X: Customized variant		Design
A-	A: E		Starting method
A-	A: Stainless steel manifold and base frame(s), with standard valves B: Stainless steel manifold, base frame(s) and valves C: Galvanized steel manifold and base frame(s), with standard valves (for CME-A pumps) G: Galvanized steel manifold and base frame(s), with standard valves (for CRIE, CME-I pumps) H: Black painted carbon steel manifold and base frame, with standard valves I: Stainless steel manifold, black painted base frame(s), with standard valves J: Black painted mild steel manifold and base frame(s), with standard valves P: Stainless steel manifold, galvanized steel base frame, with standard valves X: Customized material combination		Material combination
A-	A: International range B: UK range C: Indian range E: Italian range F: French range G: Chinese range H: Korean range	I: APAC range J: Australian range K: Brazil range N: Dutch range P: Polish range U: US range Z: UAE range	Product range
ABC	A: Standard hydraulic C: Outlet sensor on each pump D: Sensor as dry-running protection E: No dry-running protection F: Level switch for dry-running protection G: CIM module included K: No inlet manifold	L: Non-return valve on the inlet side M: Pressure gauge on the inlet side O: PN 25 pressure rating S: Customized variant T: Certificate U: Undersized motors X: More than three options	Options

2.4.3 Identification of the operating panel

You can identify the operating panel in one of the following ways:

Grundfos GO

You can identify the operating panel in the **Fitted modules** menu under **Status**.

Motor display

For motors fitted with the HMI 300 or 301 operating panel, you can identify the operating panel in the **Fitted modules** menu under **Status**.

Motor nameplate

You can identify the operating panel with the data on the motor nameplate.

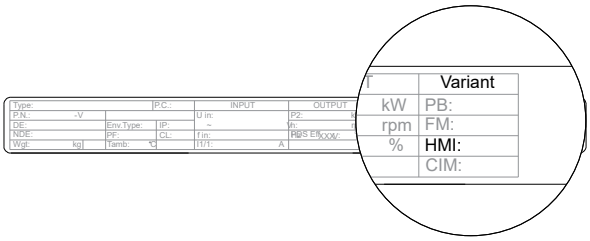

TM082852

Operating panel variants:

- HMI 200
- HMI 201 [1)]
- HMI 300
- HMI 301 [1)].

1) For motors without a radio module.

2.4.4 Identification of the functional module

You can identify the fitted module in one of the following ways:

Grundfos GO

You can identify the functional module in the **Fitted modules** menu under **Status**.

Motor display

For motors fitted with the HMI 300 or 301 operating panel, you can identify the functional module in the **Fitted modules** menu under **Status**.

Motor nameplate

You can identify the fitted module with the data on the motor nameplate.

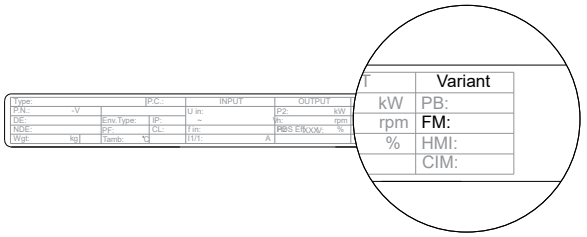

TM082851

Functional module variants:

- FM300
- FM310
- FM311 [2)].

2) Without Bluetooth (BLE).

3. Receiving the system

3.1 Transporting the system

Depending on the size, the system is supplied in a wooden cage, a closed wooden box, wrapped on a pallet or cardboard box designed for transport by a forklift truck or a similar vehicle.

3.2 Inspecting the system

Upon receiving the system, make sure that the delivery matches the order, all components are supplied and the packaging is intact.

3.3 Scope of delivery

The box contains the following:

- 1 Hydro Multi-E system
- installation and operating instructions for the system
- installation and operating instructions for the pump
- a quick guide for the system
- wiring diagrams for the breaker cabinet.

3.4 Handling and lifting the system

Only lift the system with the manifolds mounted to prevent the base frame from bending if the weight of the pumps are too high.

DANGER
Overhead load
Death or serious personal injury
- Do not use the eyebolts of the motors when you lift the system.
- Do not lift the system by the manifolds.

DANGER
Fall hazard
Death or serious personal injury
- Do not stand on the manifolds.

WARNING
Overhead load
Death or serious personal injury
- Do not stand under or close to the load that is lifted.
- Comply with local regulations when you lift or handle the system.

WARNING
Crushing of feet
Death or serious personal injury
- Before you lift the system, make sure that the lifting equipment is capable of handling the load, as listed on the nameplate and packaging label.

CAUTION
Overhead load
Minor or moderate personal injury
- Use appropriate lifting equipment when you place the system.

When you lift the system, the lifting point must always be above the center of gravity to ensure stability.

Systems with a base frame made of bent steel plate are designed with holes in the base frame for lifting.

- Use certified lifting gear suitable for the load. Each lifting strap must be at least 3 m long. Straps must be placed to ensure vertical pull to the system.
- Wind the safety strap around the pump head more than one time if there are no eyebolts or brackets on the pump.
- Keep the safety strap tight.
- Use shackles mounted in the holes for lifting the systems with a base frame made of bent steel plate.

! If the system is secured with transport straps, do not remove the straps until the system is installed.

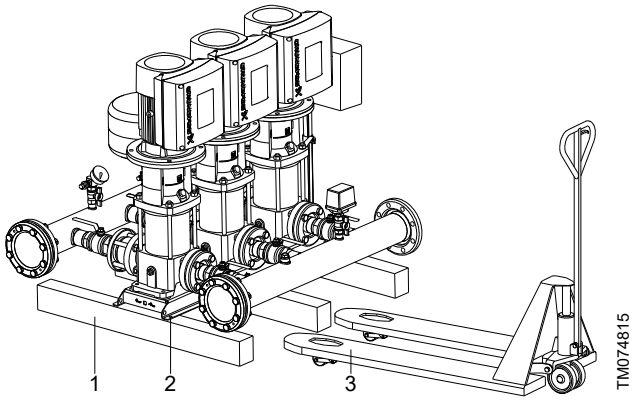

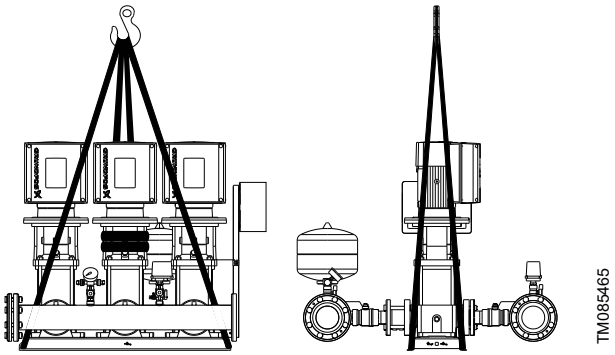

Lifting a system with a base frame made of bent steel plate

Pos.	Description
1	Wooden beam (included)
2	Wooden screws (included)
3	Forklift

4. Installation requirements

4.1 Location

The system is only designed for indoor installation and must not be exposed to direct sunlight.

- Install the system in a well-ventilated room to ensure sufficient cooling of the control panel and pumps.
- Install the system with a one-metre clearance on all sides for inspection and removal.

Related information

4.3 Motor cooling

4.2 Network interfaces and services

The system exposes the following network interfaces in the factory default state:

Interface	Description
RJ45	Wired Ethernet connectivity

The system exposes the following services over network interfaces in the factory default state:

Interface	Exposes service	Description
RJ45	GENIpro TCP	It is used for connecting the product to a service tool on an engineering workstation. Pairing is required before communication can take place. The GENIpro TCP pairing state is persistent.

4.3 Motor cooling

Observe the following to ensure adequate cooling of the motor and electronics.

- When installing the motor, make sure that the distance between the end of the fan cover and the wall or another fixed object is at least 50 mm (2 inches).
- Make sure that the ambient temperature must not exceed 40 °C.
- Keep cooling fins and fan blades clean.

5. Installing the system

WARNING
Crushing
Death or serious personal injury
- Use professional installation tools when you move or lift the system or its components.
- Use safety equipment when you mount the base frame.
- Use the supplied wooden beams to support the system when you mount the vibration dampers.
- Only trained persons can carry out the installation.

CAUTION
Overhead load
Minor or moderate personal injury
- Use appropriate lifting equipment when you place the system.

CAUTION
Crushing of feet
Minor or moderate personal injury
- Use safety equipment when you install the pipes and the tank.

CAUTION
Sharp element
Minor or moderate personal injury
- Wear safety gloves.

5.1 Mechanical installation

5.1.1 Foundation

Position the system on an even and solid surface, such as a concrete floor or foundation. If the system does not have vibration dampers, secure it to the floor or foundation with bolts.

5.1.2 Pipework

Arrows on the pump base show the direction of the water flow through the pump.

The pipes connected to the system must be of adequate size. Fit expansion joints in the inlet and outlet pipes to avoid resonance.

1. Connect the pipes to the manifolds of the system.
   The manifold has a screw cap at one end. If this end is to be used, remove the screw cap, apply sealing compound to the other end of the manifold, and fit the screw cap. Fit a blanking flange with a gasket on flanged manifolds.
2. Fasten all screws and bolts before starting the pump.
   If systems are installed in blocks of flats or the first consumer on the line is close to the system, we recommend that you fit expansion joints on the inlet and outlet pipes to prevent vibration from being transmitted through the pipes.
3. Fasten the pipes to parts of the building to ensure that the pipes cannot move or be twisted.

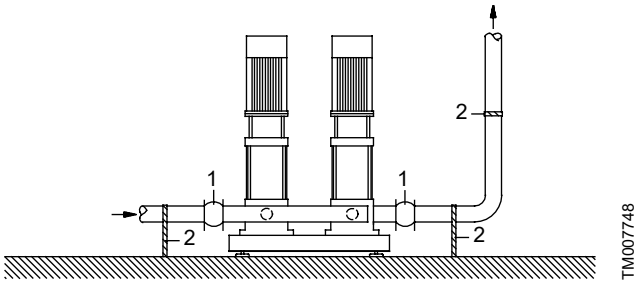

Installation example with expansion joints and pipe supports

Pos.	Description
1	Expansion joint
2	Pipe support (and recommended location for isolating valve)

The expansion joints and pipe supports shown in above figure are not included in the standard system.

5.1.3 Drain holes

The motor has a plugged drain hole in the flange on the drive side. You can turn the flange 90° to both sides or 180°.

With the drain hole open, the motor becomes self-venting, allowing water and humid air to escape.

When you open the drain hole, the enclosure class of the motor will be lower than standard.

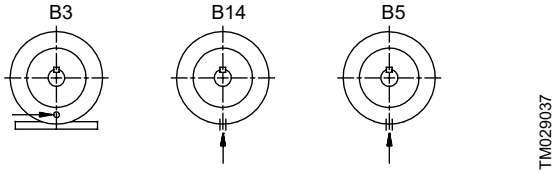

5.2 Electrical connection

DANGER
Electric shock
Death or serious personal injury
- Disconnect the power supply and make sure that the power supply cannot be accidentally switched on.
- Make sure that the wires connected to the connection groups are separated from each other by reinforced insulation along their entire lengths.

WARNING
Electric shock
Death or serious personal injury
- All electrical connections must be carried out by qualified persons and according to local regulations.

Check that the supply voltage and frequency correspond to the values stated on the nameplate.

If the power supply cable is damaged, it must be replaced by the manufacturer, the manufacturer's service partner or a person with similar qualifications.

The user or the installer is responsible for the installation of correct earthing and protection according to local regulations.

Secure and install the system in a place permanently. Furthermore, connect the system permanently to the power supply.

Carry out the earth connection with duplicate conductors.

If the system cannot be installed where the power disconnecting device is located at least 0.6 m above the service level as specified in EN 60204-1, paragraph 5.3.4, install the system with an external supply disconnecting device made according to EN 60204-1, paragraph 5.3.2. The system must be provided with a device that can lock it in OFF (isolated) position.

5.2.1 Electrical supply system

DANGER
Electric shock
Death or serious personal injury
- Connect the system to protective earth and provide protection against indirect contact in accordance with local regulations.

Protective-earth conductors must have a yellow and green (PE) or yellow, green and blue (PEN) colour marking.

Check that the supply voltage and frequency correspond to the values stated on the nameplate.

If you want to supply the system through an IT network, make sure that you have a suitable system variant. If you are in doubt, contact Grundfos.

The internal EMC filter remains connected, and subsequently no reduced leakage current variant is available.

The wires in the breaker cabinet must be as short as possible. However, the separate earth conductor is an exception. Its length must be long enough so that it is the last one to be disconnected in case the cable is inadvertently pulled out of the cable entry.

For the maximum backup fuse, see section Supply voltage.

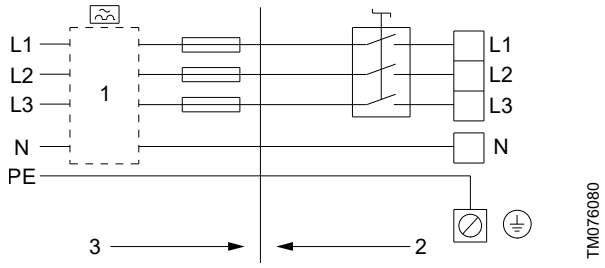

Example of a mains-connected system with backup fuses and additional protection (applies only for systems with single-phase motors)

Pos.	Description
1	ELCB (GFCI)
2	Breaker cabinet
3	Installation in building

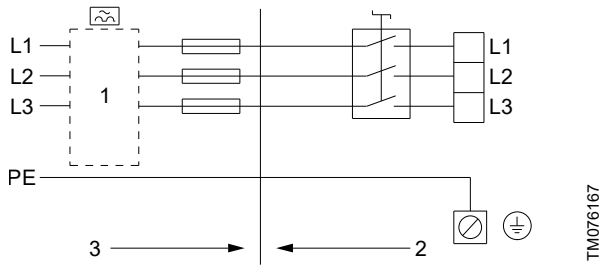

Example of a mains-connected system with backup fuses and additional protection (applies only for systems with three-phase motors)

Pos.	Description
1	ELCB (GFCI)
2	Breaker cabinet
3	Installation in building

Related information

13.2 Supply voltage

5.2.2 Motor protection

All models (including H and I): The motor incorporates thermal protection against slow overloading and blocking. No external motor protection is required.

Model J: The product includes load and speed sensitive motor overload protection.

Model K: The product includes load and speed sensitive motor overload protection with thermal memory retention.

The motor is also protected against power supply voltage transients in accordance with EN 61800-3.

5.2.3 Insulation resistance

Do not measure the insulation resistance of motor windings or an installation incorporating motors with integrated frequency converters using high-voltage megging equipment, as this may damage the built-in electronics.

5.2.4 Additional protection

Systems with single-phase motors

If the system is connected to an electric installation where an earth leakage circuit breaker (ELCB) or ground fault circuit interrupter (GFCI) is used as additional protection, this circuit breaker or interrupter must be marked with the following symbol:

	ELCB (GFCI)	RDC Type A

When an earth leakage circuit breaker or ground fault circuit interrupter is selected, the total leakage current of all the electrical equipment in the installation must be taken into account.

The leakage current of the system can be found in section Leakage current.

Systems with three-phase motors

If the system is connected to an electric installation where an earth leakage circuit breaker (ELCB) or ground fault circuit interrupter (GFCI) is used as additional protection, this circuit breaker or interrupter must have the following capabilities:

- It must be suitable for handling leakage currents and cutting-in with short pulse-shaped leakage.
- It must trip in the event of alternating fault currents and fault currents with DC content, such as pulsating DC and smooth DC fault currents.

You must use a type B earth leakage circuit breaker or a ground fault circuit interrupter for the system.

This circuit breaker or interrupter must be marked with the following symbols:

		ELCB (GFCI)	RDC Type B

The leakage current of the system can be found in section Leakage current.

Protection against phase unbalance

Phase unbalance in the power supply must be minimised.

The three-phase motor must be connected to a power supply that meets the quality requirements specified in IEC 60146-1-1, class C. This also ensures long life of the components.

Related information

13.3 Leakage current

5.3 Functional modules

The functional modules are add-on boards that contain various types of input and output terminals for the user to connect different types of sensors, switches and relays.

The system can only contain one functional module at the time.

The following functional modules are available:

- FM300
- FM310
- FM311 [3].

3) Without Bluetooth (BLE).

The selection of module depends on the application and the required number of inputs and outputs.

Cable connections

The screen of signal cables and bus connection cables must be grounded via one of the earth clamps (H).

See the section on signal cables and bus connection cables.

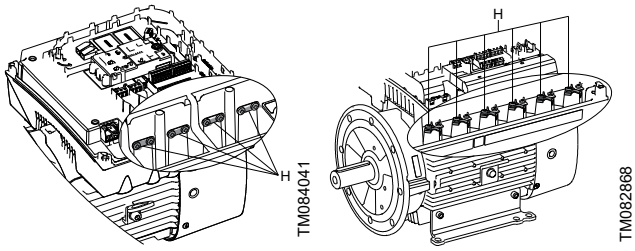

Model J *Model K*

Related information

2.4.4 Identification of the functional module

5.5 Signal cables

5.3.1 Functional module, FM300

Inputs and outputs

The module has these connections:

- three analog inputs
- one analog output
- two dedicated digital inputs
- two configurable digital inputs or open-collector outputs
- Grundfos Digital Sensor input and output
- two Pt100/1000 inputs
- two LiqTec sensor inputs
- two signal relay outputs
- GENIbus connection.

Signal relay 1

LIVE: You can connect supply voltages up to 250 VAC to the output.

PELV: The output is galvanically separated from other circuits. Therefore, you can connect the supply voltage or protective extra-low voltage to the output as desired.

Signal relay 2

PELV: The output is galvanically separated from other circuits. Therefore, you can connect the supply voltage or protective extra-low voltage to the output as desired.

Connection terminals for inputs and outputs

DANGER
Electric shock
Death or serious personal injury
- Make sure that the wires to be connected to the relays below are separated from each other by reinforced insulation along their entire lengths.

The inputs and outputs are internally separated from the power supply-conducting parts by reinforced insulation and galvanically separated from other circuits. All control terminals are supplied by protective extra-low voltage (PELV), ensuring protection against electric shock.

Cables for the relays must be double insulated or reinforced and rated at least 250V/2A.

The Ethernet cable must be rated at least Cat5e/Cat6 with screening.

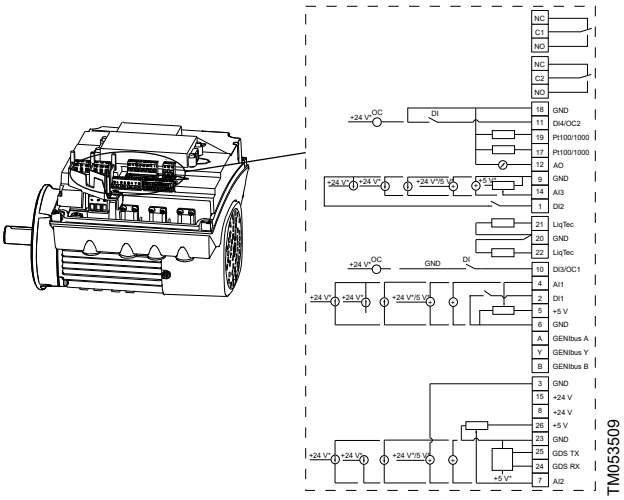

* If you use an external supply source, it must be connected to GND.

Terminal	Type	Function
NC	Normally closed contact	Signal relay 1: LIVE or PELV
C1	Common	
NO	Normally open contact	
NC	Normally closed contact	Signal relay 2: PELV only
C2	Common	
NO	Normally open contact	
18	GND	Signal ground
11	DI4/OC2	Digital input/output, configurable Open collector: Maximum 24 V resistive or inductive
19	Pt100/1000 input 2	Pt100/1000 sensor input
17	Pt100/1000 input 1	Pt100/1000 sensor input
12	AO	Analog output: • 0-20 mA or 4-20 mA • 0-10 V.
9	GND	Signal ground
14	AI3	Analog input: • 0-20 mA or 4-20 mA • 0-10 V
1	DI2	Digital input, configurable
21	LiqTec sensor input 1	LiqTec sensor input (white conductor)
20	GND	Signal ground (brown and black conductors)
22	LiqTec sensor input 2	LiqTec sensor input (blue conductor)
10	DI3/OC1	Digital input/output, configurable Open collector: Maximum 24 V resistive or inductive

Terminal	Type	Function
4	AI1	Analog input: • 0-20 mA or 4-20 mA • 0.5 - 3.5 V, 0-5 V or 0-10 V.
2	DI1	Digital input, configurable Digital input 1 is factory-set to be the start-stop input for the situation when an open circuit results in a stop. A jumper is factory-fitted between terminals 2 and 6. Remove the jumper if you want to use digital input 1 for external start-stop or any other external function.
5	+5 V	Supply to potentiometer and sensor
6	GND	Signal ground
A	GENIbus, A	GENIbus, A (+)
Y	GENIbus, Y	GENIbus, GND
B	GENIbus, B	GENIbus, B (-)
3	GND	Signal ground
15	+24 V	Supply
8	+24 V	Supply
26	+5 V	Supply to potentiometer and sensor
23	GND	Signal ground
25	GDS TX	Grundfos Digital Sensor output
24	GDS RX	Grundfos Digital Sensor input
7	AI2	Analog input: • 0-20 mA or 4-20 mA • 0.5 - 3.5 V, 0-5 V or 0-10 V.

5.3.2 Functional module, FM310 and FM311

Inputs and outputs

The FM311 functional module does not include Bluetooth connection.

The module has these connections:

- three analog inputs
- one analog output
- two dedicated digital inputs
- two configurable digital inputs or open-collector outputs
- Grundfos Digital Sensor input and output
- two Pt100/1000 inputs
- two LiqTec sensor inputs
- two signal relay outputs
- GENIbus/Modbus connection
- two Safe Torque Off (STO) inputs
- Ethernet connection
- Bluetooth (BLE) connection[4].

4) FM311 is without Bluetooth.

Signal relay 1

LIVE: You can connect supply voltages up to 250 VAC to the output.

SELV: The output is galvanically separated from other circuits. Therefore, you can connect the supply voltage or safety extra-low voltage to the output as desired.

Signal relay 2

SELV: The output is galvanically separated from other circuits. Therefore, you can connect the supply voltage or safety extra-low voltage to the output as desired.

Connection terminals for inputs and outputs

DANGER
Electric shock
Death or serious personal injury
- Make sure that the wires to be connected to the relays below are separated from each other by reinforced insulation along their entire lengths.

Digital input 1 is factory-set to be the start-stop input when open circuit results in stop. A jumper is factory-fitted between terminals 2 and 6. Remove the jumper if digital input 1 is to be used as external start-stop or any other external function.

The inputs and outputs are internally separated from the power supply-conducting parts by reinforced insulation and galvanically separated from other circuits. All control terminals are supplied with safety extra-low voltage (SELV), ensuring protection against electric shock.

Cables for the relays must be double insulated or reinforced and rated at least 250V/2A.

The Ethernet cable must be rated at least Cat5e/Cat6 with screening.

The 250 V contacts of the alarm relay (NC/C1/NO) on the functional modules FM310 and FM311 must not be connected directly to the mains supply, but energised by an isolated power supply or transformer with galvanic isolation.

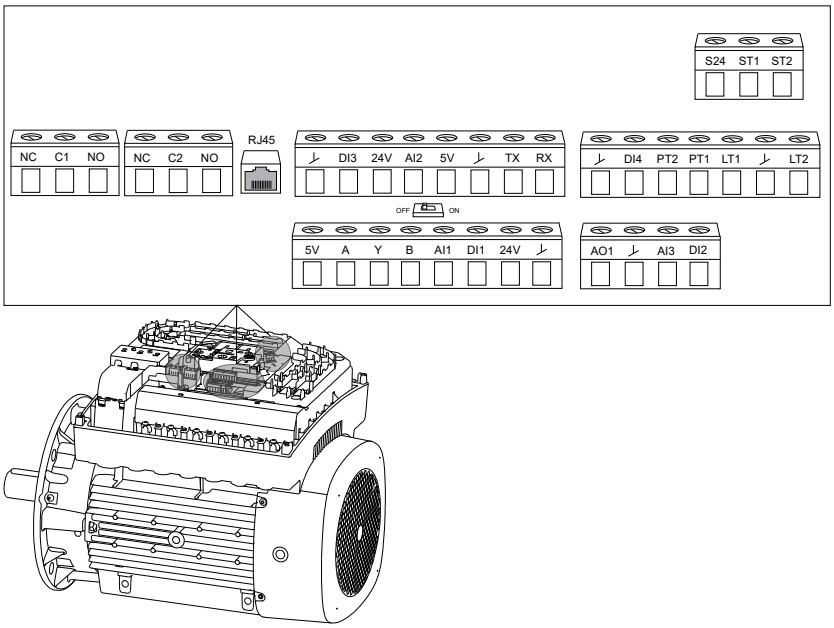

TM082862

Terminal	Type	Function
NC	Normally closed contact	Signal relay 1: LIVE or SELV
C1	Common	
NO	Normally open contact	
NC	Normally closed contact	Signal relay 2: SELV only
C2	Common	
NO	Normally open contact	
RJ45	Ethernet	Ethernet communication
GND	GND	Signal ground
DI3	DI3/OC1	Digital input/output, configurable Open collector: Maximum 24 V resistive or inductive
24V	+24 V	Power supply
AI2	AI2	Analog input: • 0-20 mA or 4-20 mA • 0.5 - 3.5 V, 0-5 V or 0-10 V.
5V	+5 V	Power supply to a potentiometer or sensor
GND	GND	Signal ground
TX	GDS TX	Grundfos Digital Sensor output
RX	GDS RX	Grundfos Digital Sensor input
GND	GND	Signal ground
DI4	DI4/OC2	Digital input/output, configurable Open collector: Maximum 24 V resistive or inductive
PT2	Pt100/1000 input 2	Pt100/1000 sensor input 2
PT1	Pt100/1000 input 1	Pt100/1000 sensor input 1
LT1	LiqTec sensor input 1	LiqTec sensor input 1 White conductor
GND	GND	Signal ground Brown and black conductors
LT2	LiqTec sensor input 2	LiqTec sensor input 2 Blue conductor
5V	+5 V	Power supply to a potentiometer or sensor
A	GENIbus, A	GENIbus, A (+) / Modbus, D1 (+)
Y	GENIbus, Y	GENIbus, GND / Modbus, GND
B	GENIbus, B	GENIbus, B (-) / Modbus, D0 (-)

Terminal	Type	Function
AI1	AI1	Analog input: • 0-20 mA or 4-20 mA • 0.5 - 3.5 V, 0-5 V or 0-10 V.
DI1	DI1	Digital input, configurable Digital input 1 is factory-set to be start-stop input for the situation when an open circuit results in a stop. A jumper is factory-fitted between terminals DI1 and GND. Remove the jumper if you want to use digital input 1 for external start-stop or any other external function.
24V	+24 V	Power supply
GND	GND	Signal ground
AO1	AO	Analog output: • 0-20 mA or 4-20 mA • 0-10 V.
GND	GND	Signal ground
AI3	AI3	Analog input: • 0-20 mA or 4-20 mA • 0.5 - 3.5 V, 0-5 V or 0-10 V.
DI2	DI2	Digital input, configurable
S24	+24 V (STO)	Power supply to the Safe Torque Off inputs
ST1	STO1	Safe Torque Off - Input 1
ST2	STO2	Safe Torque Off - Input 2

5.4 Signal relays

The motor has two outputs for potential-free signals via two internal relays. You can set the signal outputs to **Operation**, **Pump running**, **Ready**, **Alarm** and **Warning**.

The functions of the two signal relays appear from the table below.

Grundfos Eye is off

The power is off.

Operation	Pump running	Ready	Alarm	Warning	Operating mode
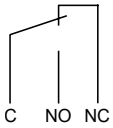	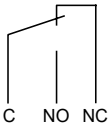	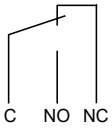	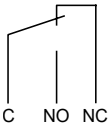	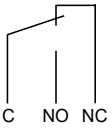	-

Grundfos Eye is rotating green

The pump runs in **Normal** mode in open or closed loop.

Operation	Pump running	Ready	Alarm	Warning	Operating mode
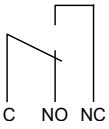	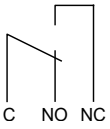	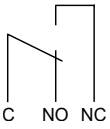	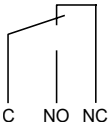	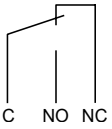	**Normal** **Min.** or **Max.**

Grundfos Eye is rotating green

The pump runs in **Manual** mode.

Operation	Pump running	Ready	Alarm	Warning	Operating mode
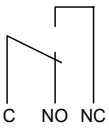	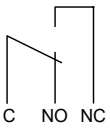	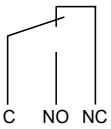	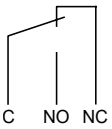	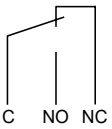	**Manual**

Grundfos Eye is permanently green

The pump is ready for operation but is not running.

Operation	Pump running	Ready	Alarm	Warning	Operating mode
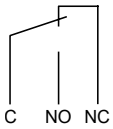	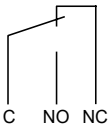	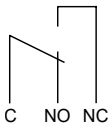	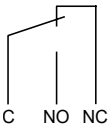	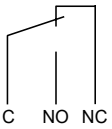	**Stop**

Grundfos Eye is rotating yellow

Warning, but the pump is running.

Operation	Pump running	Ready	Alarm	Warning	Operating mode
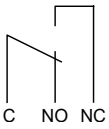	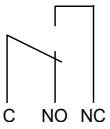	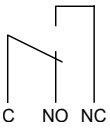	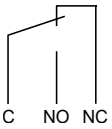	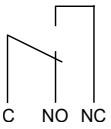	**Normal** **Min.** or **Max.**

Grundfos Eye is rotating yellow

Warning, but the pump is running.

Operation	Pump running	Ready	Alarm	Warning	Operating mode
	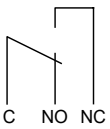	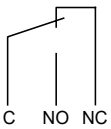	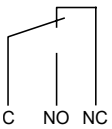	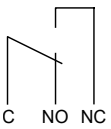	**Manual**

Grundfos Eye is permanently yellow

Warning, but the pump is stopped via a **Stop** command.

Operation	Pump running	Ready	Alarm	Warning	Operating mode
C NO NC	C NO NC	C NO NC	C NO NC	C NO NC	**Stop**

Grundfos Eye is rotating red

Alarm, but the pump is running.

Operation	Pump running	Ready	Alarm	Warning	Operating mode
C NO NC	C NO NC	C NO NC	C NO NC	C NO NC	**Normal** **Min.** or **Max.**

Grundfos Eye is rotating red

Alarm, but the pump is running.

Operation	Pump running	Ready	Alarm	Warning	Operating mode
C NO NC	C NO NC	C NO NC	C NO NC	C NO NC	**Manual**

Grundfos Eye is flashing red

The pump is stopped due to an alarm.

Operation	Pump running	Ready	Alarm	Warning	Operating mode
C NO NC	C NO NC	C NO NC	C NO NC	C NO NC	**Stop**

5.5 Signal cables

Use screened cables with a cross-sectional area from 0.5 mm^2 to 1.5 mm^2 for the external on/off switch, digital inputs, setpoint and sensor signals.

The wires in the motor terminal box must be as short as possible.

5.5.1 Connecting signal cables

1. Connect the screens of the cables to the frame securely at both ends. The screens must be as close as possible to the terminals.

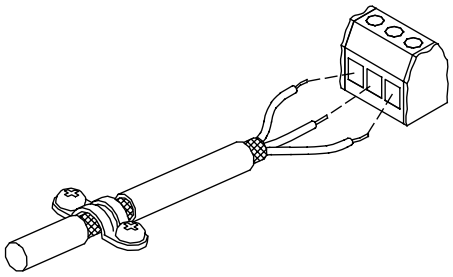

TM021325

2. Connect the signal cables to the terminals.
3. Depending on the model, tighten one or two earth clamp screws.
   Always tighten screws for frame connections, whether a cable is fitted or not.

5.6 Installing a communication interface module

Always install the CIM module in pump 1. If there is a need for redundant communication, an additional CIM module can be installed in pump 2.

When using multiple CIM modules, make sure to send the same command to both CIM modules at the same time to avoid conflicts between CIM modules.

See the installation and operating instructions of the pump for installation.

5.6.1 Communication interface modules and protocols

The following communication interface modules can be used for the system. CIM modules are optional equipment which can be ordered separately.

CIM	Protocol	Part number
CIM 110	LONWorks	96824798
CIM 150	PROFIBUS DP	96824793
CIM 200	Modbus RTU	96824796
CIM 290-MA	LPWAN GiC	92865300
CIM 300	BACnet MS/TP	96893770
CIM 500	PROFINET IO, Modbus TCP, Ethernet/IP, BACnet IP	98301408
CIM 550	Ethernet GiC	92546689

6. Starting up the system

DANGER
Electric shock
Death or serious personal injury

- Disconnect the power supply and wait at least five minutes before you make any connections in the breaker cabinet or control panel.
- Before you start the system, make sure that the power supply is disconnected and cannot be accidentally switched on.
- Tighten the wire connections.

DANGER
Electric shock
Death or serious personal injury

- Connect the motor to protective earth and provide protection against indirect contact according to local regulations.
- Before you start the system, make sure that there is no short-circuit.

WARNING
Contaminated drinking water
Death or serious personal injury

- Flush the system before you start it in compliance with local legislation.

WARNING
High temperature
Death or serious personal injury

- Before you operate, make sure that the system can handle the load specified on the nameplate.

CAUTION
Hot surface
Minor or moderate personal injury

- Make sure that the escaping hot liquid does not cause injury to persons or damage to the equipment.
- Do not touch wet components.

CAUTION
High noise level
Minor or moderate personal injury

- Use ear protection.

CAUTION
Sharp element
Minor or moderate personal injury

- Wear safety gloves.

Make sure that the the main switch and the circuit breakers are switched off.

Do not start the pumps until they are filled with liquid.

Systems with CME pumps require a positive inlet pressure during startup and operation. The following startup procedure therefore only applies to systems with CRE or CRIE pumps.

Make sure that the dry-running protection device is appropriate for no or low inlet pressure.

After you complete the mechanical and electrical installation described in section Installing the system, proceed as follows:

1. Check that the system corresponds to the order and that no single parts are damaged.
2. Check that the precharge pressure in the diaphragm tank is 0.7 times the required outlet pressure (setpoint).

Measure the precharge pressure while the system is pressureless.

3. Connect water and power supplies to the system.
4. Open all pump inlet valves.
5. Close all pump outlet valves, and prime all pumps and the inlet pipe.

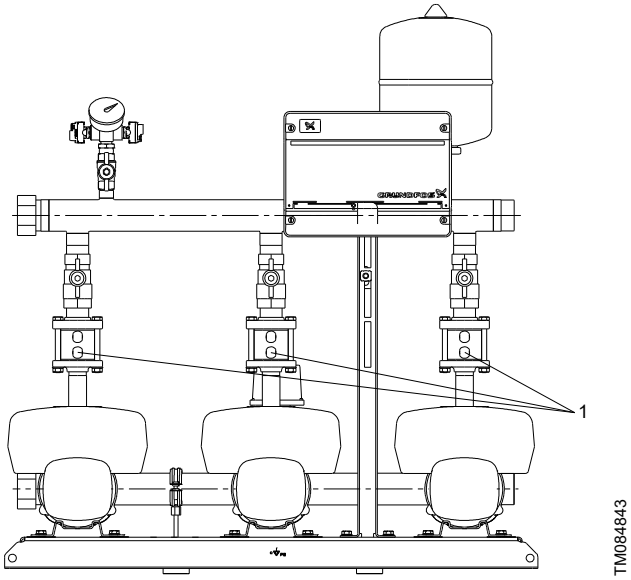

Position of vent screw in systems with CME pumps

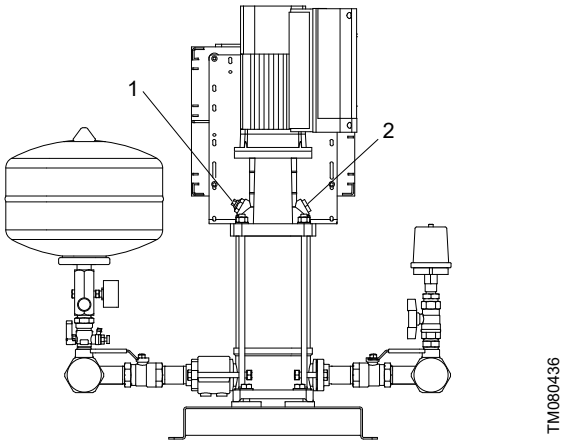

Position of vent screw and filling screw in systems with CRE pumps

Pos.	Description
1	Vent screw
2	Filling screw

6. Switch on the main switch.
7. Start pump 1 by pressing the start/stop button on the pump operating panel.
8. Vent pump 1 using the vent screw.
9. Gradually open the outlet valve and maintain a small flow until all trapped air has been expelled from the pump.
10. Repeat steps 7 and 9 for the other pumps in the system.
11. Set the desired outlet pressure.

If you change the outlet pressure, change the diaphragm tank precharge pressure accordingly.

12. Check that the pumps are cutting in and out, thus adjusting the performance to the demand.

The system is now in automatic mode and ready for operation. The standard settings can be changed using Grundfos GO, see sections Multi-pump function or Control functions.

Related information

5. *Installing the system*
7. *Control functions*
8. *Multi-pump function*

7. Control functions

WARNING
Hot surface
Death or serious personal injury
- Touch only the buttons on the operating panel. The product may be very hot.

WARNING
Electric shock
Death or serious personal injury
- If the operating panel is cracked or perforated, replace it immediately. Contact the nearest Grundfos sales company.

You can change the settings by means of the following user interfaces:

- HMI operating panel
- Grundfos GO
- Grundfos GO Link.

All settings are saved if the power supply is switched off.

For the control functions of user interfaces, see the installation and operating instructions of the pump.

7.1 Grundfos Eye

Grundfos Eye is an indicator light on the operating panel. It indicates the operating condition of the motor.

Grundfos Eye indicator light (A)

Indicator light	Indication	Description
	No lights are on.	**Power off** The motor is not running.
	Two opposite green indicator lights are rotating in the same direction as the motor when seen from the non-drive end.	**Power on** The motor is running.
	Two opposite green indicator lights are permanently on.	**Power on** The motor is not running.
	One yellow indicator light is rotating in the same direction as the motor when seen from the non-drive end.	**Warning** The motor is running with a warning.
	One yellow indicator light is permanently on.	**Warning** The motor has stopped.
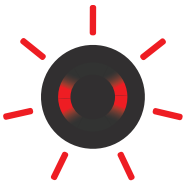	Two opposite red indicator lights are flashing simultaneously.	**Alarm** The motor has stopped.
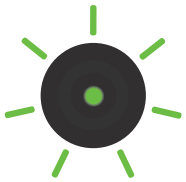	The green indicator light in the middle flashes quickly four times.	Grundfos Eye flashes four times when you press the Grundfos Eye symbol next to the motor name in Grundfos GO.
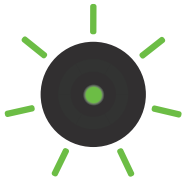	The green indicator light in the middle is flashing continuously.	You have selected the motor in Grundfos GO, and the motor is ready to be connected.
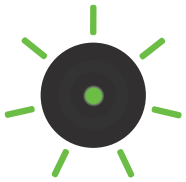	The green indicator light in the middle flashes quickly for a few seconds.	The motor is controlled by Grundfos GO or exchanging data with Grundfos GO.
	The green indicator light in the middle is permanently on.	The motor is connected to Grundfos GO.

8. Multi-pump function

Systems with two or more outlet-pressure sensors

If two or more pumps in the system are configured with an outlet-pressure sensor (standard option), they can all function as master pumps. Normally, the pump with the lowest number is the master pump. At the factory, the master pump is marked with number 1.

If master pump 1 is switched off or stopped due to an alarm, one of the other master pumps will automatically take control of the system.

9. Setting the system

You can set control functions via Grundfos GO, Grundfos GO Link or the operating panel. The system is delivered from factory in constant pressure control mode. The system can be used in different control modes, with an additional sensor that complies to the control mode.

- If only one function name is mentioned, it refers to both Grundfos GO and the operating panel.
- If a function name is mentioned in a parenthesis, it refers to a function on the operating panel.

Function	Menu or function available for the pump	Menu or function available for the system
Control mode		●
Setpoint		●
Operating mode		●
Set manual speed	●	
Set user-defined speed	●	
Set the proportional pressure		●
Analog inputs	●	
Grundfos Direct Sensor	●	
Pt100/1000 inputs	●	
Digital inputs	●	
Digital inputs/outputs	●	
Signal relay (Relay outputs)	●	
Analog output	●	
Operating range	●	
External setpoint function	●	●
Predefined setpoints		●
Limit-exceeded function	●	●
LiqTec (LiqTec function)	●	
Stop function (Low-flow stop function)		●
Stop at min. speed		●
Pipe filling function		●
Pulse flowmeter (Pulse flowmeter setup)	●	●
Ramps	●	
Direction of rotation	●	
Standstill heating	●	
Alarm handling	●	
Motor bearing monitoring	●	
Service intervals	●	
Communication	●	
Date and time (Set date and time)	●	
Unit configuration (Units)	●	
Buttons on product (Enable/disable settings)	●	
Delete history	●	
Define Home display	●	
Display settings	●	
Store settings (Store actual settings)	●	
Recall settings (Recall stored settings)	●	
Undo	●	
Pump name	●	
Connection code	●	
Run start-up guide	●	
Alarm log	●	●
Warning log	●	●
Assist	●	
Assisted pump setup	●	
Multi-pump function	●	●
Assisted fault advice	●	●

For detailed information on setting the system, see the installation and operating instructions of the pump.

9.1 Priority of settings

With Grundfos GO, you can set the motor to operate at maximum speed or to stop.

If two or more functions are enabled at the same time, the motor operates according to the function with the highest priority.

If you have set the motor to maximum speed via the digital input, the motor operating panel or Grundfos GO can only set the motor to **Manual** or **Stop**.

The priority of the settings appears from the table below.

Priority	Start/stop button	Grundfos GO or operating panel	Digital input	Bus communication
1	**Stop**			
2		**Stop** [5]		
3		**Manual**		
4		**Maximum speed** [5] / **User defined speed**		
5			**Stop**	
6			**User defined speed**	
7				**Stop**
8				**Maximum speed** / **User defined speed**
9				**Minimum speed**
10				**Start**
11			**Maximum speed**	
12		**Minimum speed**		
13			**Minimum speed**	
14			**Start**	
15		**Start**		

[5] **Stop** and **Maximum speed** settings made with Grundfos GO or the operating panel can be overruled by another operating-mode command sent from a bus, for example **Start**. If the bus communication is interrupted, the motor resumes its previous operating mode, for example **Stop**, that is selected with Grundfos GO or the operating panel.

10. Protective functions

Make sure that any protective function, for example dry-running protection or external start/stop that is detected via a digital input, is connected to and configured on all the pumps with an outlet-pressure sensor.

If an additional sensor is used, for example, a sensor with the limit-exceeded function or setpoint influence, this sensor must also be connected to all pumps with an outlet-pressure sensor. Alternatively, you can install an additional sensor for each pump with an outlet-pressure sensor.

10.1 Dry-running protection

! The system must be protected against dry running.

Types of dry-running protection:

- A pressure switch or an inlet-pressure sensor is factory-fitted to the inlet manifold. See sections Pressure switch and Inlet pressure sensor.
- A level switch is fitted in a water tank (optional). See section Level switch.

Related information

10.1.1 Pressure switch

10.1.2 Level switch

10.1.3 Inlet-pressure sensor

10.1.1 Pressure switch

The system can be fitted with an adjustable pressure switch for dry-running protection. The pressure switch is fitted to the inlet manifold.

! If the inlet pressure is below the lower switching point, the system cannot start.

If the pressure switch has stopped the system during operation due to insufficient inlet pressure, the inlet pressure must increase to a level higher than the upper switching point before the system can restart.

If necessary, adjust the lower switching point by turning screw A and adjust the upper switching point to a value higher than the lower switching point by turning screw B. See figure below.

! Do not set the lower switching point to a value below the minimum inlet pressure. See section Minimum inlet pressure.

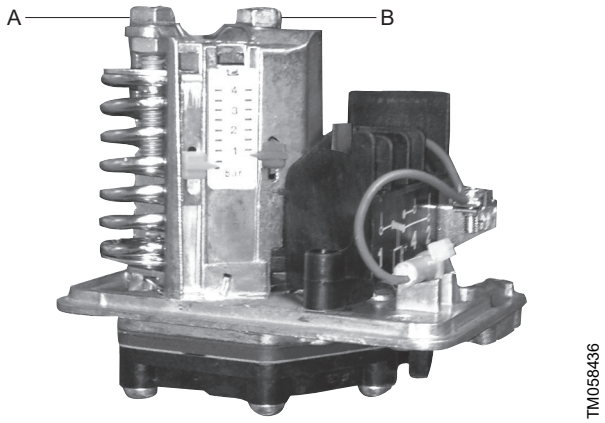

Adjustment of switching points

Pos.	Description
A	Low pressure switching point
B	High pressure switching point

Related information

13.1.5 Minimum inlet pressure

10.1.2 Level switch

If there is no inlet pressure, the system can be optionally fitted with a level switch, either from factory or after delivery. The level switch can, for instance, monitor the water level in a tank connected to the inlet manifold. And the level switch must be connected to terminal 3 and 10 in all pumps. See section Functional modules.

Furthermore, the digital input must be configured with Grundfos GO to detect dry running.

The system starts up automatically if it is stopped due to dry running. It can be set to manual restart with Grundfos GO.

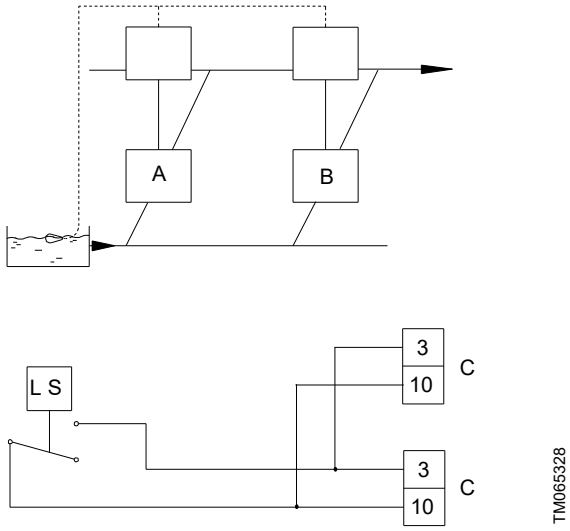

Level switch connected to each pump

Pos.	Description
A	Pump 1
B	Pump 2
C	3: GND (frame) 10: Digital input

Related information

5.3 Functional modules

10.1.3 Inlet-pressure sensor

The system can be fitted with one or two inlet-pressure sensors, either from factory or after delivery. The sensor can monitor the pressure in the inlet manifold and must be connected to one of the analog input. See section Functional modules.

The analog input is configured with Grundfos GO or via the HMI 300 and 301 operating panels. The limit-exceeded function can be configured to detect dry running. From factory the system is set to start automatically if it is stopped due to dry running. It can be changed to manual restart with Grundfos GO or via the HMI 300 and 301 operating panels.

Related information

5.3 Functional modules

11. Servicing the system

DANGER
Electric shock
Death or serious personal injury
- Before you maintain the system, make sure that the power supply is disconnected and cannot be accidentally switched on.

WARNING
Contaminated drinking water
Death or serious personal injury
- Flush the system after a standstill period in compliance with local legislation.

WARNING
Overhead load
Death or serious personal injury
- Wear a safety helmet.

CAUTION
Overhead load
Minor or moderate personal injury
- Use appropriate tools and lifting equipment for maintenance.

11.1 Maintaining the system

11.1.1 Pumps

Pump bearings and shaft seals do not require maintenance.

If pumps are to be drained for a long period of inactivity, remove one of the coupling guards to apply a few drops of silicone oil on the shaft between the pump head and the coupling. This will prevent the shaft seal faces from sticking.

11.1.2 Motors

Keep motor cooling fins and fan blades clean to ensure sufficient cooling of the motor and electronics.

Motors above 7.5 kW must be lubricated according to the recommended intervals and with correct type of bearing grease stated on the motor.

11.1.3 Breaker cabinet

The breaker cabinet does not require maintenance. Keep it clean and dry.

11.1.4 Service kits

See Grundfos Product Center at www.grundfos.com for service manuals.

11.2 Taking the system out of operation

DANGER
Electric shock
Death or serious personal injury
- Make sure that the power supply is disconnected and cannot be accidentally switched on.

Drain the system if you are not going to use it for a long time.

1. Switch off the main switch to take the system out of operation.
2. Switch off the corresponding motor protective circuit breaker and the automatic circuit breaker to take the individual pump out of operation.

11.2.1 Frost protection

If pumps are not used during periods of frost, they must be drained to avoid damage.

Drain the pump by loosening the vent screw in the pump head and removing the drain plug from the base.

Do not tighten the vent screw or refit the drain plug until the system is to be used again.

11.3 Startup the system after standstill

WARNING
Contaminated drinking water
Death or serious personal injury
- Flush the system after a standstill period in compliance with local legislation.

See section Starting up the system for further instructions.

Related information

6. Starting up the system

12. Fault finding

DANGER
Electric shock
Death or serious personal injury

- Switch off the power supply and wait at least five minutes before you make any connections in the breaker cabinet or control panel.
- Make sure that the power supply is disconnected and cannot be accidentally switched on.

12.1 The system does not run when started

The system does not run when started.

Cause	Remedy
The actual pressure is higher than or equal to the setpoint.	Wait until the pressure drops, or decrease the pressure on the outlet side of the system, and check if the system starts.
The power supply is disconnected.	Connect the power supply.
The circuit breakers have cut out.	Correct the fault and cut in the circuit breakers.
The internal motor protection is activated.	Contact Grundfos.
The circuit breaker is defective.	Replace the circuit breaker.
The motor is defective.	Repair or replace the motor.
Outlet-pressure sensor fault. • The outlet-pressure sensor is defective. • The cable is broken or short-circuited.	• Replace the outlet-pressure sensor. • Repair or replace the cable.

12.2 The system starts but stops immediately afterwards

The system starts but stops immediately afterwards. The operating pressure is not reached.

Cause	Remedy
Dry running or no inlet pressure.	Check the water supply to the system. When the inlet pressure is re-established, the pumps will restart after 15 seconds.

12.3 The system stops and cannot restart

The system stops and cannot restart.

Cause	Remedy
Outlet-pressure sensor fault. • The outlet-pressure sensor is defective. • The cable is broken or short-circuited.	• Replace the outlet-pressure sensor. Outlet-pressure sensors with 0-20 mA or 4-20 mA output signals are monitored by the system. • Repair or replace the cable.
Terminal box unit fault. • The power supply is disconnected on pump 1. • The terminal box is defective.	• Connect the power supply. • Replace the terminal box of pump 1. • Contact Grundfos.

12.4 Unstable water supply from the system

The water supply from the system is unstable (only applies to very low consumption).

Cause	Remedy
The inlet pressure is too low.	Check the inlet pipe and possible inlet strainer.
The inlet pipe or pumps are partly blocked by impurities.	Clean the inlet pipe or pumps.
The pumps suck air.	Check the inlet pipe for leakages.
The outlet-pressure sensor is defective.	Replace the outlet-pressure sensor.

12.5 Pumps are running but deliver no water

Pumps are running but deliver no water.

Cause	Remedy
The inlet pipe or pumps are blocked by impurities.	Clean the inlet pipe or pumps.
The non-return valve is blocked in the closed position.	Clean the non-return valve. The non-return valve must move freely.
The inlet pipe is leaky.	Check the inlet pipe for leakages.
Air in the inlet pipe or pumps.	Vent the pumps. Check the inlet pipe for leakages.

12.6 The system cannot reach the setpoint

The system cannot reach the setpoint.

Cause	Remedy
The cable is broken or short-circuited (GENIbus communication between pump 1 and pump 2 or 3).	Repair or replace the cable.
Pump 2 or 3 does not operate.	Connect the power supply to the pump and check the pump condition.

12.7 Leakage from a shaft seal

The shaft seal has leakage.

Cause	Remedy
The shaft seal is defective.	Replace the shaft seal.
The height adjustment of the pump shaft is inaccurate.	Re-adjust the shaft height.

12.8 There is noise when the pumps are operating

There is noise when the pumps are operating.

Cause	Remedy
The pumps are cavitating.	Clean the inlet pipe or pumps, and if necessary, the inlet strainer.
The pumps do not rotate freely (frictional resistance) due to inaccurate height of the pump shaft.	Re-adjust the shaft height. See the installation and operating instructions of the pump supplied with the system.

12.9 Very frequent starts and stops

The starts and stops of pumps are frequent.

Cause	Remedy
Wrong diaphragm tank precharge pressure.	Check the precharge pressure.
The difference between start and stop pressures is too small.	Increase the differential pressure setting on each pressure switch.
This situation only occurs in systems with emergency operation.	

13. Technical data

13.1 Operating conditions

13.1.1 Installation altitude

Installation altitude is the height above sea level of the installation site. Motors installed below 1000 m above sea level can be loaded 100 %. The motors can be installed up to 3500 m above sea level.

Motors installed more than 1000 m above sea level must not be fully loaded due to the low air density, which affects the cooling efficiency.

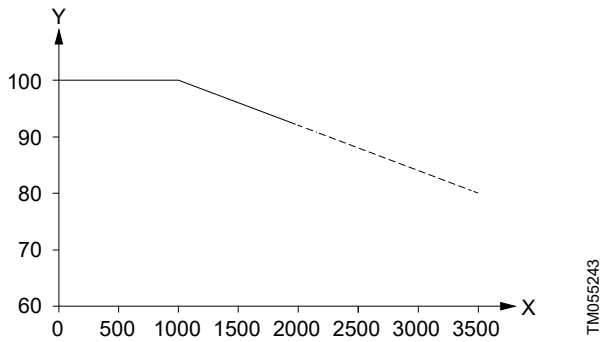

Motor output power in relation to altitude

Pos.	Description
X	Altitude [m]
Y	P2 [%]

In order to maintain the galvanic isolation and ensure correct clearance according to EN 60664-1:2007, you must adjust the supply voltage based on the altitude:

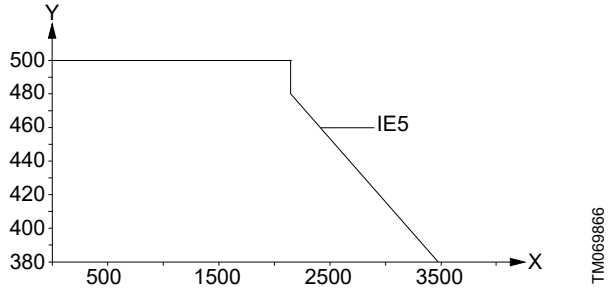

Supply voltage for three-phase motor in relation to altitude

Pos.	Description
X	Altitude [m]
Y	Supply voltage [V]

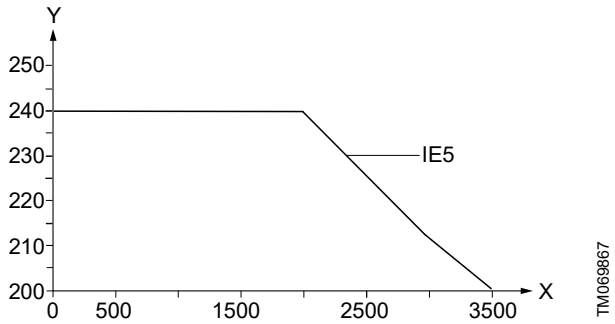

Supply voltage for single-phase motor in relation to altitude

Pos.	Description
X	Altitude [m]
Y	Supply voltage [V]

13.1.2 Temperature

Ambient temperature

- During storage and transportation: see the installation and operating instructions of the pump
- During operation: 0-40 °C

Liquid temperature

- 5-60 °C

13.1.3 Humidity

Maximum 95 %.

13.1.4 Maximum operating pressure

See system nameplate.

13.1.5 Minimum inlet pressure

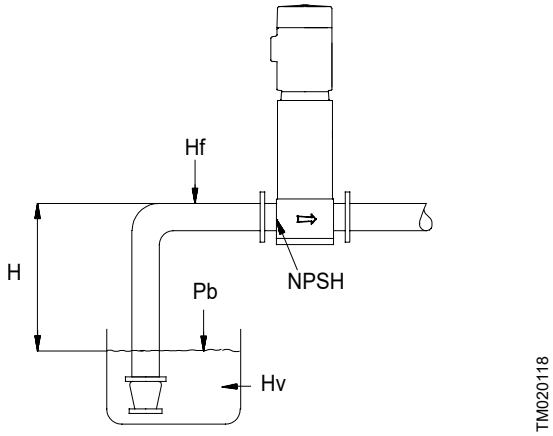

Parameters for the calculation of minimum inlet pressure

The minimum inlet pressure "H" in meters of head required to avoid cavitation in the pumps can be calculated as follows.

H	pb × 10.2 - NPSH - Hf - Hv - Hs
pb	Barometric pressure in bar. Barometric pressure can be set to 1 bar. In closed systems, p_b indicates the system pressure in bar.
NPSH	Net Positive Suction Head in meters of head The NPSH value can be read from the NPSH curve at the highest flow which the individual pump delivers.
Hf	Friction loss in the inlet manifold in meters of head at the highest flow which the individual pump delivers. **Note:** If a non-return valve is installed on the inlet side of the pump, the friction loss in the valve must be added. See the manufacturer's data.
Hv	Vapor pressure in meters of head
Hs	Safety margin of min. 0.5 meters of head

See Grundfos Product Center for more information.

In some regions, the system can be equipped with a low inlet manifold, which makes it more suitable for suction lift operation. Contact Grundfos for further information.

Non-return valve on the inlet side

For suction-lift operation, the non-return valve must be moved to the inlet side. This is often used in combination with a foot valve if the system is drawing water from a tank.

Example

pb	1 bar
Pump type	CRE 15, 50 Hz
Flow rate	15 m^3/h
NPSH	1.2 meters of head
Hf	3 meters of head
Liquid temperature	+60 °C
Hv	2.1 meters of head
H	pb × 10.2 - NPSH - Hf - Hv - Hs [meters of head]
H	1 × 10.2 - 1.2 - 3.0 - 2.1 - 0.5 = 3.4 meters of head

This means that each pump can operate with a maximum suction lift of 3.4 meters of head.

Pressure calculated in bar: 3.4 × 0.0981 = 0.33.

Pressure calculated in kPa: 3.4 × 9.81 = 33.4.

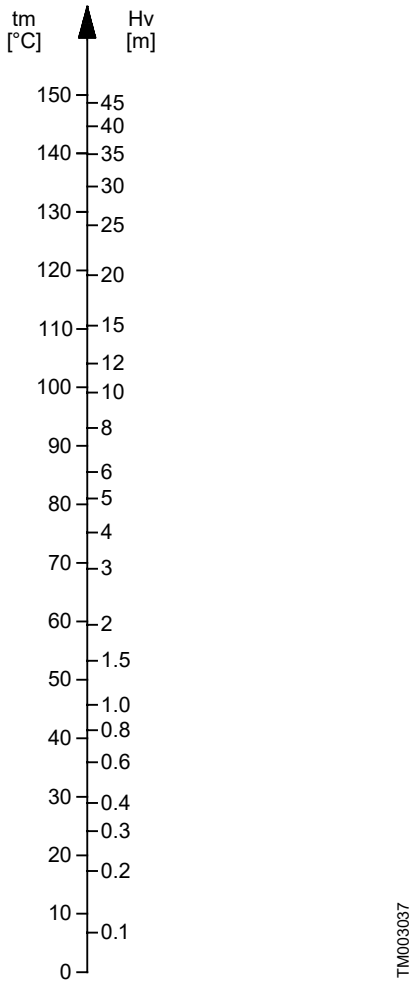

Vapor pressure

13.1.6 Maximum inlet pressure

There is no maximum inlet pressure for CME pumps.

The total of the actual inlet pressure and the pressure at which the pump is operating against a closed valve must always be lower than the maximum system pressure.

13.1.7 Minimum flow rate

Due to the risk of overheating, do not use the pumps at flow rates below 10 % of the rated flow rate of one pump.

The pumps must not run against a closed outlet valve.

13.1.8 Maximum starts and stops

Limit the system starts and stops via the power supply to 4 times per hour.

When the system is switched on via the power supply, it will start after approximately 5 seconds.

For more frequent starts and stops, use the external start-stop input.

When started via an external on/off switch, the system starts immediately.

13.1.9 Diaphragm tank

Set the diaphragm tank precharge pressure to 0.7 times the setpoint. Adjust the precharge pressure if the setpoint changes to ensure optimal operation.

Measure the precharge pressure while the system is pressureless.

We recommend that you use nitrogen gas for precharging.

13.2 Supply voltage

Check that the supply voltage and frequency correspond to the values stated on the nameplate.

You can use both standard and quick-blow or slow-blow fuses.

System with single-phase pumps

3 × 380-415 V ± 10 %, 50/60 Hz, N, PE.

Recommended fuse size

Motor size [kW]	Min. [A]	Max. [A]
0.37 - 0.75	6	10
1.1 - 1.5	10	16

System with three-phase pumps

3 × 380-480 V ± 10 %, 50/60 Hz, PE.

Recommended fuse size

Motor size [kW]	Min. [A]	Max. [A]
0.37 - 1.1	6	6
1.5	6	10
2.2	6	16
3	10	16
4	13	16
5.5	16	32
7.5	20	32
11	32	32

13.3 Leakage current

Motor size [kW]	Number of pumps in system	Leakage current [mA]
0.37 - 11 (supply voltage ≤ 400 V)	2	< 7
	3	< 10.5
	4	< 14
0.37 - 11 (supply voltage > 400 V)	2	< 10
	3	< 15
	4	< 20

The leakage currents are measured in accordance with EN 61800-5-1:2007.

13.4 Sound pressure level

The sound pressure depends on the specific pump type and motor size. You can find the sound pressure level in the installation and operating instructions of the pump.

In systems with multiple pumps, the maximum total sound pressure $L_{p,tot}$ increases proportionally with the total number of pumps. You can calculate the value using the equation stated below.

Multiple sound sources may generally be added as[6)]

$$L_{p,tot} = 10Log_{10}\sum_{i} 10^{\frac{L_{p,i}}{10}}$$

This means that for a system with multiple identical pumps N, the total system sound level $L_{p,tot}$ may be calculated by adding the values below to the sound level of the specific pump type.

$$L_{p,tot} = L_p + \Delta L_p$$

Number of pumps N	ΔL_p dB(A)
1	0
2	3
3	5
4	6
5	7
6	8

13.5 Other technical data

EMC (electromagnetic compatibility)

According to EN 61000-6-2:2005 and 61000-6-3:2007.

Residential areas, unlimited distribution, corresponding to CISPR 11, class B, group 1.

Industrial areas, unlimited distribution, corresponding to CISPR 11, class A, group 1.

See the installation and operating instructions of the pump.

Enclosure class

IP54.

Insulation class

F (IEC 85).

13.5.1 Torques

Torques for terminals

Terminal	Recommended torque [Nm]
L1, L2, L3	2.2
PE	6
NC, C1, C2, NO	0.5
DI1, DI2, DI3, DI4, AI1, AI2, AI3, AO1, PT1, PT2, LT1, LT2, GND, 24V, 5V, TX, RX, A, Y, B, S24, ST1, ST2	0.5

Torques for other parts

Part designation	Recommended torque [Nm]
Control box, upper part	6.5 - 7
Cover for mains	1.0 - 1.3
Cable glands:	
M20/M40	1 - 1.5
Blind plugs:	
M20	1 - 1.5
½" NPT	8 - 10

6) Leo Beranek and Istvan L. Ver, *Noise and Vibration Control Engineering*, John Wiley and Sons, 1992

13.6 Factory settings

●	Function is enabled.
❍	Function is disabled.
-	Function is not available.

Settings	
Setpoint	30 % of sensor range
Operating mode	**Normal**
Control mode	**Constant pressure**
Pipe filling function	❍
Buttons on product	●
Stop function (Low-flow stop function)	●
Controller (Controller settings)	●
Ti	0.5
Kp	0.5
Operating range	25-100 %
Ramps	
Ramp-up	1 second
Ramp-down	3 seconds
Number (Pump number)	-
Radio communication	●
Analog input 1	**4-20 mA**
Analog input 2	❍
Analog input 3	❍ [7]
Pt100/1000 input 1	❍
Pt100/1000 input 2	❍
Digital input 1	**External stop**
Digital input 2	❍
Digital input/output 3	**Dry running** [8]
Digital input/output 4	❍
Pulse flowmeter	❍
Predefined setpoints	❍
Analog output	❍
External setpoint function	❍
Signal relay 1	**Ready**
Signal relay 2	**Running**
Limit 1 exceeded	❍
Limit 2 exceeded	❍
LiqTec function	❍
Standstill heating	❍
Motor bearing monitoring	●
Pump name	Hydro Multi-E

7) Active if the inlet sensor is factory-fitted.

8) Not active if the inlet sensor is factory-fitted.

14. Product manuals

You can find further product information about the system in the following documents. The documents are available in Grundfos Product Center on www.grundfos.com.

Title	Document type	QR code	Publication number
CR, CRI, CRN	Installation and operating instructions		96462123
CM	Installation and operating instructions		95121197
CRE, CRIE, CRNE, SPKE, MTRE, MTHE, CME, BMS MGE Model J, K	Installation and operating instructions		92898118
CRE, CRIE, CRNE, SPKE, MTRE, MTHE, CME MGE 0.37 - 11 kW	Installation and operating instructions		98358864

15. Disposal

15.1 Precautions for disposal

DANGER
Electric shock
Death or serious personal injury
- Before you dismantle the system, make sure that the power supply is disconnected and cannot be accidentally switched on.

WARNING
Crushing of feet
Death or serious personal injury
- Before you lift the system, make sure that the lifting equipment is capable of handling the load, as listed on the nameplate and packaging label.

WARNING
Hot surface
Death or serious personal injury
- Before you dismantle the system, make sure that the system cools down.

CAUTION
Overhead load
Minor or moderate personal injury
- When you dismantle the system, use safety equipment.

CAUTION
Sharp element
Minor or moderate personal injury
- When you dismantle the system, use safety gloves.

15.2 Disposing of the system

This system or its components must be disposed of in an environmentally sound way:

1. Use the public or private waste collection service.
2. If this is not possible, contact the nearest Grundfos company or service workshop.

16. Document quality feedback

To provide feedback about this document, scan the QR-code using your phone's camera or a QR code app.

Click here to submit your feedback

中文版本

目录

1. 基本信息 . . . 31
1.1 危险性声明 . . . 31
1.2 注释 . . . 31
1.3 卫生 . . . 31
1.4 目标人群 . . . 32

2. 系统介绍 . . . 32
2.1 系统说明 . . . 32
2.2 预期用途 . . . 32
2.3 应用 . . . 32
2.4 型号 . . . 33

3. 接收系统 . . . 35
3.1 运输系统 . . . 35
3.2 检验系统 . . . 35
3.3 供货范围 . . . 35
3.4 搬运和吊装产品 . . . 35

4. 安装要求 . . . 36
4.1 位置 . . . 36
4.2 网络接口和服务 . . . 36
4.3 电机冷却 . . . 36

5. 安装系统 . . . 37
5.1 机械安装 . . . 37
5.2 电气连接 . . . 37
5.3 功能模块 . . . 39
5.4 信号继电器 . . . 43
5.5 信号电缆 . . . 44
5.6 安装通信接口模块 . . . 44

6. 启动系统 . . . 45

7. 控制功能 . . . 46
7.1 Grundfos Eye . . . 46

8. 多泵功能 . . . 48

9. 设置系统 . . . 48
9.1 设置的优先级 . . . 49

10. 保护功能 . . . 50
10.1 干转保护 . . . 50

11. 维修系统 . . . 51
11.1 电机维护 . . . 51
11.2 终止系统运行 . . . 51
11.3 停机后启动系统 . . . 51

12. 故障查找 . . . 52
12.1 系统启动后不运行 . . . 52
12.2 系统启动后立即停止 . . . 52
12.3 系统停止且无法重新启动 . . . 52
12.4 系统供水不稳定 . . . 52
12.5 水泵运转但不供水 . . . 52
12.6 系统无法达到设定值 . . . 52
12.7 轴封泄漏 . . . 52
12.8 泵工作时有噪音 . . . 52
12.9 频繁启停 . . . 52

13. 技术参数 . . . 53
13.1 运行条件 . . . 53
13.2 电源电压 . . . 54
13.3 漏电电流 . . . 54
13.4 声压级别 . . . 55
13.5 其他技术数据 . . . 55
13.6 出厂设置 . . . 56

14. 产品手册 . . . 56

15. 报废处理 . . . 56
15.1 废弃处置注意事项 . . . 56
15.2 系统报废处理 . . . 56

16. 文档质量反馈 . . . 57

1. 基本信息

安装系统之前，请阅读本文档。安装和操作必须遵守当地规章制度并符合公认的操作规范。

1.1 危险性声明

以下符号和危险性声明可能出现在格兰富的安装和操作指导、安全说明和维修指导中。

危险
指示危险情况，如果不避免，将导致死亡或严重的人身伤害。

警告
指示危险情况，如果不避免，可能导致死亡或严重的人身伤害。

注意
指示危险情况，如果不避免，可能导致轻度或中度的人身伤害。

危险性声明的结构如下：

警示语
危险说明
无视警告的后果
- 避免危险的措施。

1.2 注释

以下符号和注释可能出现在格兰富的安装和操作指导、安全说明和维修指导中。

使用防爆产品时应遵循这些指导。

带白色图形符号的蓝色或灰色圆圈表示必须采取行动。

红色或灰色圆圈加一斜线，也可能带黑色图形符号，表示不得采取或必须停止的行为。

不遵守这些指导可能会造成设备故障或设备损坏。

使工作更轻松的窍门和建议。

1.3 卫生

格兰富系统经过功能测试，因此可能会残留少量的水。 受污染的饮用水会危害健康，因此在使用系统之前必须彻底清洗或冲洗系统。同样地，如果系统长时间未使用，也需要进行清洗或冲洗。

冲洗和清洗系统时必须始终遵守当地规定和操作惯例。

1.4 目标人群

此安装与操作说明主要面向专业安装人员和产品操作人员。
我们建议由技术资质符合相关法规要求的熟练人员进行安装。

2. 系统介绍

2.1 系统说明

此系统不仅内置格兰富 CRE、CRIE、CME-A 或 CME-I 泵，同时还配置有一体式变频控制单相或三相 MGE 电机及断路器柜。

系统可通过切入或切出所需数量的水泵并对运行中的水泵进行并联控制来调节自身性能，使其满足工作需要。

2.2 预期用途

Hydro Multi-E 是一套出厂即组装完成、可随时安装和操作的系统。

该系统可通过连续动态调节当前所连水泵的转速来维持恒定压力。

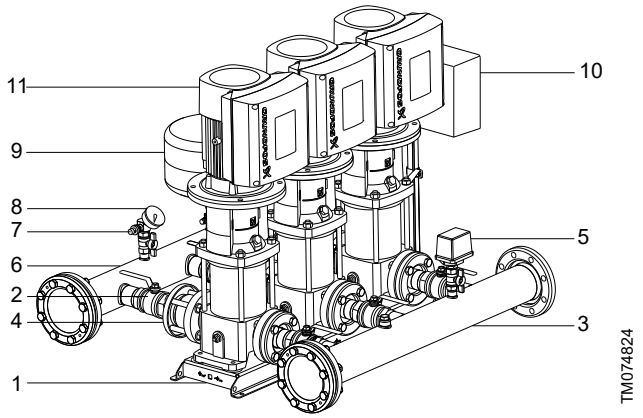

带 CRE、CRIE 泵的系统

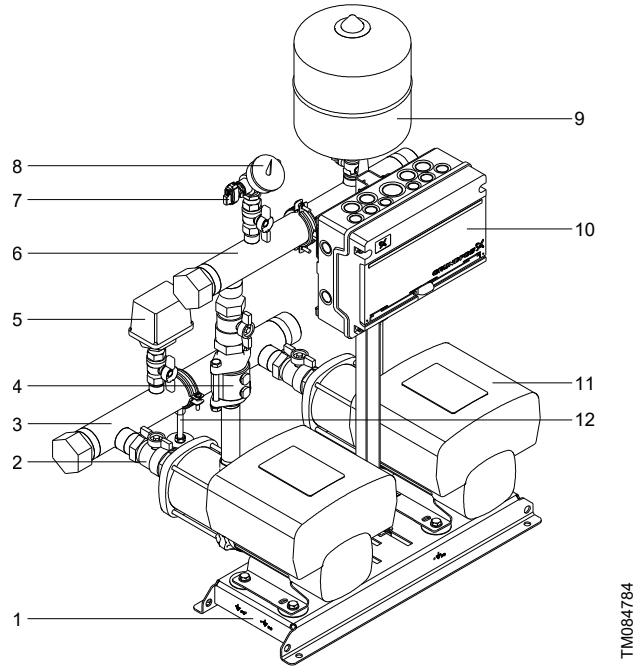

带 CME 泵的系统

位置	说明
1	底座
2	隔离阀
3	进水总管
4	止回阀
5	压力开关
6	排水总管
7	出口压力传感器
8	压力表
9	隔膜水箱
10	断路器柜
11	泵
12	支脚

断路器柜内置主开关和断路器。

2.3 应用

此系统主要用于洁净水增压，适用区域包括：

- 酒店
- 医院
- 学校
- 办公大楼
- 工业区
- 灌溉区
- 清洗区
- 公寓楼
- 公寓楼群。

2.4 型号

2.4.1 铭牌

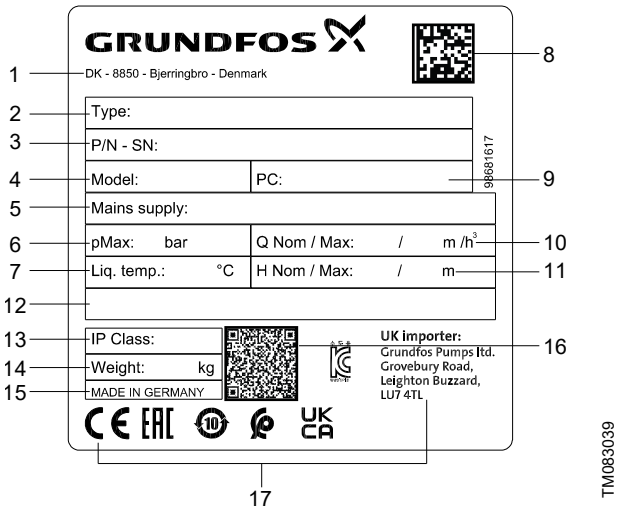

铭牌示例

位置	说明
1	公司地址
2	系统类型
3	系统编号和序列号
4	系统型号
5	主电源
6	最大工作压力
7	液体温度
8	数据矩阵应用标识符
9	生产代码
10	标称流量和最大流量
11	标称扬程和最大扬程
12	技术文档
13	IP 等级
14	重量
15	原产国
16	二维码
17	认证标记

2.4.2 型号说明

示例： **Hydro Multi-E 2 CRE 15-3 U7 A-A-A-A-ABC**

代码	说明		名称
Hydro Multi			系统名称
-E	E：所有泵带 E 电机		系统类型
2			主泵数量
CRE 15-3			泵类型
U7	U1： 3 × 380-415 V，N，PE，50/60 Hz U2： 3 × 380-415 V，PE，50/60 Hz U7：1 × 200-240 V，PE，50/60 Hz U8：1 × 200-240 V，N，PE，50/60 Hz UJ：1 × 208-230 V，PE，60Hz UK：3 × 208-230 V，PE，60Hz UL：3 × 460-480 V，PE，60Hz UX：定制型号（特殊额定电压）		电压代码
A-	A：安装有电气箱（右侧）的系统 B：带壁挂式电气箱和 5 m 电缆的系统 C：安装有电气箱（左侧）的系统 O：其他控制面板 X：定制型号		设计
A-	A：E		启动方式
A-	A：不锈钢总管和底座，配置标准阀门 B：不锈钢总管、底座和阀门 C：镀锌钢总管和底座，配置标准阀门（适用于 CME-A 泵 ） G：镀锌钢总管和底座，配置标准阀门（适用于 CRIE、CME-I 泵 ） H： 黑色喷漆碳钢总管和底座，配置标准阀门 I： 不锈钢总管、黑色喷漆底座，配置标准阀门 J： 黑色喷漆低碳钢总管和底座，配置标准阀门 P： 不锈钢总管、镀锌钢底座，配置标准阀门 X： 定制材料组合		材料组合
A-	A：国际系列 B：英国系列 C：印度系列 E：意大利系列 F：法国系列 G：中国系列 H：韩国系列	I：APAC 系列 J：澳大利亚系列 K： 巴西系列 N：荷兰系列 P：波兰系列 U：美国系列 Z：阿联酋系列	产品系列
ABC	A：标准水力 C：每台泵均配置出口传感器 D：干转保护传感器 E：无干转保护 F：用于干转保护的液位开关 G：附带 CIM 模块 K：无入口总管	L：止回阀位于入口侧 M：入口侧压力表 O：PN 25 压力等级 S：定制型号 T：证书 U：小规格电机 X：三个以上选项	选配

2.4.3 识别操作面板

您可以采用下列方式之一识别操作面板：

Grundfos GO

您可以在**状态**下的**已安装模块**菜单中识别操作面板。

电机显示屏

对于配备 HMI 300 或 301 操作面板的电机，您可以在**状态**下的**已安装模块**菜单中识别操作面板。

电机铭牌

您可以根据电机铭牌上的数据来识别操作面板。

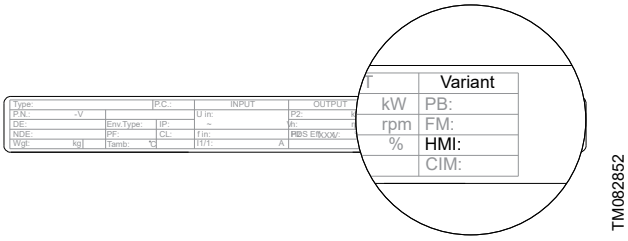

操作面板型号：

- HMI 200
- HMI 201 [1)]
- HMI 300
- HMI 301 [1)]。

1) 适用于不带无线电模块的电机。

2.4.4 功能模块的识别

您可以采用以下任一方式识别当前安装的模块：

Grundfos GO

您可以在**状态**下的**已安装模块**菜单中识别功能模块。

电机显示屏

对于配备 HMI 300 或 301 操作面板的电机，您可以在**状态**下的**已安装模块**菜单中识别功能模块。

电机铭牌

您可以通过电机铭牌上的数据来识别当前安装的模块。

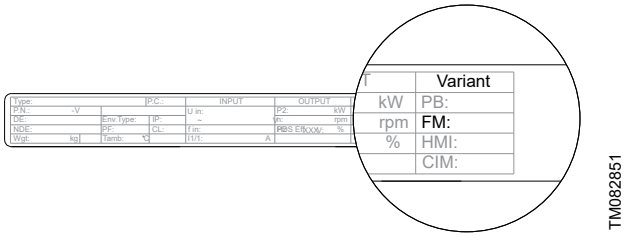

功能模块型号：

- FM300
- FM310
- FM311 [2)]。

2) 无蓝牙 (BLE)。

3. 接收系统

3.1 运输系统

系统交付时会置于木箱笼或密闭木箱内，或者包裹在叉车或类似车辆专用的托盘或纸板箱内，具体情况由系统尺寸决定。

3.2 检验系统

收到系统后，确保交付货品与订单相符，部件齐全，并且包装完好无损。

3.3 供货范围

包装盒中包含以下物件：

- 1 台 Hydro Multi-E 系统
- 系统的安装和操作说明
- 泵的安装和操作说明
- 系统快速指南
- 断路器柜接线图。

3.4 搬运和吊装产品

如果泵的重量过高，那么只能吊装安装有总管的系统，以防止底座弯曲。

危险
高空起吊
死亡或重度人身伤害
- 请勿使用电机的吊环螺栓吊装系统。
- 请勿通过总管吊起系统。

危险
坠落危险
死亡或重度人身伤害
- 请勿站在总管上。

警告
高空起吊
死亡或重度人身伤害
- 请勿站立在吊装货物的下方或附近。
- 吊装或搬运系统时请遵守当地法规。

警告
可能压伤脚
死亡或重度人身伤害
- 吊起系统前，请务必查看铭牌及包装标签确保起重设备能够搬运系统。

小心
高空起吊
轻度或中度人身伤害
- 放置系统时，请使用合适的起重设备。

吊装系统时，吊装点必须始终位于重心上方以使系统保持稳定。

如果系统机架由弯曲钢板制成，那么可使用机架上的孔进行吊装。

- 请使用经认证的、适合负载的起重装置。 每根吊带的长度必须至少为 3 m。放置吊带时确保系统垂直受力。
- 如果泵上没有吊环螺栓或支架，请将安全吊带缠绕在泵头上数圈。
- 将安全吊带系紧。
- 对于机架采用弯曲钢板制成的系统，请使用安装在孔中的钩环吊装系统。

如果使用运输吊带固定系统，那么在系统安装完毕之前请勿移除运输吊带。

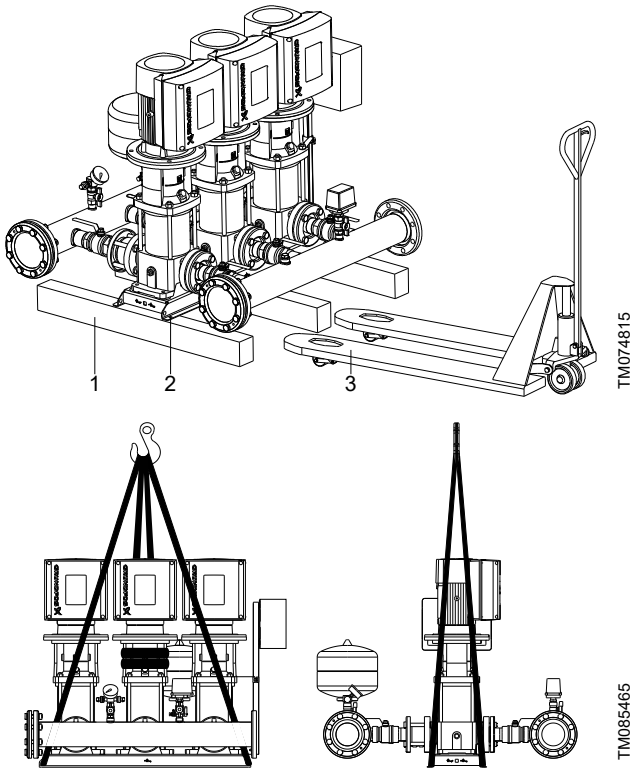

吊装配置弯曲钢板机架的系统

位置	说明
1	木梁（含）
2	木螺钉（含）
3	叉车

4. 安装要求

4.1 位置

此系统只能安装在室内，并且不得直接暴露在阳光下。

- 请将系统安装在通风良好的房间，以确保控制面板和水泵充分冷却。
- 为了方便检验和拆卸，系统在各个方向上都必须保留一米间隙。

此系统只能连接到有严格访问控制机制的受保护网络子网。

此系统必须安装在有门禁控制的区域内，以防止非授权人员操作此系统。

相关信息

4.3 电机冷却

4.2 网络接口和服务

此系统出厂时默认配置有以下外置网络接口：

接口	说明
RJ45	有线以太网连接

此系统出厂时默认通过网络接口实现以下服务：

接口	可实现的通信服务	说明
RJ45	GENIpro TCP	该接口用于将产品连接到工程工作站的服务工具。 开始通信前需要先完成配对。 GENIpro TCP 一旦配对即处于永久配对状态。

4.3 电机冷却

请遵守以下事项，以确保电机和电子设备得到充分冷却。

- 安装电机时，确保风扇盖末端与墙壁或其他固定物体之间的距离至少为 50 mm（2 英寸）。
- 确保环境温度不会超过 40°C。
- 保持散热片和风扇叶片清洁。

5. 安装系统

警告
挤压危险
死亡或重度人身伤害
- 移动或者吊起系统或部件时，请使用专业的安装工具。
- 安装底座时，请佩戴防护装备。
- 安装减震器时，请使用附送的木梁支撑系统。
- 只有经过培训的人员才可以执行安装操作。

小心
高空起吊
轻度或中度人身伤害
- 放置系统时，请使用合适的起重设备。

小心
可能压伤脚
轻度或中度人身伤害
- 安装管道和水箱时，请佩戴防护装备。

小心
尖锐物品
轻度或中度人身伤害
- 佩戴防护手套。

5.1 机械安装

5.1.1 基座

将系统放置在平坦、坚固的表面，例如混凝土地面或基座。如果系统未配置减振器，请使用螺栓将其固定在地面或基座上。

5.1.2 管道

水泵底座上的箭头用于指示流经水泵的水流方向。

连接至系统的管道必须尺寸适当。在进水管和出水管上分别安装膨胀接头以免引发共振。

1. 将管道连接至系统的总管。
   总管一端安装有螺帽。若要使用这一端，请先拧下螺帽，再对总管的另一端涂抹密封剂，然后装上螺帽。在带法兰的总管上安装一个带垫圈的盲法兰。
2. 在启动水泵之前，将所有螺钉和螺栓拧紧。
   如果系统安装在公寓式建筑群中或者管道上的首位用户位置距离系统很近，建议在进水管和出水管的接合处安装膨胀接头，以防止振动通过管道传递。
3. 将管道固定到建筑物上，以确保管路不会发生移动或扭曲。

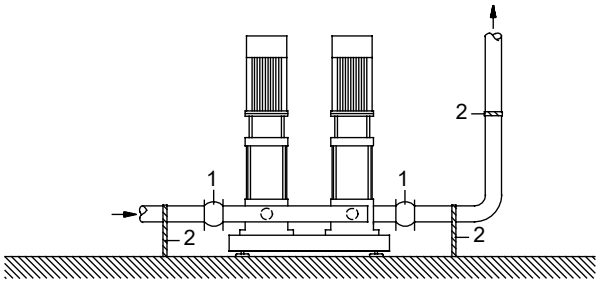

膨胀接头和管道支架的安装示例

位置	说明
1	膨胀接头
2	管道支架（以及推荐的隔离阀位置）

上图所示的膨胀接头和管道支架不包含在标准系统内。

5.1.3 排水孔

在电机驱动端有带插塞的排水孔。您可以将法兰向两侧旋转 90°或 180°。

当排水孔打开时，电机会启动自排，由此排出水和湿气。

打开排水孔时，电机的防护等级将低于标准等级。

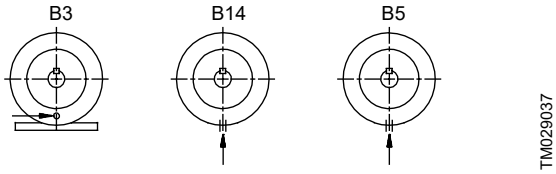

5.2 电气连接

危险
触电
死亡或重度人身伤害
- 断开电源连接并确保电源不会意外接通。
- 确保连接至连接组的接线沿整个长度方向全部采用加强绝缘层相互分隔。

警告
触电
死亡或重度人身伤害
- 所有电气连接操作必须由具备相关资质的人员按照当地规定执行。

检查电源电压及频率是否与铭牌上列出的数值一致。

如果电源电缆出现损坏，必须由制造商、厂制造商服务伙伴或具备类似资质的人员进行更换。

用户或安装人员负责根据当地规定正确安装接地保护装置。

采用永久连接方式将系统安装并固定到位。此外，系统与电源之间也应采用永久连接方式。

使用双重导线接地。

如果电源断开装置所在区域高于 EN60204-1 第 5.3.4 段中指定维修水平面至少 0.6 米并因此无法安装系统，则必须根据 EN60204-1 第 5.3.2 段要求安装外部电源断开装置。系统必须配备有可将其锁定在 OFF(隔离)位置的装置。

5.2.1 供电系统

危险
触电
死亡或重度人身伤害
- 将系统连接到接地保护端，并按照当地规定为间接接触位置提供保护。

保护性接地导线必须始终带有黄色和绿色 (PE) 或黄色、绿色、蓝色 (PEN) 标记。
检查电源电压及频率是否与铭牌上列出的数值一致。

如果您想通过 IT 网络为系统供电，请确保您的系统型号适当。如有疑问，请联系格兰富公司。
内部 EMC 滤波器保持连接状态，因此没有可供选择的降低漏电电流型号。

断路器柜中的接线必须尽可能短。 但独立的接地导线例外。其长度必须足以保证在电缆意外从电缆入口拉出时，接地导线最后断开连接。
有关最大备用保险丝规格，请参见章节“供电电压”。

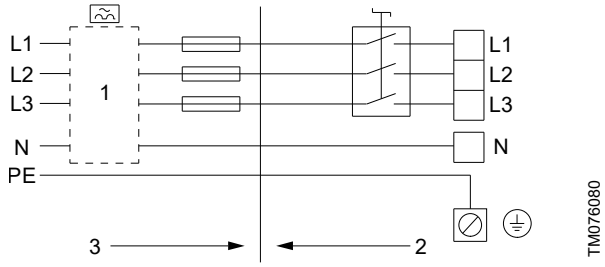

连接电源并且带备用保险丝和附加保护装置的系统示例（仅适用于配置有单相电机的系统）

位置	说明
1	ELCB (GFCI)
2	断路器柜
3	安装在建筑物内

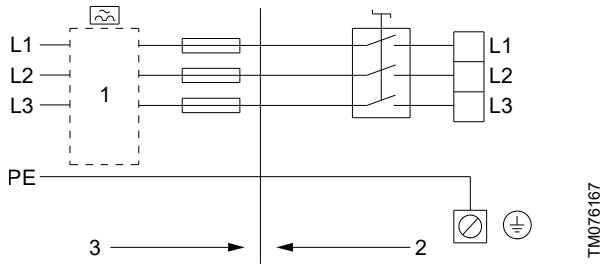

连接电源并且带备用保险丝和附加保护装置的系统示例（仅适用于配置有三相电机的系统）

位置	说明
1	ELCB (GFCI)
2	断路器柜
3	安装在建筑物内

相关信息
13.2 电源电压

5.2.2 电机保护

所有型号（包括 H 和 I）：电机内置热防护装置，可避免慢速过载与阻塞引发过热。无需外部电机防护。
J 型：该产品具有电机超速保护和过载保护功能。
K 型：此产品具有电机超速保护和过载保护功能，以及热记忆保护功能。
此外，产品还具有电源瞬变电压保护特性，符合 EN61800-3 标准。

5.2.3 绝缘电阻

请勿使用高电压兆欧表来测量电机绕组的绝缘电阻或集成变频器的电机的绝缘电阻，否则可能会损坏内置电子元件。

5.2.4 附加保护

配置单相电机的系统
如果将系统连接至使用漏电断路器（ELCB）或接地故障断流器（GFCI）作为附加保护的电气装置，那么该断路器或断流器必须标有以下符号：

	ELCB (GFCI)	RDC A 型

当选择接地漏电断路器或接地故障电路断流器时，必须考虑所有电气设备的漏电电流总和。

有关系统漏电电流的信息，请参见“漏电电流”章节。

配置三相电机的系统
如果将系统连接至使用漏电断路器（ELCB）或漏电保护断路器（GFCI）作为附加保护的电气装置，那么该断路器或断流器必须具备以下功能：
- 必须适合处理漏电电流与干扰脉冲状漏电电流。
- 当交替出现交流故障电流和直流故障电流时，比如交替出现脉冲直流故障电流和稳定直流故障电流时，断路器或断流器必须跳闸。

对此类系统，必须使用 B 型接地漏电断路器或接地故障电路断流器。
此断路器或断流器必须标有以下符号：

		ELCB (GFCI)	RDC B 型

有关系统漏电电流的信息，请参见“漏电电流”章节。

防止相位失衡
最大限度减少电源的相位失衡。
三相电机必须连接至符合 IEC 60146-1-1 C 级质量要求的电源。这样可保证组件的使用寿命。

相关信息
13.3 漏电电流

5.3 功能模块

功能模块是指为方便用户连接不同类型的传感器，如开关和继电器，而配置不同类型输入输出端子的附加板。

目前此系统只能配置有一个功能模块。

以下是可供选用的功能模块：

- FM300
- FM310
- FM311 3)。

3) 无蓝牙 (BLE)。

模块的选择取决于具体应用和所需的输入和输出数量。

电缆连接

信号电缆和总线连接电缆的屏蔽层必须通过其中一个地线夹(H)连接至地面。

请参见有关信号电缆和总线连接电缆的章节。

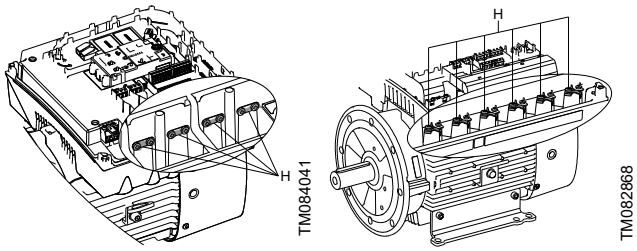

J 型　　*K 型*

相关信息

2.4.4 功能模块的识别

5.5 信号电缆

5.3.1 功能模块，FM300

输入和输出

模块配置有以下接口：

- 三个模拟输入
- 一个模拟输出
- 两个专用数字输入
- 两个可配置数字输入或开路集电极输出
- 格兰富数字传感器输入和输出
- 两个 Pt100/1000 输入
- 两个 LiqTec 传感器输入
- 两个信号继电器输出
- GENIbus 连接。

信号继电器 1

LIVE：您可以将最高 250 VAC 的电源电压连接到输出。

PELV:输出与其他电路电流分离。因此，您可以根据需要将电源电压或保护性超低电压连接到输出上。

信号继电器 2

PELV:输出与其他电路电流分离。因此，可根据需要将电源电压或保护性超低电压连接到输出端上。

输入和输出连接端子

危险
触电
死亡或重度人身伤害
- 确保连接到以下继电器的接线全部通过加强绝缘层相互分隔。

输入和输出均通过加强绝缘层以及与其他电路绝缘实现与工频电源部件的内部隔离。所有控制端子均具有超低压保护（PELV）功能，可防止发生触电事故。

继电器电缆必须采用双绝缘层或加强绝缘层，且额定电压至少为 250V/2A。

以太网电缆必须至少为带屏蔽层的 Cat5e/Cat6 网线。

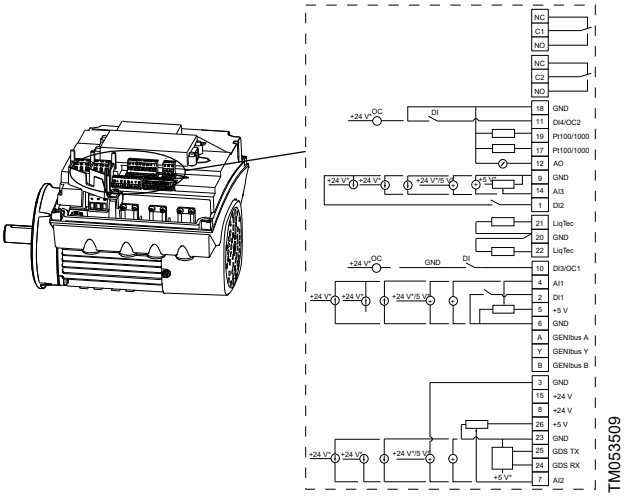

*如果使用外部电源，必须将其连接至 GND。

端子	类型	功能
NC	常闭触点	信号继电器 1： LIVE 或 PELV
C1	共用	
NO	常开触点	
NC	常闭触点	信号继电器 2： 仅 PELV
C2	共用	
NO	常开触点	
18	GND	信号接地
11	DI4/OC2	数字输入/输出，可配置 开路集电极：最大 24 V，电阻式或电感式
19	Pt100/1000 输入 2	Pt100/1000 传感器输入
17	Pt100/1000 输入 1	Pt100/1000 传感器输入
12	AO	模拟输出： • 0-20 mA 或 4-20 mA • 0-10 V。
9	GND	信号接地
14	AI3	模拟输入： • 0-20 mA 或 4-20 mA • 0-10 V
1	DI2	数字输入，可配置
21	LiqTec 传感器输入 1	LiqTec 传感器输入 （白色导线）
20	GND	信号接地 （棕色和黑色导线）
22	LiqTec 传感器输入 2	LiqTec 传感器输入 （蓝色导线）
10	DI3/OC1	数字输入/输出，可配置 开路集电极：最大 24 V，电阻式或电感式。
4	AI1	模拟输入： • 0-20 mA 或 4-20 mA • 0.5 - 3.5 V，0-5 V 或 0-10 V。
2	DI1	数字输入，可配置 数字输入 1 出厂时设置为启动/停止输入，出现开路时会促发停止。端子 2 和 6 之间在出厂时装有跳线。要将数字输入 1 用于实现外部启动/停止或其它外部功能，请拆除跳线。

端子	类型	功能
5	+5 V	电位计和传感器供电
6	GND	信号接地
A	GENIbus，A	GENIbus, A (+)
Y	GENIbus，Y	GENIbus, GND
B	GENIbus，B	GENIbus，B (-)
3	GND	信号接地
15	+24 V	电源
8	+24 V	电源
26	+5 V	电位计和传感器供电
23	GND	信号接地
25	GDS TX	格兰富数字传感器输出
24	GDS RX	格兰富数字传感器输入
7	AI2	模拟输入： • 0-20 mA 或 4-20 mA • 0.5 - 3.5 V，0-5 V 或 0-10 V。

5.3.2 功能模块，FM310 和 FM311

输入和输出

FM 311 功能模块不带蓝牙连接功能。

模块配置有以下接口：

- 三个模拟输入
- 一个模拟输出
- 两个专用数字输入
- 两个可配置数字输入或开路集电极输出
- 格兰富数字传感器输入和输出
- 两个 Pt100/1000 输入
- 两个 LiqTec 传感器输入
- 两个信号继电器输出
- GENIbus/Modbus 连接
- 两个安全扭矩关闭 (STO) 输入
- 以太网连接
- 蓝牙(BLE)连接[4)]。

4) FM311 不带蓝牙功能。

信号继电器 1

LIVE：您可以将最高 250 VAC 的电源电压连接到输出。

SELV：输出与其他电路电流分离。因此，您可以根据需要将电源电压或保护性超低电压连接到输出上。

信号继电器 2

SELV：输出与其他电路电流分离。因此，您可以根据需要将电源电压或保护性超低电压连接到输出上。

输入和输出连接端子

危险
触电
死亡或重度人身伤害
- 确保连接到以下继电器的接线全部通过加强绝缘层相互分隔。

数字输入 1 出厂时设置为启动/停止输入，当出现开路时会促发停止。端子 2 和 6 之间在出厂时装有跳线。如果要将数字输入 1 用于实现外部启动/停止或其它外部功能时，请拆除跳线。

输入和输出均通过加强绝缘层以及与其他电路绝缘实现与工频电源部件的内部隔离。所有控制端子均附带安全超低电压 (SELV) 电路，由此可防止触电。

继电器电缆必须采用双层绝缘或加强绝缘，且额定电压至少为 250 V/2 A。

以太网电缆必须至少为带屏蔽层的 Cat5e/Cat6 网线。

FM310 和 FM311 功能模块上的报警继电器(NC/C1/NO)的 250 V 触点不得直接连接至主电源，而应使用单独的电源或经电气隔离的变压器供电。

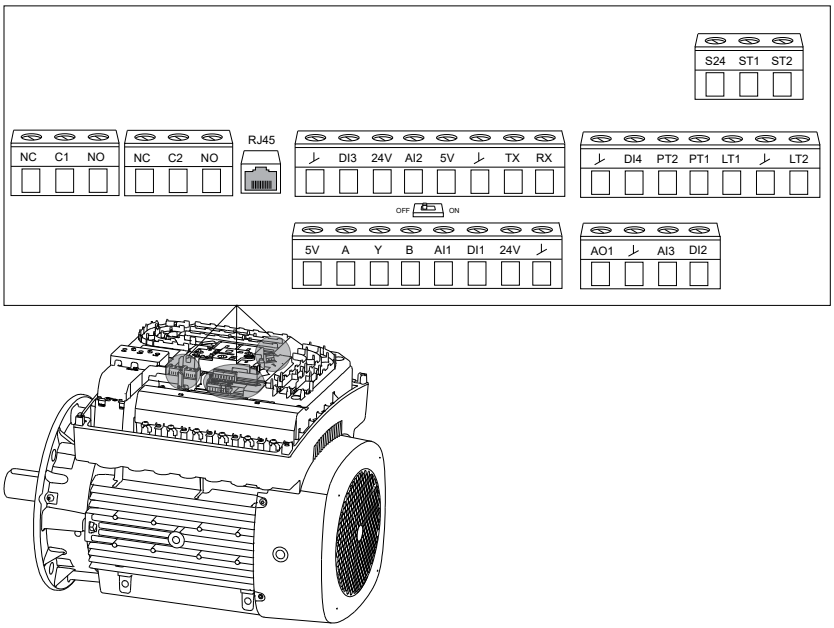

TM082862

端子	类型	功能
NC	常闭触点	信号继电器 1： LIVE 或 SELV
C1	共用	
NO	常开触点	
NC	常闭触点	信号继电器 2： 仅 SELV
C2	共用	
NO	常开触点	
RJ45	以太网	以太网通信
GND	GND	信号接地
DI3	DI3/OC1	数字输入/输出，可配置 开路集电极：最大 24 V，电阻式或电感式。
24 V	+24 V	电源
AI2	AI2	模拟输入： • 0-20 mA 或 4-20 mA • 0.5 - 3.5 V，0-5 V 或 0-10 V。
5 V	+5 V	电位计或传感器的电源
GND	GND	信号接地
TX	GDS TX	格兰富数字传感器输出
RX	GDS RX	格兰富数字传感器输入
GND	GND	信号接地
DI4	DI4/OC2	数字输入/输出，可配置 开路集电极：最大 24 V，电阻式或电感式。
PT2	Pt100/1000 输入 2	Pt100/1000 传感器输入 2
PT1	Pt100/1000 输入 1	Pt100/1000 传感器输入 1
LT1	LiqTec 传感器输入 1	LiqTec 传感器输入 1 白色导线
GND	GND	信号接地 棕色和黑色导线
LT2	LiqTec 传感器输入 2	LiqTec 传感器输入 2 蓝色导线
5 V	+5 V	电位计或传感器的电源
A	GENIbus，A	GENIbus，A (+) / Modbus，D1 (+)
Y	GENIbus，Y	GENIbus，GND / Modbus，GND
B	GENIbus，B	GENIbus, B (-) / Modbus，D0 (-)

端子	类型	功能
AI1	AI1	模拟输入： • 0-20 mA 或 4-20 mA • 0.5 - 3.5 V，0-5 V 或 0-10 V。
DI1	DI1	数字输入，可配置 数字输入 1 在出厂时设置为启动/停止输入，出现开路时会促发停止。出厂时端子 DI1 与 GND 之间已安装跳线。要将数字输入 1 用于实现外部启动/停止或其它外部功能，请拆除跳线。
24 V	+24 V	电源
GND	GND	信号接地
AO1	AO	模拟输出： • 0-20 mA 或 4-20 mA • 0-10 V。
GND	GND	信号接地
AI3	AI3	模拟输入： • 0-20 mA 或 4-20 mA • 0.5 - 3.5 V，0-5 V 或 0-10 V。
DI2	DI2	数字输入，可配置
S24	+24 V (STO)	“安全扭矩关闭”输入的电源
ST1	STO1	安全扭矩关闭 - 输入 1
ST2	STO2	安全扭矩关闭 - 输入 2

5.4 信号继电器

电机通过两个内部继电器提供两个零电势信号输出。您可以将信号输出设置为**运行**、**泵运行**、**就绪**、**报警**和**警告**。
下表展示了两个信号继电器的功能。

Grundfos Eye 关闭
电源关闭。

运行	泵运行	就绪	报警	警告	运行模式
C NO NC	C NO NC	C NO NC	C NO NC	C NO NC	-

Grundfos Eye 呈绿色转动
泵在开环或闭环中以**正常**模式运行。

运行	泵运行	就绪	报警	警告	运行模式
C NO NC	C NO NC	C NO NC	C NO NC	C NO NC	**正常** **最小值** 或 **最大值**

Grundfos Eye 呈绿色转动
泵在**手册**模式下运行。

运行	泵运行	就绪	报警	警告	运行模式
C NO NC	C NO NC	C NO NC	C NO NC	C NO NC	**手册**

Grundfos Eye 呈绿色常亮
泵已做好运行准备，但尚未运行。

运行	泵运行	就绪	报警	警告	运行模式
C NO NC	C NO NC	C NO NC	C NO NC	C NO NC	**停止**

Grundfos Eye 呈黄色转动
触发警告，但泵仍在运行中。

运行	泵运行	就绪	报警	警告	运行模式
C NO NC	C NO NC	C NO NC	C NO NC	C NO NC	**正常** **最小值** 或 **最大值**

Grundfos Eye 呈黄色转动
触发警告，但泵仍在运行中。

运行	泵运行	就绪	报警	警告	运行模式
C NO NC	C NO NC	C NO NC	C NO NC	C NO NC	**手册**

Grundfos Eye 呈黄色常亮

触发警告，但泵已在**停止**命令作用下停止运行。

运行	泵运行	就绪	报警	警告	运行模式
C NO NC	C NO NC	C NO NC	C NO NC	C NO NC	停止

Grundfos Eye 呈红色转动

触发警报，但泵仍在运行。

运行	泵运行	就绪	报警	警告	运行模式
C NO NC	C NO NC	C NO NC	C NO NC	C NO NC	正常 最小值 或 最大值

Grundfos Eye 呈红色转动

触发警报，但泵仍在运行。

运行	泵运行	就绪	报警	警告	运行模式
C NO NC	C NO NC	C NO NC	C NO NC	C NO NC	手册

Grundfos Eye 呈红色闪烁

因触发警报而导致泵停止。

运行	泵运行	就绪	报警	警告	运行模式
C NO NC	C NO NC	C NO NC	C NO NC	C NO NC	停止

5.5 信号电缆

对于外部开/关转换、数字输入、设定值和传感器信号，需要使用截面积最小为 0.5 mm^2、最大为 1.5 mm^2 的屏蔽电缆。

电机接线盒内的电线必须尽可能短。

5.5.1 连接信号电缆

1. 将电缆的屏蔽层稳定地连接至框架的两端。确保屏蔽层尽可能靠近端子。

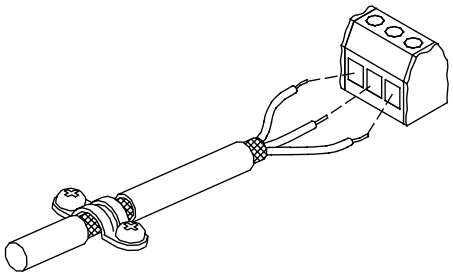

TM021325

2. 将信号电缆连接到端子。
3. 根据具体型号，拧紧一个或两个地线夹螺钉。
   无论是否接有电缆，都必须始终将框架接头的螺钉拧紧。

5.6 安装通信接口模块

务必将 CIM 模块安装在泵 1 中。如需冗余通信，可以在泵 2 中额外安装 CIM 模块。

当使用多个 CIM 模块时，请确保同时向两个 CIM 模块发送相同的命令，以避免 CIM 模块之间出现冲突。

参见泵的安装和操作说明中的安装信息。

5.6.1 通信接口模块和协议

以下是可用于此系统的通信接口模块。CIM 模块为选配设备，需要单独订购。

CIM	协议	零件号
CIM 110	LONWorks	96824798
CIM 150	PROFIBUS DP	96824793
CIM 200	Modbus RTU	96824796
CIM 290-MA	LPWAN GiC	92865300
CIM 300	BACnet MS/TP	96893770
CIM 500	PROFINET IO、Modbus TCP、Ethernet/IP、BACnet IP	98301408
CIM 550	以太网 GiC	92546689

6. 启动系统

危险
触电
死亡或重度人身伤害
- 在断路器柜或控制面板内进行任何连接之前必须先断开电源连接并至少等待五分钟。
- 启动系统之前，请确保电源断开连接并且不会意外接通。
- 拧紧电线连接。

危险
触电
死亡或重度人身伤害
- 将电机与接地保护端相连，然后根据当地规定采取安全措施防止间接接触。
- 在启动系统之前，确保没有短路。

警告
被污染的饮用水
死亡或重度人身伤害
- 启动系统之前，先根据当地法规对系统进行冲洗。

警告
高温
死亡或重度人身伤害
- 操作前，请确保系统能够承受铭牌上指定的负载。

小心
高温表面
轻度或中度人身伤害
- 确保溢出的高温液体不会对人员或设备造成损伤。
- 请勿触碰触液组件。

小心
高音量噪音
轻度或中度人身伤害
- 佩戴耳罩。

小心
尖锐物品
轻度或中度人身伤害
- 佩戴防护手套。

确保主开关和断路器已关闭。

在泵加满液体之前请勿启动泵。

配备 CME 泵的系统在启动和运行期间需要保证入口压力为正。因此，以下启动程序仅适用于配备 CRE 或 CRIE 泵的系统。

确保干转保护设备适用于入口无压力或入口压力低的应用。

完成“安装系统”章节中所述的机械和电气安装工作后，执行以下操作步骤：

1. 检查系统是否与订单一致，并且没有部件损坏。
2. 检查隔膜水箱中的预充压力是否为所需出口压力（设定值）的 0.7 倍。

   请在系统无压力时测量预充压力。

3. 将水源和电源连接到系统。
4. 打开所有泵的进水阀。
5. 关闭所有泵的出水阀，然后灌注所有水泵和进水管。

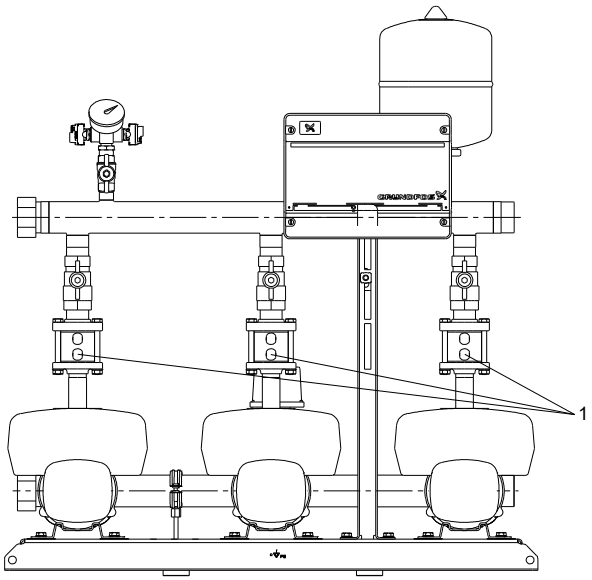

配备 CME 泵的系统中排气螺钉的位置

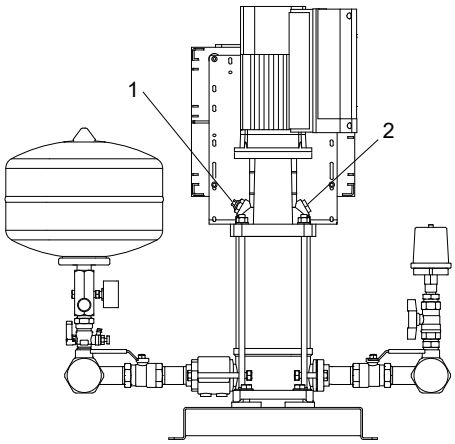

配备 CRE 泵的系统中排气螺钉及加注螺钉的位置

位置	说明
1	排气螺钉
2	加注螺钉

6. 打开主开关。
7. 按下水泵控制面板上的启动/停止按钮将泵 1 启动。
8. 利用排气螺钉对泵 1 进行排气。
9. 逐渐打开出水阀并保持低流量，直至所有截留空气从泵中排出为止。
10. 对系统中的其他泵重复执行第 7 步和第 9 步操作。
11. 设置所需的出口压力。

    若更改出口压力，请相应改变隔膜水箱的预充压力。

12. 检查泵当前的切入切出情况，并根据需求调整性能。

系统此时处于自动模式，可随时运行。利用 Grundfos GO 可更改标准设置，详情请参见“多泵功能”或“控制功能”章节。

相关信息

5. 安装系统
7. 控制功能
8. 多泵功能

7. 控制功能

警告
高温表面
死亡或重度人身伤害
- 只能触摸操作面板上的按钮。产品可能很热。

警告
触电
死亡或重度人身伤害
- 如果操作面板破裂或穿孔，请立即更换。联系就近的格兰富销售公司。

您可以通过以下用户界面更改设置：

- HMI 操作面板
- Grundfos GO
- Grundfos GO Link。

如果关闭电源，将会保存所有设置。
有关用户界面的控制功能，请参见泵的安装和操作说明。

7.1 Grundfos Eye

Grundfos Eye 是操作面板上的指示灯。其作用是指示电机的运行情况。

Grundfos Eye 指示灯 (A)

指示灯	指示	说明
	指示灯全部点亮。	**断电** 电机不运转。
	从非驱动端查看，两个相对的绿色指示灯会沿电机旋转的方向旋转。	**通电** 电机正在运行。
	两个相对的绿色指示灯常亮。	**通电** 电机不运转。
	从非驱动端查看，一个黄色指示灯沿电机旋转的方向旋转。	**警告** 触发警告，但电机仍在运行中。
	一个黄色指示灯常亮。	**警告** 电机已经停止。
	两个相对的红色指示灯同时闪烁。	**报警** 电机已经停止。
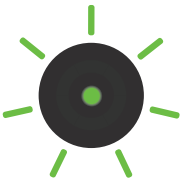	中间的绿色指示灯快速闪烁四次。	在 Grundfos GO 中按下电机名称旁边的 Grundfos Eye 符号时，Grundfos Eye 会闪烁四次。
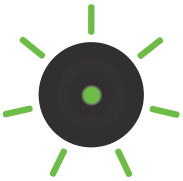	中间的绿色指示灯持续闪烁。	您已经在 Grundfos GO 中选择了电机，并且电机已做好连接准备。
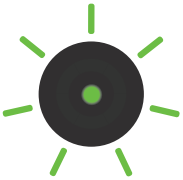	中间的绿色指示灯快速闪烁几秒钟。	电机由 Grundfos GO 控制或者与 Grundfos GO 交换数据。
	中间的绿色指示灯持续亮起。	电机连接至 Grundfos GO。

8. 多泵功能

配置有两个或多个出口压力传感器的系统

如果系统中的两台或多台泵都均置了出口压力传感器（标准选件），那么这些泵均可以作为主泵使用。通常，编号最小的泵为主泵。主泵在出厂时带有 1 号标记。

如果主泵 1 因触发报警而关闭或停止，那么其它主泵将自动接管系统的控制权。

9. 设置系统

您可以通过 Grundfos GO、Grundfos GO Link 或操作面板设置控制功能。 该系统出厂交付时处于恒压控制模式。该系统可在不同的控制模式下使用，其附加传感器可适应不同的控制模式。

- 如果仅提及一个功能名称，那么它既指 Grundfos GO，也指操作面板。
- 如果功能名称带括号，那么它指代操作面板上的功能。

功能	水泵可用的菜单或功能	系统可用的菜单或功能
控制模式		●
设定值		●
运行模式		●
设置手动速度	●	
设置用户自定义速度	●	
设置比例压力		●
模拟输入	●	
格兰富直接传感器	●	
Pt100/1000 输入	●	
数字输入	●	
数字输入/输出	●	
信号继电器（继电器输出）	●	
模拟输出	●	
运行范围	●	
外部设定值功能	●	●
预定义设定值		●
超出限值功能	●	●
LiqTec（LiqTec 功能）	●	
停机功能（低流量停止功能）		●
最小速度停机		●
管道加注功能		●
脉冲流量计（脉冲流量计设置）	●	●
变速	●	
转动方向	●	
停机时加热	●	
报警处理	●	
电机轴承监控	●	
维修时间间隔	●	
通信	●	
日期和时间（设置日期和时间）	●	
单位配置（单位）	●	
产品按键（启用/禁用设置）	●	
删除记录	●	
定义主页显示	●	
显示设置	●	
存储设置（存储实际设置）	●	
调用设置（调用已存储的设置）	●	
撤销	●	
水泵名称	●	
连接代码	●	
运行启动向导	●	
报警记录	●	●
警告记录	●	●
协助	●	
辅助泵设置	●	
多泵功能	●	●
辅助故障建议	●	●

有关设置系统的详细信息，请参见泵的安装和操作说明。

9.1 设置的优先级

您可以利用 Grundfos GO 将电机设置为以最大速度运行或停止运行。
如果同时激活两个或两个以上功能，电机会按照以优先级最高的设置运行。

如果已通过数字输入将电机设为最大速度，那么利用电机操作面板或 Grundfos GO 只能将电机设为**手动**或**停止**。
设置的优先级如下表所示。

优先级	启动/停止按钮	Grundfos GO 或操作面板	数字输入	总线通信
1	停止			
2		停止 [5]		
3		手动		
4		最高速度[5] / 用户定义的速度		
5			停止	
6			用户定义的速度	
7				停止
8				最高速度 / 用户定义的速度
9				最低速度
10				启动
11			最高速度	
12		最低速度		
13			最低速度	
14			启动	
15		启动		

5) 利用 Grundfos GO 或在电机操作面板上完成的**停止**和**最高速度**设置，会被总线发出的其他运行模式命令否决，例如**启动**。如果总线通信中断，电机会继续其之前的运行模式，例如通过 Grundfos GO 或电机操作面板选择的**停止**。

10. 保护功能

确保将用于实现保护功能的装置（例如通过数字输入检测到外部启动/停止）连接至所有配备出口压力传感器的泵上，并在泵上进行配置。

若使用附加传感器（例如可实现超出限值功能或者利用设定值影响系统的传感器），则该传感器也必须与配备出口压力传感器的所有泵相连。或者，也可以为配备出口压力传感器的各个泵额外安装一个传感器。

10.1 干转保护

系统必须具备干转保护功能。

干转保护类型：

- 出厂时进水总管上已安装压力开关或入口压力传感器。请参见“压力开关”和“入口压力传感器”章节。
- 液位开关安装在水箱（可选）内。请参见“液位开关”章节。

相关信息

10.1.1 压力开关

10.1.2 液位开关

10.1.3 入口压力传感器

10.1.1 压力开关

此系统可配置可调节压力开关以实现干转保护。请将压力开关安装在进水总管上。

如果入口压力小于低压力开关点，那么系统将无法启动。

如果由于入口压力不足导致系统运行时在压力开关作用下停止，那么在重新启动系统之前，务必增大入口压力设定值使其大于高压力开关点。

如有必要，可通过旋转螺钉 A 调整低压力开关点，或者通过旋转螺钉 B 调整高压力开关点使其大于低压力开关点。

请勿将低压力开关点设置为低于最小入口压力的某个值。参见“最小入口压力”章节。

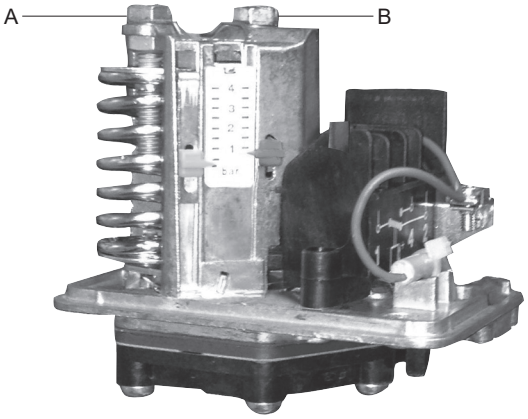

TM058436

调整开关点

位置	说明
A	低压力开关点
B	高压力开关点

相关信息

13.1.5 最小入口压力

10.1.2 液位开关

若入口无压力，在出厂时或交付后可以为系统选配液位开关。液位开关可实现多种功能，例如监控与进水总管相连的水箱内的液位。但前提是必须将液位开关连接到所有水泵的端子 3 和 10 上。请参见“功能模块”章节。

此外，还必须使用 Grundfos GO 配置数字输入以检测干转。

如果此前系统因干转而停止，那么系统会自动启动。利用 Grundfos GO 可将自动重启更改为手动重启。

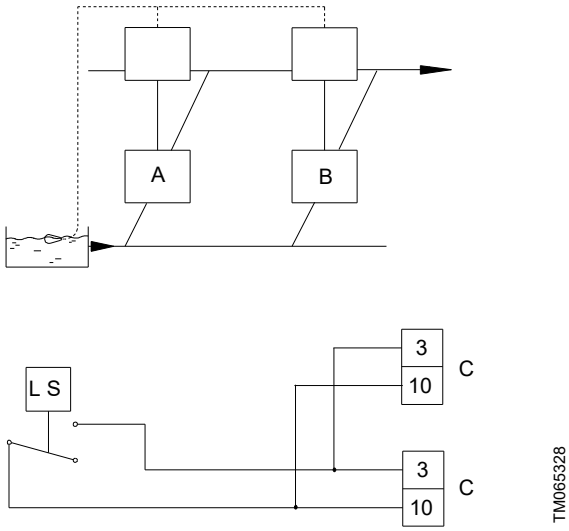

TM065328

与各个泵相连的液位开关

位置	说明
A	泵 1
B	泵 2
C	3：GND（框架） 10：数字输入

相关信息

5.3 功能模块

10.1.3 入口压力传感器

系统可在出厂时或交货后安装一个或两个入口压力传感器。该传感器可监测入口总管中的压力，但必须连接至其中一个模拟输入端。请参见“功能模块”章节。

模拟输入可通过 Grundfos GO 或 HMI 300 和 301 操作面板进行配置。 超限功能经过配置可用于检测干转。 出厂时，系统已完成设置，即当系统因干转而停止时，系统会自动重启。通过 Grundfos GO 或 HMI 300 和 301 操作面板可以将自动重启更改为手动重启。

相关信息

5.3 功能模块

11. 维修系统

危险
触电
死亡或重度人身伤害
- 对系统进行维护之前，应先确保电源断开连接并且不会意外接通。

警告
被污染的饮用水
死亡或重度人身伤害
- 停机后请根据当地法规冲洗系统。

警告
高空起吊
死亡或重度人身伤害
- 佩戴安全帽。

小心
高空起吊
轻度或中度人身伤害
- 使用合适的工具和起重设备进行维护。

11.1 电机维护

11.1.1 泵

水泵轴承和轴封无需维护。

若要将泵排空并且长时间不使用，请卸下其中一个联轴器护罩，然后在泵头和联轴器之间的轴上加注几滴硅油。这将有效地防止了轴端密封的粘结。

11.1.2 电机

保持电机散热片和风扇叶片清洁，以确保电机和电子设备充分冷却。

7.5 kW 以上的电机必须采用电机上标明的推荐间隔时间和正确类型的轴承润滑脂进行润滑。

11.1.3 断路器柜

断路器柜不需要维护。请保持其清洁、干燥。

11.1.4 服务组件

请登录 www.grundfos.com 格兰富产品中心查看维修手册。

11.2 终止系统运行

危险
触电
死亡或重度人身伤害
- 确保电源断开连接且不会意外接通。

如果长时间不使用系统，请将系统排空。

1. 切断主开关使系统停止运行。
2. 切断相应的电机保护断路器和自动断路器使单个泵停止运行。

11.2.1 霜冻防护

如果在严寒季节不需要使用水泵时，应该排空水泵以防损坏。

拧松泵头内的排气螺钉，然后从基座上取下排水塞，以排空水泵。

除非再次使用该系统，否则不要拧紧排气螺钉或重新安装排水塞。

11.3 停机后启动系统

警告
被污染的饮用水
死亡或重度人身伤害
- 停机后请根据当地法规冲洗系统。

请参见“启动系统”章节查看详细说明。

相关信息

6. 启动系统

12. 故障查找

危险
触电
死亡或重度人身伤害
- 在断路器柜或控制面板内进行任何连接之前必须先关闭电源并至少等待五分钟。
- 确保电源断开连接且不会意外接通。

12.1 系统启动后不运行

系统启动后不运行。

原因	纠正方法
实际压力高于或等于设定值。	等待压力下降或者降低系统出口侧的压力，然后检查系统是否可启动。
电源断开。	连接电源。
断路器已断开。	排除故障并接通断路器。
内部电机保护功能激活。	请联系格兰富。
断路器故障。	更换断路器。
电机故障。	维修或更换电机。
出口压力传感器故障。 • 出口压力传感器异常。 • 电缆断裂或短路。	• 更换出口压力传感器。 • 维修或更换电缆。

12.2 系统启动后立即停止

系统启动后立即停止。未达到运行压力。

原因	纠正方法
干转或入口无压力。	检查系统供水。当入口压力恢复时，水泵会在 15 秒后重新启动。

12.3 系统停止且无法重新启动

系统停止且无法重新启动。

原因	纠正方法
出口压力传感器故障。 • 出口压力传感器异常。 • 电缆断裂或短路。	• 更换出口压力传感器。采用 0-20 mA 或 4-20 mA 输出信号的出口压力传感器由系统进行监控。 • 维修或更换电缆。
接线盒装置故障。 • 泵 1 电源断开。 • 接线盒异常。	• 连接电源。 • 更换泵 1 的接线盒。 • 请联系格兰富。

12.4 系统供水不稳定

系统供水不稳定（仅适用于低功耗版本）。

原因	纠正方法
入口压力过低。	检查进水管和进水过滤器（如有可能）。
进水管或水泵局部被杂质堵塞。	清洁进水管或水泵。
水泵吸入空气。	检查进水管的泄漏点。
出口压力传感器异常。	更换出口压力传感器。

12.5 水泵运转但不供水

水泵运转，但不供水。

原因	纠正方法
进水管或水泵被杂质堵塞。	清洁进水管或水泵。
单向阀卡在关闭位置。	清洁止回阀。止回阀必须可以自由移动。
进水管泄漏。	检查进水管的泄漏点。
进水管或泵中有空气。	对泵排气。检查进水管的泄漏点。

12.6 系统无法达到设定值

系统无法达到设定值。

原因	纠正方法
电缆断裂或短路（泵 1 与泵 2 或 3 之间的 GENIbus 通信）。	维修或更换电缆。
泵 2 或 3 不运行。	将电源连接至泵，然后检查泵的状态。

12.7 轴封泄漏

轴封泄漏。

原因	纠正方法
轴封损坏。	更换轴封。
水泵泵轴的高度调节不准确。	重新调整泵轴高度。

12.8 泵工作时有噪音

泵工作时有噪音。

原因	纠正方法
水泵内存在气蚀。	清洁进水管或水泵，必要时请清洁入口过滤器。
由于水泵泵轴高度不准确，导致水泵不能自由旋转（存在磨擦阻力）。	重新调整泵轴高度。参见随系统提供的泵的安装和操作说明。

12.9 频繁启停

水泵频繁启停。

原因	纠正方法
隔膜水箱预充压力失当。	检查预充压力。
启动压力和停止压力之间的差值过小。	增大各个压力开关的压差设置。

此情况只发生在紧急运行的系统中。

13. 技术参数

13.1 运行条件

13.1.1 安装海拔高度

安装海拔高度是指安装位置高出海平面的高度。安装在海拔 1000 米以下的电机可以 100 %负荷运行。电机最高可以安装在海拔 3500 m 处。

安装在海拔 1000 米以上区域的电机不得满负荷运行，原因是该区域空气密度低，影响冷却效果。

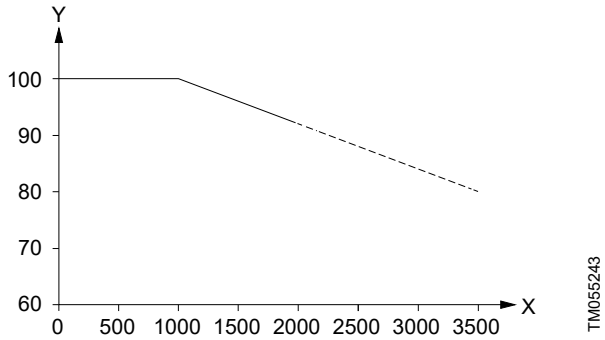

电机输出功率与安装海拔高度的关系

位置	说明
X	海拔 [m]
Y	P2 [%]

为保持电气隔离并确保间隙符合 EN 60664-1:2007 标准，您必须根据海拔高度调整电源电压：

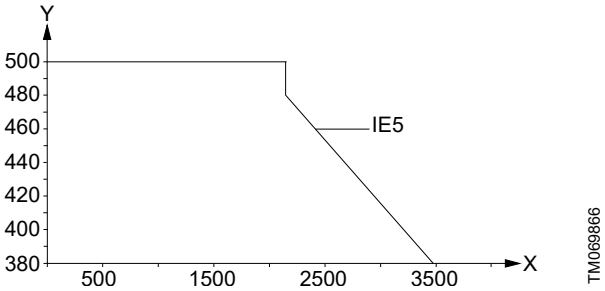

三相电机供电电压与海拔高度之间的关系

位置	说明
X	海拔 [m]
Y	供电电压 [V]

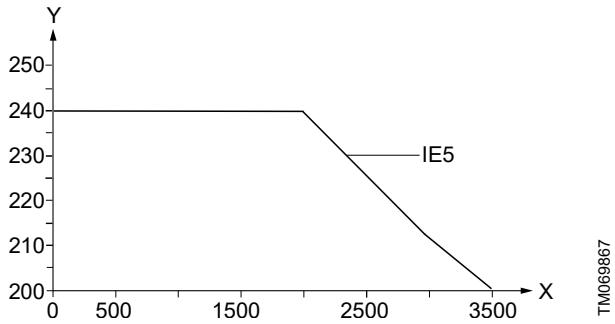

单相电机供电电压与海拔高度的关系

位置	说明
X	海拔 [m]
Y	供电电压 [V]

13.1.2 温度

环境温度

- 存放和运输期间：参见水泵的安装和操作说明
- 工作期间：0-40 °C

液体温度

- 5-60 °C

13.1.3 Humidity

Maximum 95 %.

13.1.4 最大工作压力

参见系统铭牌。

13.1.5 最小入口压力

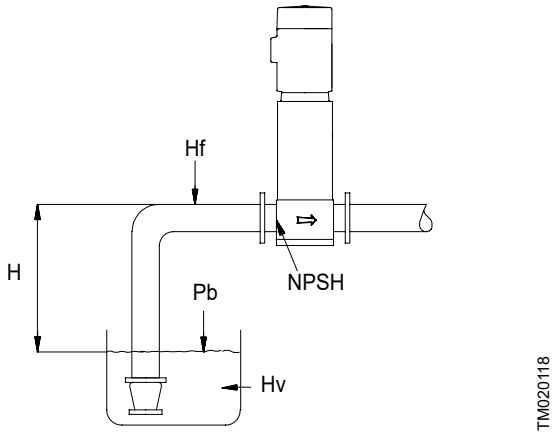

用于计算最低入口压力的参数

为避免泵中产生气蚀，需要达到的最小入口压力“ H”（以米扬程为单位）可以按照以下方式计算。

H	pb × 10.2 - NPSH - Hf - Hv - Hs
pb	气压计所示的大气压值，单位为 bar。大气压力可以设置为 1 bar。 在封闭的系统中， p_b 表示以 bar 为单位的系统压力。
NPSH	以米扬程为单位的净正吸入扬程 NPSH 值可以从 NPSH 曲线上单个泵所能提供的最大流量处读取。
Hf	在单个泵可提供的最高流量下，入口总管的摩擦损失（单位为米扬程）。 **注意：**如果单向阀安装在泵的入口侧，则必须计入该阀内的摩擦损失。详情请参见制造商数据。
Hv	蒸汽压力，单位为米扬程
Hs	安全裕度为最小 0.5 米扬程

如需了解详细信息，请访问格兰富产品中心。

在某些区域，该系统可配置低流量入口总管，从而使其更适合吸升运行。如需了解详细信息，请与格兰富联系。

止回阀位于入口侧

在吸升运行中，止回阀必须移动至入口侧。如果系统从水箱抽水，则通常会结合底阀一起使用。

示例

pb	1 bar
泵类型	CRE 15，50 Hz
流量	15 m^3/h
NPSH	1.2 米扬程
Hf	3 米扬程
液体温度	+60 °C
Hv	2.1 米扬程
H	pb × 10.2 - NPSH - Hf - Hv - Hs [米扬程]
H	1 × 10.2 - 1.2 - 3.0 - 2.1 - 0.5 = 3.4 米扬程

这意味着每台泵最高可达到 3.4 米扬程。
以 bar 为单位计算的压力:3.4 × 0.0981 = 0.33。
以 kPa 为单位计算的压力:3.4 × 9.81 = 33.4。

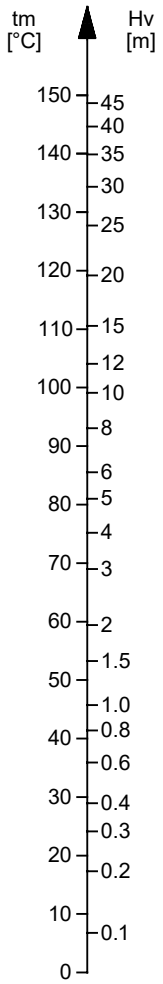

蒸气压力

13.1.6 最大入口压力

CME 泵无最大入口压力。
入口压力和泵闭阀压力的总和不得超过最大系统工作压力。

13.1.7 最小流量

由于存在过热风险，因此不得在某一泵的额定流量的 10%以下使用泵。

水泵不得在出口阀关闭时运行。

13.1.8 最大启动和停止次数

将系统通过电源启动和停止的次数限制在每小时 4 次。
当通过电源开启系统时，系统会在大约 5 秒钟后启动。
如果需要更加频繁的启动和停止系统，请使用外部启停输入。
当使用外置开关启动时，系统会立即启动。

13.1.9 隔膜水箱

将隔膜水箱预充压力设置为设定值的 0.7 倍。如果设定值发生变化，请调整预充压力使系统保持最佳运行状态。

请在系统无压力时测量预充压力。

我们建议您使用氮气作为预充气体。

13.2 电源电压

检查电源电压及频率是否与铭牌上列出的数值一致。
您可以使用标准型、快速熔断型或慢速熔断型保险丝。

配置单相泵的系统

3 × 380-415 V ± 10 %，50/60 Hz，N，PE。

推荐使用的保险丝型号

电机规格 [kW]	最小值 [A]	最大值 [A]
0.37 - 0.75	6	10
1.1 - 1.5	10	16

配置三相泵的系统

3 × 380-480 V ± 10 %, 50/60 Hz，PE。

推荐使用的保险丝型号

电机规格 [kW]	最小值 [A]	最大值 [A]
0.37 - 1.1	6	6
1.5	6	10
2.2	6	16
3	10	16
4	13	16
5.5	16	32
7.5	20	32
11	32	32

13.3 漏电电流

电机规格 [kW]	系统中泵的数量	漏电电流 [mA]
0.37 - 11（电源电压 ≤ 400 VDC）	2	< 7
	3	< 10.5
	4	< 14
18.0 - 20.0（电源电压 > 400 VDC）	2	< 10
	3	< 15
	4	< 20

漏电电流测试依据的标准： EN 61800-5-1:2007。

13.4 声压级别

声压级由水泵的具体类型和电机规格决定。您可以在水泵的安装和使用说明书中查找到声压级。

在多泵系统中，最大总声压 $L_{p,tot}$ 随泵的总数增加而成比例增大。你可以使用下面的公式来计算该值。

多个声源通常可以按照[6)]

$$L_{p,tot} = 10Log_{10}\sum_{i} 10^{\frac{L_{p,i}}{10}}$$

这意味着对于有多个相同泵的系统 N，可以通过将以下各值添加到特定泵类型的声压级中计算总系统声压级 $L_{p,tot}$。

$$L_{p,tot} = L_p + \Delta L_p$$

泵的数量 N	ΔL_p dB(A)
1	0
2	3
3	5
4	6
5	7
6	8

13.5 其他技术数据

EMC（电磁兼容性）：

符合 EN 61000-6-2:2005 和 61000-6-3:2007。

居民区，无限型分布，根据 CISPR11，B 级，1 组标准。

工业区，无限型分布， 根据 CISPR11，A 级，1 组标准。

参见泵的安装和操作说明。

防护等级

IP54。

绝缘等级

F (IEC 85)。

13.5.1 扭矩

端子的拧紧扭矩

端子	推荐扭矩 [Nm]
L1、L2、L3	2.2
PE	6
NC、C1、C2、NO	0.5
DI1、DI2、DI3、DI4、AI1、AI2、AI3、AO1、PT1、PT2、LT1、LT2、GND、24V、5V、TX、RX、A、Y、B、S24、ST1、ST2	0.5

其它零件的扭矩

零件名称	推荐扭矩 [Nm]
控制盒，上半部	6.5 - 7
电源盖	1.0 - 1.3
电缆密封套：	
M20/M40	1 - 1.5
盲塞：	
M20	1 - 1.5
0.5 英寸 NPT	8 - 10

6) 1992 年由 John Wiley and Sons 出版、Leo Beranek 和 Istvan L. Ver 编著的*噪声与振动控制工程*添加

13.6 出厂设置

●	该功能被启用。
❍	该功能被禁用。
-	该功能不可用。

设置	
设定点	传感器量程的 30%
运行模式	正常
控制模式	恒定压力
管道填充功能	❍
产品上的按钮	●
停机功能 (低流量停止功能)	●
控制器 (控制器设置)	●
Ti	0.5
Kp	0.5
操作范围	25-100 %
斜坡	
上坡	1 秒
下坡	3 秒
序号 (泵编号)	-
无线电通信	●
模拟输入 1	4-20 mA
模拟输入 2	❍
模拟输入 3	❍ [7]
Pt100/1000 输入 1	❍
Pt100/1000 输入 2	❍
数字输入 1	外部截止
数字输入 2	❍
数字输入/输出 3	干运行 [8]
数字输入/输出 4	❍
脉冲流量表	❍
预设设定点	❍
模拟输出	❍
外部设定点功能	❍
继电器信号 1	就绪
继电器信号 2	泵正在运行
超过限度 1	❍
超过限度 2	❍
液体技术功能	❍
静止加热	❍
电机轴承监控	●
泵名称	Hydro Multi-E

7) 若出厂时安装了入口传感器，则此时其处于激活状态。

8) 若出厂时安装了入口传感器，则此时其处于非激活状态。

14. 产品手册

有关系统的更多产品信息，请参见以下文档。这些文档可登录格兰富产品中心 www.grundfos.com 获取。

名称	文档编号	二维码	出版号
CR、CRI、CRN	安装和操作说明		96462123
CM	安装和操作说明		95121197
CRE、CRIE、CRNE、SPKE、MTRE、MTHE、CME、BMS MGE J 型和 K 型	安装和操作说明		92898118
CRE、CRIE、CRNE、SPKE、MTRE、MTHE、CME MGE 0.37 - 11 kW	安装和操作说明		98358864

15. 报废处理

15.1 废弃处置注意事项

危险
触电
死亡或重度人身伤害
- 拆卸系统之前，确保电源已断开连接，并且不会意外接通。

警告
可能压伤脚
死亡或重度人身伤害
- 吊起系统前，请务必查看铭牌及包装标签确保起重设备能够搬运系统。

警告
高温表面
死亡或重度人身伤害
- 拆卸系统前，确保系统已冷却。

小心
高空起吊
轻度或中度人身伤害
- 拆卸系统时，请佩戴安全装备。

小心
尖锐物品
轻度或中度人身伤害
- 拆卸系统时，请佩戴护目镜。

15.2 系统报废处理

必须以环保方式对此系统或其组件进行报废处理：

1. 使用公立或私立废品回收服务设施。
2. 如果当地没有公立或私立废品回收设施，请联系最近的格兰富公司或者维修站。

16. 文档质量反馈

欢迎使用智能设备扫描二维码，对此文档提供反馈。

点击此处提交您的意见回馈

A.1. 中国 RoHS

产品中有害物质的名称及含有信息表

部件名称	有害物质									
	铅 (Pb)	汞 (Hg)	镉 (Cd)	六价铬 (Cr6+)	多溴联苯 (PBBs)	多溴二苯醚 (PBDEs)	邻苯二甲酸二正丁酯（DBP）	邻苯二甲酸二异丁酯 (DIBP)	邻苯二甲酸丁基苄酯（BBP）	邻苯二甲酸二（2-乙基）己酯（DEHP）
泵壳	X	O	O	O	O	O	O	O	O	O
印刷电路板	X	O	O	O	O	O	O	O	O	O
紧固件	X	O	O	O	O	O	O	O	O	O
管件	X	O	O	O	O	O	O	O	O	O
定子	X	O	O	O	O	O	O	O	O	O
转子	X	O	O	O	O	O	O	O	O	O

注 1：O：表示该有害物质在该部件所有均质材料中的含量均不超出电器电子产品有害物质限制使用国家标准要求。
X：表示该有害物质至少在该部件的某一均质材料中含量超出电器电子产品有害物质限制使用国家标准要求。
注 2：以上未列出的部件，表明其有害物质含量均不超出电器电子产品有害物质限制使用国家标准要求。

TM090585

Argentina
Bombas GRUNDFOS de Argentina S.A.
Ruta Panamericana km. 37.500industin
1619 - Garín Pcia. de B.A.
Tel.: +54-3327 414 444
Fax: +54-3327 45 3190

Australia
GRUNDFOS Pumps Pty. Ltd.
P.O. Box 2040
Regency Park
South Australia 5942
Tel.: +61-8-8461-4611
Fax: +61-8-8340-0155

Austria
GRUNDFOS Pumpen Vertrieb Ges.m.b.H.
Grundfosstraße 2
A-5082 Grödig/Salzburg
Tel.: +43-6246-883-0
Fax: +43-6246-883-30

Belgium
N.V. GRUNDFOS Bellux S.A.
Boomsesteenweg 81-83
B-2630 Aartselaar
Tel.: +32-3-870 7300
Fax: +32-3-870 7301

Bosnia and Herzegovina
GRUNDFOS Sarajevo
Zmaja od Bosne 7-7A
BiH-71000 Sarajevo
Tel.: +387 33 592 480
Fax: +387 33 590 465
www.ba.grundfos.com
E-mail: grundfos@bih.net.ba

Brazil
BOMBAS GRUNDFOS DO BRASIL
Av. Humberto de Alencar Castelo Branco, 630
CEP 09850 - 300
São Bernardo do Campo - SP
Tel.: +55-11 4393 5533
Fax: +55-11 4343 5015

Bulgaria
Grundfos Bulgaria EOOD
Slatina District
Iztochna Tangenta street no. 100
BG - 1592 Sofia
Tel.: +359 2 49 22 200
Fax: +359 2 49 22 201
E-mail: bulgaria@grundfos.bg

Canada
GRUNDFOS Canada inc.
2941 Brighton Road
Oakville, Ontario
L6H 6C9
Tel.: +1-905 829 9533
Fax: +1-905 829 9512

China
GRUNDFOS Pumps (Shanghai) Co. Ltd.
10F The Hub, No. 33 Suhong Road
Minhang District
Shanghai 201106 PRC
Tel.: +86 21 612 252 22
Fax: +86 21 612 253 33

Colombia
GRUNDFOS Colombia S.A.S.
Km 1.5 vía Siberia-Cota Conj. Potrero Chico,
Parque Empresarial Arcos de Cota Bod. 1A.
Cota, Cundinamarca
Tel.: +57(1)-2913444
Fax: +57(1)-8764586

Croatia
GRUNDFOS CROATIA d.o.o.
Buzinski prilaz 38, Buzin
HR-10010 Zagreb
Tel.: +385 1 6595 400
Fax: +385 1 6595 499
www.hr.grundfos.com

Czech Republic
GRUNDFOS Sales Czechia and Slovakia s.r.o.
Čajkovského 21
779 00 Olomouc
Tel.: +420-585-716 111

Denmark
GRUNDFOS DK A/S
Martin Bachs Vej 3
DK-8850 Bjerringbro
Tel.: +45-87 50 50 50
Fax: +45-87 50 51 51
E-mail: info_GDK@grundfos.com
www.grundfos.com/DK

Estonia
GRUNDFOS Pumps Eesti OÜ
Peterburi tee 92G
11415 Tallinn
Tel.: + 372 606 1690
Fax: + 372 606 1691

Finland
OY GRUNDFOS Pumput AB
Trukkikuja 1
FI-01360 Vantaa
Tel.: +358-(0) 207 889 500

France
Pompes GRUNDFOS Distribution S.A.
Parc d'Activités de Chesnes
57, rue de Malacombe
F-38290 St. Quentin Fallavier (Lyon)
Tel.: +33-4 74 82 15 15
Fax: +33-4 74 94 10 51

Germany
GRUNDFOS GMBH
Schlüterstr. 33
40699 Erkrath
Tel.: +49-(0) 211 929 69-0
Fax: +49-(0) 211 929 69-3799
E-mail: infoservice@grundfos.de
Service in Deutschland:
kundendienst@grundfos.de

Greece
GRUNDFOS Hellas A.E.B.E.
20th km. Athinon-Markopoulou Av.
P.O. Box 71
GR-19002 Peania
Tel.: +0030-210-66 83 400
Fax: +0030-210-66 46 273

Hong Kong
GRUNDFOS Pumps (Hong Kong) Ltd.
Unit 1, Ground floor, Siu Wai industrial Centre
29-33 Wing Hong Street & 68 King Lam Street, Cheung Sha Wan
Kowloon
Tel.: +852-27861706 / 27861741
Fax: +852-27858664

Hungary
GRUNDFOS South East Europe Kft.
Tópark u. 8
H-2045 Törökbálint
Tel.: +36-23 511 110
Fax: +36-23 511 111

India
GRUNDFOS Pumps India Private Limited
118 Old Mahabalipuram Road
Thoraipakkam
Chennai 600 097
Tel.: +91-44 2496 6800

Indonesia
PT GRUNDFOS Pompa
Graha intirub Lt. 2 & 3
Jln. Cililitan Besar No.454. Makasar, Jakarta Timur
ID-Jakarta 13650
Tel.: +62 21-469-51900
Fax: +62 21-460 6910 / 460 6901

Ireland
GRUNDFOS (Ireland) Ltd.
Unit A, Merrywell Business Park
Ballymount Road Lower
Dublin 12
Tel.: +353-1-4089 800
Fax: +353-1-4089 830

Italy
GRUNDFOS Pompe Italia S.r.l.
Via Gran Sasso 4
I-20060 Truccazzano (Milano)
Tel.: +39-02-95838112
Fax: +39-02-95309290 / 95838461

Japan
GRUNDFOS Pumps K.K.
1-2-3, Shin-Miyakoda, Kita-ku
Hamamatsu
431-2103 Japan
Tel.: +81 53 428 4760
Fax: +81 53 428 5005

Kazakhstan
Grundfos Kazakhstan LLP
7' Kyz-Zhibek Str., Kok-Tobe micr.
KZ-050020 Almaty Kazakhstan
Tel.: +7 (727) 227-98-55/56

Korea
GRUNDFOS Pumps Korea Ltd.
6th Floor, Aju Building 679-5
Yeoksam-dong, Kangnam-ku, 135-916
Seoul, Korea
Tel.: +82-2-5317 600
Fax: +82-2-5633 725

Latvia
SIA GRUNDFOS Pumps Latvia
Deglava biznesa centrs
Augusta Deglava ielā 60
LV-1035, Rīga,
Tel.: + 371 714 9640, 7 149 641
Fax: + 371 914 9646

Lithuania
GRUNDFOS Pumps UAB
Smolensko g. 6
LT-03201 Vilnius
Tel.: + 370 52 395 430
Fax: + 370 52 395 431

Malaysia
GRUNDFOS Pumps Sdn. Bhd.
7 Jalan Peguam U1/25
Glenmarie industrial Park
40150 Shah Alam, Selangor
Tel.: +60-3-5569 2922
Fax: +60-3-5569 2866

Mexico
Bombas GRUNDFOS de México S.A. de C.V.
Boulevard TLC No. 15
Parque industrial Stiva Aeropuerto
Apodaca, N.L. 66600
Tel.: +52-81-8144 4000
Fax: +52-81-8144 4010

Netherlands
GRUNDFOS Netherlands
Veluwezoom 35
1326 AE Almere
Postbus 22015
1302 CA ALMERE
Tel.: +31-88-478 6336
Fax: +31-88-478 6332
E-mail: info_gnl@grundfos.com

New Zealand
GRUNDFOS Pumps NZ Ltd.
17 Beatrice Tinsley Crescent
North Harbour Industrial Estate
Albany, Auckland
Tel.: +64-9-415 3240
Fax: +64-9-415 3250

Norway
GRUNDFOS Pumper A/S
Strømsveien 344
Postboks 235, Leirdal
N-1011 Oslo
Tel.: +47-22 90 47 00
Fax: +47-22 32 21 50

Poland
GRUNDFOS Pompy Sp. z o.o.
ul. Klonowa 23
Baranowo k. Poznania
PL-62-081 Przeźmierowo
Tel.: (+48-61) 650 13 00
Fax: (+48-61) 650 13 50

Portugal
Bombas GRUNDFOS Portugal, S.A.
Rua Calvet de Magalhães, 241
Apartado 1079
P-2770-153 Paço de Arcos
Tel.: +351-21-440 76 00
Fax: +351-21-440 76 90

Romania
GRUNDFOS Pompe România SRL
S-PARK BUSINESS CENTER, Clădirea A2, etaj 2
Str. Tipografilor, Nr. 11-15, Sector 1, Cod 013714
Bucuresti, Romania
Tel.: 004 021 2004 100
E-mail: romania@grundfos.ro

Serbia
Grundfos Srbija d.o.o.
Omladinskih brigada 90b
11070 Novi Beograd
Tel.: +381 11 2258 740
Fax: +381 11 2281 769
www.rs.grundfos.com

Singapore
GRUNDFOS (Singapore) Pte. Ltd.
25 Jalan Tukang
Singapore 619264
Tel.: +65-6681 9688
Faxax: +65-6681 9689

Slovakia
GRUNDFOS s.r.o.
Prievozská 4D 821 09 BRATISLAVA
Tel.: +421 2 5020 1426
sk.grundfos.com

Slovenia
GRUNDFOS LJUBLJANA, d.o.o.
Leskoškova 9e, 1122 Ljubljana
Tel.: +386 (0) 1 568 06 10
Fax: +386 (0)1 568 06 19
E-mail: tehnika-si@grundfos.com

South Africa
GRUNDFOS (PTY) LTD
16 Lascelles Drive, Meadowbrook Estate
1609 Germiston, Johannesburg
Tel.: (+27) 10 248 6000
Fax: (+27) 10 248 6002
E-mail: lgradidge@grundfos.com

Spain
Bombas GRUNDFOS España S.A.
Camino de la Fuentecilla, s/n
E-28110 Algete (Madrid)
Tel.: +34-91-848 8800
Fax: +34-91-628 0465

Sweden
GRUNDFOS AB
Box 333 (Lunnagårdsgatan 6)
431 24 Mölndal
Tel.: +46 31 332 23 000
Fax: +46 31 331 94 60

Switzerland
GRUNDFOS Pumpen AG
Bruggacherstrasse 10
CH-8117 Fällanden/ZH
Tel.: +41-44-806 8111
Fax: +41-44-806 8115

Taiwan
GRUNDFOS Pumps (Taiwan) Ltd.
7 Floor, 219 Min-Chuan Road
Taichung, Taiwan, R.O.C.
Tel.: +886-4-2305 0868
Fax: +886-4-2305 0878

Thailand
GRUNDFOS (Thailand) Ltd.
92 Chaloem Phrakiat Rama 9 Road
Dokmai, Pravej, Bangkok 10250
Tel.: +66-2-725 8999
Fax: +66-2-725 8998

Turkey
GRUNDFOS POMPA San. ve Tic. Ltd. Sti.
Gebze Organize Sanayi Bölgesi
Ihsan dede Caddesi
2. yol 200. Sokak No. 204
41490 Gebze/ Kocaeli
Tel.: +90 - 262-679 7979
Fax: +90 - 262-679 7905
E-mail: satis@grundfos.com

Ukraine
ТОВ "ГРУНДФОС УКРАЇНА"
Бізнес Центр Європа
Столичне шосе, 103
м. Київ, 03131, Україна
Tel.: (+38 044) 237 04 00
Fax: (+38 044) 237 04 01
E-mail: ukraine@grundfos.com

United Arab Emirates
GRUNDFOS Gulf Distribution
P.O. Box 16768
Jebel Ali Free Zone, Dubai
Tel.: +971 4 8815 166
Fax: +971 4 8815 136

United Kingdom
GRUNDFOS Pumps Ltd.
Grovebury Road
Leighton Buzzard/Beds. LU7 4TL
Tel.: +44-1525-850000
Fax: +44-1525-850011

U.S.A.
Global Headquarters for WU
856 Koomey Road
Brookshire, Texas 77423 USA
Phone: +1-630-236-5500

Uzbekistan
Grundfos Tashkent, Uzbekistan
The Representative Office of Grundfos Kazakhstan in Uzbekistan
38a, Oybek street, Tashkent
Tel.: (+998) 71 150 3290 / 71 150 3291
Fax: (+998) 71 150 3292

© 2025 Grundfos Holding A/S, all rights reserved.

Trademarks displayed in this material, including but not limited to Grundfos and the Grundfos logo, are registered trademarks owned by The Grundfos Group.

92905027 **12.2025**

ECM: 1438963