Hydro MPC, ASEAN range

Hydro MPC systems with 2 to 6 pumps
50/60 Hz

GRUNDFOS

Table of contents

1. Product introduction 3
Applications 3
Features and benefits 3

2. Product data 5
Performance range, 50 Hz 5
Performance range, 60 Hz 6
Product range, 50 Hz 7
Product range, 60 Hz 8
Type key, Hydro MPC 9
Nameplate 10
Type key, Control MPC 11
Operating conditions 12

3. Construction. 13
CR pump 13
Shaft seal 13
Motors. 13
Manifold 14
Controller. 14
CU 352 14
IO 351 14
Base frame 15
System components 15
Flange dimensions 15

4. Functions 16
Overview of control variants 16
CU 352 control panel. 17
Overview of functions 19
Description of selected functions. 20

5. Installation 31
Mechanical installation. 31
Electrical installation 32
Hygiene. 32

6. Sizing 33
Maximum flow requirement 34
Required outlet pressure 34
System layout. 35
Consumption profile and load profile 35
Inlet pressure 36
System selection. 36
Accessories 36
Understanding the curve charts 38
Example: How to select a system 39

7. Curve conditions 40
How to read the curve charts 40

8. Curve charts, Hydro MPC-E/-S, 50 Hz. 41
Hydro MPC-E/-S with CR, CRI 3 41
Hydro MPC-E/-S with CR, CRI 5 42
Hydro MPC-E/-S with CR, CRI 10 43
Hydro MPC-E/-S with CR, CRI 15 44
Hydro MPC-E/-S with CR, CRI 20 45
Hydro MPC-E/-S with CR 32 46
Hydro MPC-E/-S with CR 45 47
Hydro MPC-E/-S with CR 64 48
Hydro MPC-E/-S with CR 90 49

9. Curve charts, Hydro MPC-E/-S, 60 Hz. 50
Hydro MPC-E/-S with CR, CRI 3 50
Hydro MPC-E/-S with CR, CRI 5 51
Hydro MPC-E/-S with CR, CRI 10 52
Hydro MPC-E/-S with CR, CRI 15 53
Hydro MPC-E/-S with CR, CRI 20 54
Hydro MPC-E/-S with CR 32 55
Hydro MPC-E/-S with CR 45 56
Hydro MPC-E/-S with CR 64 57
Hydro MPC-E/-S with CR 90 59

10. Technical data, Hydro MPC-E/-S, 50 Hz . . . 61
Hydro MPC-E/-S with CR, CRI 3, CR, CRI 5. 61
Hydro MPC-E/-S with CR, CRI 10 64
Hydro MPC-E/-S with CR, CRI 15, CR, CRI 20 . . . 67
Hydro MPC-E/-S with CR 32 72
Hydro MPC-F/-S with CR 45, CR 64 75
Hydro MPC-E/-S with CR 90 79

11. Technical data, Hydro MPC-E/-S , 60 Hz. . . 82
Hydro MPC-E/-S with CR, CRI 3, CR, CRI 5. 82
Hydro MPC-E/-S with CR, CRI 10 85
Hydro MPC-E/-S with CR, CRI 15, CR, CRI 20 . . . 88
Hydro MPC-E/-S with CR 32 92
Hydro MPC-E/-S with CR 45, CR 64 95
Hydro MPC-E/-S with CR 90 99

12. Optional equipment 102
Optional equipment, Hydro MPC. 102
Optional equipment, Control MPC 106

13. Accessories 109
Dry-running protection 109
Diaphragm tank 109
Foot valve 110
Adjustable vibration damper 110
Grundfos GO 110
Additional documentation. 110

14. Alternative systems 111

15. Grundfos Product Center 112

16. Grundfos GO 113

1. Product introduction

Applications

Grundfos Hydro MPC systems are designed for transfer and pressure boosting of clean water in places such as:

- waterworks
- blocks of flats
- hotels
- industry
- hospitals
- schools.

As standard, the systems consist of two to six identical CR or CRI pumps connected in parallel and mounted on a common base frame provided with a controller and all the necessary fittings.

You can remove the pumps of the system without interfering with the pipes on either side of the manifolds.

The systems are available in three control variants. For further information, see sections Product range, 50 Hz, Product range, 60 Hz and Overview of control variants.

Hydro MPC-E

- Systems are with two to six identical electronically speed-controlled pumps.
- Pipe connection is from R 2 to DN 350.
- Systems from 0.37 to 37 kW are fitted with CR, CRI pumps connected to Grundfos CUE frequency converters; one per pump.

Hydro MPC-S

- Systems are with two to six identical mains-operated CR, CRI pumps.
- Pipe connection is from R 2 to DN 350.
- Motor sizes are from 0.37 to 37 kW.

Related information

Product range, 50 Hz
Product range, 60 Hz
Overview of control variants

Features and benefits

Perfect constant-pressure control

GR-1014555

CU 352

The pumps of the Hydro MPC systems are controlled individually by the CU 352 multi-pump control unit which contains application-optimised software and pump-curve data. CU 352 knows the exact hydraulic and electrical data of the pumps to be controlled. A log function monitors the system performance over a period of time.

User-friendliness

Hydro MPC features a built-in startup wizard in a wide range of languages that guides the installer through a series of steps until the system is correctly installed and commissioned.

When the installation is complete, the large, user-friendly colour display ensures that day-to-day operations are equally easy.

Reliability

TM1040082

Grundfos CRE pumps

Hydro MPC system is built on the highly renowned Grundfos CR and CRE pumps range. CR and CRE pumps are known for their reliability, efficiency and adaptability.

Every vital piece of Hydro MPC is made by Grundfos. You are guaranteed long-lasting technology that requires a minimum of maintenance and provides a maximum of efficiency.

Low energy consumption

All motors used in the Hydro MPC systems meet the legislative requirements of the EuP IE3 level.

Furthermore, Hydro MPC uses pump curve data to calculate and optimise the cut-in and cut-out of pumps.

High-efficient motors, advanced control in combination with optimised hydraulics for both the CR pump and the manifold ensure that the system uses a minimum of energy.

Flexibility

The elements of Hydro MPC system can be combined in a number of ways to make sure that we build the perfect solution for you.

Custom-built solutions

If this data booklet does not provide you with a solution that meets your specific pumping needs, contact us.

2. Product data

Performance range, 50 Hz

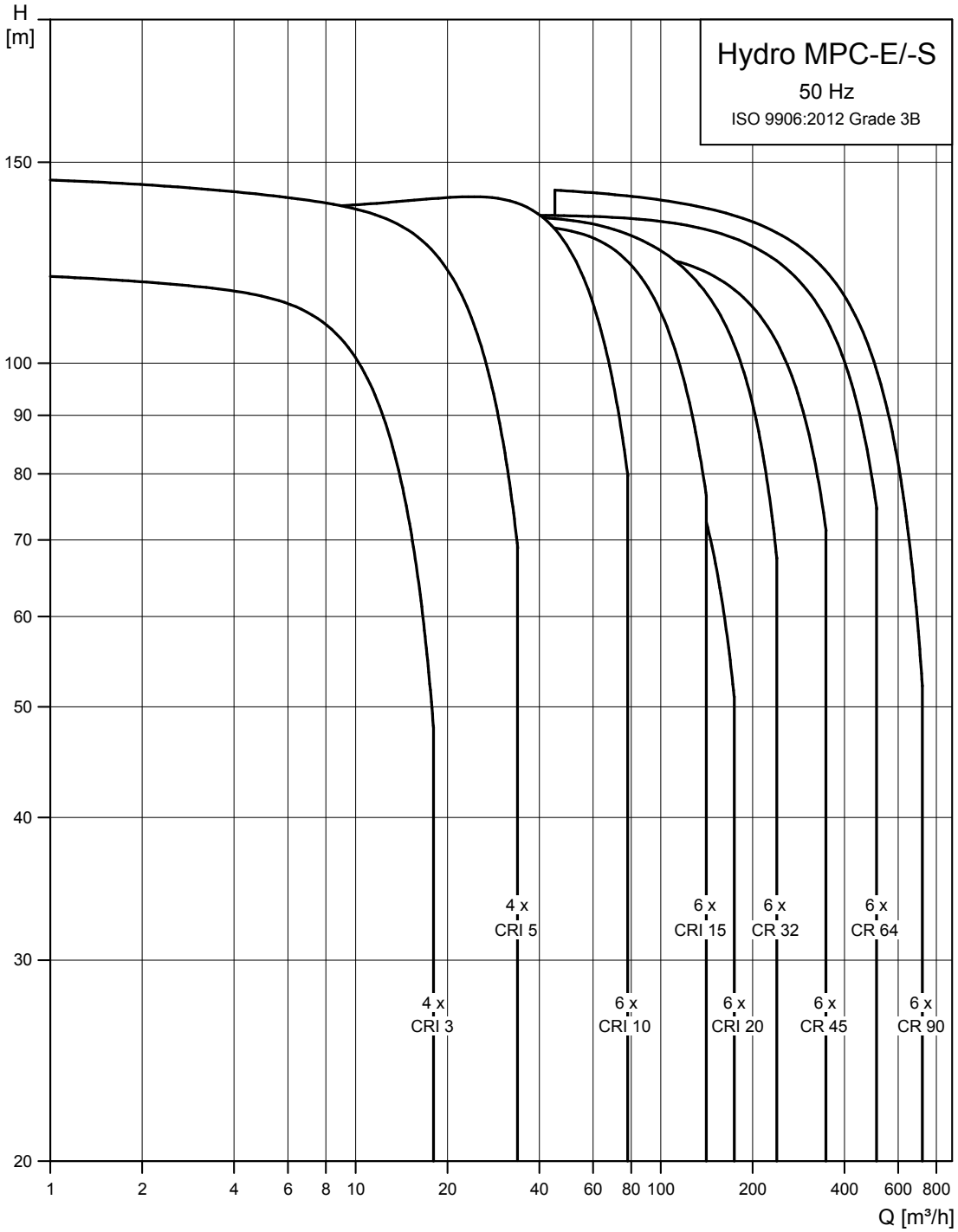

TM063290

Performance range, 60 Hz

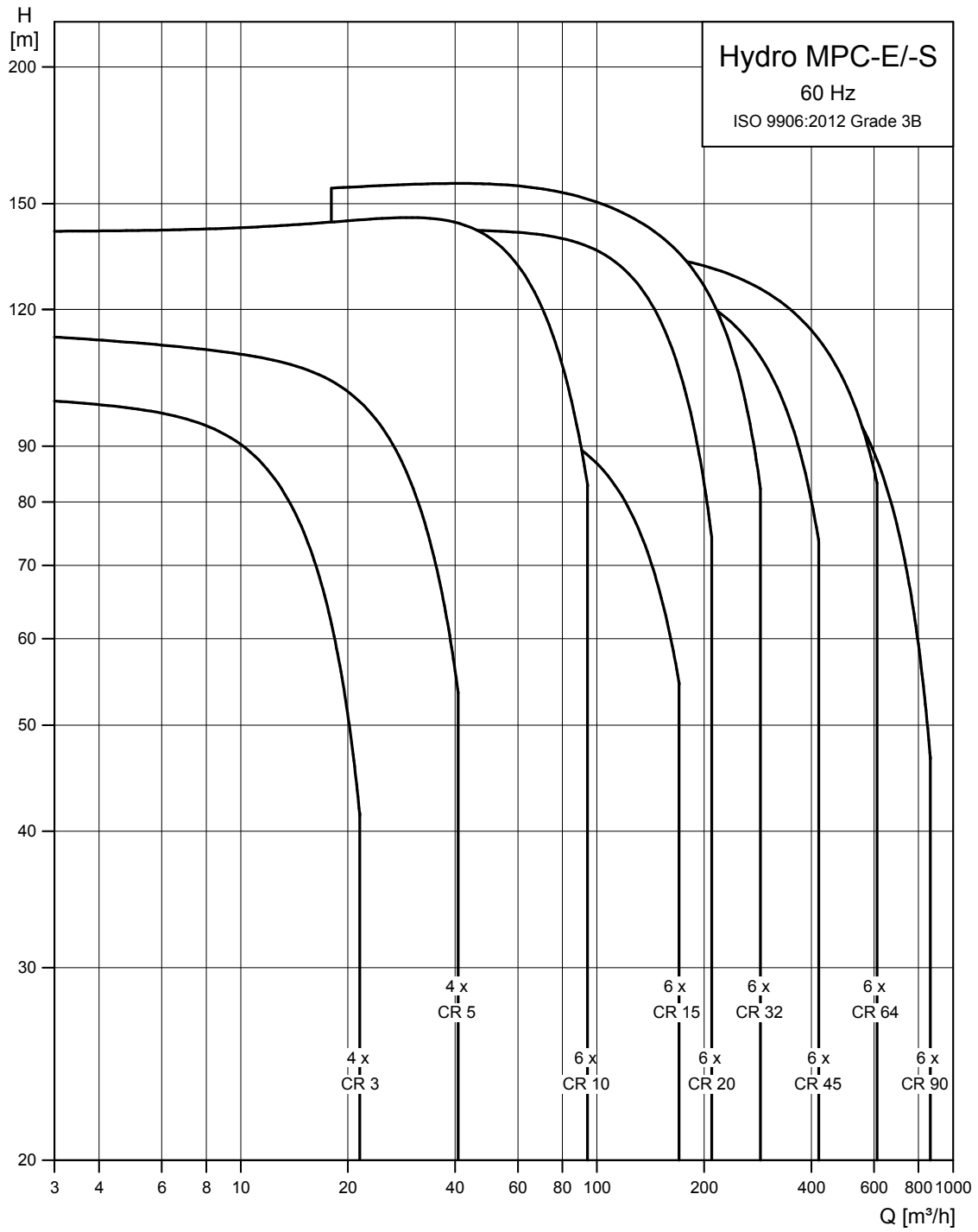

TM063292

Product range, 50 Hz

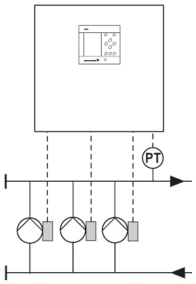

TM030993

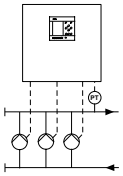

TM030999

Control variant	Hydro MPC-E	Hydro MPC-S
Frequency	**50 Hz**	**50 Hz**
Hydraulic data		
Maximum head [m]	144	144
Flow rate [m^3/h]	0-720	0-720
Liquid temperature [°C]	0-60 [1]	0-60 [1]
Maximum operating pressure [bar]	16 [2]	16 [2]
Motor data		
Number of pumps	2-6	2-6
Motor power [kW]	0.37 - 30	0.37 - 30
Shaft seal		
HQQE (SiC/SiC/EPDM)	●	●
Materials		
CRN 3 to CRN 90: Stainless steel EN 1.4401 / AISI 316	●	●
CRI 3 to CRI 20: Stainless steel EN 1.4301 / AISI 304	●	●
CR 3 to CR 90: Cast iron and stainless steel EN 1.4301 / AISI 304	●	●
Manifold: Stainless steel [3]	●	●
Pipework connection		
Union connection	R 2 - R 2 1/2	R 2 - R 2 1/2
DIN flange	DN 80 - DN 350	DN 80 - DN 350

1) Higher temperature available on request.

2) Systems with a maximum operating pressure higher than 16 bar are available on request.

3) In some regions, galvanised manifolds are available as an option. For further information, contact Grundfos.

● Available as standard.

Related information

Overview of control variants

Product range, 60 Hz

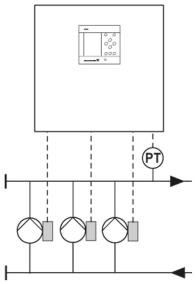

TM030993

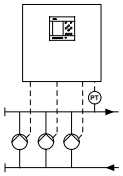

TM030999

Control variant	Hydro MPC-E	Hydro MPC-S
Frequency	**60 Hz**	**60 Hz**
Hydraulic data		
Maximum head [m]	144	144
Flow rate [m^3/h]	0-876	0-876
Liquid temperature [°C]	0-60 [4)]	0-60 [4)]
Maximum operating pressure [bar]	16 [5)]	16 [5)]
Motor data		
Number of pumps	2-6	2-6
Motor power [kW]	0.37 - 37	0.37 - 37
Shaft seal		
HQQE (SiC/SiC/EPDM)	●	●
Materials		
CRN 3 to CRN 90: Stainless steel EN 1.4401 / AISI 316	●	●
CRI 3 to CRI 20: Stainless steel EN 1.4301 / AISI 304	●	●
CR 3 to CR 90: Cast iron and stainless steel EN 1.4301 / AISI 304	●	●
Manifold: Stainless steel [6)]	●	●
Pipework connection		
Union connection	R 2 - R 2 1/2	R 2 - R 2 1/2
DIN flange	DN 80 - DN 350	DN 80 - DN 350

4) Higher temperature available on request.

5) Systems with a maximum operating pressure higher than 16 bar are available on request.

6) In some regions, galvanised manifolds are available as an option. For further information, contact Grundfos.

● Available as standard.

Related information

Overview of control variants

Type key, Hydro MPC

Example: Hydro MPC-E 6 CRNE155-1-1 U1 A-A-A-ABCD

Code	Explanation		Designation
Hydro MPC			Name
E	E: All pumps E Motor or CUE F: Fixed speed pumps, 1 CUE	S: Fixed speed pumps X: Customised system type	System type
6			Number of main pumps
CRNE155-1-1			Pump type
U1	U1: 3 x 380-415 V, N, PE, 50/60 Hz U2: 3 x 380-415 V, PE, 50/60 Hz U3: 3 x 380-415 V, N, PE, 50 Hz U4: 3 x 380-415 V, PE, 50 Hz U5: 3 x 380-415V, N, PE, 60 Hz U6: 3 x 380-415 V, PE, 60 Hz U7: 1 x 200-240 V, PE, 50/60 Hz U8: 1 x 200-240 V, N, PE, 50/60 Hz U9: 3 x 220-240 V, PE, 60 Hz UA: 3 x 440-480 V, PE, 60 Hz UB: 1 x 220-240 V, N, PE, 50/60 Hz UC:1 x 220-240 V, N, PE, 50 Hz UD: 3 x 440-480 V, N, PE, 60 Hz UJ: 1 x 208-230 V, PE, 60 Hz UK: 3 x 208-230 V, PE, 60 Hz UL: 3 x 460-480 V, PE, 60 Hz UX: CSU variant (special voltage rating)		Voltage code
A	A: Systems with the controller mounted on the same base frame as the pumps. B: Systems with the controller centred on the base frame. C: Systems with the controller mounted on its own base for floor mounting. The controller can be placed up to 2 metres from the pumps. D: Systems with the controller mounted on its own base frame. The controller can be placed up to 2 metres from the pumps. E: APAC design. Systems with the controller mounted on the same base frame as the pumps. F: APAC design. Systems with the controller centred on the base frame. G: APAC design. Systems with the controller mounted on its own base for floor mounting. The controller can be placed up to 2 metres from the pumps. H: APAC design. Systems with the controller mounted on its own base frame. The controller can be placed up to 2 metres from the pumps. I: APAC design. Systems with the controller prepared for wall mounting. The controller can be placed up to 2 metres from the pumps. W: Systems with the controller prepared for wall mounting. The controller can be placed up to 2 metres from the pumps.		Design
A	A: E B: DOL C: SD		Starting method
A	A: Stainless steel manifold and base frame, and standard valves B: Stainless steel manifold, base frame and valves C: Galvanised steel manifold and base frame, and standard valves D: Stainless steel manifold, galvanised steel base frame, and standard valves H: Galvanised steel manifold and base frame painted black, and standard valves I: Stainless steel manifold and base frame painted black, and standard valves X: Customised material combination		Material combination
ABCD	A: Standard hydraulic, PN 16 B: Pilot pump C: Bypass D: NRV on inlet E: Elbow manifold F: No inlet manifold G: Diaphragm tank H: Dry-running protection I: Repair switch J: Redundant sensor or switch K: 1 free pump position L: 2 free pump position M: 3 free pump position	N: PN 10 pressure rating O: PN 25 pressure rating P: Low prepressure Q: PN 40 pressure rating R: RPM = 50 Hz S: Customised variant T: Certificate U: Undersized motor V: Standard controls with options W: Customised controls 3W: Hydro DDD panel X: More than 4 options Y: Controller with double door	Option

Related information

Optional equipment, Hydro MPC

Nameplate

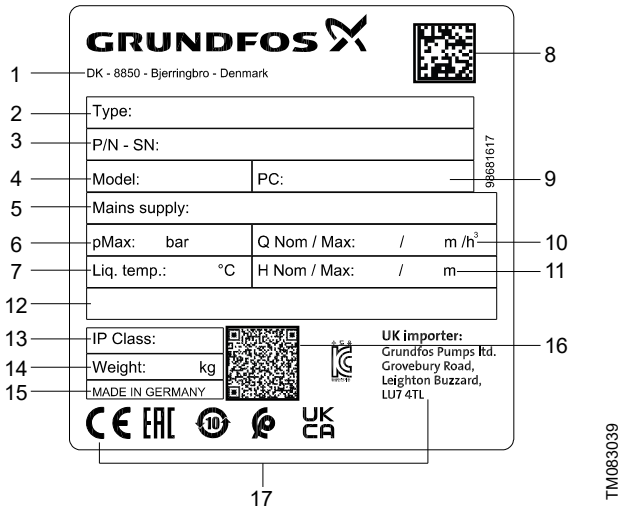

Nameplate

Pos.	Description
1	Company address
2	Product type
3	Product number and Serial number
4	Code for model
5	Mains supply
6	Maximum operating pressure
7	Liquid temperature
8	Barcode
9	Production code
10	Nominal flow rate and maximum flow rate
11	Normal head and max head
12	Technical documents
13	IP class
14	Weight
15	Country of origin
16	QR code
17	Approval marks

Type key, Control MPC

Example: Control MPC-E 6x 000A DOL U1 W A O

Code	Explanation	Designation
Control MPC		Type range
E	E: All pumps with E motor EC: All pumps with CUE F: Fixed-speed pumps, 1 CUE EF: All VFD non CUE S: Fixed-speed pumps E2: 2000 series	System type
6x		Number of main pumps
000A		Main pump current
DOL	E: Electronic DOL: Direct-on-line starter SD: Star-delta starter SST: Soft starter	Starting method
U1	U11: 3 x 400 V, 50 Hz, PE U12: 3 x 400 V, 60 Hz, PE U13: 3 x 400 V, 50 Hz, N, PE U14: 3 x 400 V, 60 Hz, N, PE U15: 3 x 380 V, 50 Hz, PE U16: 3 x 380 V, 50 Hz, N, PE UX: -	Voltage supply
W	W: Wall mounting F: Floor standing O: Outdoor X: Customized	Design
Standard version A	O10: Dry-running protection, digital input (or O9) O9: Dry-running protection, inlet-pressure sensor (or O10) O1: Redundant primary sensor (prepared for connection only) O2: Show repair switches in wiring diagram	Standard versions
Standard version B	O10: Dry-running protection, digital input (or O9) O9: Dry-running protection, inlet-pressure sensor (or O10) O1: Redundant primary sensor (prepared for connection only) O2: Show repair switches in wiring diagram O3: Emergency operation switch (mounted in panel)	
Standard version C	O10: Dry-running protection, digital input (or O9) O9: Dry-running protection, inlet-pressure sensor (or O10) O1: Redundant primary sensor (prepared for connection only) O2: Show repair switches in wiring diagram O12: Operation light pump (lamp in front door) O11: Fault light pump (lamp in front door) O16: Voltmeter (in front door) O15: Ammeter (in front door)	
Standard version D	O10: Dry-running protection, digital input O9: Dry-running protection, inlet-pressure sensor O1: Redundant primary sensor O2: Show repair switches in wiring O3: Emergency operation switch O4: IO 351B interface	
Standard version E	O7: Dry-running protection, electrode relay O1: Redundant primary sensor O2: Show repair switches in wiring diagram O3: Emergency operation switch	
Standard version F	O8: Dry-running protection, vibration limit switch O1: Redundant primary sensor O2: Show repair switches in wiring diagram O3: Emergency operation switch	
O	See section Optional equipment, Control MPC	Option

Related information

Optional equipment, Control MPC

Operating conditions

Operating pressure

As standard, the maximum operating pressure is 16 bar.

The Hydro MPC systems with a higher maximum operating pressure are available on request.

Temperature

Liquid temperature	5-60 °C
Ambient temperature	0-40 °C

Higher liquid temperature capability is available on request.

Relative humidity

Maximum 95 %.

Sound pressure level

The sound pressure depends on the specific pump type and motor size and can be found in the Installation and operating instructions of the pump.

In systems with multiple pumps the maximum total sound pressure $L_{p,tot}$ will increase according to the total number of pumps and can be calculated by the equation stated below.

Multiple sound sources may generally be added as

$$L_{p,tot} = 10 Log_{10} \sum_{i} 10^{\frac{L_{p,i}}{10}}$$

This means that for a system including a number of identical pumps N, the total system sound level $L_{p,tot}$ may be obtained by adding the values below to the sound level of the specific pump type.

$$L_{p,tot} = L_p + \Delta L_p$$

Number of pumps N	ΔL_p
	dB(A)
1	0
2	3
3	5
4	6
5	7
6	8

7) Leo Beranek and Istvan L. Ver, *Noise and Vibration Control Engineering*, John Wiley and Sons, 1992

3. Construction

CR pump

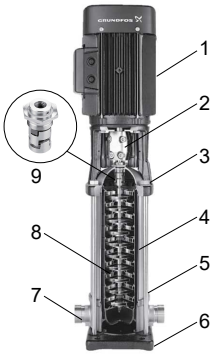

TM078847

CR pump

Pos.	Description
1	Motor
2	Coupling
3	Pump head
4	Sleeve
5	Staybolts
6	Base plate
7	Base
8	Impeller
9	Shaft seal (cartridge type)

CR pumps are non-self-priming, vertical multistage centrifugal pumps.

Each pump consists of a base and a pump head. The chamber stack and outer sleeve are secured between the pump head and the base by means of staybolts. The base has inlet and outlet ports at the same level (in line) and of the same port size.

CR pumps have pump head and base of cast iron while CRI pumps have pump head and base of stainless steel.

All hydraulic parts are made of stainless steel.

For further information, see the documents below.

Title	Publication number
CR, CRI, CRN, CRE, CRIE, CRNE	V7023751
CR, CRI, CRN, CRT, CRE, CRIE, CRNE, CRTE custom-built pumps	96486346

The documents are available in Grundfos Product Center on www.grundfos.com. See section Grundfos Product Center.

For information about the pump position in the system, see section System components.

Related information

System components

15. Grundfos Product Center

Shaft seal

All pumps have a maintenance-free mechanical cartridge type HQQE shaft seal. Seal faces are silicon carbide. Rubber parts are of EPDM.

Other shaft seal variants are available on request.

GR3395H

Cartridge shaft seal

You can replace the shaft seal without dismantling the pump. You can replace the shaft seal of pumps with motors of 11 kW and up without removing the motor.

For further information, see the document below.

Title	QR code	Link	Publication number
CR, CRN 95-255		*http://net.grundfos.com/qr/i/99233360*	99233360

The document is available in Grundfos Product Center on www.grundfos.com. See section Grundfos Product Center.

Related information

15. Grundfos Product Center

Motors

CR and CRI pumps

CR and CRI pumps are fitted with a totally enclosed, fan-cooled, 2-pole Grundfos standard motor.

Principal dimensions are in accordance with the EN standards.

Electrical tolerances to EN 60034.

Three-phase Grundfos motors from 3 kW and up have a built-in thermistor (PTC) according to DIN 44082, class TP 211 according to IEC 34-11.

For further information, see the Installation and operating instructions for the CR, CRI pumps.

Manifold

A stainless steel manifold (AISI 316/EN DIN 1.4571/EN DIN 1.4404) is fitted on the inlet and outlet side of the pumps.

In some regions, galvanised manifolds are available as an option. For further information, contact Grundfos.

An isolating valve and a non-return valve are fitted between the outlet manifold and the individual pumps. The non-return valve can be fitted on the inlet side on request.

For information about the position of the inlet and outlet manifolds, see section System components.

Related information

System components

Controller

The controller is fitted with all the necessary components. If necessary, the Hydro MPC systems are fitted with a fan to remove surplus heat generated by the frequency converter.

Controller variants

The controller is divided into five different designs:

- **Design E:** ASEAN design and systems with the controller mounted on the same base frame as the pumps.
- **Design F:** ASEAN design and systems with the controller centred on the base frame.
- **Design G:** ASEAN design and systems with the controller mounted on its own base for floor mounting. You can place the controller up to 2 metres from the pumps.
- **Design H:** ASEAN design and systems with the controller mounted on its own base frame. You can place the controller up to 2 metres from the pumps.
- **Design I**: ASEAN design and systems with the controller prepared for wall mounting. You can place the controller up to 2 metres from the pumps.

Operation lights located in the door of the controller are standard on the Hydro MPC ASEAN range.

Emergency operation switch

As standard, the emergency operation switches are fitted into the controller (one for each pump). They enable emergency operation if a fault occurs in the CU 352.

The motor protection and the dry-running protection are not activated during emergency operation.

For further information, see sections System components and Technical data.

Related information

System components

CU 352

The CU 352 multi-pump control unit of the system is located in the door of the controller.

GR-1014555

CU 352

The CU 352 features a colour display, ten buttons and two indicator lights. The control panel enables manual setting and change of parameters such as setpoint, start/stop of system or individual pumps.

The CU 352 has application-optimised software for adapting the system to the application in question.

IO 351

IO 351 is a module for exchange of digital and analog signals between CU 352 and the remaining electrical system via GENIbus. IO 351 is available in the A and B variants.

IO 351A and IO 351B

IO 351A

IO 351A is used for one to three mains-operated Grundfos pumps.

IO 351B

IO 351B is used for one to six mains-operated Grundfos pumps and/or pumps controlled by external Grundfos CUE frequency converters. The module can also be used as an input-output module for communication with monitoring equipment or other external equipment.

Base frame

The pumps in a Hydro MPC system are mounted on a common base frame. The base frame is made of stainless steel AISI 304, except for systems with CR, CRE 95 and above are mounted on a corrosion protected steel base frame.

System components

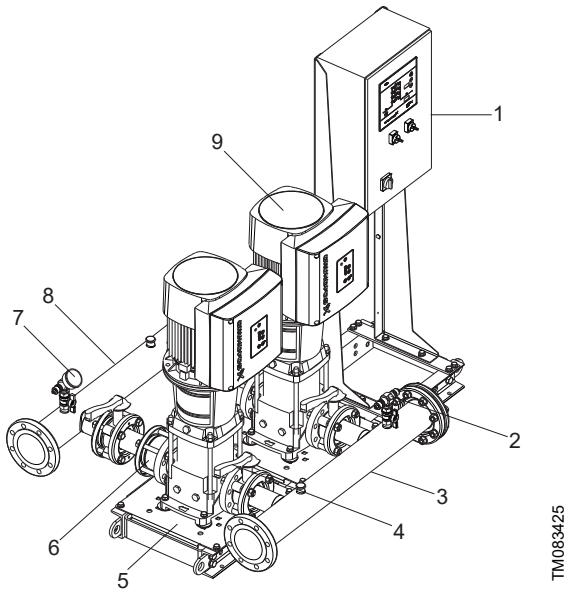

System components

Pos.	Description	Quantity
1	Controller	1
2	Pressure transmitter at inlet side	1
3	Inlet manifold	1
4	Isolating valve	two per pump
5	Base frame	1
6	Non-return valve	one per pump
7	Pressure transmitter and pressure gauge at outlet side	1
8	Outlet manifold	1
9	Pump	2-6

Flange dimensions

PN 16 flanges, DN 80-200

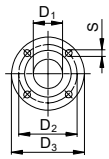

	Standard: EN 1092-2 PN 16 (1.6 MPa)				
	Nominal diameter (D)				
DN	**80**	**100**	**125**	**150**	**200**
D_1	80	100	125	150	200
D_2	160	180	210	240	295
D_3	200	220	250	285	340
S	8 x 19	8 x 19	8 x 19	8 x 23	12 x 23

PN 16 flanges, DN 250-500

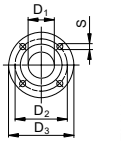

	Standard: EN 1092-2 PN 16 (1.6 MPa)					
	Nominal diameter (DN)					
DN	**250**	**300**	**350**	**400**	**450**	**500**
D_1	250	300	350	400	450	500
D_2	355	410	470	525	585	650
D_3	405	460	520	580	640	715
S	12 x 28	12 x 28	16 x 28	16 x 28	20 x 30	20 x 33

4. Functions

Overview of control variants

Systems with speed-controlled pumps	Systems with mains-operated pumps
Hydro MPC-E	**Hydro MPC-S**
System with three CR, CRI pumps.	System with three mains-operated CR, CRI pumps.
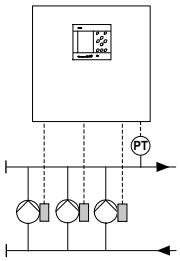 TM030993	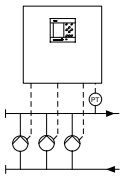 TM030999
One CR, CRI pump in operation.	One mains-operated CR, CRI pump in operation.
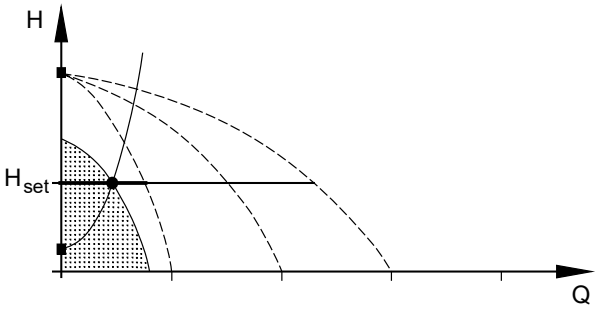 TM007995	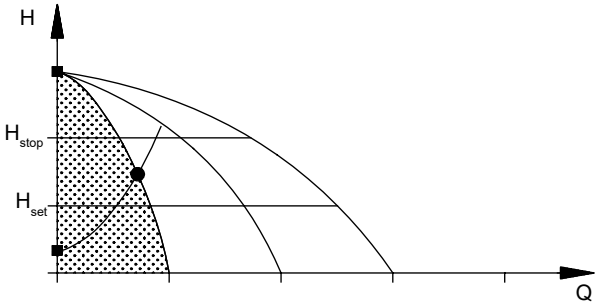 TM039204
Three CR, CRIE pumps in operation.	Three mains-operated CR, CRI pumps in operation.
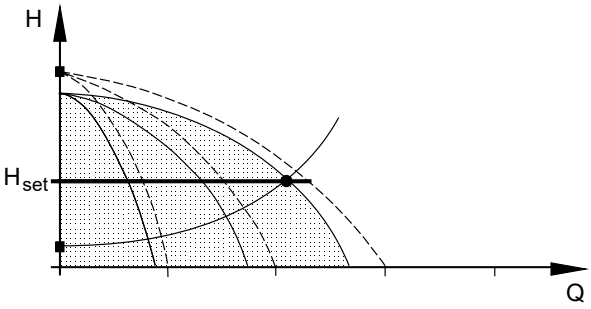 TM007996	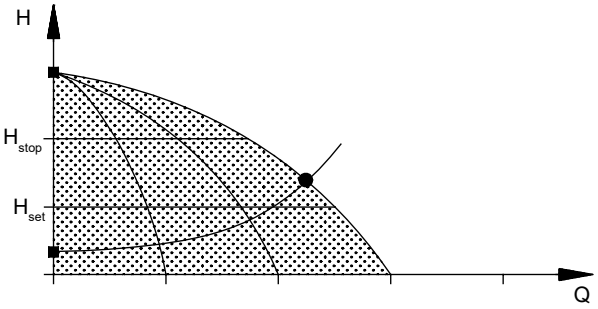 TM039203
• Hydro MPC-E maintains a constant pressure through continuous adjustment of the speed of the pumps. • The system performance is adjusted to the demand through cutting in/out the required number of pumps and through parallel control of the pumps in operation • Pump changeover is automatic and depends on load, operating hours and fault. • All pumps in operation will run at equal speed.	• Hydro MPC-S maintains an almost constant pressure through cutting in/out the required number of pumps. • The operating range of the pumps will lie between H_{set} and H_{stop} (cut-out pressure). • Pump changeover is automatic and depends on load, operating hours and fault.

CU 352 control panel

The control panel in the front cover of the controller features a display, a number of buttons and two indicator lights. The control panel enables manual setting and monitoring of the performance of the system.

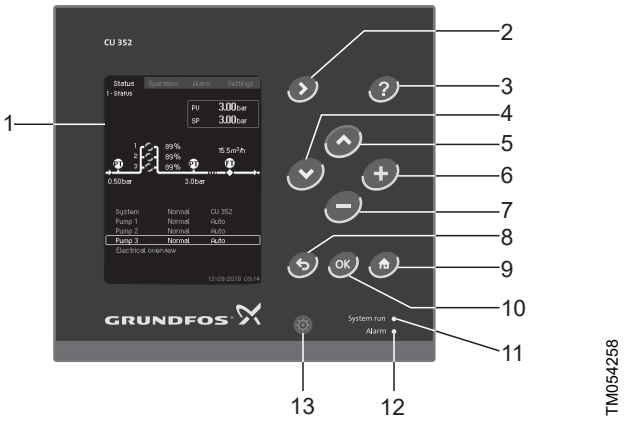

CU 352 control panel

Pos.	Description
1	Display
2	Arrow to the right
3	Help
4	Down
5	Up
6	Plus
7	Minus
8	Esc.
9	Home
10	OK
11	Indicator light, operation (green)
12	Indicator light, fault (red)
13	Display brightness

Status menu

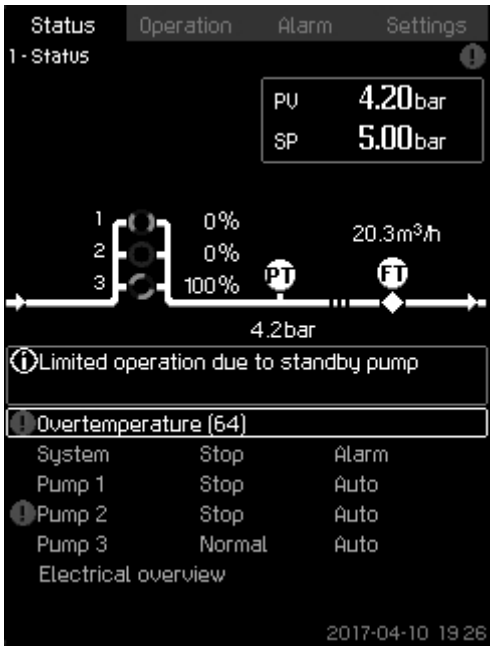

***Status** menu*

Description

- Reading of process value (PV) of control parameter and selected setpoint (SP).
- Graphical illustration of system (upper display half).
- Indication if any incidents occur during operation (middle of display).
- Reading of performance of system and individual pumps (lower display half).
- Button ⓘ for further information.
- Active buttons are on.

Operation menu

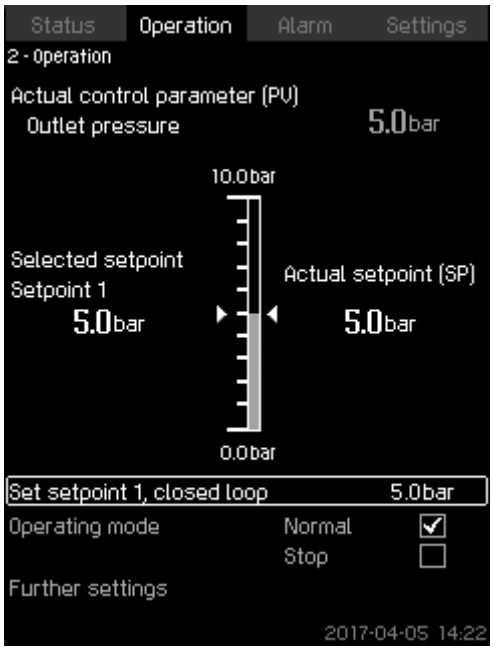

***Operation** menu*

Description

- Setting of basic parameters, for instance setpoint or start/stop of system or individual pumps.
- Reading of selected setpoint and current setpoint.
- Button ⓘ for further information.
- Active buttons are on.

Alarm menu

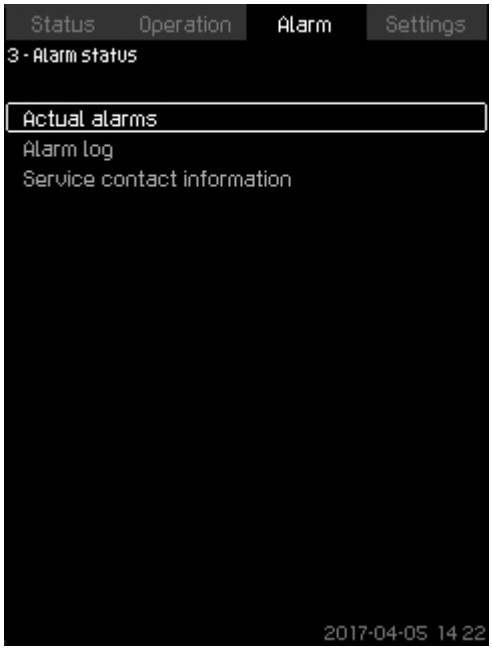

3_TM032291_003

***Alarm** menu*

Description

- Overview of current warnings and alarms in clear text with detailed information:
  - The cause of the fault.
  - The remedy for the fault.
  - Where the fault occurred: system, pump no. 1…
  - When the fault occurred (time and date).
  - When the fault disappeared (time and date).
  - Whom to contact for service.
- Alarm log with up to 24 warnings and alarms.
- Button ⓘ for further information.
- Active buttons are on.

Settings menu

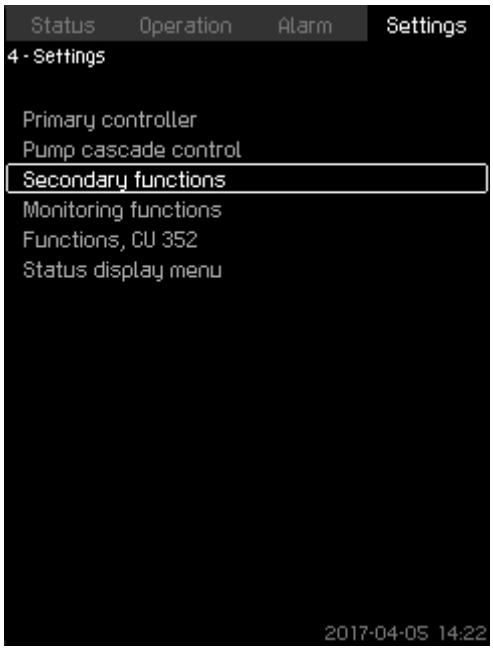

4_TM032294_004

***Settings** menu*

Description

- Various settings:
  - **External setpoint influence**
  - **Redundant primary sensor**
  - **Standby pumps**
  - **Stop function**
  - **Proportional pressure**
  - **Display language**
  - **Ethernet**, etc.
- Button ⓘ for further information.
- Active buttons are on.

Overview of functions

	Hydro MPC	
	-E	-S
Functions via the CU 352 control panel		
Constant-pressure control	●	● [8]
Proportional pressure	●	-
Automatic cascade control	●	●
Alternative setpoints	●	●
Redundant primary sensor [9]	●	●
Minimum changeover time	●	●
Number of starts per hour	●	●
Standby pumps	●	●
Forced pump changeover	●	●
Pump test run	●	●
Dry-running protection [9]	●	●
Stop function	●	- [10]
Password	●	●
Clock program	●	●
Pilot pump [9]	●	
Soft pressure build-up	●	●
Emergency run	●	●
Pump curve data	●	●
Flow estimation	●	●
Limit 1 and 2 exceeded	●	●
Pumps outside duty range	●	●
Log function	●	●
Specific energy calculation	● [11]	-
Setpoint ramp	●	●
Reduced operation	●	●
Communication		
Ethernet connection	●	●
Other bus protocols: PROFIBUS, LonWorks, Modbus, GRM, GSM, BACnet MS/TP, Industrial Ethernet via CIM modules. For further information, see section Optional equipment, Hydro MPC.	❍	❍
External GENIbus connection	❍	❍

8) The pressure will be almost constant between H_{set} and H_{stop}. For further information, see section Overview of control variants.

9) Hardware not supplied as standard, but the functionality is available in the controller.

10) Hydro MPC-S will have on/off control of all pumps. For further information, see figure On/off band in section Stop function.

11) Requires that a flowmeter is installed and connected.

● Standard.
❍ On request.
- Not available.

Related information

Overview of control variants
Stop function
Optional equipment, Hydro MPC

Description of selected functions

Constant-pressure control of E-system

Constant-pressure control ensures that the system delivers a constant pressure despite a change in consumption.

When taps are opened, water is drawn from the diaphragm tank, if installed. The pressure drops to a set cut-in pressure, and the first speed-controlled pump starts. The speed of the pump in operation is continuously increased to meet the demand. As the consumption rises, more pumps are cut in until the performance of the pumps in operation corresponds to the demand. During operation, CU 352 controls the speed of each pump individually according to known pump curve data downloaded into CU 352.

Furthermore, CU 352 regularly estimates whether pumps are to be cut in or out to ensure the best efficiency.

When the water consumption falls, pumps are cut out one by one to maintain the set outlet pressure.

Display language

4-5-1_TM038987_116

Display language

Via CU 352, you can select the language for the display.

Options

- **English**
- **Danish**
- **German**
- **French**
- **Italian**
- **Spanish**
- **Portuguese**
- **Greek**
- **Dutch**
- **Swedish**
- **Finnish**
- **Polish**
- **Russian**
- **Korean**
- **Chinese**
- **Japanese**
- **Czech**
- **Turkish**
- **Hungarian**
- **Bulgarian**
- **Croatian**
- **Latvian**
- **Lithuanian**
- **Romania**
- **Slovak**
- **Slovenian**
- **Serbian Latin**
- **US English**
- **Indonesian**
- **Malay**
- **Estonian**

Pump curve data

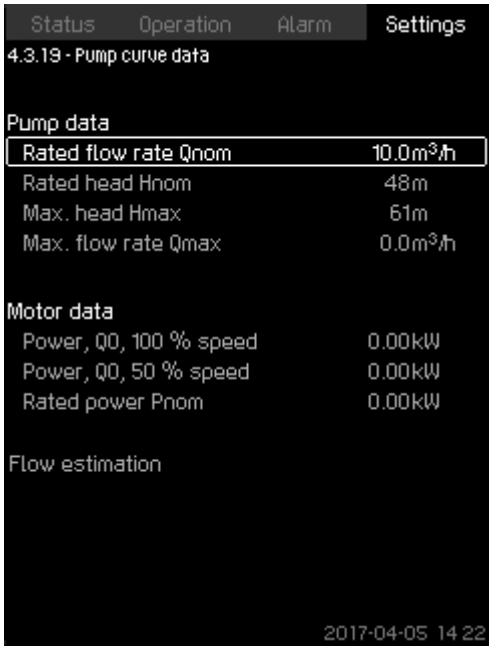

4-3-19_TM038975_104

Pump curve data

Pump curve data is loaded into the CU 352 controller on the Hydro MPC system at the factory.

The controller uses pump curve data along with inlet and outlet pressure information to analyse and determine the operating point of each pump. This data is used to optimise the performance and minimise energy consumption and provides protection from running pumps outside their duty range.

Redundant primary sensor

A redundant sensor can be installed as backup for the primary sensor to increase reliability and prevent stop of operation. The redundant primary sensor is at the same reference point as the primary sensor, that is, in the outlet manifold of the system.

The redundant primary sensor is available as a factory-fitted option.

Automatic cascade control

Cascade control ensures that the performance of the system is automatically adapted to consumption by switching pumps on or off. The system thus runs as energy-efficiently as possible with a constant pressure and a limited number of pumps.

Alternative setpoints

This function makes it possible to set up to six setpoints as alternatives to the primary setpoint. The setpoints can be set for closed loop and open loop. The performance of the system can thus be adapted to other consumption patterns.

Example

A system is used for irrigation of a hilly golf course.

Constant-pressure irrigation of golf course sections of different sizes and at different altitudes may require more than one setpoint.

For golf course sections at a higher altitude, a higher outlet pressure is required.

Log function

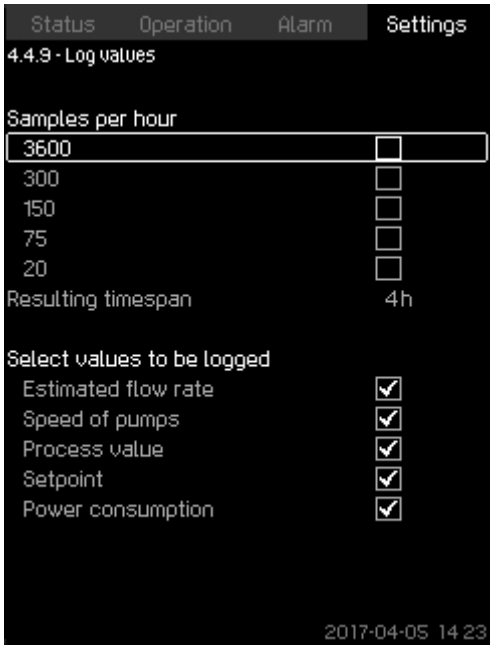

4-4-9_TM052973_181

Log values

The log function can monitor selected parameters. The data can be presented in the display or exported as a csv file via the built-in Ethernet connection.

Specific energy calculation

For MPC-E systems with a flowmeter connected, CU 352 can calculate and show the specific energy used. It is shown as two values, the actual value and the average value.

Number of starts per hour

This function limits the number of pump starts and stops per hour. It reduces noise emissions and improves the comfort of systems with mains-operated pumps.

Each time when a pump starts or stops, CU 352 calculates when the next pump is allowed to start or stop in order not to exceed the permissible number of starts per hour.

This function always allows pumps to be started to meet the requirement. However, pump stops can be delayed to avoid exceeding the permissible number of starts/stops per hour.

Standby pumps

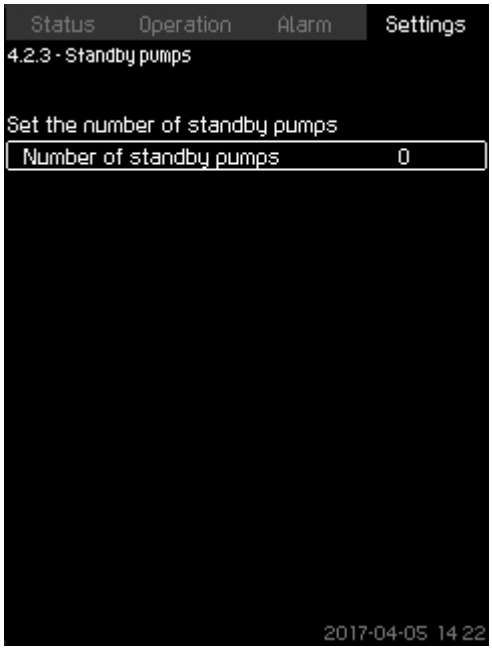

4-2-3_TM032366_075

Standby pumps

You can let one or more pumps function as standby pumps. A system with for instance four pumps, one having the status of standby pump, will run like a system with three pumps, as the maximum number of pumps in operation is the total number of pumps minus the number of standby pumps.

If a pump is stopped due to a fault, the standby pump is cut in. This function ensures that the system can maintain the rated performance even if one of the pumps is stopped due to a fault.

The status as standby pump alternates between all pumps of the same type, for instance electronically speed-controlled pumps.

Forced pump changeover

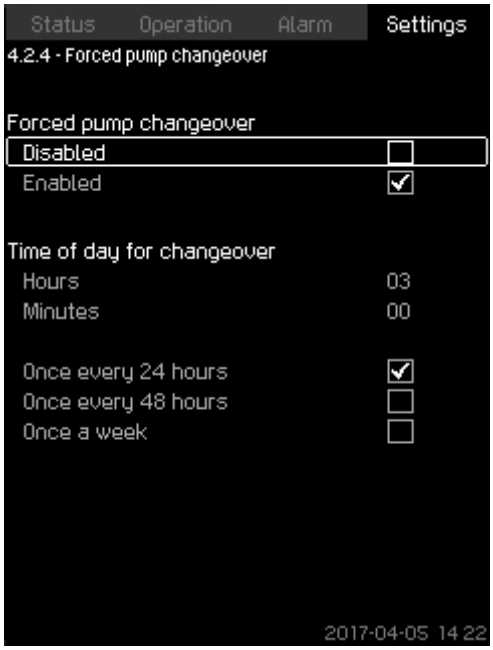

4-2-4_TM032365_058

Forced pump changeover

This function ensures that the pumps run for the same number of operating hours over time.

In certain applications, the required flow remains constant for long periods and does not require all pumps to run. In such situations, pump changeover does not take place naturally, and forced pump changeover may thus be required.

Once every 24 hours the controller checks if any pump in operation has been running continuously for the last 24 hours.

If this is the case, the pump with the largest number of operating hours stops and is replaced by the pump with the lowest number of operating hours.

Pump test run

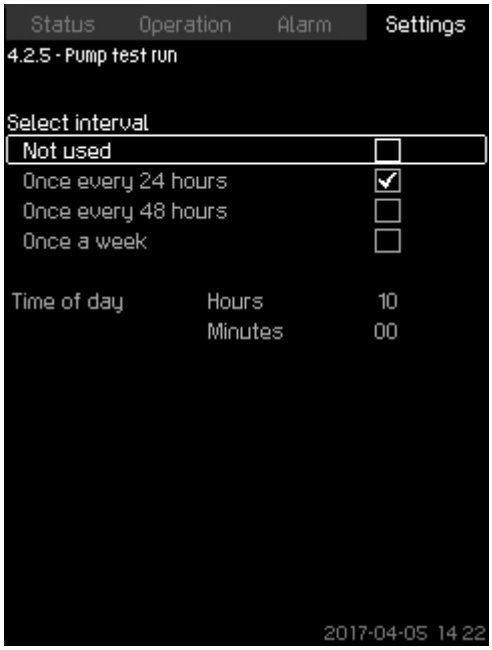

4-2-5_TM032364_057

Pump test run

This function is primarily used in connection with pumps that do not run every day.

Benefits:

- Pumps do not seize up during a long standstill due to deposits from the pumped liquid.
- The pumped liquid does not decay in the pump.
- Trapped air is removed from the pump.
- The pump starts automatically and runs for a short time.

Dry-running protection

This function is one of the most important ones, as dry running may damage bearings and shaft seals.

The inlet pressure of the system or the level in a tank, if any, on the inlet side is monitored. If the inlet pressure or the water level is too low, all pumps stop.

Level switches, pressure switches or analog sensors signalling water shortage at a set level can be used. Furthermore, you can set the system to be reset and restarted manually or automatically after a situation with water shortage.

Stop function

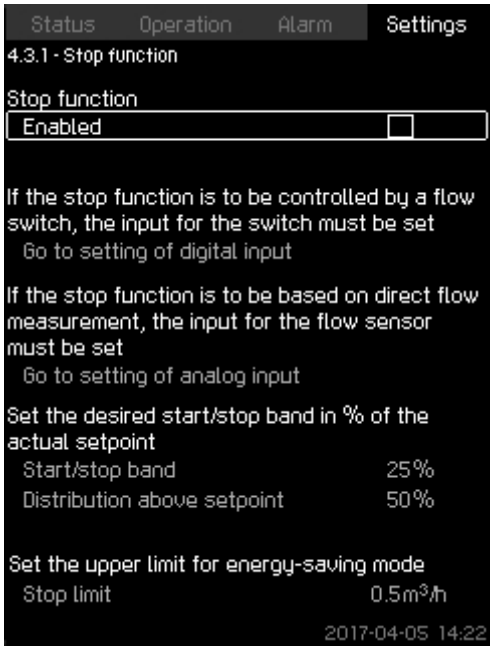

4-3-1_TM032355_102

Stop function

The stop function makes it possible to stop the last pump in operation if there is no or a very small consumption.

Purpose:

- Save energy.
- Prevent heating of shaft-seal faces due to increased mechanical friction as a result of reduced cooling by the pumped liquid.
- Prevent heating of the pumped liquid.

This function is only used in the Hydro MPC systems with variable-speed pumps.

Hydro MPC-S has on/off control of all pumps.

When the stop function is enabled, the operation of the system is continuously monitored to detect a low flow rate. If CU 352 detects no or a low flow rate (Q < Qmin), it changes from normal constant-pressure operation to on/off control of the last pump in operation.

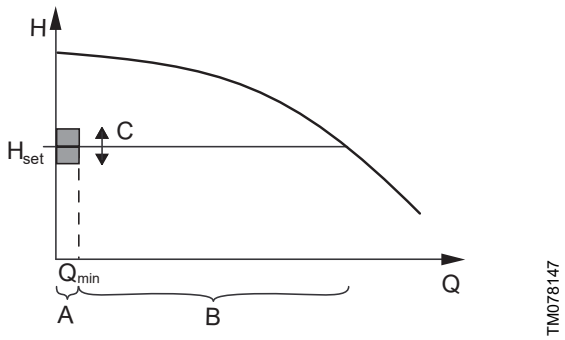

On/off band

Pos.	Description
A	On/off control
B	Normal operation
C	Start/stop band

As long as the flow rate is lower than Q_{min}, the pump runs in on/off operation. If the flow rate is increased to above Q_{min}, the pumps return to normal constant-pressure operation.

Via CU 352, you can set the system to operate as energy-efficiently as possible or with the highest level of comfort.

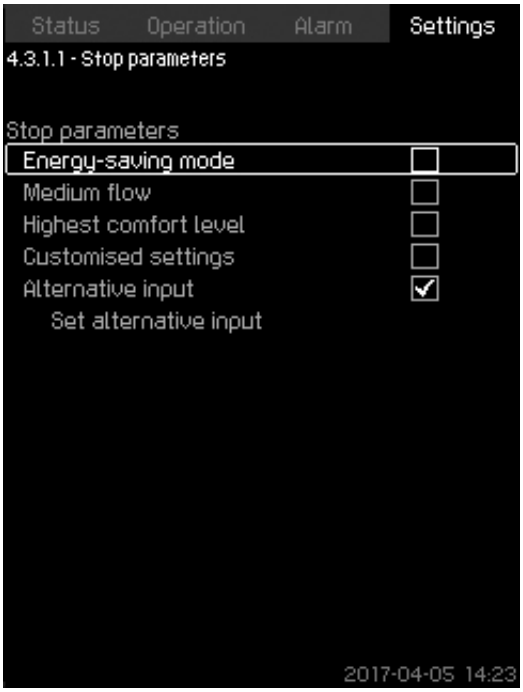

Stop parameters

Five stop parameters can be selected:

- **Energy-saving mode (factory setting)**
  If you want the highest energy-saving mode possible.
- **Medium flow**
  If you want a compromise between the highest energy-saving mode and the highest comfort level.
- **Highest comfort level**
  If you want the highest comfort level without too many pump starts or stops.
- **Customised settings**
  If you want to make your own settings.
- **Alternative input**
  If you select this function, you can define the stop flow on the basis of the system setpoint, total tank volume or precharge pressure.

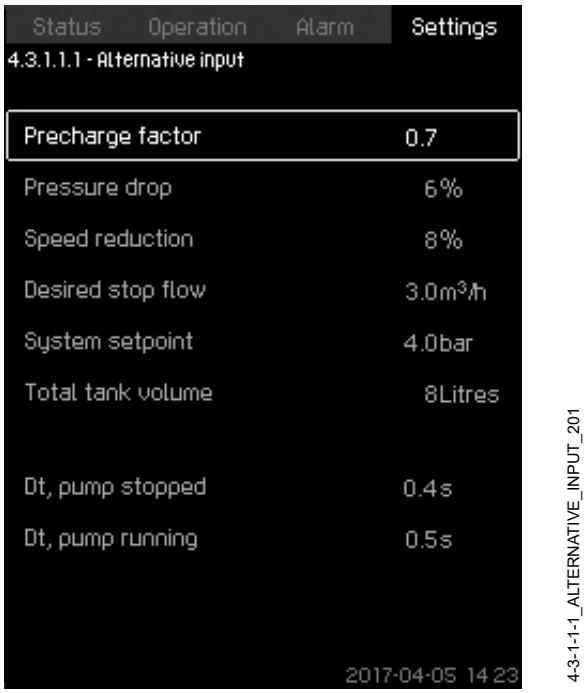

Alternative input

Setpoint ramp

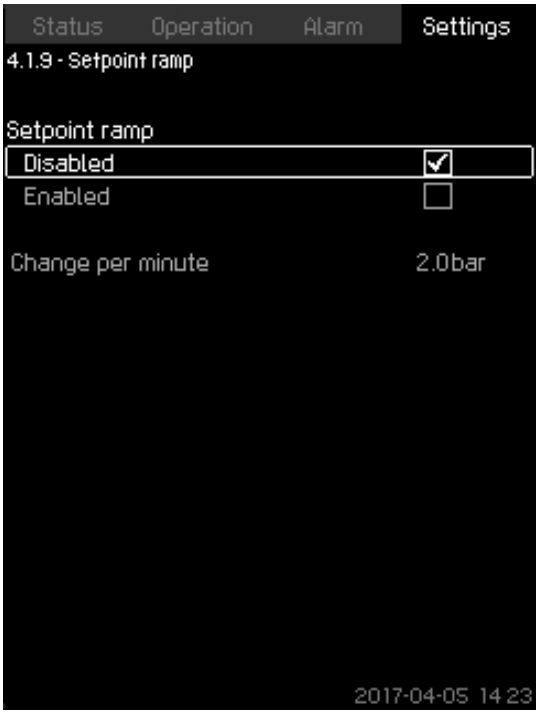

4-1-9_TM052969_174

Setpoint ramp

If this function is enabled, any setpoint change made via the controller, via clock program, when changing between alternative setpoints or via a SCADA system, will be made gradually over time. In this way, smooth setpoint changes can be made, thus causing no discomfort to the consumer.

Pilot pump

The pilot pump takes over the operation from the main pumps in periods when the consumption is so small that the stop function of the main pumps is activated.

Purpose:

- Reduce the necessary size of the diaphragm tank.
- Reduce the number of operating hours of the main pumps.

Password

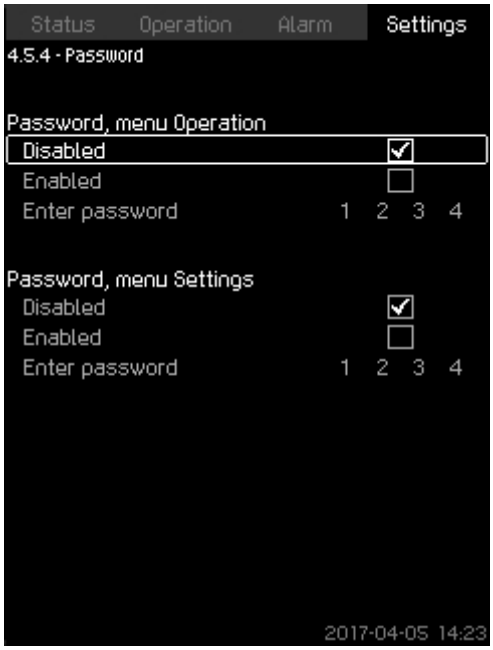

4-5-4_TM032899_115

Password

Passwords make it possible to limit the access to the **Operation** and **Settings** menus in the controller. If the access is limited, it is not possible to view or set any parameter in the menus.

Clock program

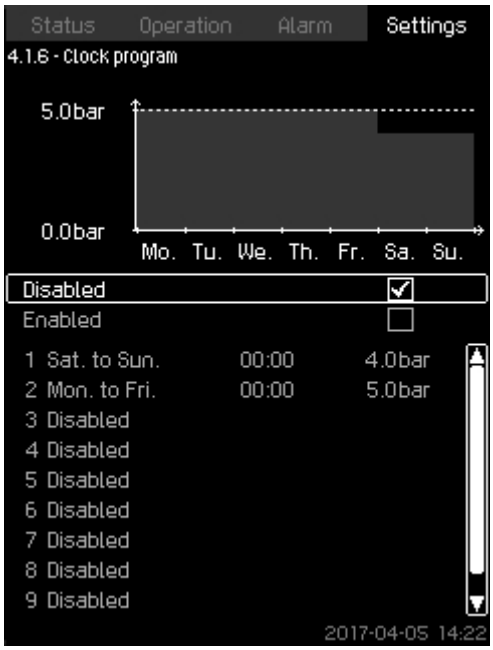

4-1-6_TM038990_129

Clock program

This function makes it possible to set up to ten events with specification of day and time for their activation or deactivation.

An example of application is sprinkling of golf courses at fixed times for the individual greens.

Proportional pressure

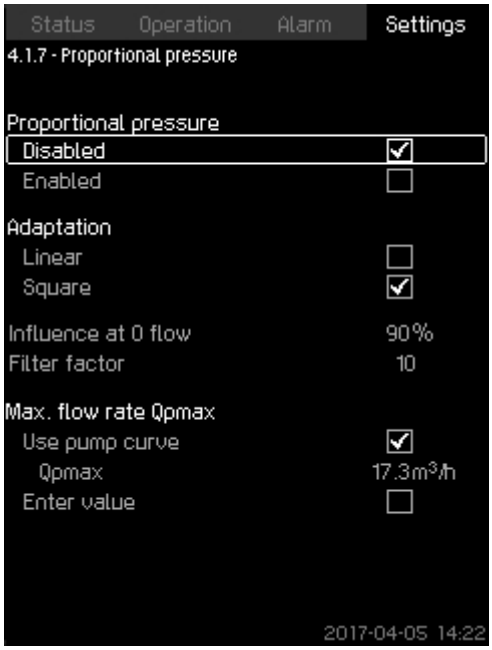

4-1-7_TM038960_130

Proportional pressure

This function can be used in applications with a large pipe system, for instance a village supplied with water from a pumping station or waterworks.

Purpose:

- Deliver the required water at all times.
- Compensate for friction loss.
- Keep energy consumption at a minimum.
- Ensure the highest comfort level at tapping points, etc.
- Minimise water loss from leaks.
- Reduce wear and tear on pipes.

In situations with high flow rates, the pressure loss in the pipe system is relatively high. To deliver a system pressure of 5 bar in such a situation, the outlet pressure of the system must be set to 6 bar if the pressure loss in the pipe system is 1 bar.

In a low-flow situation, the pressure loss in the pipe system may only be 0.2 bar. Here the system pressure would be 5.8 bar if the setpoint was fixed to 6 bar. That 0.8 bar is too high compared with the peak situation above.

To compensate for this excessive system pressure, the proportional-pressure function of CU 352 automatically adapts the setpoint to the actual flow rate. The adaptation can be linear or square. Such an automatic adaptation offers you large energy savings and optimum comfort at the tapping point.

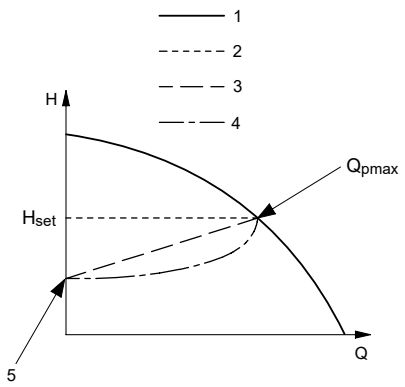

TM038524

Proportional-pressure control

Pos.	Description
1	Pump curve
2	Setpoint
3	Resultant setpoint, linear
4	Resultant setpoint, square
5	Starting point of proportional-pressure control (influence at 0 flow = x % of H_{set})

Qp_{max} is the expected maximum flow rate. It can either be set to the maximum flow the system can deliver at a determined setpoint, or a value can be entered manually based on a known or assessed maximum flow rate.

Example

Influence at 0 flow (Q0) = pressure loss in supply pipe x 100 / setpoint.

Influence at 0 flow (Q0) = 1 bar x 100 / 6 bar = 16.67 %.

Setpoint at Q_{min} with proportional-pressure control:

6 bar - (6 bar x 0.1667) = 5 bar.

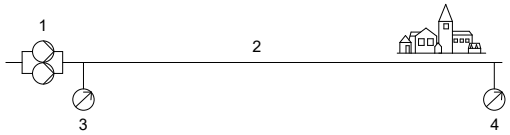

TM081526

Without proportional-pressure control

Pos.	Description
1	Pumping station
2	Pressure loss Q_{max} : 1 bar Q_{min} : 0.2 bar
3	Setpoint: 6 bar
4	System pressure Q_{max}: 5 bar Q_{min}: 5.8 bar

Soft pressure build-up

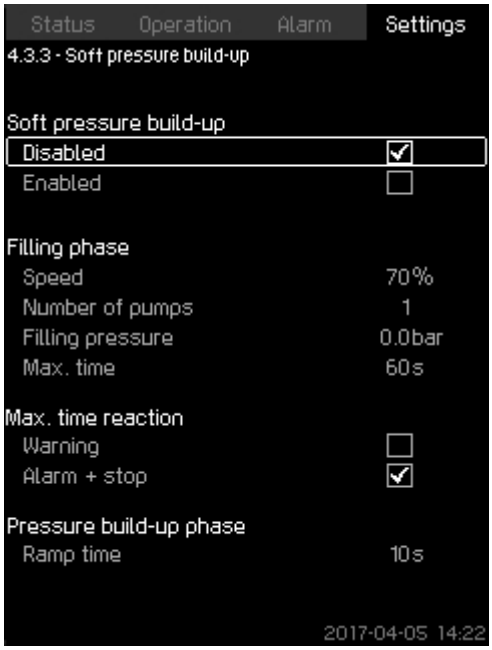

4-3-3_TM038970_133

Soft pressure build-up

The function is typically used in pressure-boosting applications and ensures a smooth startup of systems with for instance empty pipes.

Startup takes place in two phases:

- **Filling phase** (1): The pipes are slowly filled with water. When the pressure sensor of the system detects that the pipes have been filled, Phase 2 begins.
- **Pressure build-up phase** (2): The system pressure is increased until the setpoint (SP) is reached. The pressure buildup takes place over a ramp time. If SP is not reached within a given time, a warning or an alarm can be given, and the pumps can be stopped at the same time.

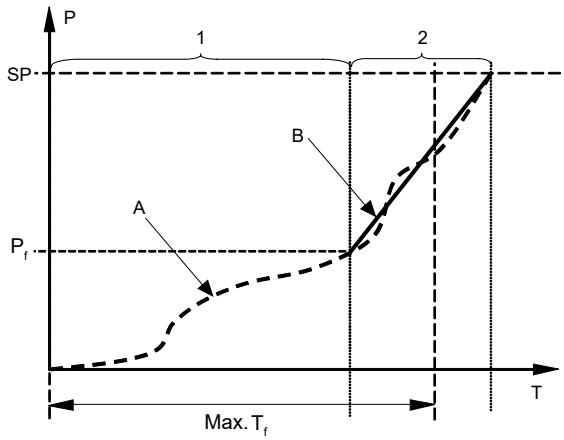

TM078698

Filling and pressure buildup phases

P: Pressure	T: Time [second]
P_f: Filling pressure	T_f: Filling time

Pos.	Description
1	**Filling phase**: constant-curve operation
2	**Pressure build-up phase**: constant-pressure operation
A	Actual value
B	Setpoint ramp-up

Emergency run

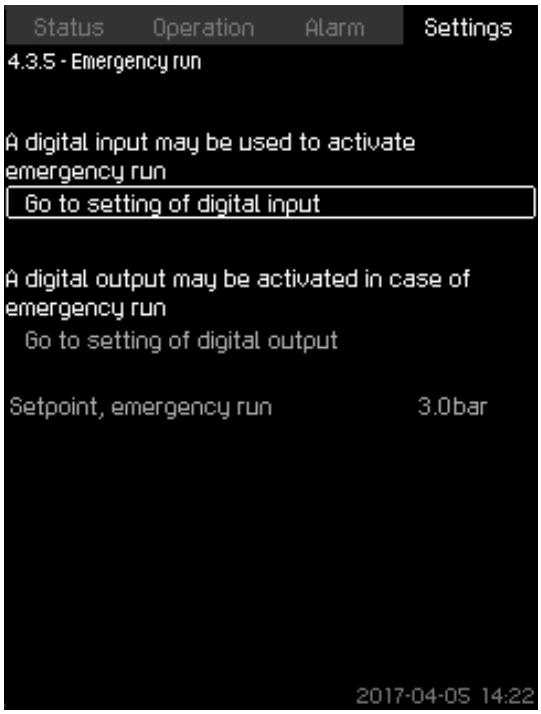

4-3-5_TM038971_132

Emergency run

This function is especially suited for important systems where the operation must not be interrupted. The function keeps all pumps running regardless of warnings or alarms. The pumps run according to a setpoint set specifically for this function.

Reduced operation

This function makes it possible to reduce the operation of the system via a digital input. The function is used in applications where the mains power is sometimes switched to generator power. To avoid using more power than the generator can deliver, the system can be derated via a digital input.

Status display menu

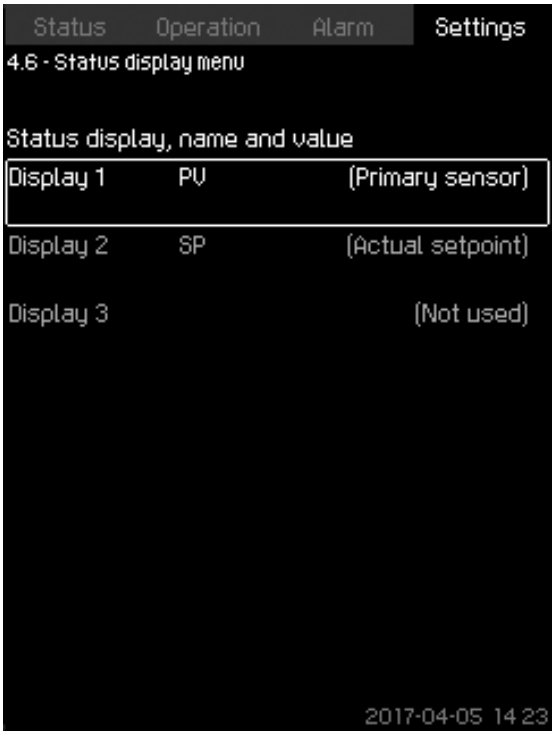

4-6_STATUS_DISPLAY_MENU_196

Status display menu

The main status menu can show up to three status values.

In this menu, you can define each status value and a name for the value.

Examples:

- PV: process value
- SP: setpoint
- Q: flow rate.

Setting range

1. Name of each display value.
2. Selection of displays 1 to 3.

Setting the display value

1. Go to the Setting menu.
2. Select **Status display menu**.
3. Mark the display and press [ok].
4. Enter a name for display value.
5. Define the function of the display.

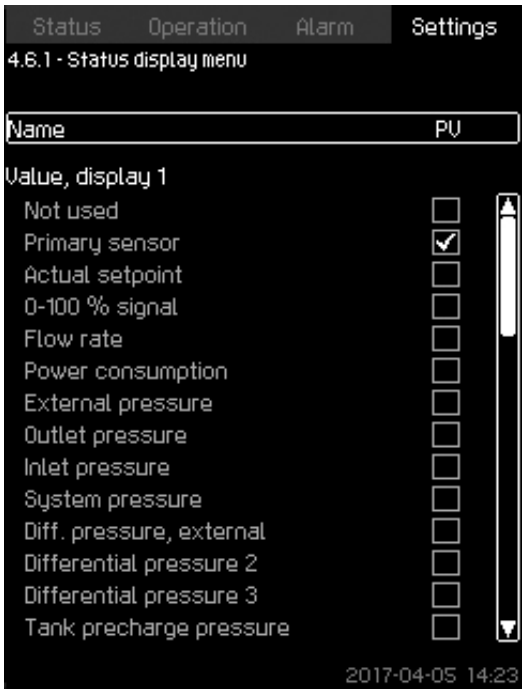

4-6-1_STATUS_DISPLAY_MENU_197

Status display menu

Factory settings

Display 1: PV, primary sensor.

Display 2: SP, actual setpoint.

Non-return valve

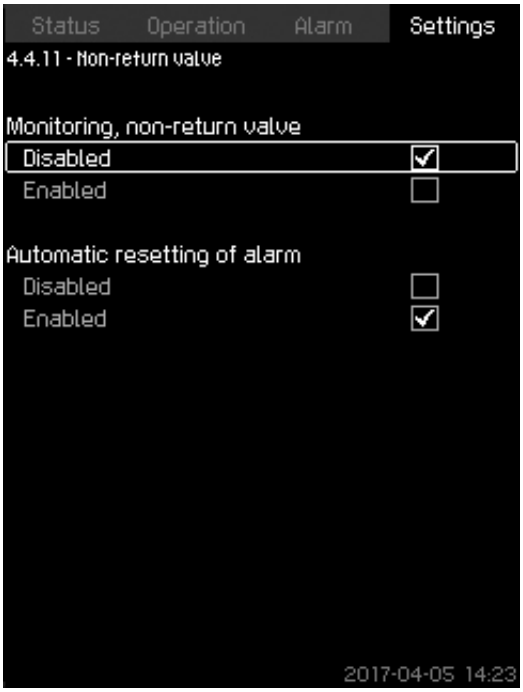

4-4-11_NON-RETURN_VALVE_202

Non-return valve

The function enables CU 352 to detect if a **Non-return valve** is leaking or faulty. A small leakage after five accumulated incidents will result in a warning. A faulty NRV will instantly result in an alarm and pump stop. In this case, the motor is not able to overcome the backflow through the pump with the faulty NRV.

The function is only valid for a MPC-E system with MGE motors model G, H, I or J.

Multisensor settings

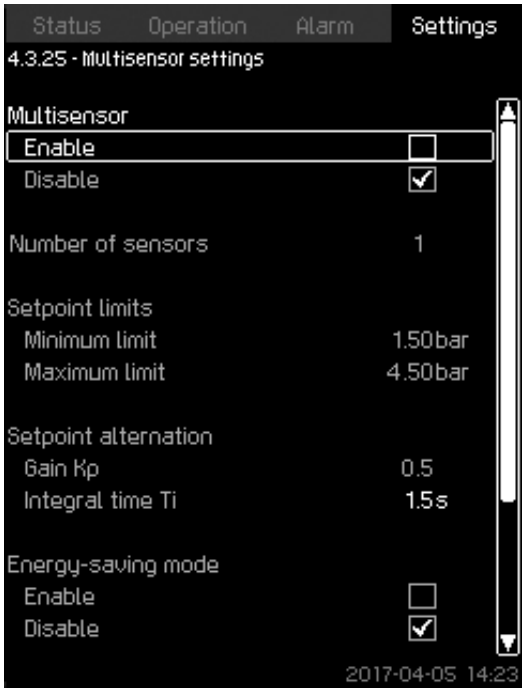

4-3-25_MULTISENSOR_186

Multisensor settings

The function is designed for controlling up to six different zones in a HVAC system with a defined differential-pressure band. If one of the **Multisensor** signals are outside the specific sensor limits (minimum or maximum), the function will influence the setpoint (SP) up or down to ensure that the specific sensor or zone is kept within its pressure band.

You can adjust the reaction of the setpoint influence by the means of dedicated **Setpoint alternation**, Kp and Ti values.

In case more sensors are either under or above their limits, you can set a priority between the sensors. Furthermore, the system can optimise the actual setpoint if **Energy-saving mode** is activated by reducing the actual setpoint until the minimum limit of one of the multisensors is reached.

If the multisensor function is enabled, it will have higher priority and the following programs will be overruled:

- **Clock program**
- **Proportional pressure**
- **Alternative setpoints**
- **External setpoint influence**
- **Setpoint ramp**.

Counter inputs

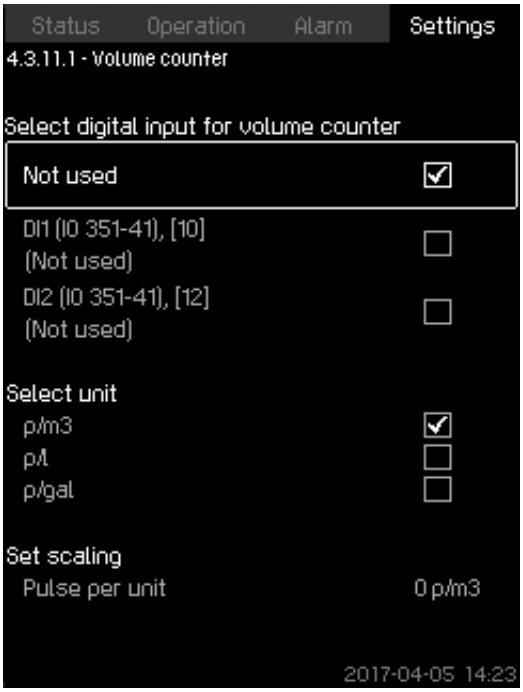

4-3-11-1_VOLUME_COUNTER_195

Volume counter

You can set CU 352 to accumulate a pumped volume from a digital water meter.

This menu only appears if an IO 351B module is connected to CU 352.

5. Installation

Mechanical installation

Location

Install the system in a well-ventilated room to ensure sufficient cooling of the controller and pumps.

The system is only designed for indoor installation. Do not expose the product to direct sunlight.

Place the system with a 1 m (3 ft) clearance on all sides for inspection and removal.

Pipes

Arrows on the pump base show the direction of flow of water through the pump.

The pipes connected to the system must be of adequate size.

Connect the pipes to the manifolds of the system. Either end can be used. Apply sealing compound to the unused end of the manifold, and fit the screw cap. For manifolds with flanges, fit a blanking flange with gasket.

To optimise operation and minimise noise and vibration, it may be necessary to consider vibration dampening of the system.

Noise and vibration are generated by the rotations in motor and pump and by the flow in pipes and fittings. The effect on the environment is subjective and depends on correct installation and the state of the other parts of the system.

If systems are installed in blocks of flats or the first consumer on the line is close to the system, we recommend that you fit expansion joints on the inlet and outlet pipes to prevent vibration from being transmitted through the pipes.

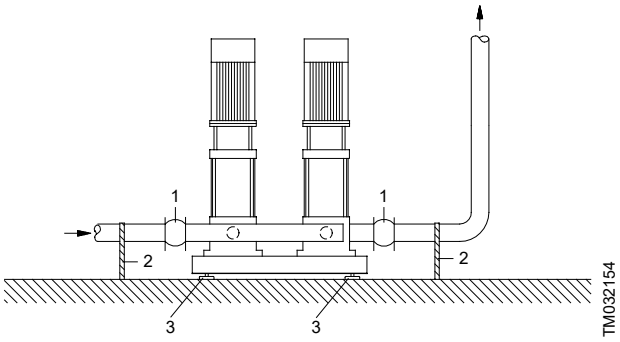

Example showing the position of expansion joints, pipe supports and machine shoes

Pos.	Description
1	Expansion joint
2	Pipe support (and good location for system isolation valve)
3	Vibration damper (machine shoe)

Expansion joints, pipe supports and machine shoes shown in the figure above are not included in a standard system.

Foundation

Position the system on an even and solid surface, such as a concrete floor or foundation. If the system is not fitted with vibration dampers, bolt it to the floor or foundation.

The weight of a concrete foundation must be 1.5 times the weight of the system.

Vibration dampers

To prevent the transmission of vibrations to buildings, we recommend that you isolate the system foundation from building parts by means of vibration dampers.

The right damper varies from installation to installation, and a wrong damper may increase the vibration level. Vibration dampers must therefore be sized by the supplier. If the system is installed on a base frame with vibration dampers, always fit expansion joints on the manifolds. This is important to prevent the system from "hanging" in the pipes.

Expansion joints

Fit expansion joints for these reasons:

- to absorb expansions or contractions in the pipes caused by changing liquid temperature
- to reduce mechanical strains in connection with pressure surges in the pipes
- to isolate mechanical structure-borne noise in the pipes (only rubber bellows expansion joints).

Do not install expansion joints to compensate for inaccuracies in the pipes such as centre displacement of flanges.

Anchor the pipes so that they do not stress the expansion joints, manifolds and the pump. Follow the supplier's instructions and pass them on to advisers or pipe installers.

- Fit expansion joints at a distance of minimum 1 to 1 1/2 times the nominal flange diameter from the manifold on the inlet as well as on the outlet side. This prevents the development of turbulence in the expansion joints, resulting in better inlet conditions and a minimum pressure loss on the pressure side.

Examples of rubber bellows expansion joints without limiting rods

Examples of rubber bellows expansion joints with limiting rods

Expansion joints with limiting rods can be used to minimise the forces caused by the expansion joints. We always recommend that you use expansion joints with limiting rods for flanges larger than DN 100.

Anchor the pipes so that they do not stress the expansion joints and the pump. Follow the supplier’s instructions and pass them on to advisers or pipe installers.

Electrical installation

The electrical installation must be carried out by authorised personnel in accordance with local regulations.

- The electrical installation of the system must be carried out in accordance with enclosure class IP54.
- Check that the supply voltage and frequency correspond to the values stated on the nameplate. Contact Grundfos if you have special voltage requirements.
- Make sure that the conductor cross-section meets the specifications in the wiring diagram.

The mains connection must be carried out as shown in the wiring diagram.

Hygiene

Grundfos systems are functionally tested and may therefore contain small amounts of residual water. Before using the system, it must be rinsed or flushed thoroughly. This also applies if the system has not been used for a longer period.

Rinsing and flushing must always be done in accordance with local regulations and practices. Contaminated drinking water can endanger health.

6. Sizing

When sizing a system, take the following into account:

- The performance of the system must meet the highest possible demand both in terms of flow rate and pressure.
- The system must not be oversized. This is important in relation to installation and operating costs.

You can size the systems via Grundfos Product Center or this data booklet.

Sizing in Grundfos Product Center (recommended)

We recommend that you size your system in Grundfos Product Center, which is a selection program offered by Grundfos. For further information, see section Grundfos Product Center.

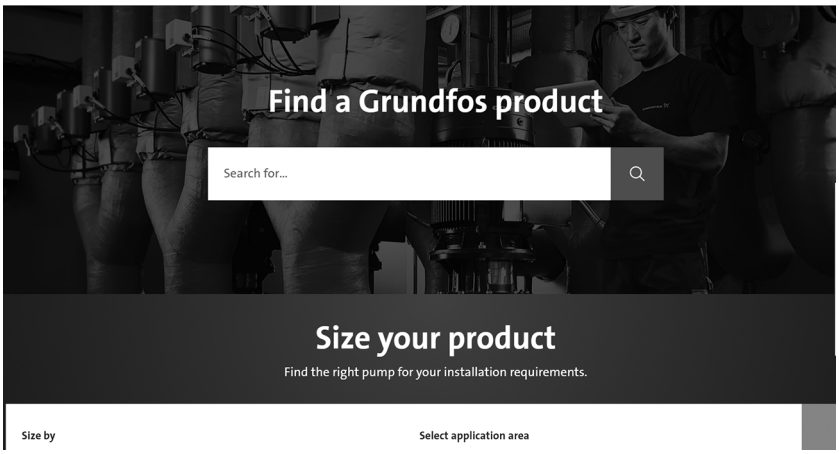

TM083490

Sizing in Grundfos Product Center

Sizing via this data booklet

There are seven steps:

1. maximum flow requirement
2. required outlet pressure
3. system layout
4. consumption profile and load profile
5. inlet pressure
6. system selection
7. accessories.

Related information

15. Grundfos Product Center

Maximum flow requirement

The total consumption and the required maximum flow rate depend on the application in question. The maximum flow requirement can be calculated by means of the table below which is based on statistical data.

Consumer	Unit	Q_{year}	Consumption period	Q_{day}	fd [12]	$Q(m)_{day}$	ft [13]	Maximum flow rate
		[m^3/year]	[days/year]	[m^3/day]		[m^3/day]		[m^3/h]
Residence building	Residence (2.5 persons)	183	365	0.5	1.3	0.65	1.7	0.046
Office building	Employee	25	250	0.1	1.2	0.12	3.6	0.018
Shopping centre	Employee	25	300	0.08	1.2	0.1	4.3	0.018
Supermarket	Employee	80	300	0.27	1.5	0.4	3.0	0.05
Hotel	Bed	180	365	0.5	1.5	0.75	4.0	0.125
Hospital	Bed	300	365	0.8	1.2	1.0	3.0	0.12
School	Pupil	8	200	0.04	1.3	0.065	2.5	0.007

12) Maximum consumption factor, day

13) Maximum consumption factor, hour

Example: Hotel with 540 beds

Number of beds:	n
Total annual consumption:	Q_{year} x n
Consumption period:	d
Average consumption per day:	(Q_{year} x n) / d
Maximum consumption per day:	$Q_{(m)day} = f_d \times Q_{day}$
Maximum flow requirement per hour:	Q_{max} = maximum flow rate/hour x number of beds.

Calculation

n	=	540 beds.
Q_{year} x n	=	180 x 540 = 97,200 m^3/year.
d	=	365 days/year.
(Q_{year} x n)/d	=	97,200/365 = 266.3 m^3/day.
$Q(m)_{day}$	=	$f_d \times Q_{day}$ = 1.5 x 266.3 = 399.4 m^3/day.
Q_{max}	=	Maximum flow rate/hour x number of beds = 0.125 x 540 = 67.5 m^3/h.

Note that the example above is based on Danish legislation DS442/1989 Code of Practice for common water-works. Calculation of water flow may vary from country to country depending on national guidelines and legislation.

Required outlet pressure

The required outlet pressure of the system can be calculated with the following equation:

p_{set}	=	$p_{tap(min)} + p_f + (h_{max}/10.2)$
p_{boost}	=	$p_{set} - p_{in(min)}$

Key

p_{set}	=	Required outlet pressure in bar
$p_{tap(min)}$	=	Required minimum pressure at the highest tapping point in bar
p_f	=	Total pipe friction loss in bar
h_{max}	=	Height from system outlet port to highest tapping point in metres
$p_{in(min)}$	=	Minimum inlet pressure in bar
p_{boost}	=	Required boost in bar

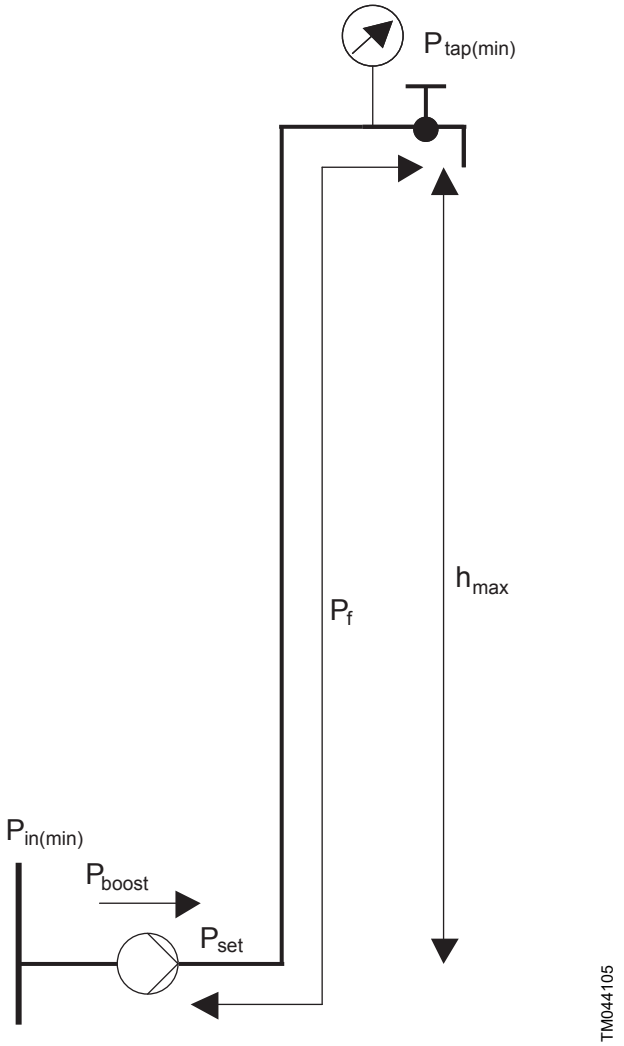

Calculation of required outlet pressure

Example calculation

$p_{tap(min)}$	=	2 bar
p_f	=	1.2 bar
h_{max}	=	41.5 m
$p_{in(min)}$	=	2 bar
p_{set}	=	2 + 1.2 + (41.5/10.2) = 7.3 bar
p_{boost}	=	7.3 - 2 = 5.3 bar

System layout

- Direct boosting

Example: The system is connected to water mains designed to distribute water from one place to another.

- Break tank

Example: The system is connected to a break tank installed before the system.

- Pressure boosting in zones

Example: A high-rise building or a hilly landscape where the water supply system is divided into zones.

- Roof tank

Example: The system distributes water to a roof tank on top of a high-rise building.

Consumption profile and load profile

The consumption pattern of the installation can be illustrated as a 24-hour consumption profile and a load profile.

24-hour consumption profile

The 24-hour consumption profile is the relation between the time of the day and the flow rate.

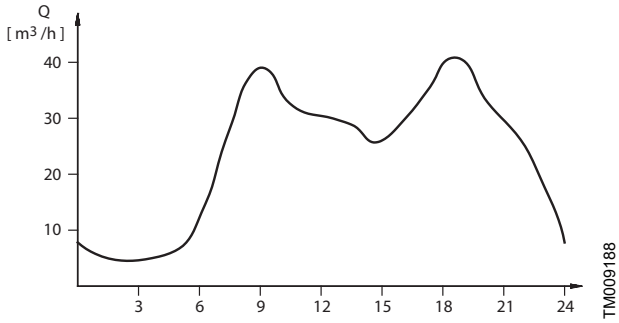

Example of a 24-hour consumption profile

If the consumption is variable and optimum comfort is required, use pumps with continuously variable speed.

Load profile

You can make the load profile when the 24-hour consumption profile has been determined.

The load profile gives an overview of how many per cent per day the system operates at a specific flow rate.

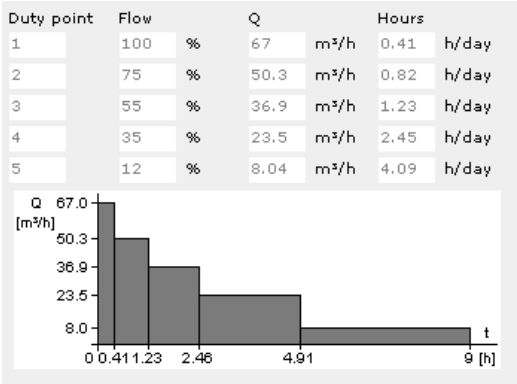

Duty point	Flow		Q		Hours	
1	100	%	67	m³/h	0.41	h/day
2	75	%	50.3	m³/h	0.82	h/day
3	55	%	36.9	m³/h	1.23	h/day
4	35	%	23.5	m³/h	2.45	h/day
5	12	%	8.04	m³/h	4.09	h/day

Load profile

Examples of typical 24-hour consumption profiles and their load profiles:

Water supply	Industry	Irrigation
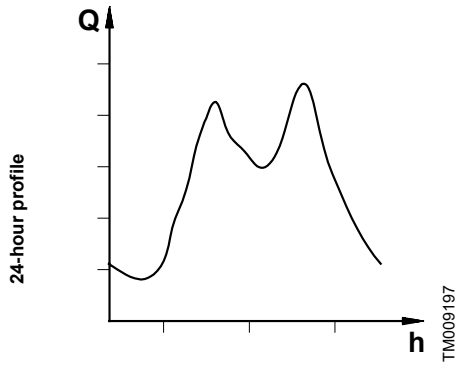	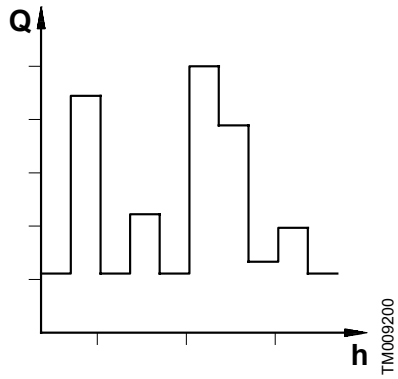	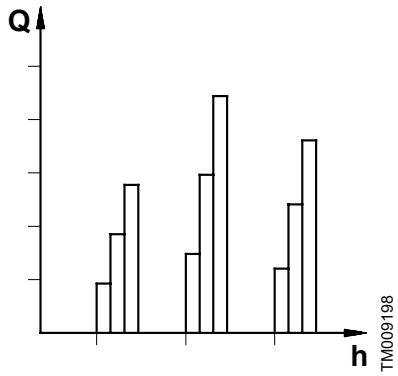
Flow rate: Highly variable **Pressure:** Constant	**Flow rate:** Highly variable with sudden changes **Pressure:** Constant	**Flow rate:** Constant and known **Pressure:** Constant
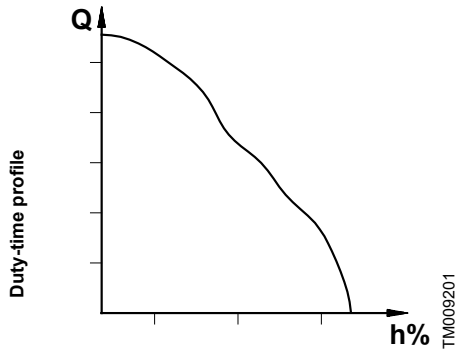	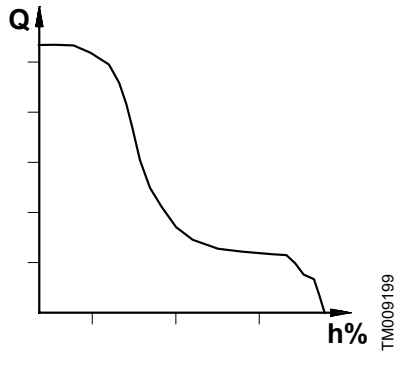	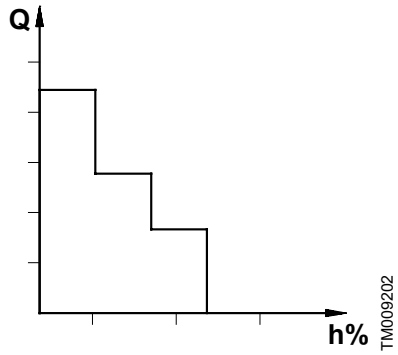
Consumption is highly variable. Continuously variable speed control of the pumps is recommended.	Consumption is highly variable with sudden changes. Continuously variable speed control of the pumps is recommended.	Variations in consumption are regular, yet known. Simple control is recommended.

Inlet pressure

If there is a positive inlet pressure, take the inlet pressure into consideration to ensure safe and energy optimal operation.

Ensure that the system maximum head and the inlet pressure do not exceed the PN rating for the system.

System selection

Select the system on the basis of these factors:

- maximum flow requirement
- required outlet pressure
- load profile
- number of pumps required
- possible standby pumps.

Accessories

When you have selected the optimum Hydro MPC system, consider whether you require any of the accessories mentioned below.

Dry-running protection

Every system must be protected against dry running.

The inlet conditions determine the type of dry-running protection:

- If the system draws water from a tank or a well, select a level switch or an electrode relay for dry-running protection.
- If the system has an inlet pressure, select a pressure transmitter or a pressure switch for dry-running protection.

Pilot pump

If a pilot pump is selected, size it according to the size of the main pumps in the system. The pilot pump should not be smaller than 1/5 of the flow of a main pump at the desired setpoint.

Diaphragm tank

The need for a diaphragm tank is estimated on the basis of the following guidelines:

- Due to the stop function, all Hydro MPC systems in buildings must be equipped with a diaphragm tank.
- Normally, the Hydro MPC systems in water-supply applications require no diaphragm tank, as miles of piping partly hold the necessary capacity, partly have the elasticity to give sufficient capacity.

To avoid the risk of water hammer, a diaphragm tank may be necessary.

- Estimate the need for a diaphragm tank for the Hydro MPC systems in industrial applications from situation to situation on the basis of the individual factors on site.

If the Hydro MPC system includes pilot pumps, the diaphragm tank is to be sized according to the capacity of this pump.

The tank consists of a bladder usually made of rubber. The water is contained in the bladder and does not come in direct contact with air in the tank. The bladder holding the water expands into the pressurized air space in the tank as it is filled. As water is used from the system, the bladder collapses until the water is almost emptied before the minimum pressure is reached, activating the pump system. The tank is pressurized at the factory, typically around 1.5 bar, but the pressure must be adjusted according to the setpoint using the air valve located near the top of the tank without any system pressure on the tank inlet.

- In S-systems, 0.9 x start pressure.
- In E-systems, 0.7 x setpoint.

For further information about optional equipment and accessories, see sections Optional equipment, Hydro MPC and Accessories.

Recommended tank size V_0 can be calculated from the following equations:

Hydro MPC-E and -F

$$V_0 = \frac{K_Q \times Q \times (p_{set} + 1)^2 \times \left(\frac{3600}{N} - 10\right)}{3.6 \times (k_f \times P_{set} + 1) \times k_H \times P_{set}}$$

Hydro MPC-S

$$V_0 = \frac{1000 \times Q \times (P_{set} + 1) \times (k_H \times P_{set} + P_{set} + 1)}{4 \times N \times (k_f \times P_{set} + 1) \times k_H \times P_{set}}$$

Symbol	Description
V_0	Tank volume
k_Q	The ratio between rated flow rate of the smallest pump in the system Q_{nom} and the flow rate Q_{min} at which the pump is changed to on/off operation $k_Q = Q_{min}/Q_{nom}$ It is only used in E-system where we have speed regulated pumps and can be set to 2-10 % depending on the pump size.
Q	Nominal flow rate of the smallest pump in the system
P_{set}	Setpoint of the system
k_H	The ratio between the on/off band ΔH and the setpoint P_{set}, $k_H = \Delta H/P_{set}$
k_f	The ratio between tank precharge pressure P_0 and the setpoint P_{set} $k_f = P_0/P_{set}$ 0.9 for Hydro MPC-S 0.7 for Hydro MPC-E and -F
N	Maximum numbers of start/stop per hour which depends on the motor type or size and the application, in systems with E-motors it is allowed to have up to 200 pr hour. All prefab MPC-E- systems delivered with tanks are calculated with this value.

Hydro MPC-E and -F

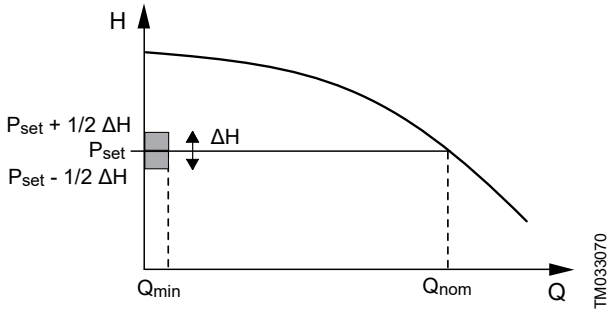

Hydro MPC-S

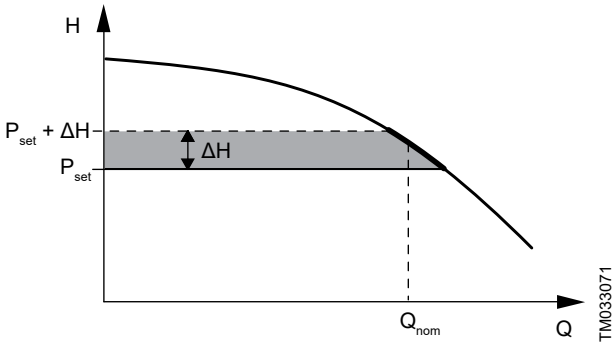

The tank values are based on the following data:

Example of Hydro MPC-E and -S with CRE, CRIE 20

Symbol	Hydro MPC-E	Hydro MPC-S
Q [m^3/h]	10	10
k_Q	6 %	-
k_H	20 %	25 %
P_{set} [bar]	4	4
N [h^{-1}]	200	100
Result		
V_0 [litres]	11.72	163
Selected tank	12	180
ΔH [bar]	0.8	1
P_0 [bar]	2.8	3.6

For further information, see the document below. The document is also available on Grundfos Product Center.

Title	QR code	Link	Publication number
Tank calculation in E systems		*http://net.grundfos.com/qr/i/92845021*	92845021

Related information

Optional equipment, Hydro MPC

13. Accessories

Understanding the curve charts

The x-axis showing the flow rate (Q) in m^3/h is common to all the curves; the y-axis showing the head (H) in metres has been adapted to the individual pump type.

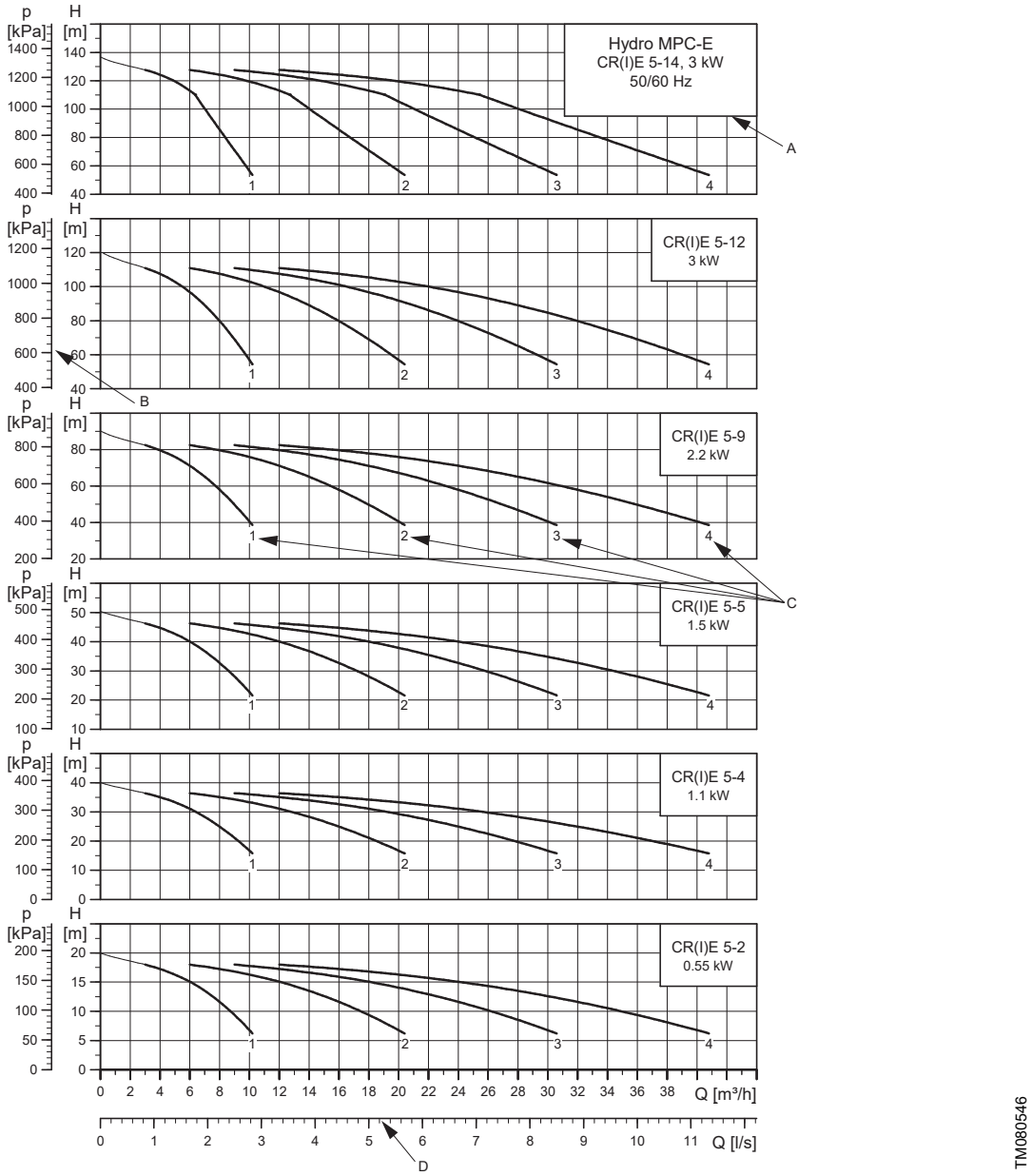

Pos.	Description
A	Specification of system, pump type, frequency and the standard to which the QH curves correspond.
B	The y-axis is adapted to the individual pump type.
C	Specification of system performance based on the number of pumps in operation: • 1: one pump in operation • 2: two pumps in operation • 3: three pumps in operation • 4: four pumps in operation.
D	The x-axis is common to all pump types.

Example: How to select a system

- A flow rate of 67.5 m^3/h is required.
- A head of 73 metres is required.

Draw a vertical line from the required flow rate.
Draw a horizontal line from the required head.
The intersection of the two lines gives the number of pumps required for the system (three CRE, CRIE 20-7).
The pump type best meeting this specification is found by means of the y-axis, for instance three CRE, CRIE 20-7.
Select only systems with performance ranges within the hatched area in the example.

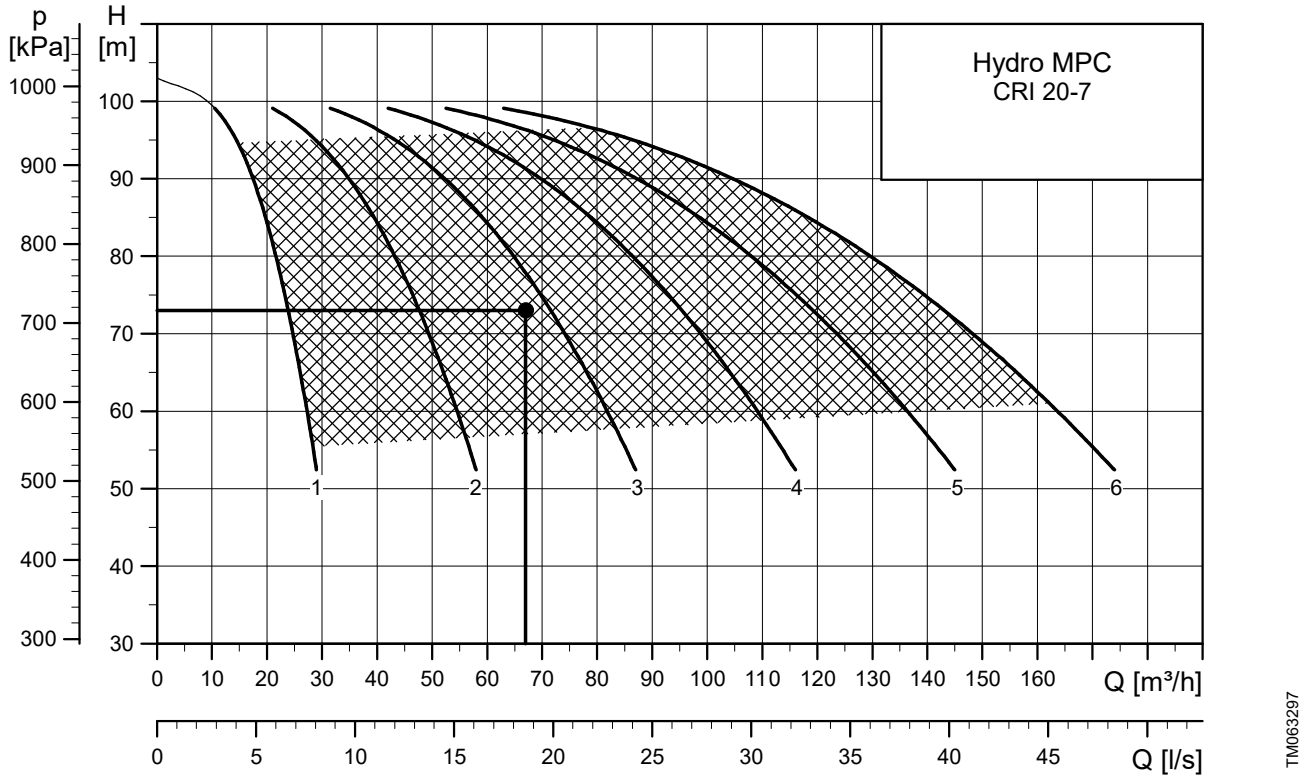

7. Curve conditions

How to read the curve charts

The guidelines below apply to the curves on the following pages:

- Measurements have been made with airless water at a temperature of 20 °C (68 °F).
- The curves apply to a kinematic viscosity: υ = 1 mm^2/s (1 cSt).
- The QH curves apply to fixed speeds of 2900 min^{-1} at 50 Hz and 3480 min^{-1} at 60 Hz.

  In most cases, the actual speed deviates from the above-mentioned speeds. For realistic curves, refer to Grundfos Product Center where the pump curves include the characteristics of the selected motor and therefore show curves at actual speeds. In Grundfos Product Center, you can also adjust the curves depending on the density and viscosity.

- The conversion between head H [m] ([ft]) and pressure P [kPa] ([psi]) applies to a specific weight equal to 8.3 lb/gal, water density of ρ = 1000 kg/m^3.

8. Curve charts, Hydro MPC-E/-S, 50 Hz

Hydro MPC-E/-S with CR, CRI 3

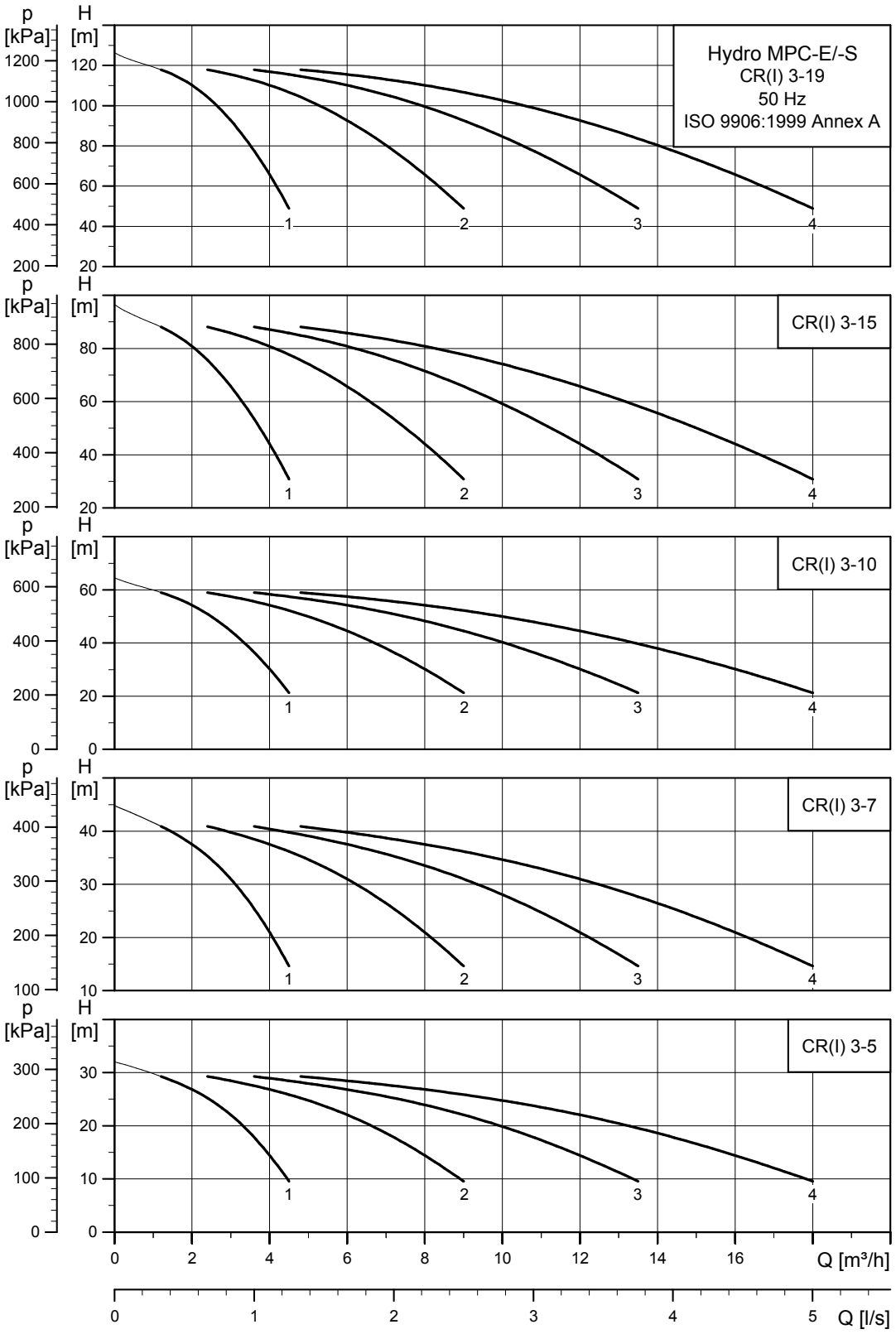

TM062936

Hydro MPC-E/-S with CR, CRI 5

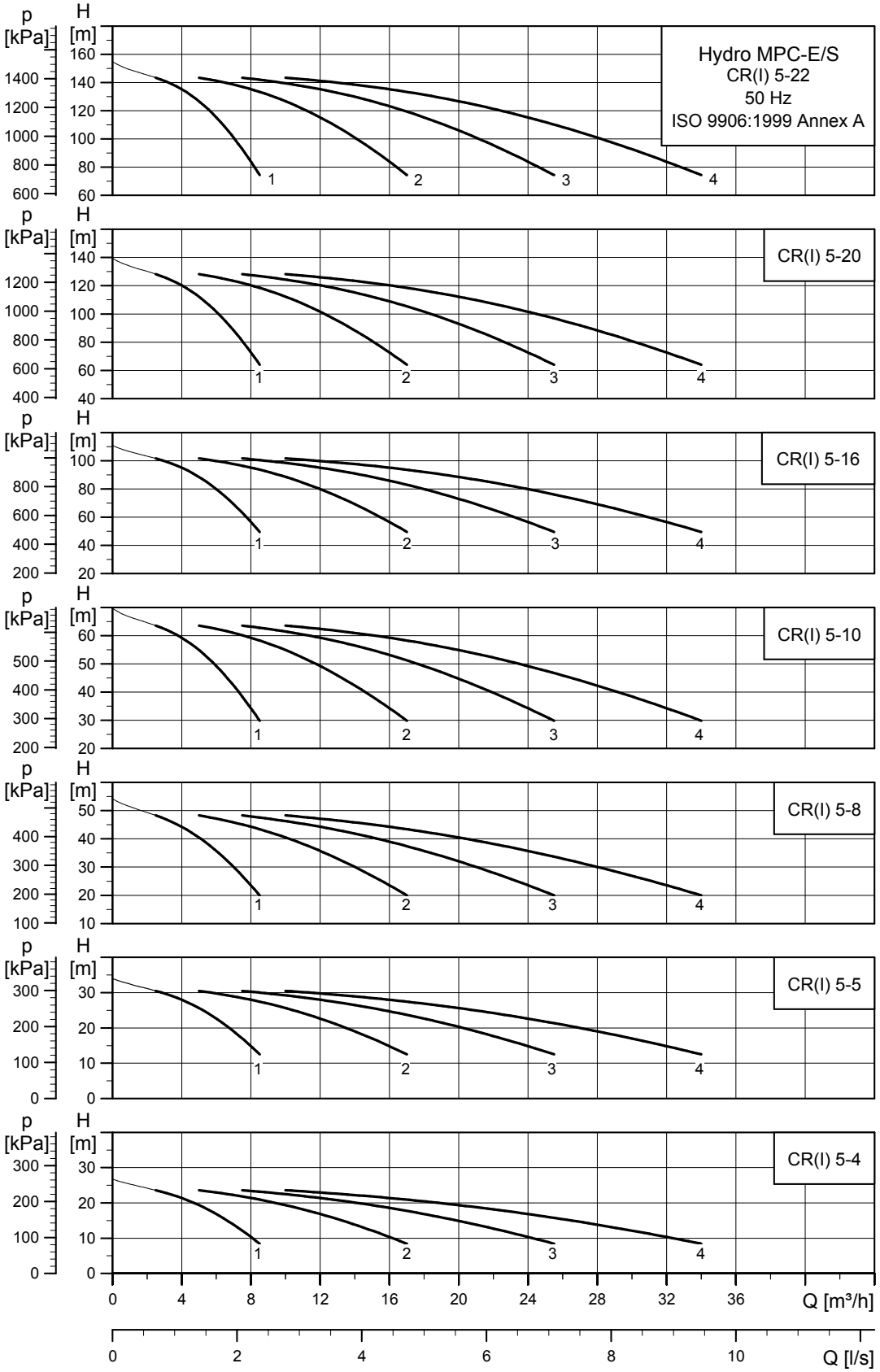

Hydro MPC-E/-S with CR, CRI 10

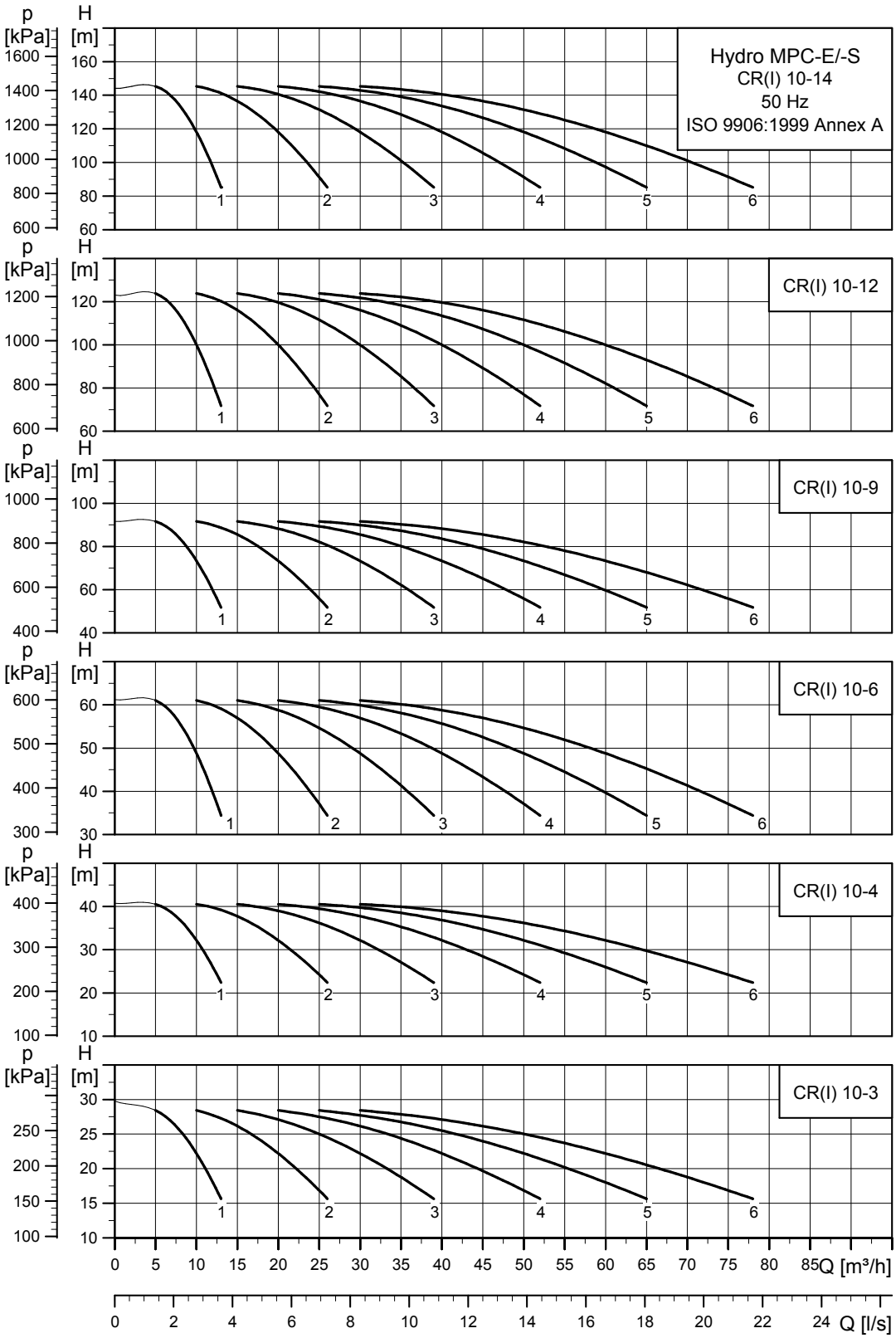

TM062938

Hydro MPC-E/-S with CR, CRI 15

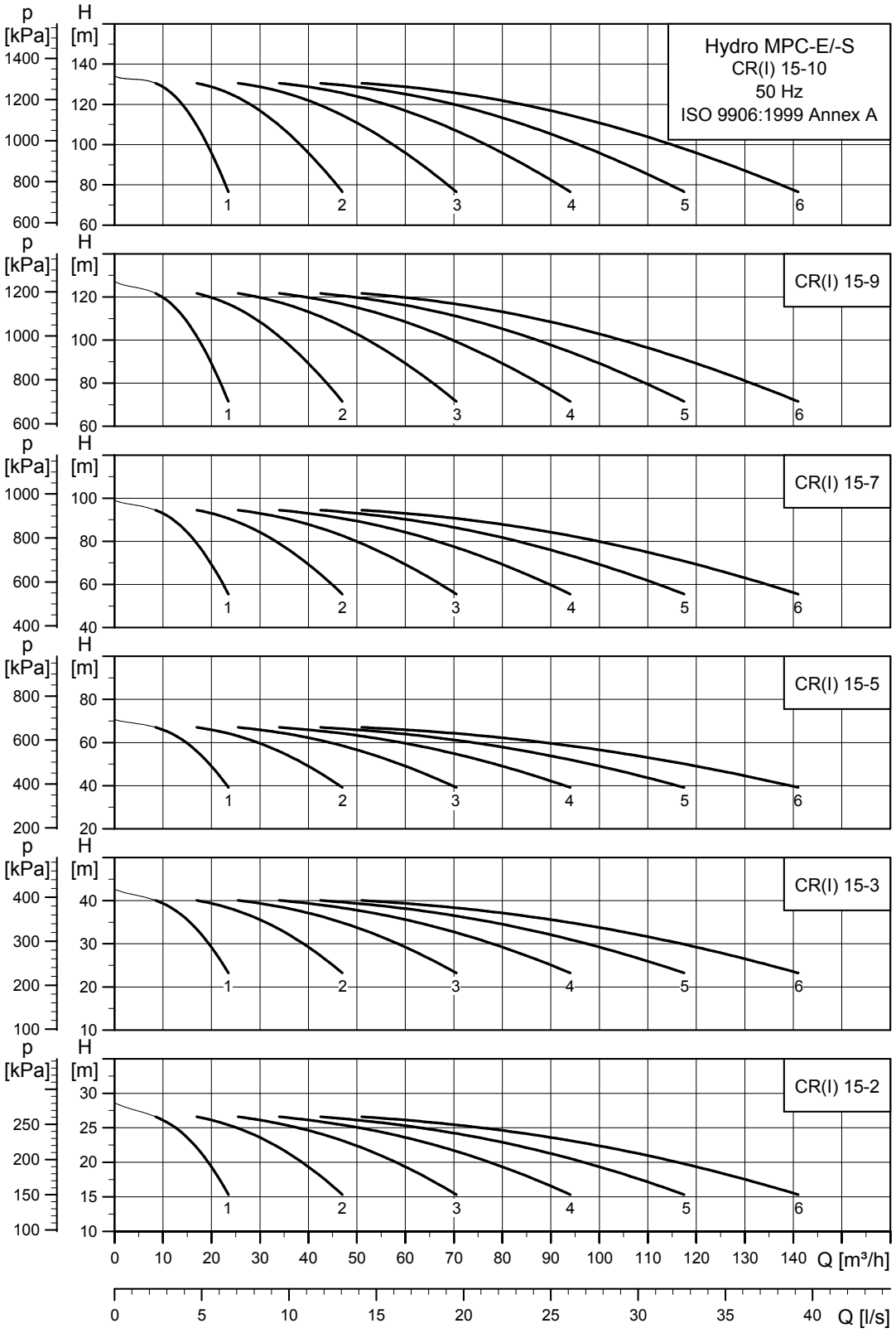

Hydro MPC-E/-S with CR, CRI 20

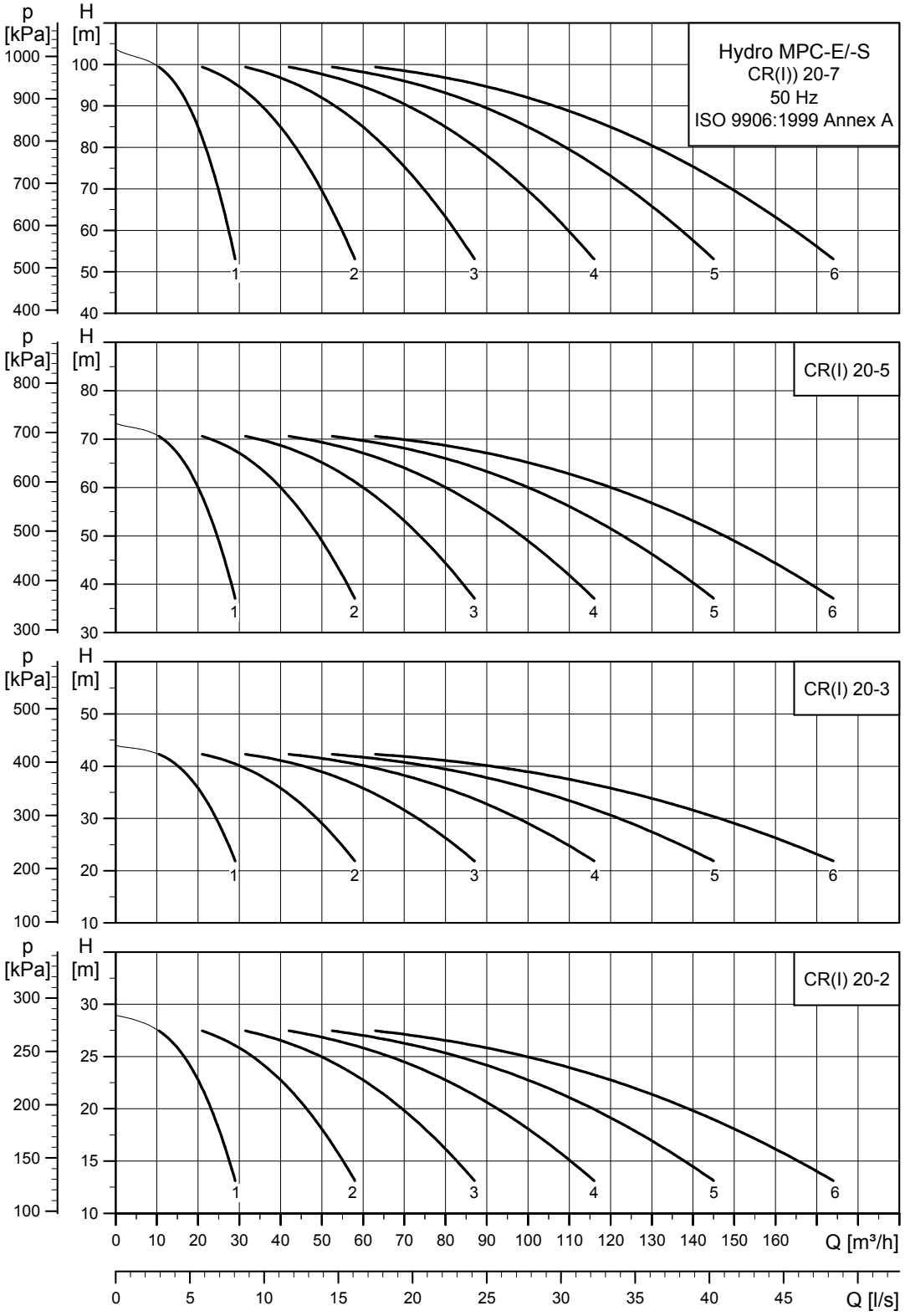

TM062940

Hydro MPC-E/-S with CR 32

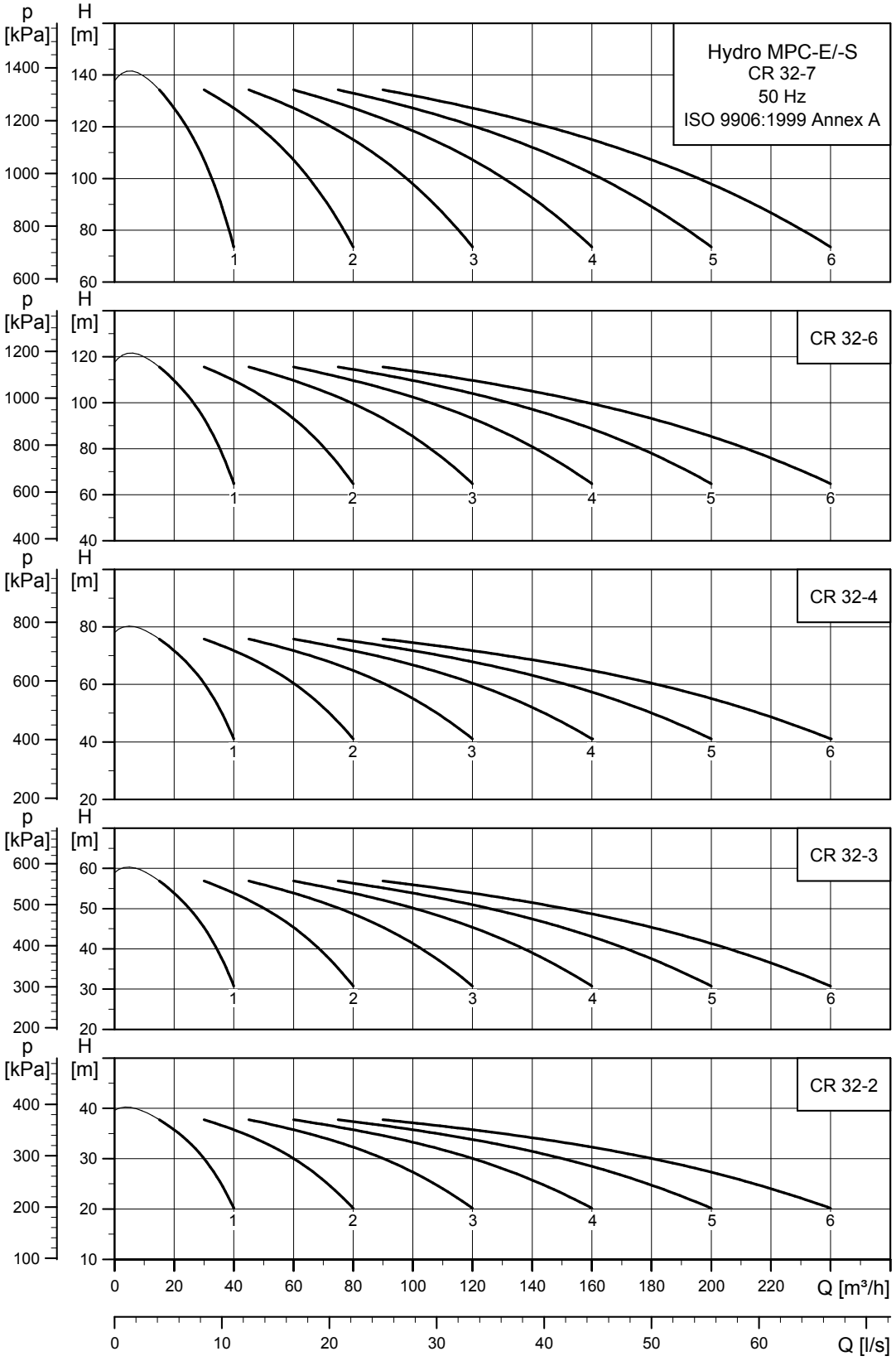

Hydro MPC-E/-S with CR 45

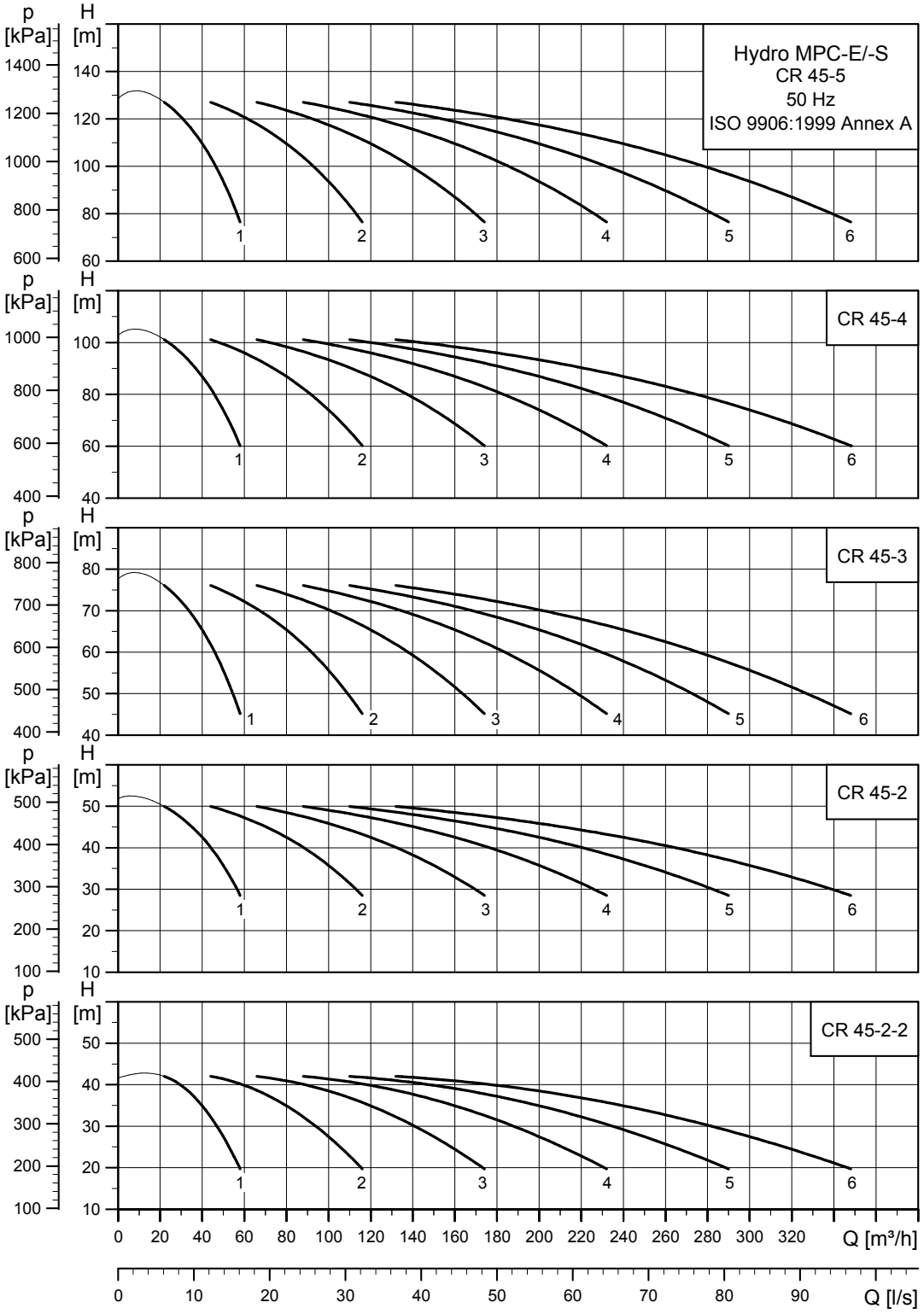

Hydro MPC-E/-S with CR 64

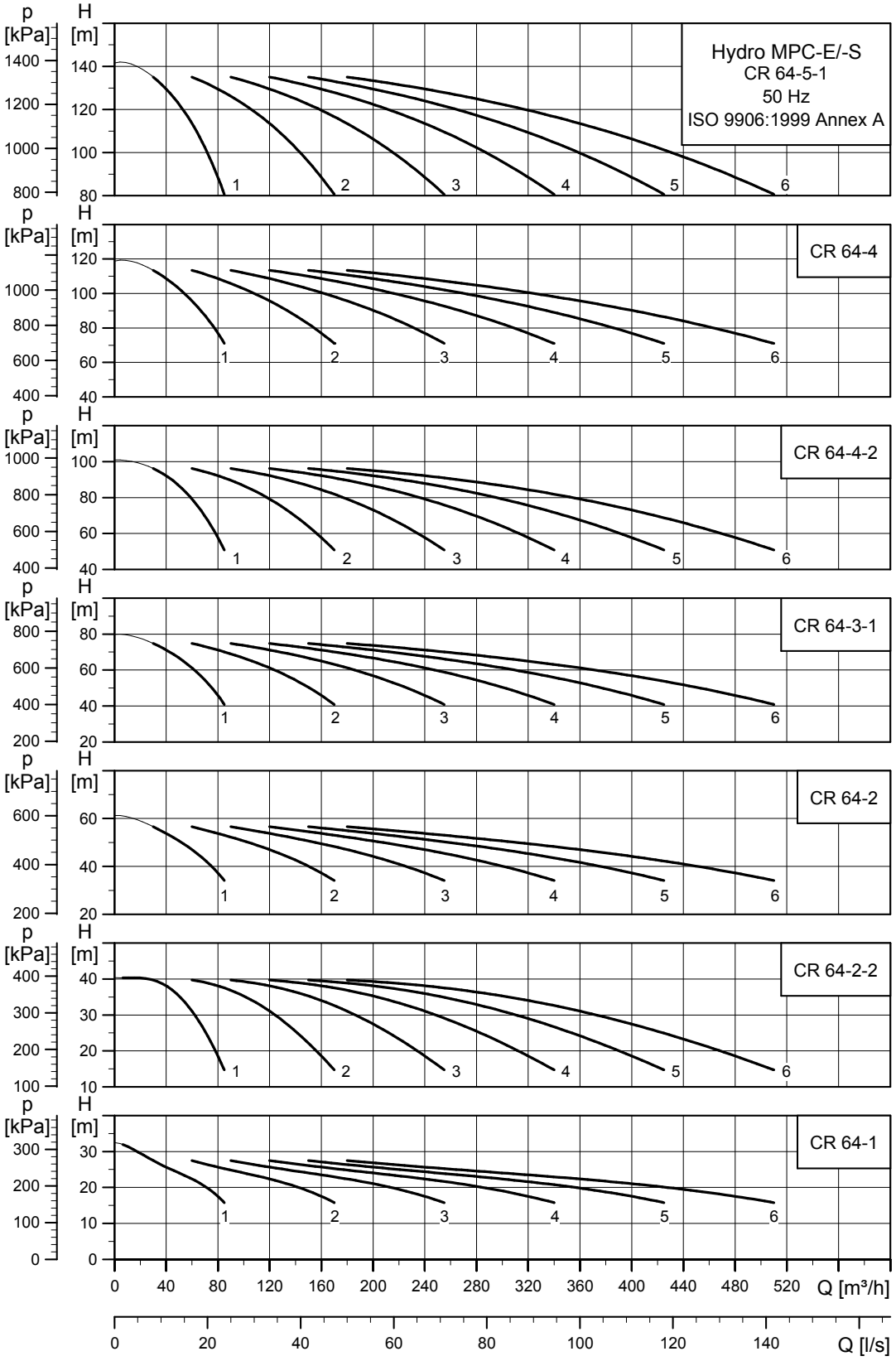

Hydro MPC-E/-S with CR 90

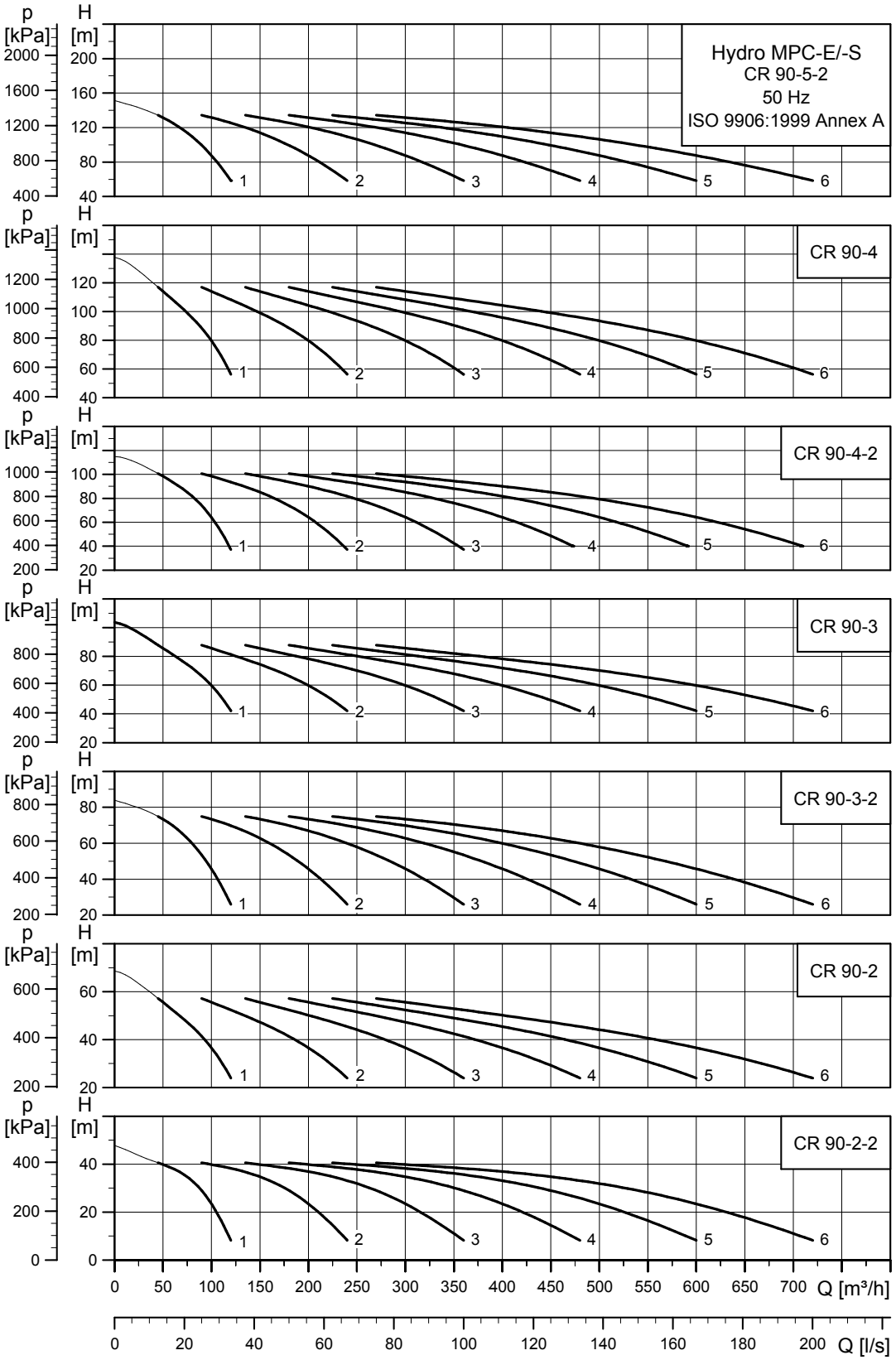

9. Curve charts, Hydro MPC-E/-S, 60 Hz

Hydro MPC-E/-S with CR, CRI 3

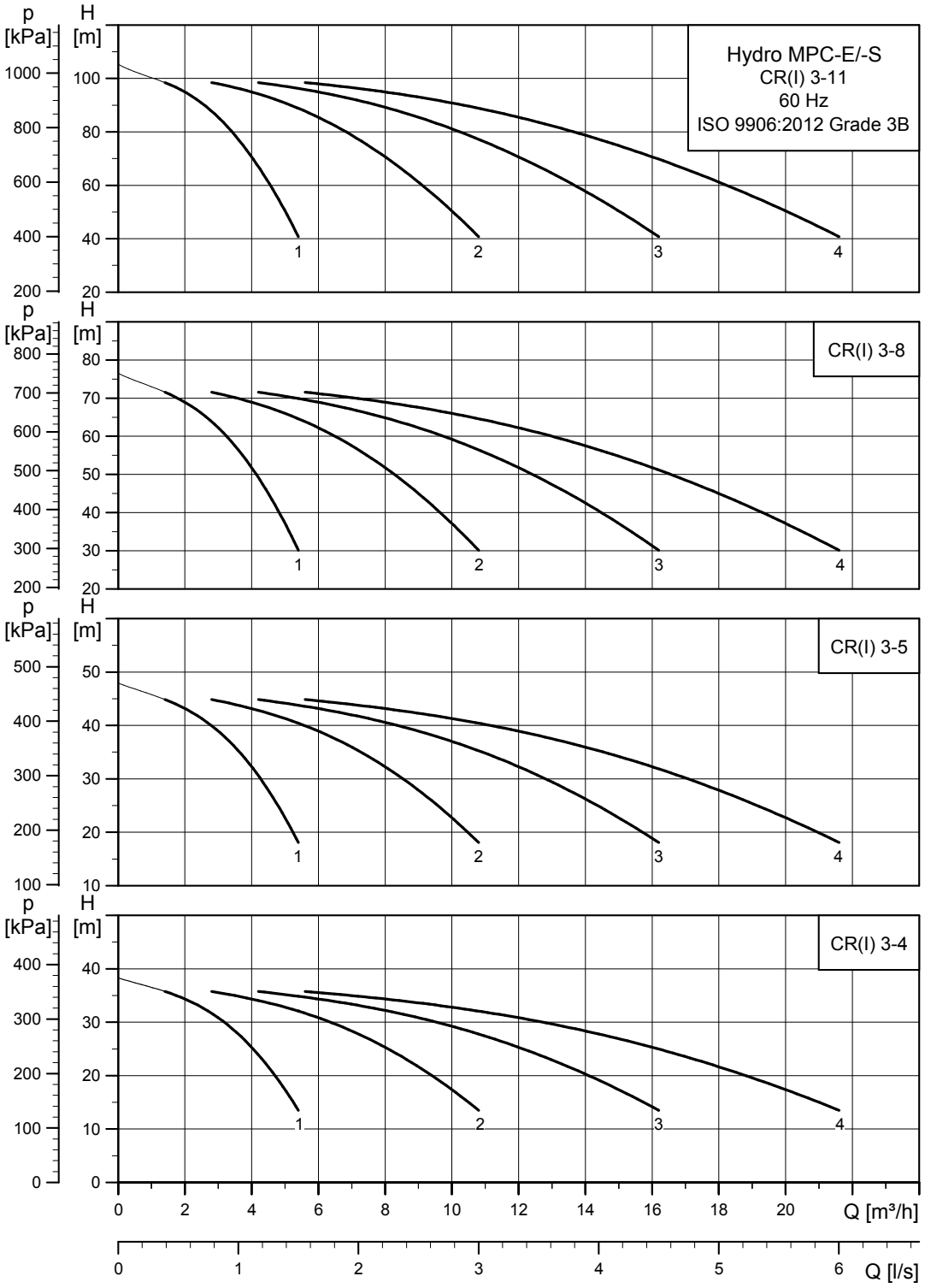

Hydro MPC-E/-S with CR, CRI 5

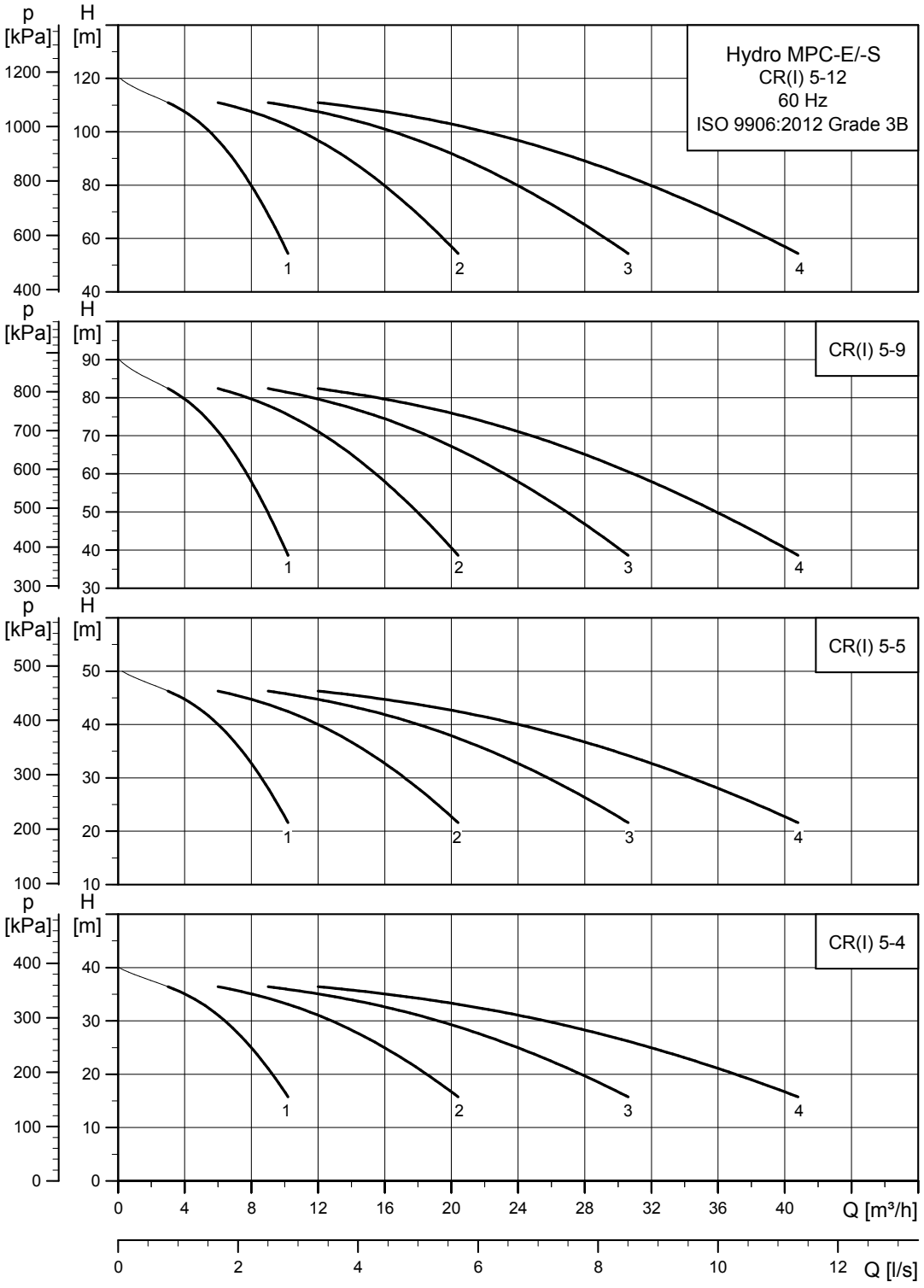

TM063241

Hydro MPC-E/-S with CR, CRI 10

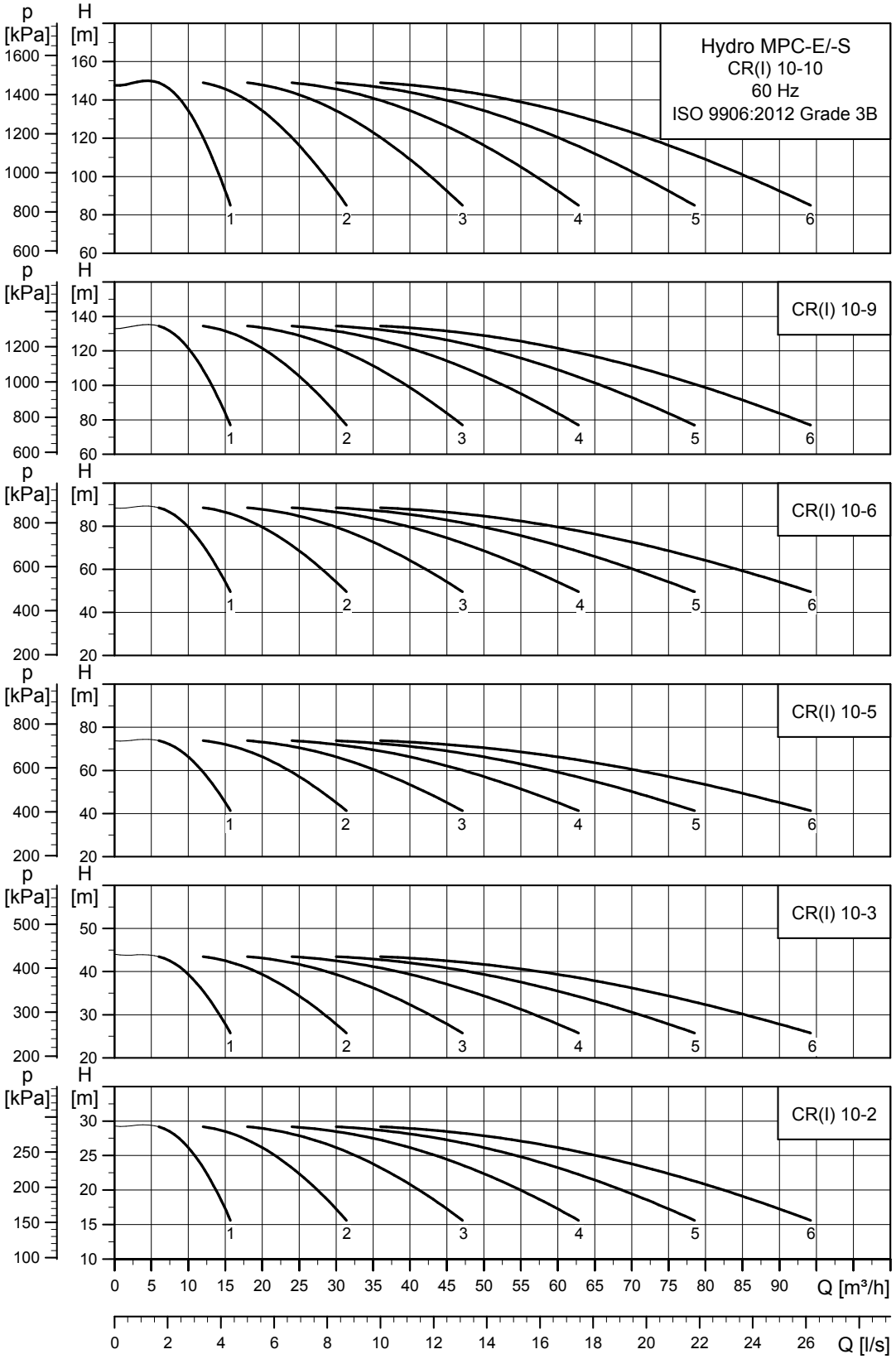

TM063242

Hydro MPC-E/-S with CR, CRI 15

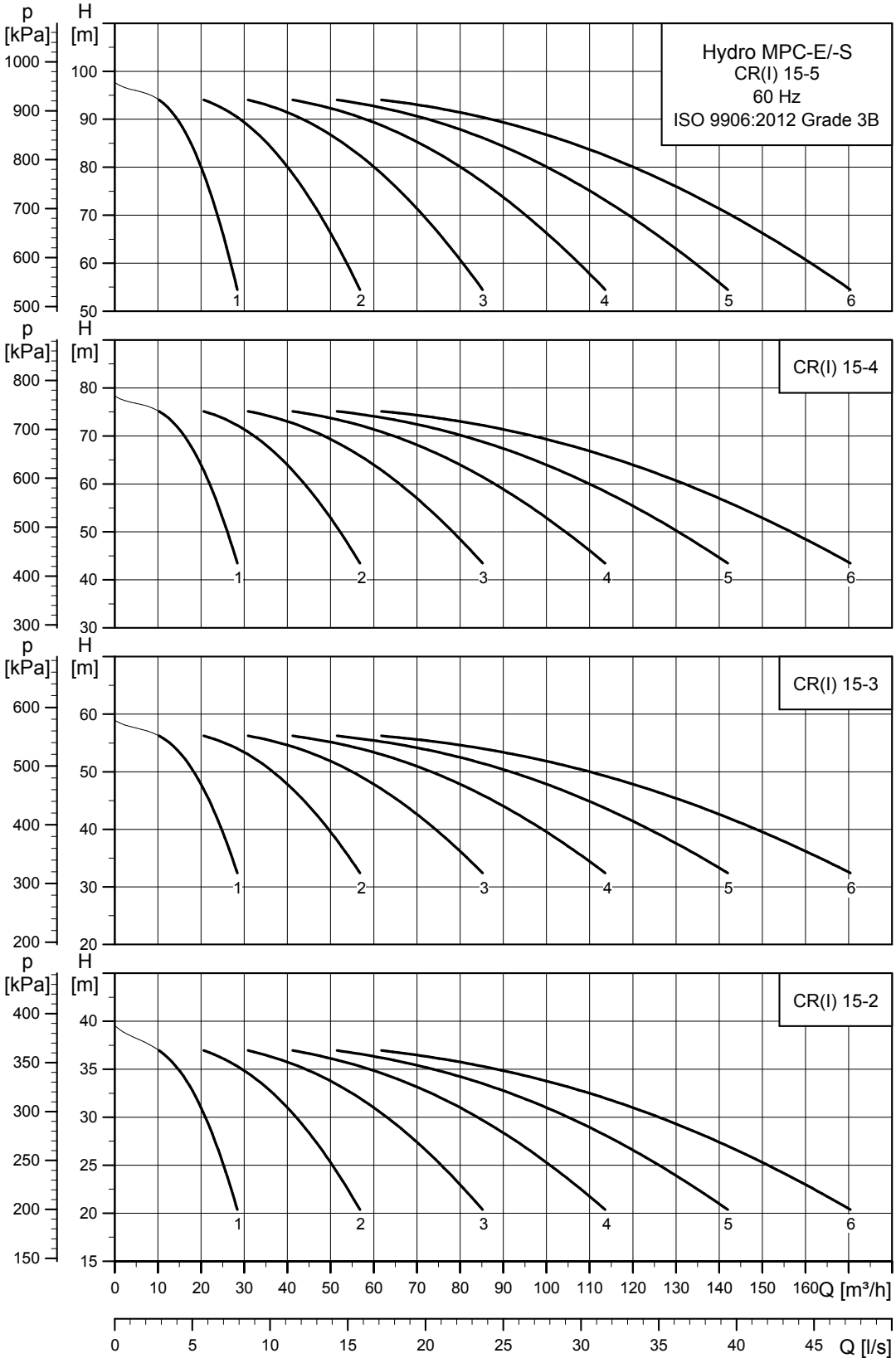

TM063243

Hydro MPC-E/-S with CR, CRI 20

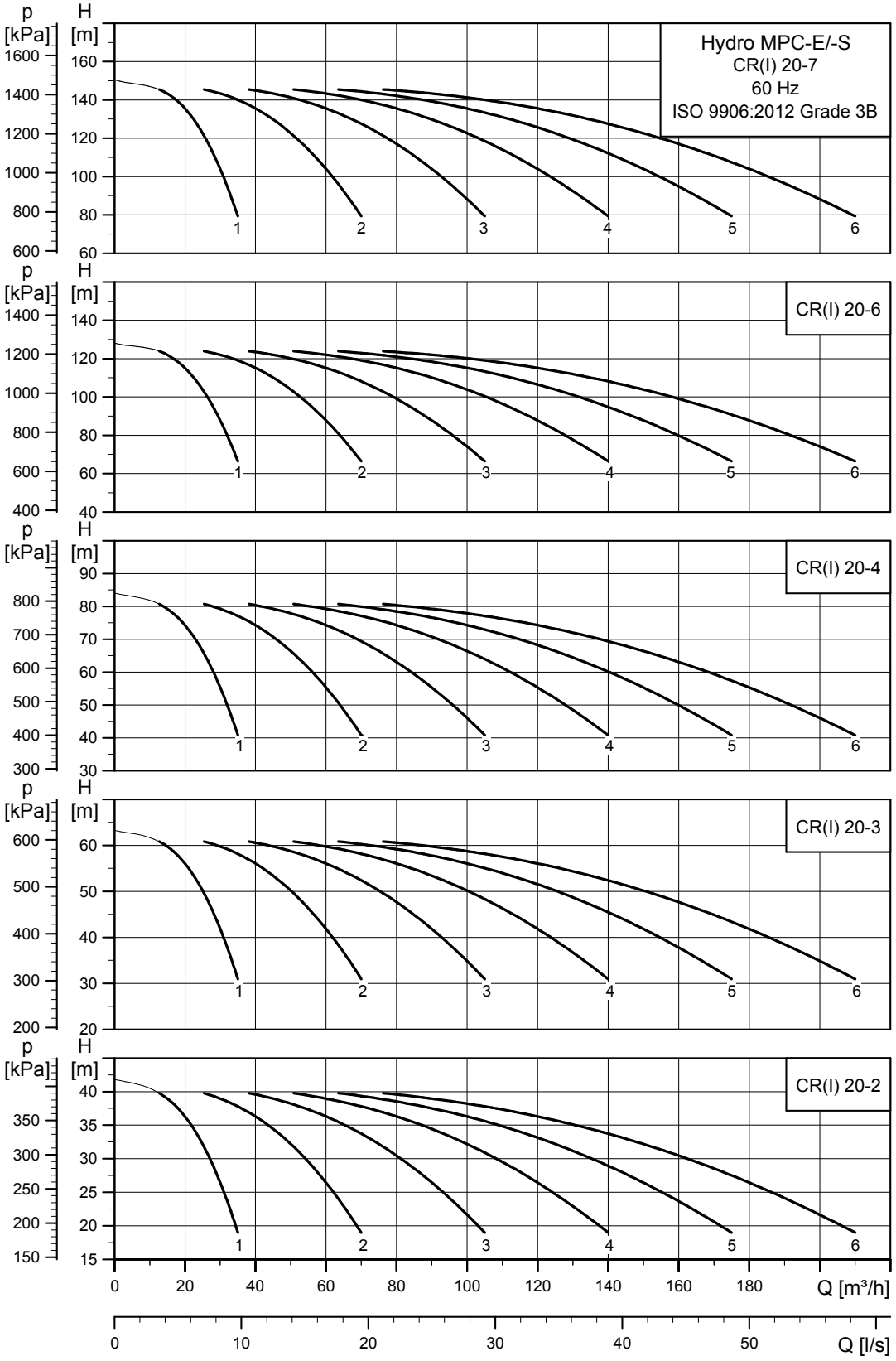

TM063244

Hydro MPC-E/-S with CR 32

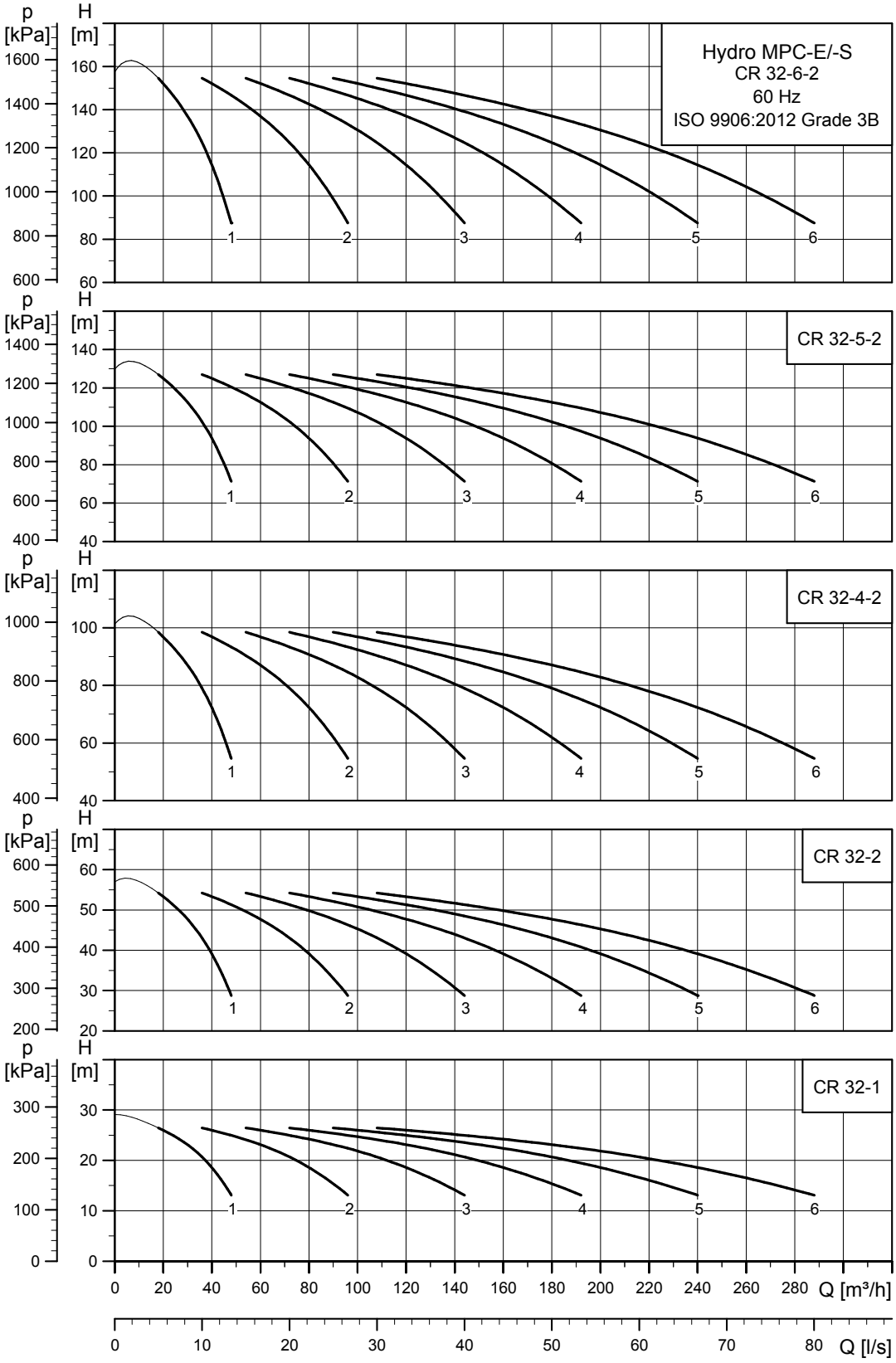

TM063245

Hydro MPC-E/-S with CR 45

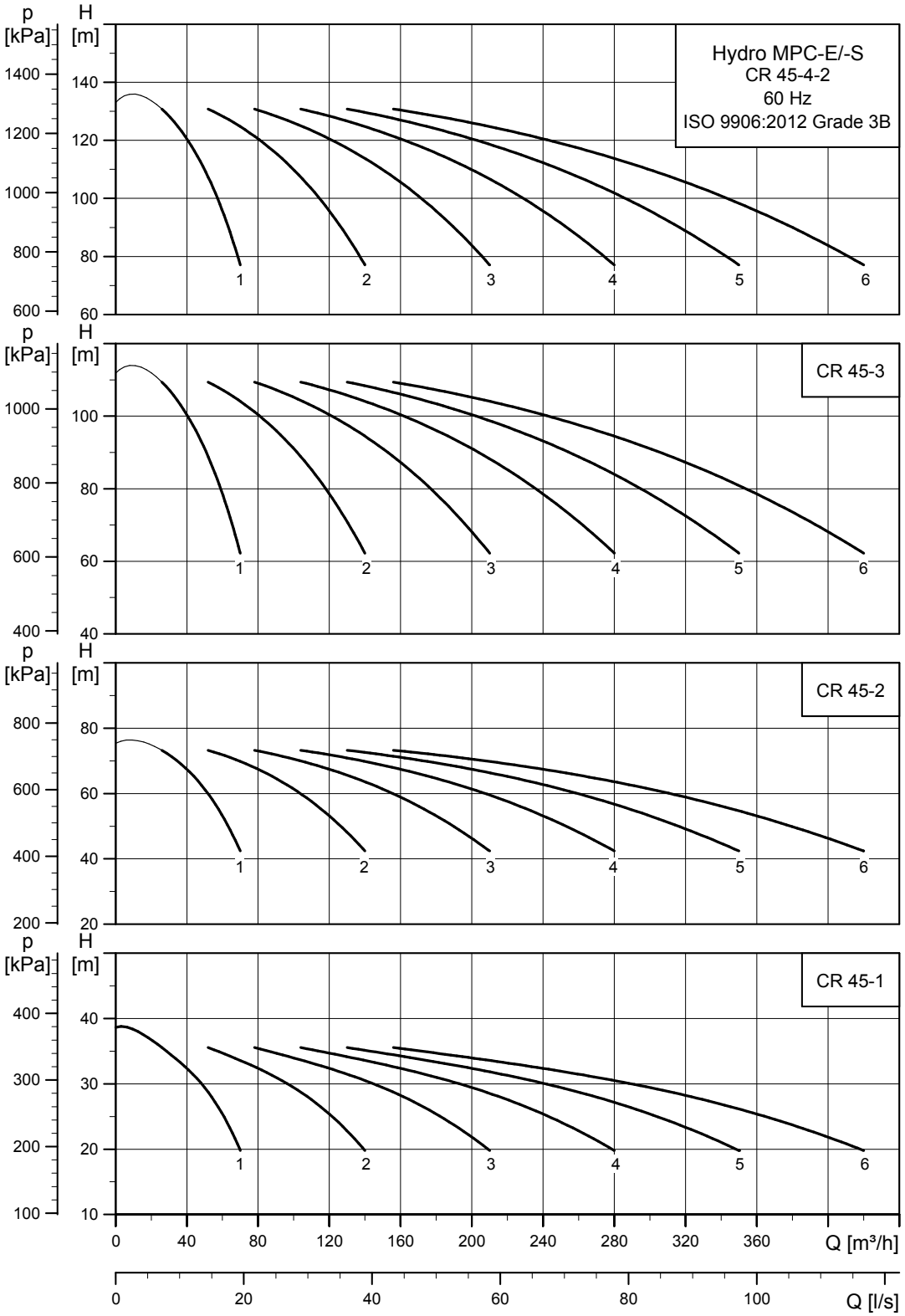

Hydro MPC-E/-S with CR 64

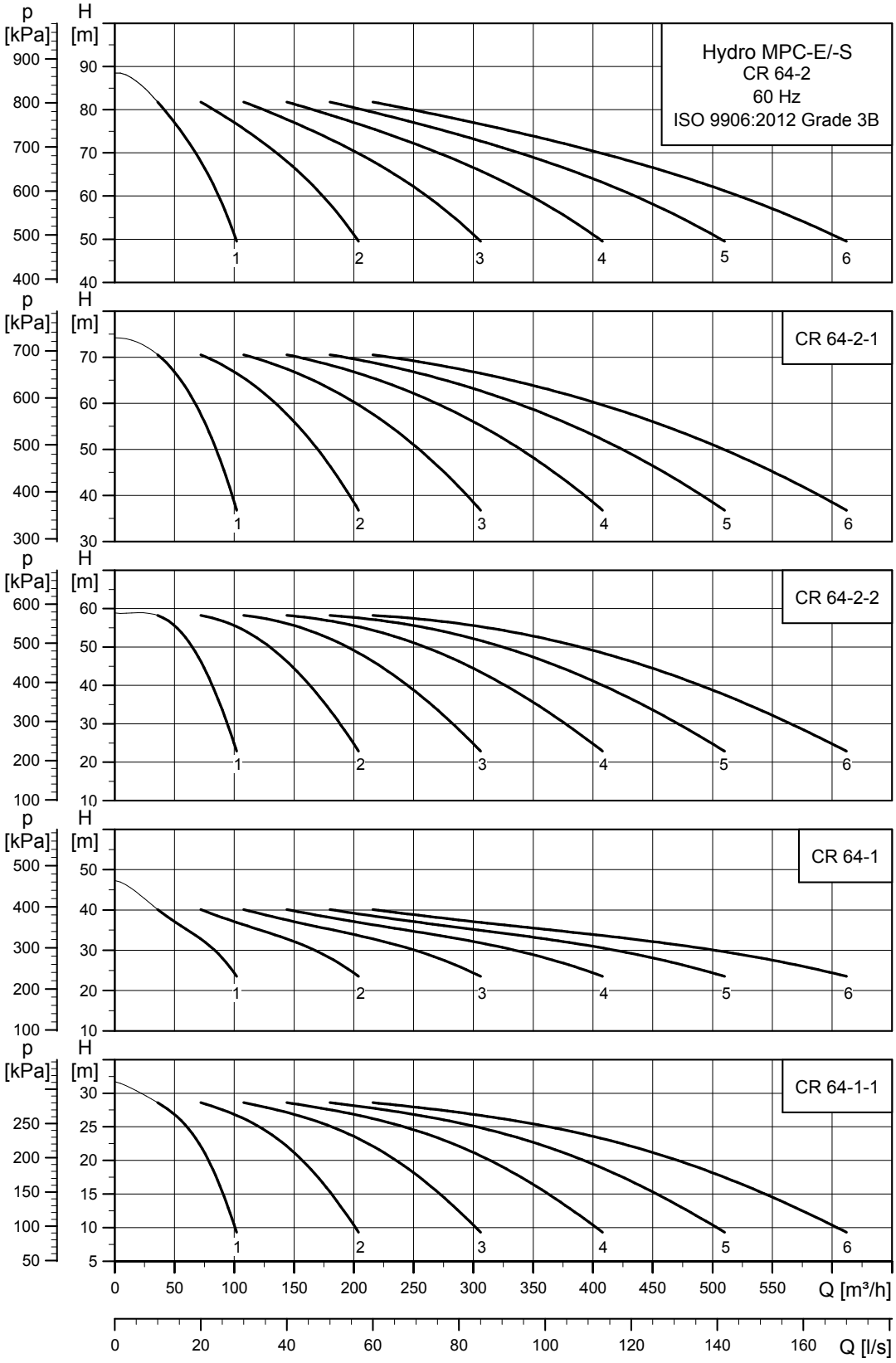

TM063247

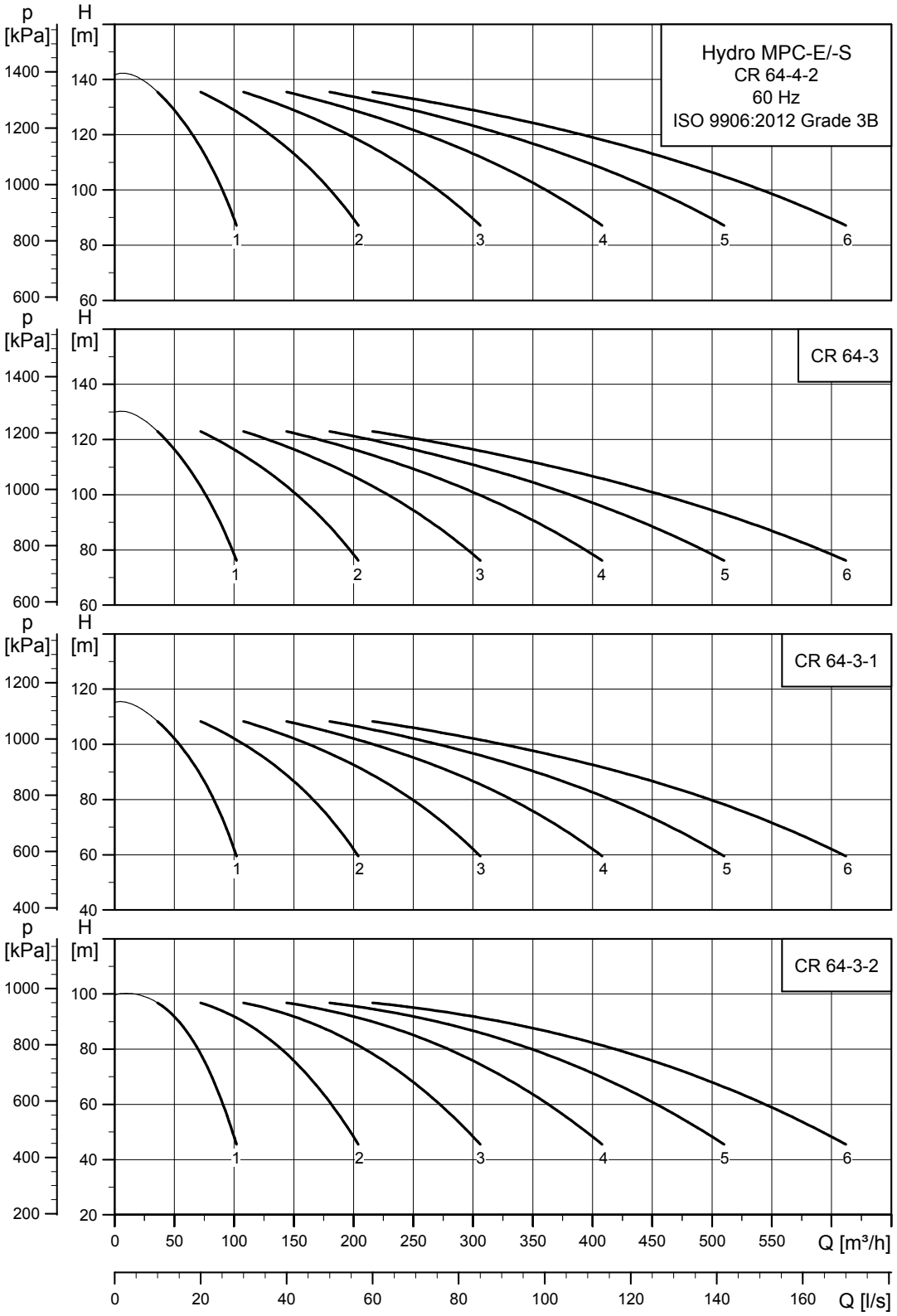
Hydro MPC-E/-S
CR 64-4-2
60 Hz
ISO 9906:2012 Grade 3B
CR 64-3
CR 64-3-1
CR 64-3-2
p [kPa]
H [m]
Q [m³/h]
Q [l/s]
1
2
3
4
5
6

TM063248

Hydro MPC-E/-S with CR 90

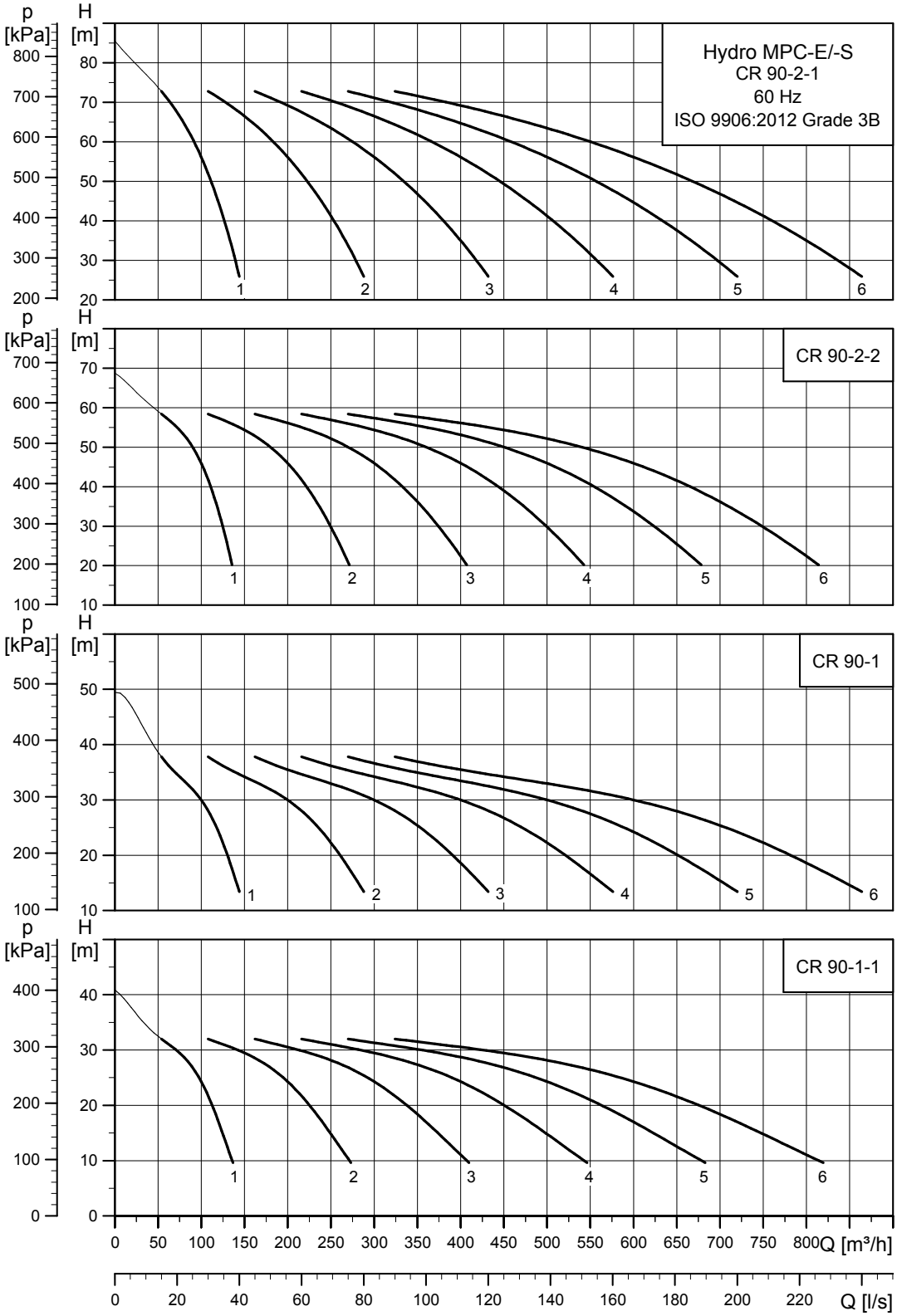

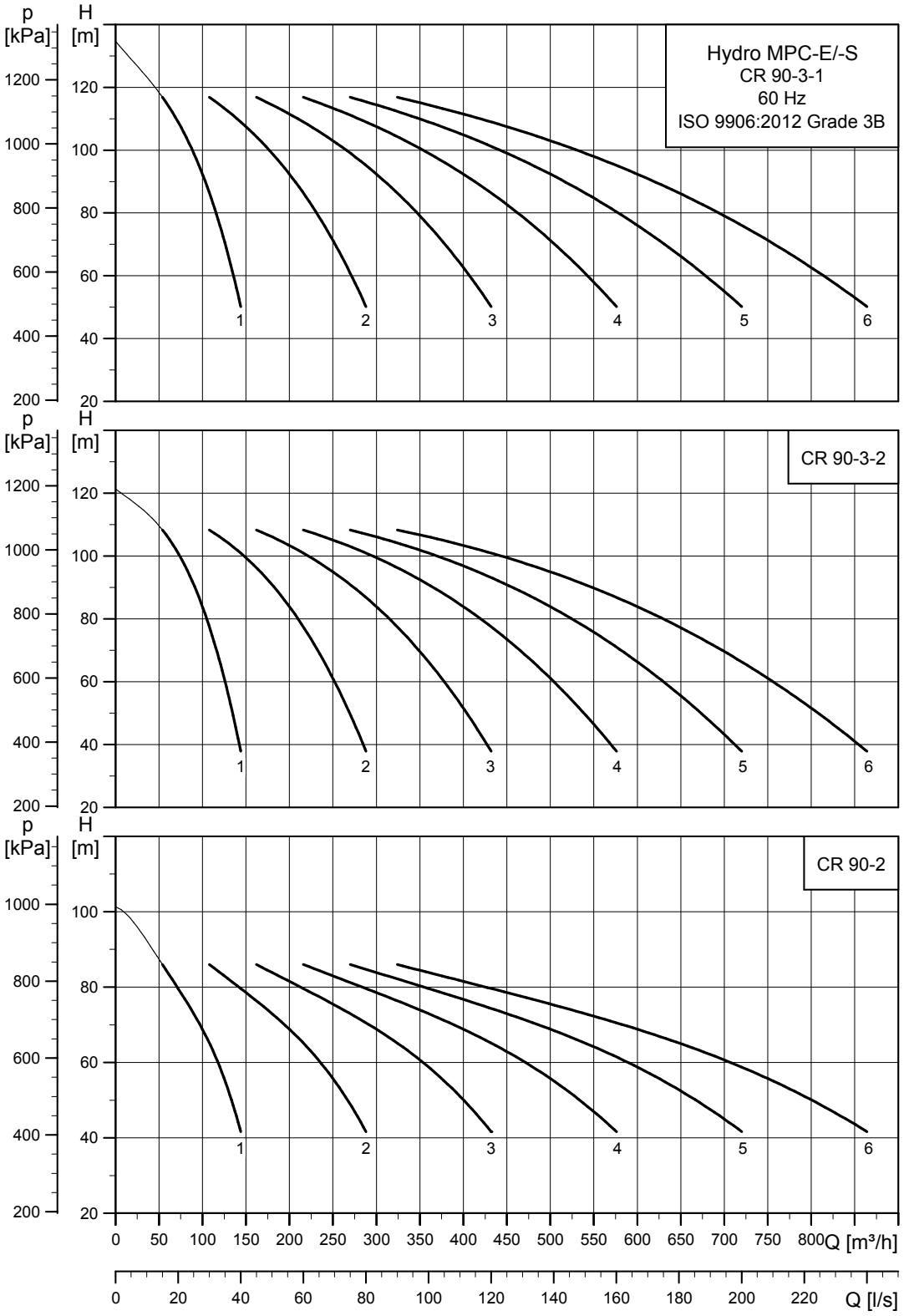
Hydro MPC-E/-S
CR 90-3-1
60 Hz
ISO 9906:2012 Grade 3B
CR 90-3-2
CR 90-2
p [kPa]
H [m]
1200
1000
800
600
400
200
120
100
80
60
40
20
1
2
3
4
5
6
0 50 100 150 200 250 300 350 400 450 500 550 600 650 700 750 800 Q [m³/h]
0 20 40 60 80 100 120 140 160 180 200 220 Q [l/s]

TM063257

10. Technical data, Hydro MPC-E/-S, 50 Hz

Hydro MPC-E/-S with CR, CRI 3, CR, CRI 5

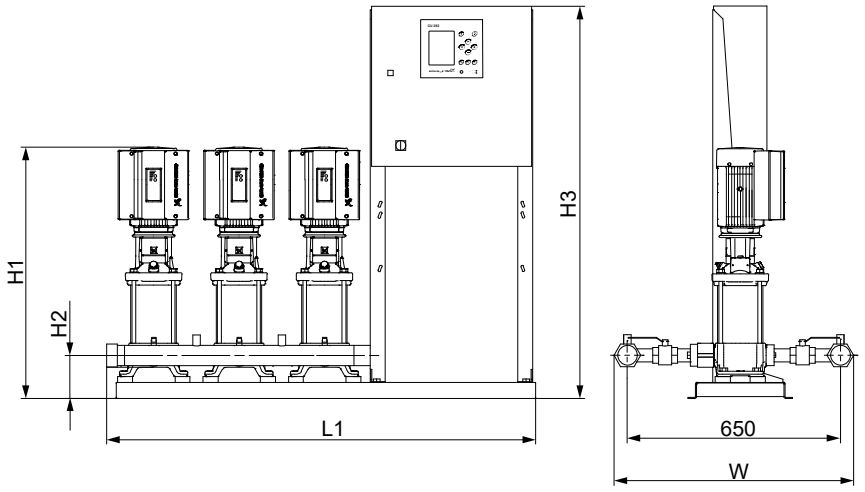

Dimensional sketch of a system with a controller mounted on the same base frame as the pumps (design E). The system is shown as an example. The pumps supplied may differ from the sketch.

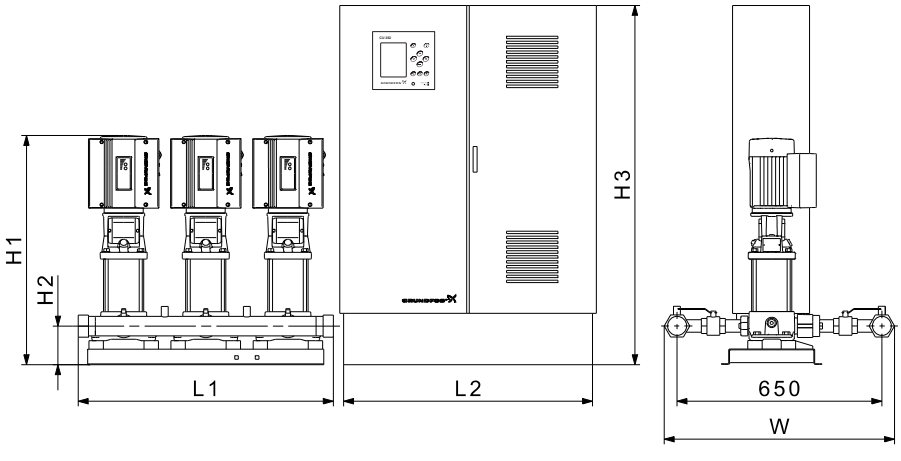

Dimensional sketch of a system with a floor-mounted controller (design G). The system is shown as an example. The pumps supplied may differ from the sketch.

Electrical data, dimensions and weights

Hydro MPC-E with CR, CRI 3

Number of pumps	Pump type	Voltage code	Motor [kW]	Max. I_N [A]	Connections	W [mm]	L1 [mm]	L2 [mm]	H1 [mm]	H2 [mm]	H3 [mm]	Weight [kg]	Design
2	CR 3-7	U4	0.55	1.4	R 2"	714	750	800	621	154	1200	174	G
	CR 3-10	U4	0.75	1.9	R 2"	714	750	800	721	154	1200	184	G
	CR 3-15	U4	1.1	2.5	R 2"	714	750	800	831	154	1200	193	G
	CR 3-19	U4	1.5	3.2	R 2"	714	750	800	949	154	1200	211	G
3	CR 3-7	U4	0.55	1.4	R 2"	714	1070	800	621	154	1200	216	G
	CR 3-10	U4	0.75	1.9	R 2"	714	1070	800	721	154	1200	230	G
	CR 3-15	U4	1.1	2.5	R 2"	714	1070	800	831	154	1200	243	G
	CR 3-19	U4	1.5	3.2	R 2"	714	1070	800	949	154	1200	271	G
4	CR 3-7	U4	0.55	1.4	R 2 1/2"	730	1390	800	621	154	1200	259	G
	CR 3-10	U4	0.75	1.9	R 2 1/2"	730	1390	800	721	154	1200	278	G
	CR 3-15	U4	1.1	2.5	R 2 1/2"	730	1390	800	831	154	1200	295	G
	CR 3-19	U4	1.5	3.2	R 2 1/2"	730	1390	800	949	154	1200	333	G

Voltage code, U4: 3 x 380-415 V, PE, 50 Hz.

Design G: ASEAN design and systems with the controller mounted on its own base for floor mounting.

Maximum current in neutral conductor, Max. I_0 [A], applies to systems with single-phase motors.

Dimensions may vary by ± 10 mm.

L1 dimensions indicates the total length according to the design (not manifold length).

Hydro MPC-S with CR, CRI 3

Number of pumps	Pump type	Voltage code	Motor [kW]	Max. I_N [A]	Connections	W [mm]	L1 [mm]	L2 [mm]	H1 [mm]	H2 [mm]	H3 [mm]	Weight [kg]	Design
2	CR 3-5	U4	0.37	1.0	R 2"	714	1200	380	585	154	1505	277	E
	CR 3-7	U4	0.55	1.4	R 2"	714	1200	380	621	154	1505	359	E
	CR 3-10	U4	0.75	1.9	DN 200	714	1200	380	721	154	1505	473	E
	CR 3-15	U4	1.1	2.5	DN 100	714	1200	380	831	154	1505	764	E
	CR 3-19	U4	1.5	3.2	DN 100	714	1200	380	949	154	1505	553	E
3	CR 3-5	U4	0.37	1.0	R 2"	714	1720	600	585	154	1505	521	E
	CR 3-7	U4	0.55	1.4	R 2"	714	1720	600	621	154	1505	160	E
	CR 3-10	U4	0.75	1.9	R 2"	714	1720	600	721	154	1505	180	E
	CR 3-15	U4	1.1	2.5	DN 200	714	1720	600	831	154	1505	178	E
	CR 3-19	U4	1.5	3.2	DN 100	714	1720	600	949	154	1505	646	E
4	CR 3-5	U4	0.37	1.0	R 2 1/2"	730	2040	600	585	154	1505	226	E
	CR 3-7	U4	0.55	1.4	R 2 1/2"	730	2040	600	621	154	1505	249	E
	CR 3-10	U4	0.75	1.9	R 2 1/2"	730	2040	600	721	154	1505	290	E
	CR 3-15	U4	1.1	2.5	DN 200	730	2040	600	831	154	1505	346	E
	CR 3-19	U4	1.5	3.2	DN 100	730	2040	600	949	154	1505	670	E

Voltage code, U4: 3 x 380-415 V, PE, 50 Hz.

Design E: ASEAN design and systems with the controller mounted on the same base frame as the pumps.

Maximum current in neutral conductor, Max. I_0 [A], applies to systems with single-phase motors.

Dimensions may vary by ± 10 mm.

L1 dimensions indicates the total length according to the design (not manifold length).

Hydro MPC-E with CR, CRI 5

Number of pumps	Pump type	Voltage code	Motor [kW]	Max. I_N [A]	Connections	W [mm]	L1 [mm]	L2 [mm]	H1 [mm]	H2 [mm]	H3 [mm]	Weight [kg]	Design
2	CR 5-4	U4	0.55	1.4	R 2"	714	750	800	603	154	1200	173	G
	CR 5-5	U4	0.75	1.9	R 2"	714	750	800	676	154	1200	181	G
	CR 5-8	U4	1.1	2.5	R 2"	714	750	800	777	154	1200	189	G
	CR 5-10	U4	1.5	3.2	R 2"	714	750	800	877	154	1200	207	G
	CR 5-16	U4	2.2	4.5	R 2"	714	750	800	1079	154	1200	231	G
	CR 5-20	U4	3	6.3	R 2"	714	750	800	1205	154	1200	235	G
3	CR 5-4	U4	0.55	1.4	R 2"	714	1070	800	603	154	1200	214	G
	CR 5-5	U4	0.75	1.9	R 2"	714	1070	800	676	154	1200	226	G
	CR 5-8U	U4	1.1	2.5	R 2"	714	1070	800	777	154	1200	238	G
	CR 5-10	U4	1.5	3.2	R 2"	714	1070	800	877	154	1200	264	G
	CR 5-16	U4	2.2	4.5	R 2"	714	1070	800	1079	154	1200	285	G
	CR 5-20	U4	3	6.3	R 2"	714	1070	800	1205	154	1200	307	G
4	CR 5-4	U4	0.55	1.4	R 2 1/2"	730	1390	800	603	154	1200	257	G
	CR 5-5	U4	0.75	1.9	R 2 1/2"	730	1390	800	676	154	1200	274	G
	CR 5-8	U4	1.1	2.5	R 2 1/2"	730	1390	800	777	154	1200	289	G
	CR 5-10	U4	1.5	3.2	R 2 1/2"	730	1390	800	877	154	1200	324	G
	CR 5-16	U4	2.2	4.5	R 2 1/2"	730	1390	800	1079	154	1200	352	G
	CR 5-20	U4	3	6.3	R 2 1/2"	730	1390	800	1205	154	1200	380	G

Voltage code, U4: 3 x 380-415 V, PE, 50 Hz.

Design G: ASEAN design and systems with the controller mounted on its own base for floor mounting.

Maximum current in neutral conductor, Max. I_0 [A], applies to systems with single-phase motors.

Dimensions may vary by ± 10 mm.

L1 dimensions indicates the total length according to the design (not manifold length).

Hydro MPC-S with CR, CRI 5

Number of pumps	Pump type	Voltage code	Motor [kW]	Max. I_N [A]	Connections	W [mm]	L1 [mm]	L2 [mm]	H1 [mm]	H2 [mm]	H3 [mm]	Weight [kg]	Design
2	CR 5-4	U4	0.55	1.4	DN 200	714	1200	380	603	154	1505	422	E
	CR 5-5	U4	0.75	1.9	R 2"	714	1200	380	676	154	1505	313	E
	CR 5-8	U4	1.1	2.5	R 2"	714	1200	380	777	154	1505	248	E
	CR 5-10	U4	1.5	3.2	DN 200	714	1200	380	877	154	1505	484	E
	CR 5-16	U4	2.2	4.5	R 2"	714	1400	600	1079	154	1505	315	E
	CR 5-20	U4	3	6.3	R 2"	714	1200	380	1205	154	1505	794	E
3	CR 5-4	U4	0.55	1.4	R 2"	714	1720	600	603	154	1505	440	E
	CR 5-5	U4	0.75	1.9	R 2"	714	1720	600	676	154	1505	131	E
	CR 5-8	U4	1.1	2.5	DN 200	714	1720	600	777	154	1505	614	E
	CR 5-10	U4	1.5	3.2	DN 250	714	1720	600	877	154	1505	243	E
	CR 5-16	U4	2.2	4.5	R 2"	714	1720	600	1079	154	1505	106	E
	CR 5-20	U4	3	6.3	R 2"	714	1720	600	1205	154	1505	117	E
4	CR 5-4	U4	0.55	1.4	R 2 1/2"	730	2040	600	603	154	1505	150	E
	CR 5-5	U4	0.75	1.9	R 2 1/2"	730	2040	600	676	154	1505	114	E
	CR 5-8	U4	1.1	2.5	R 2 1/2"	730	2040	600	777	154	1505	158	E
	CR 5-10	U4	1.5	3.2	R 2 1/2"	730	2040	600	877	154	1505	416	E
	CR 5-16	U4	2.2	4.5	R 2 1/2"	730	2040	600	1079	154	1505	751	E
	CR 5-20	U4	3	6.3	R 2 1/2"	730	2040	600	1205	154	1505	600	E

Voltage code, U4: 3 x 380-415 V, PE, 50 Hz.

Design E: ASEAN design and systems with the controller mounted on the same base frame as the pumps.

Maximum current in neutral conductor, Max. I_0 [A], applies to systems with single-phase motors.

Dimensions may vary by ± 10 mm.

L1 dimensions indicates the total length according to the design (not manifold length).

Hydro MPC-E/-S with CR, CRI 10

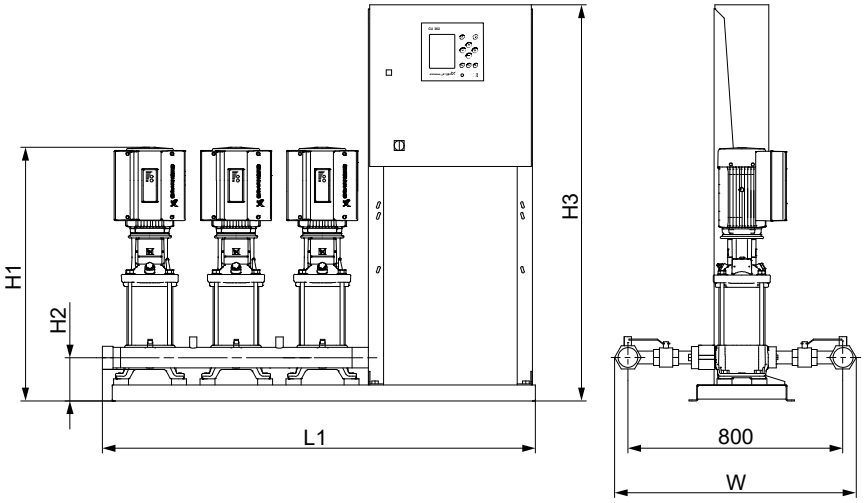

Dimensional sketch of a system with a controller mounted on the same base frame as the pumps (design E). The system is shown as an example. The pumps supplied may differ from the sketch.

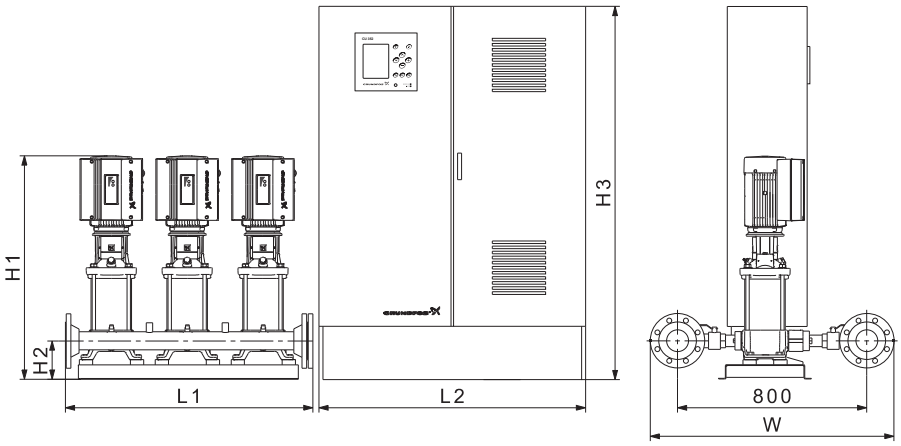

Dimensional sketch of a system with a floor-mounted controller (design G). The system is shown as an example. The pumps supplied may differ from the sketch.

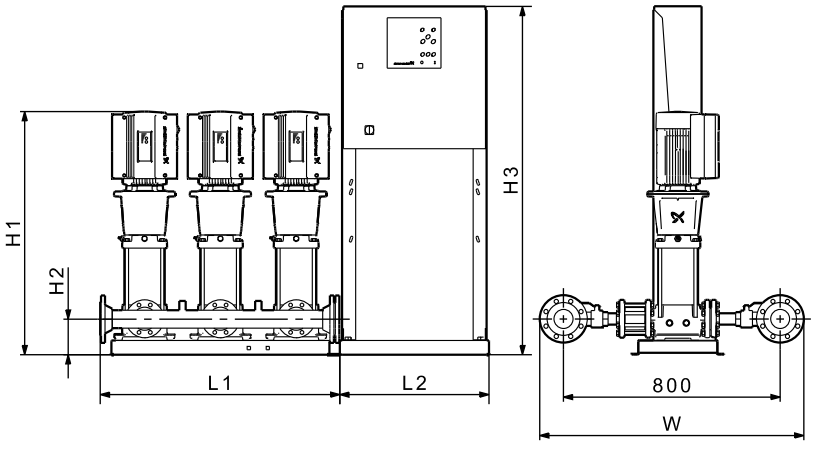

Dimensional sketch of a system with a controller mounted on a separate base frame (design H). The system is shown as an example. The pumps supplied may differ from the sketch.

Electrical data, dimensions and weights

Hydro MPC-E with CR, CRI 10

Number of pumps	Pump type	Voltage code	Motor [kW]	Max. I_N [A]	Connections	W [mm]	L1 [mm]	L2 [mm]	H1 [mm]	H2 [mm]	H3 [mm]	Weight [kg]	Design
2	CR 10-3	U4	1.1	2.5	R 2 1/2"	880	750	800	732	184	1200	219	G
	CR 10-4	U4	1.5	3.2	R 2 1/2"	880	750	800	808	184	1200	237	G
	CR 10-6	U4	2.2	4.5	R 2 1/2"	880	750	800	908	184	1200	269	G
	CR 10-9	U4	3	6.3	R 2 1/2"	880	750	800	1017	184	1200	262	G
	CR 10-12	U4	4	7.9	R 2 1/2"	880	750	800	1144	184	1200	315	G
	CR 10-14	U4	5.5	11.0	R 2 1/2"	880	750	800	1255	184	1200	318	G
3	CR 10-3	U4	1.1	2.5	DN 80	1000	1070	800	732	184	1200	282	G
	CR 10-4	U4	1.5	3.2	DN 80	1000	1070	800	808	184	1200	309	G
	CR 10-6	U4	2.2	4.5	DN 80	1000	1070	800	908	184	1200	324	G
	CR 10-9	U4	3	6.3	DN 80	1000	1070	800	1017	184	1200	347	G
	CR 10-12	U4	4	7.9	R 2 1/2"	880	1070	800	1144	184	1200	392	G
	CR 10-14	U4	5.5	11.0	R 2 1/2"	880	1610	800	1255	184	1200	400	G
4	CR 10-3	U4	1.1	2.5	DN 100	1020	1390	800	732	184	1200	361	G
	CR 10-4	U4	1.5	3.2	DN 100	1020	1390	800	808	184	1200	397	G
	CR 10-6	U4	2.2	4.5	DN 100	1020	1390	800	908	184	1200	418	G
	CR 10-9	U4	3	6.3	DN 100	1020	1390	800	1017	184	1200	447	G
	CR 10-12	U4	4	7.9	DN 100	1020	1390	800	1144	184	1200	510	G
	CR 10-14	U4	5.5	11.0	DN 100	1020	2110	800	1255	184	1800	557	G
5	CR 10-3	U4	1.1	2.5	DN 80	1000	1710	800	732	184	1200	439	G
	CR 10-4	U4	1.5	3.2	DN 80	1000	1710	800	808	184	1200	485	G
	CR 10-6	U4	2.2	4.5	DN 80	1000	1710	800	908	184	1200	510	G
	CR 10-9	U4	3	6.3	DN 80	1000	1710	800	1017	184	1200	550	G
	CR 10-12	U4	4	7.9	DN 80	1000	1710	800	1144	184	1200	630	G
	CR 10-14	U4	5.5	11.0	DN 80	1000	1710	1200	1255	184	1800	744	G
6	CR 10-3	U4	1.1	2.5	DN 100	1020	2030	800	732	184	1200	511	G
	CR 10-4	U4	1.5	3.2	DN 100	1020	2030	800	808	184	1200	567	G
	CR 10-6	U4	2.2	4.5	DN 100	1020	2030	800	908	184	1200	595	G
	CR 10-9	U4	3	6.3	DN 100	1020	2030	800	1017	184	1200	643	G
	CR 10-12	U4	4	7.9	DN 100	1020	2030	800	1144	184	1200	737	G
	CR 10-14	U4	5.5	11.0	DN 100	1020	2030	1200	1255	184	1800	854	G

Voltage code, U4: 3 x 380-415 V, PE, 50 Hz.

Design G: ASEAN design and systems with the controller mounted on its own base for floor mounting.

Maximum current in neutral conductor, Max. I_0 [A], applies to systems with single-phase motors.

Dimensions may vary by ± 10 mm.

L1 dimensions indicates the total length according to the design (not manifold length).

Hydro MPC-S with CR, CRI 10

Number of pumps	Pump type	Voltage code	Motor [kW]	Max. I_N [A]	Connections	W [mm]	L1 [mm]	L2 [mm]	H1 [mm]	H2 [mm]	H3 [mm]	Weight [kg]	Design
2	CR 10-3	U4	1.1	2.5	DN 200	880	1720	380	732	184	1505	425	E
	CR 10-4	U4	1.5	3.2	R 2 1/2"	880	1200	380	808	184	1505	847	E
	CR 10-6	U4	2.2	4.5	DN 200	880	1720	600	908	184	1505	514	E
	CR 10-9	U4	3	6.3	R 2 1/2"	880	1200	380	1017	184	1505	919	E
	CR 10-12	U4	4	7.9	R 2 1/2"	880	1400	600	1144	184	1505	601	E
	CR 10-14	U4	5.5	11.0	DN 80	880	1400	600	1255	184	1505	189	E
3	CR 10-3	U4	1.1	2.5	DN 250	1000	1720	600	732	184	1505	413	E
	CR 10-4	U4	1.5	3.2	R 2 1/2"	1000	1720	600	808	184	1505	838	E
	CR 10-6	U4	2.2	4.5	DN 250	1000	1720	600	908	184	1505	487	E
	CR 10-9	U4	3	6.3	DN 80	1000	1720	600	1017	184	1505	805	E
	CR 10-12	U4	4	7.9	DN 80	880	1720	600	1144	184	1505	920	E
	CR 10-14	U4	5.5	11.0	DN 80	880	2460	760	1255	184	1505	169	E
4	CR 10-3	U4	1.1	2.5	R 2 1/2"	1020	2040	600	732	184	1505	799	E
	CR 10-4	U4	1.5	3.2	R 2 1/2"	1020	2040	600	808	184	1505	776	E
	CR 10-6	U4	2.2	4.5	DN 100	1020	2040	600	908	184	1505	872	E
	CR 10-9	U4	3	6.3	DN 100	1020	2040	600	1017	184	1505	253	E
	CR 10-12	U4	4	7.9	DN 100	1020	2040	600	1144	184	1505	283	E
	CR 10-14	U4	5.5	11.0	DN 80	1020	2960	760	1255	184	1505	193	E
5	CR 10-3	U4	1.1	2.5	DN 100	1000	2360	600	732	184	1505	323	H
	CR 10-4	U4	1.5	3.2	DN 100	1000	2360	600	808	184	1505	405	H
	CR 10-6	U4	2.2	4.5	DN 100	1000	2360	600	908	184	1505	452	H
	CR 10-9	U4	3	6.3	DN 80	1000	2360	600	1017	184	1505	347	E
	CR 10-12	U4	4	7.9	DN 80	1000	2360	600	1144	184	1505	471	E
	CR 10-14	U4	5.5	11.0	DN 80	1000	1710	760	1255	184	1505	626	E
6	CR 10-3	U4	1.1	2.5	DN 100	1020	2680	600	732	184	1505	265	H
	CR 10-4	U4	1.5	3.2	DN 150	1020	2680	600	808	184	1505	385	H
	CR 10-6	U4	2.2	4.5	DN 150	1020	2680	600	908	184	1505	443	H
	CR 10-9	U4	3	6.3	DN 150	1020	2680	600	1017	184	1505	544	H
	CR 10-12	U4	4	7.9	DN 200	1020	2680	600	1144	184	1505	120	H
	CR 10-14	U4	5.5	11.0	DN 200	1020	2880	800	1255	184	1505	195	H

Voltage code, U4: 3 x 380-415 V, PE, 50 Hz.

Design E: ASEAN design and systems with the controller mounted on the same base frame as the pumps.

Design H: ASEAN design and systems with the controller mounted on its own base frame.

Maximum current in neutral conductor, Max. I_0 [A], applies to systems with single-phase motors.

Dimensions may vary by ± 10 mm.

L1 dimensions indicates the total length according to the design (not manifold length).

Hydro MPC-E/-S with CR, CRI 15, CR, CRI 20

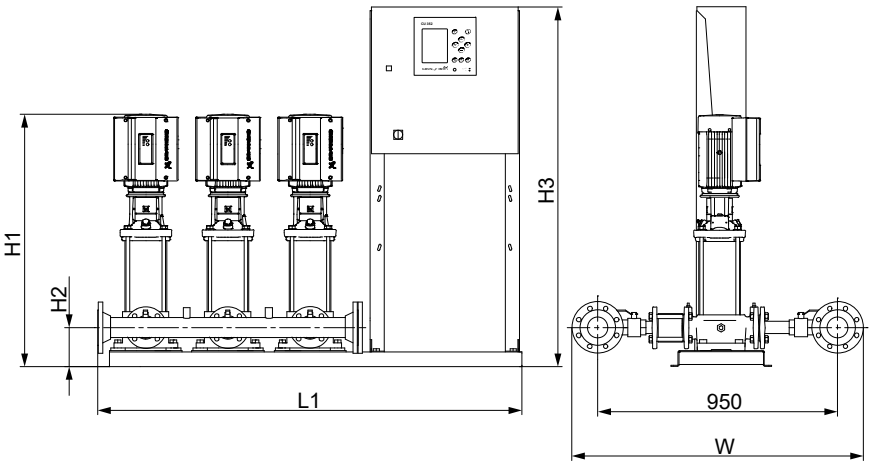

TM031184

Dimensional sketch of a system with a controller mounted on the same base frame as the pumps (design E). The system is shown as an example. The pumps supplied may differ from the sketch.

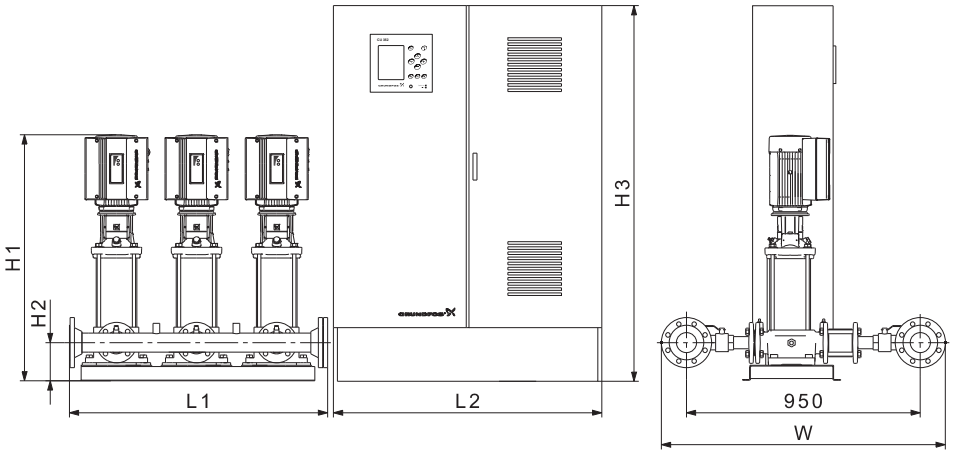

TM033045

Dimensional sketch of a system with a floor-mounted controller (design G). The system is shown as an example. The pumps supplied may differ from the sketch.

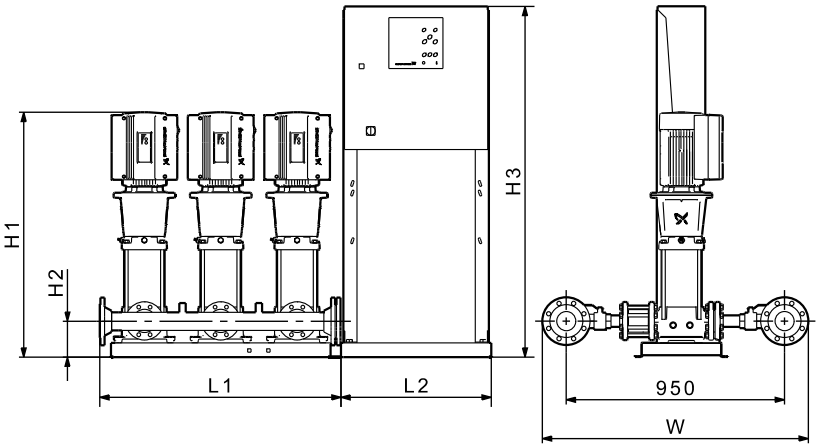

TM047832

Dimensional sketch of a system with a controller mounted on a separate base frame (design H). The system is shown as an example. The pumps supplied may differ from the sketch.

Electrical data, dimensions and weights

Hydro MPC-E with CR, CRI 15

Number of pumps	Pump type	Voltage code	Motor [kW]	Max. I_N [A]	Connections	W [mm]	L1 [mm]	L2 [mm]	H1 [mm]	H2 [mm]	H3 [mm]	Weight [kg]	Design
2	CR 15-2	U4	2.2	4.5	DN 80	1150	750	800	840	194	1200	290	G
	CR 15-3	U4	3	6.3	DN 80	1150	750	800	904	194	1200	280	G
	CR 15-5	U4	4	7.9	DN 80	1150	750	800	1031	194	1200	321	G
	CR 15-7	U4	5.5	11.0	DN 80	1150	750	800	1172	194	1200	355	G
	CR 15-9	U4	7.5	14.2	DN 80	1150	750	800	1250	194	1200	384	G
	CR 15-10	U4	11	20.2	DN 80	1150	750	800	1464	194	1200	396	G
3	CR 15-2	U4	2.2	4.5	DN 100	1170	1070	800	840	194	1200	353	G
	CR 15-3	U4	3	6.3	DN 100	1170	1070	800	904	194	1200	370	G
	CR 15-5	U4	4	7.9	DN 100	1170	1070	800	1031	194	1200	415	G
	CR 15-7	U4	5.5	11.0	DN 100	1170	1070	800	1172	194	1200	484	G
	CR 15-9	U4	7.5	14.2	DN 100	1170	1070	800	1250	194	1200	523	G
	CR 15-10	U4	11	20.2	DN 100	1170	1070	800	1464	194	1200	541	G
4	CR 15-2	U4	2.2	4.5	DN 100	1170	1390	800	840	194	1200	434	G
	CR 15-3	U4	3	6.3	DN 100	1170	1390	800	904	194	1200	455	G
	CR 15-5	U4	4	7.9	DN 100	1170	1390	800	1031	194	1200	518	G
	CR 15-7	U4	5.5	11.0	DN 100	1170	1390	800	1172	194	1800	651	G
	CR 15-9	U4	7.5	14.2	DN 100	1170	1390	800	1250	194	1800	705	G
	CR 15-10	U4	11	20.2	DN 100	1170	1390	800	1464	194	1800	729	G
5	CR 15-2	U4	2.2	4.5	DN 150	1235	1710	800	840	194	1200	554	G
	CR 15-3	U4	3	6.3	DN 150	1235	1710	800	904	194	1200	583	G
	CR 15-5	U4	4	7.9	DN 150	1235	1710	800	1031	194	1200	663	G
	CR 15-7	U4	5.5	11.0	DN 150	1235	1710	1200	1172	194	1800	889	G
	CR 15-9	U4	7.5	14.2	DN 150	1235	1710	1200	1250	194	1800	930	G
	CR 15-10	U4	11	20.2	DN 150	1235	1710	1200	1464	194	1800	960	G
6	CR 15-2	U4	2.2	4.5	DN 150	1235	2030	800	840	194	1200	634	G
	CR 15-3	U4	3	6.3	DN 150	1235	2030	800	904	194	1200	670	G
	CR 15-5	U4	4	7.9	DN 150	1235	2030	800	1031	194	1200	764	G
	CR 15-7	U4	5.5	11.0	DN 150	1235	2030	1200	1172	194	1800	1058	G
	CR 15-9	U4	7.5	14.2	DN 150	1235	2030	1200	1250	194	1800	1073	G
	CR 15-10	U4	11	20.2	DN 150	1235	2030	1200	1464	194	1800	1110	G

Voltage code, U4: 3 x 380-415 V, PE, 50 Hz.
Design G: ASEAN design and systems with the controller mounted on its own base for floor mounting.
All pumps are fitted with three-phase motors.
Dimensions may vary by ± 10 mm.
L1 dimensions indicates the total length according to the design (not manifold length).

Hydro MPC-S with CR, CRI 15

Number of pumps	Pump type	Voltage code	Motor [kW]	Max. I_N [A]	Connections	W [mm]	L1 [mm]	L2 [mm]	H1 [mm]	H2 [mm]	H3 [mm]	Weight [kg]	Design
2	CR 15-2	U4	2.2	4.5	DN 100	1150	1200	600	840	194	1505	1181	H
	CR 15-3	U4	3	6.3	DN 100	1150	1200	380	904	194	1505	782	H
	CR 15-5	U4	4	7.9	DN 100	1150	1200	600	1031	194	1505	1107	H
	CR 15-7	U4	5.5	11.0	DN 100	1150	1200	600	1172	194	1505	997	H
	CR 15-9	U4	7.5	14.2	DN 100	1150	1200	600	1250	194	1505	1133	H
	CR 15-10	U4	11	20.2	DN 100	1150	1200	600	1464	194	1505	1130	H
3	CR 15-2	U4	2.2	4.5	DN 100	1170	1720	600	840	194	1505	1118	H
	CR 15-3	U4	3	6.3	DN 100	1170	1720	600	904	194	1505	1263	H
	CR 15-5	U4	4	7.9	DN 100	1170	1720	600	1031	194	1505	338	H
	CR 15-7	U4	5.5	11.0	DN 150	1170	1070	960	1172	194	1505	338	E
	CR 15-9	U4	7.5	14.2	DN 150	1170	1070	960	1250	194	1505	362	E
	CR 15-10	U4	11	20.2	DN 150	1170	1070	960	1464	194	1505	415	E
4	CR 15-2	U4	2.2	4.5	DN 150	1170	2040	600	840	194	1505	439	E
	CR 15-3	U4	3	6.3	DN 150	1170	2040	600	904	194	1505	551	E
	CR 15-5	U4	4	7.9	DN 150	1170	2040	600	1031	194	1505	596	E
	CR 15-7	U4	5.5	11.0	DN 150	1170	640	960	1172	194	1505	454	H
	CR 15-9	U4	7.5	14.2	DN 150	1170	640	960	1250	194	1505	562	H
	CR 15-10	U4	11	20.2	DN 150	1170	640	960	1464	194	1505	611	E
5	CR 15-2	U4	2.2	4.5	DN 150	1235	1710	760	840	194	1505	762	E
	CR 15-3	U4	3	6.3	DN 150	1235	1710	760	904	194	1505	278	H
	CR 15-5	U4	4	7.9	DN 150	1235	1710	760	1031	194	1505	229	H
	CR 15-7	U4	5.5	11.0	DN 80	1235	1710	960	1172	194	1505	205	H
	CR 15-9	U4	7.5	14.2	DN 80	1235	1710	960	1250	194	1505	266	H
	CR 15-10	U4	11	20.2	DN 100	1235	1710	960	1464	194	1505	191	H
6	CR 15-2	U4	2.2	4.5	DN 100	1235	960	760	840	194	1505	258	H
	CR 15-3	U4	3	6.3	DN 100	1235	960	760	904	194	1505	231	H
	CR 15-5	U4	4	7.9	DN 100	1235	960	760	1031	194	1505	154	H
	CR 15-7	U4	5.5	11.0	DN 100	1235	960	960	1172	194	1505	215	H
	CR 15-9	U4	7.5	14.2	DN 150	1235	960	960	1250	194	1505	301	H
	CR 15-10	U4	11	20.2	DN 150	1235	960	960	1464	194	1505	190	H

Voltage code, U4: 3 x 380-415 V, PE, 50 Hz.

Design E: ASEAN design and systems with the controller mounted on the same base frame as the pumps.

Design H: ASEAN design and systems with the controller mounted on its own base frame.

All pumps are fitted with three-phase motors.

Dimensions may vary by ± 10 mm.

L1 dimensions indicates the total length according to the design (not manifold length).

Hydro MPC-E with CR, CRI 20

Number of pumps	Pump type	Voltage code	Motor [kW]	Max. I_N [A]	Connections	W [mm]	L1 [mm]	L2 [mm]	H1 [mm]	H2 [mm]	H3 [mm]	Weight [kg]	Design
2	CR 20-2	U4	2.2	4.5	DN 80	1150	750	800	840	194	1200	290	G
	CR 20-3	U4	4	7.6	DN 80	1150	750	800	941	194	1200	315	G
	CR 20-5	U4	5.5	11.0	DN 80	1150	750	800	1082	194	1200	349	G
	CR 20-7	U4	7.5	15.2	DN 80	1150	750	800	1160	194	1200	378	G
3	CR 20-2	U4	2.2	4.5	DN 100	1170	1070	800	840	194	1200	353	G
	CR 20-3	U4	4	7.6	DN 100	1170	1070	800	941	194	1200	406	G
	CR 20-5	U4	5.5	11.0	DN 100	1170	1070	800	1082	194	1200	494	G
	CR 20-7	U4	7.5	15.2	DN 100	1170	1070	800	1160	194	1200	514	G
4	CR 20-2	U4	2.2	4.5	DN 100	1170	1390	800	840	194	1200	434	G
	CR 20-3	U4	4	7.6	DN 100	1170	1390	800	941	194	1200	506	G
	CR 20-5	U4	5.5	11.0	DN 100	1170	1390	800	1082	194	1800	638	G
	CR 20-7	U4	7.5	15.2	DN 100	1170	1390	800	1160	194	1800	693	G
5	CR 20-2	U4	2.2	4.5	DN 150	1235	1710	800	840	194	1200	554	G
	CR 20-3	U4	4	7.6	DN 150	1235	1710	800	941	194	1200	648	G
	CR 20-5	U4	5.5	11.0	DN 150	1235	1710	1200	1082	194	1800	850	G
	CR 20-7	U4	7.5	15.2	DN 150	1235	1710	1200	1160	194	1800	916	G
6	CR 20-2	U4	2.2	4.5	DN 150	1235	2030	800	840	194	1200	635	G
	CR 20-3	U4	4	7.6	DN 150	1235	2030	800	941	194	1200	746	G
	CR 20-5	U4	5.5	11.0	DN 150	1235	2030	1200	1082	194	1800	1017	G
	CR 20-7	U4	7.5	15.2	DN 150	1235	2030	1200	1160	194	1800	1055	G

Voltage code, U4: 3 x 380-415 V, PE, 50 Hz.

Design G: ASEAN design and systems with the controller mounted on its own base for floor mounting.

Design H: ASEAN design and systems with the controller mounted on its own base frame.

All pumps are fitted with three-phase motors.

Dimensions may vary by ± 10 mm.

L1 dimensions indicates the total length according to the design (not manifold length).

Hydro MPC-S with CR, CRI 20

Number of pumps	Pump type	Voltage code	Motor [kW]	Max. I_N [A]	Connections	W [mm]	L1 [mm]	L2 [mm]	H1 [mm]	H2 [mm]	H3 [mm]	Weight [kg]	Design
2	CR 20-2	U4	2.2	4.5	DN 100	1150	1400	600	840	194	1505	801	H
	CR 20-3	U4	4	7.9	DN 80	1150	1400	600	992	194	1505	214	H
	CR 20-5	U4	5.5	11.2	DN 200	1150	1400	600	1082	194	1505	465	H
	CR 20-7	U4	7.5	15.2	DN 80	1150	1400	600	1160	194	1505	159	H
3	CR 20-2	U4	2.2	4.5	DN 200	1170	1720	600	840	194	1505	740	H
	CR 20-3	U4	4	7.9	DN 80	1170	1720	600	992	194	1505	195	H
	CR 20-5	U4	5.5	11.2	DN 100	1170	1070	960	1082	194	1505	634	H
	CR 20-7	U4	7.5	15.2	DN 80	1170	1070	960	1160	194	1505	495	H
4	CR 20-2	U4	2.2	4.5	R 2"	1170	2040	600	840	194	1505	859	H
	CR 20-3	U4	4	7.9	DN 80	1170	2040	600	992	194	1505	653	H
	CR 20-5	U4	5.5	11.2	DN 80	1170	640	960	1082	194	1505	936	H
	CR 20-7	U4	7.5	15.2	DN 100	1170	640	960	1160	194	1505	729	H
5	CR 20-2	U4	2.2	4.5	DN 250	1235	1710	760	840	194	1505	513	H
	CR 20-3	U4	4	7.9	DN 200	1235	1710	760	992	194	1505	672	H
	CR 20-5	U4	5.5	11.2	DN 100	1235	1710	960	1082	194	1505	990	H
	CR 20-7	U4	7.5	15.2	DN 250	1235	1710	960	1160	194	1505	707	H
6	CR 20-2	U4	2.2	4.5	R 2 1/2"	1235	960	760	840	194	1505	633	H
	CR 20-3	U4	4	7.9	DN 200	1235	960	760	992	194	1505	780	H
	CR 20-5	U4	5.5	11.2	DN 100	1235	960	960	1082	194	1505	1067	G
	CR 20-7	U4	7.5	15.2	DN 200	1235	960	960	1160	194	1505	854	H

Voltage code, U4: 3 x 380-415 V, PE, 50 Hz.

Design G: ASEAN design and systems with the controller mounted on its own base for floor mounting.

Design H: ASEAN design and systems with the controller mounted on its own base frame.

Dimensions may vary by ± 10 mm.

L1 dimensions indicates the total length according to the design (not manifold length).

Hydro MPC-E/-S with CR 32

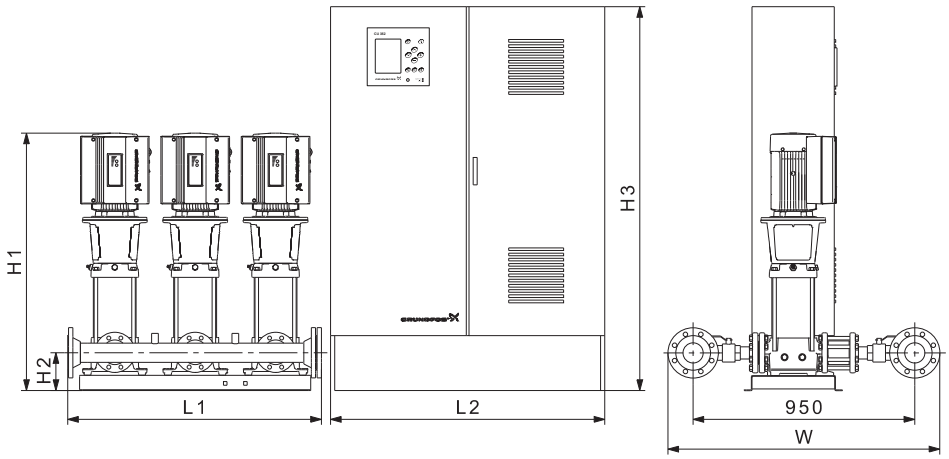

Dimensional sketch of a system with a floor-mounted controller (design G). The system is shown as an example. The pumps supplied may differ from the sketch.

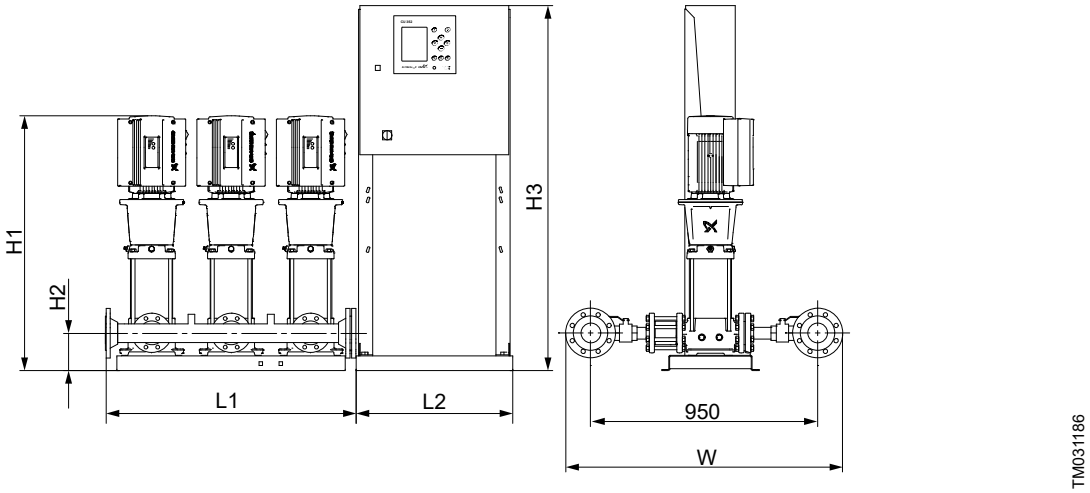

Dimensional sketch of a system with a controller mounted on a separate base frame (design H). The system is shown as an example. The pumps supplied may differ from the sketch.

Electrical data, dimensions and weights

Hydro MPC-E with CR 32

Number of pumps	Pump type	Voltage code	Motor [kW]	Max. I_N [A]	Connections	W [mm]	L1 [mm]	L2 [mm]	H1 [mm]	H2 [mm]	H3 [mm]	Weight [kg]	Design
2	CR 32-2	U4	4	7.9	DN 100	1170	1110	800	1051	209	1200	352	G
	CR 32-3	U4	5.5	11.0	DN 100	1170	1110	800	1140	209	1200	373	G
	CR 32-4	U4	7.5	14.2	DN 100	1170	1110	800	1198	209	1200	402	G
	CR 32-6	U4	11	20.2	DN 100	1170	1110	1200	1540	209	1800	676	G
	CR 32-7	U4	15	26.9	DN 100	1170	1110	1200	1610	209	1800	668	G
3	CR 32-2	U4	4	7.9	DN 150	1235	1610	800	1051	209	1200	520	G
	CR 32-3	U4	5.5	11.0	DN 150	1235	1610	800	1140	209	1200	554	G
	CR 32-4	U4	7.5	14.2	DN 150	1235	1610	800	1198	209	1200	593	G
	CR 32-6	U4	11	20.2	DN 150	1235	1610	1200	1540	209	1800	888	G
	CR 32-7	U4	15	26.9	DN 150	1235	1610	1200	1610	209	1800	882	G
4	CR 32-2	U4	4	7.9	DN 150	1235	2110	800	1051	209	1200	656	G
	CR 32-3	U4	5.5	11.0	DN 150	1235	2110	800	1140	209	1800	738	G
	CR 32-4	U4	7.5	14.2	DN 150	1235	2110	800	1198	209	1800	792	G
	CR 32-6	U4	11	20.2	DN 150	1235	2110	1200	1540	209	1800	1414	G
	CR 32-7	U4	15	26.9	DN 150	1235	2110	1200	1610	209	1800	1470	G
5	CR 32-2	U4	4	7.9	DN 150	1235	2610	800	1051	209	1200	803	G
	CR 32-3	U4	5.5	11.0	DN 150	1235	2610	1200	1140	209	1800	959	G
	CR 32-4	U4	7.5	14.2	DN 150	1235	2610	1200	1198	209	1800	1027	G
	CR 32-6	U4	11	20.2	DN 150	1235	2610	1200	1540	209	1800	1648	G
	CR 32-7	U4	15	26.9	DN 150	1235	2610	1200	1610	209	1800	1720	G
6	CR 32-2	U4	4	7.9	DN 150	1235	3110	800	1051	209	1200	931	G
	CR 32-3	U4	5.5	11.0	DN 150	1235	3110	1200	1140	209	1800	1101	G
	CR 32-4	U4	7.5	14.2	DN 150	1235	3110	1200	1198	209	1800	1233	G
	CR 32-6	U4	11	20.2	DN 150	1235	3110	1200	1540	209	1800	1901	G
	CR 32-7	U4	15	26.9	DN 150	1235	3110	1200	1610	209	1800	1876	G

Voltage code, U4: 3 x 380-415 V, PE, 50 Hz.

Design G: ASEAN design and systems with the controller mounted on its own base for floor mounting.

Dimensions may vary by ± 10 mm.

L1 dimensions indicates the total length according to the design (not manifold length).

Hydro MPC-S with CR 32

Number of pumps	Pump type	Voltage code	Motor [kW]	Max. I_N [A]	Connections	W [mm]	L1 [mm]	L2 [mm]	H1 [mm]	H2 [mm]	H3 [mm]	Weight [kg]	Design
2	CR 32-2	U4	4	7.9	DN 80	1170	1110	760	1051	209	1505	1229	H
	CR 32-3	U4	5.5	11.0	R 2"	1170	1110	760	1140	209	1505	1497	H
	CR 32-4	U4	7.5	14.2	DN 200	1170	1110	760	1198	209	1505	979	G
	CR 32-6	U4	11	20.2	DN 150	1170	1110	960	1540	209	1505	944	G
	CR 32-7	U4	15	26.9	DN 150	1170	1110	960	1610	209	1559	2579	H
3	CR 32-2	U4	4	7.9	DN 100	1235	1610	760	1051	209	1505	1465	H
	CR 32-3	U4	5.5	11.0	R 2 1/2"	1235	1610	960	1140	209	1505	1356	H
	CR 32-4	U4	7.5	14.2	DN 80	1235	1610	960	1198	209	1505	1352	H
	CR 32-6	U4	11	20.2	DN 150	1235	1610	960	1540	209	1505	1142	H
	CR 32-7	U4	15	26.9	DN 150	1235	1610	960	1610	209	1559	1247	H
4	CR 32-2	U4	4	7.9	DN 150	1235	1000	760	1051	209	1505	952	H
	CR 32-3	U4	5.5	11.0	DN 80	1235	1000	960	1140	209	1505	1662	H
	CR 32-4	U4	7.5	14.2	DN 250	1235	1000	960	1198	209	1505	1205	H
	CR 32-6	U4	11	20.2	DN 150	1235	1000	960	1540	209	1505	767	G
	CR 32-7	U4	15	26.9	DN 100	1235	1000	960	1610	209	1559	1721	H
5	CR 32-2	U4	4	7.9	R 2"	1235	2610	760	1051	209	1505	1080	H
	CR 32-3	U4	5.5	11.0	DN 100	1235	2610	960	1140	209	1505	1502	H
	CR 32-4	U4	7.5	14.2	R 2"	1235	2610	960	1198	209	1505	637	G
	CR 32-6	U4	11	20.2	DN 150	1235	2610	960	1540	209	1505	973	G
	CR 32-7	U4	15	26.9	DN 150	1235	2610	800	1610	209	1200	2186	H
6	CR 32-2	U4	4	7.9	R 2"	1235	1500	760	1051	209	1505	1281	H
	CR 32-3	U4	5.5	11.0	DN 100	1235	1500	960	1140	209	1505	1755	G
	CR 32-4	U4	7.5	14.2	R 2"	1235	1500	960	1198	209	1505	747	G
	CR 32-6	U4	11	20.2	DN 150	1235	3110	800	1540	209	1200	1192	G
	CR 32-7	U4	15	26.9	DN 150	1235	3110	800	1610	209	1200	2626	H

Voltage code, U4: 3 x 380-415 V, PE, 50 Hz.
Design G: ASEAN design and systems with the controller mounted on its own base for floor mounting.
Design H: ASEAN design and systems with the controller mounted on its own base frame.
All pumps are fitted with three-phase motors.
Dimensions may vary by ± 10 mm.
L1 dimensions indicates the total length according to the design (not manifold length).

Hydro MPC-F/-S with CR 45, CR 64

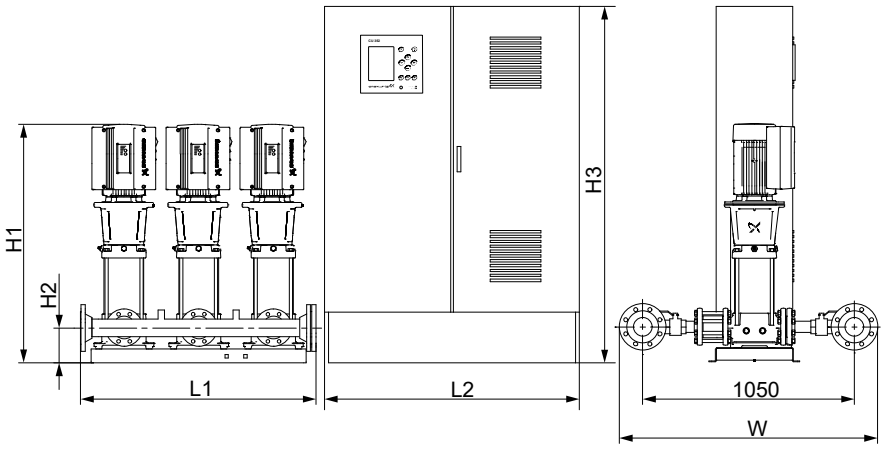

Dimensional sketch of a system with a floor-mounted controller (design G). The system is shown as an example. The pumps supplied may differ from the sketch.

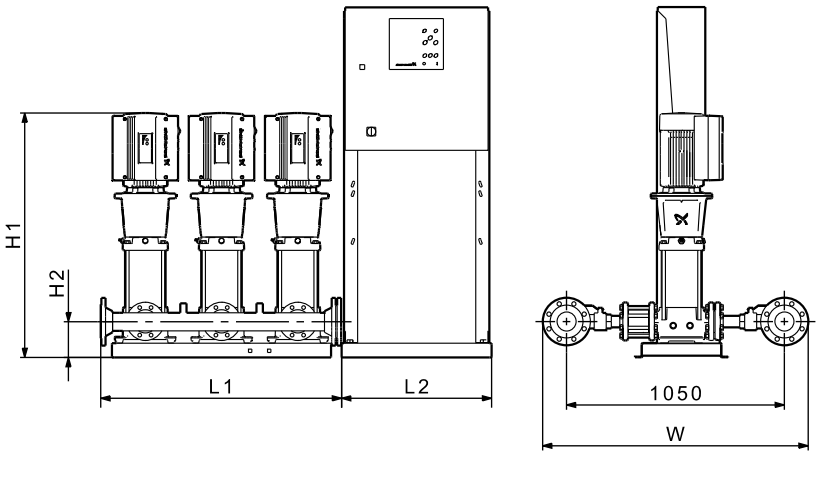

Dimensional sketch of a system with a controller mounted on a separate base frame (design H). The system is shown as an example. The pumps supplied may differ from the sketch.

Electrical data, dimensions and weights

Hydro MPC-E with CR 45

Number of pumps	Pump type	Voltage code	Motor [kW]	Max. I_N [A]	Connections	W [mm]	L1 [mm]	L2 [mm]	H1 [mm]	H2 [mm]	H3 [mm]	Weight [kg]	Design
3	CR 45-2-2	U4	5.5	11.0	DN 200	1390	1610	800	1134	244	1200	615	G
	CR 45-2	U4	7.5	14.2	DN 200	1390	1610	800	1122	244	1200	644	G
	CR 45-3	U4	11	20.2	DN 200	1390	1610	1200	1404	244	1800	933	G
	CR 45-4	U4	15	26.9	DN 200	1390	1610	1200	1484	244	1800	981	G
	CR 45-5	U4	18.5	33.4	DN 200	1390	1610	1200	1608	244	1800	1033	G
4	CR 45-2-2	U4	5.5	11.0	DN 200	1390	2110	800	1134	244	1800	814	G
	CR 45-2	U4	7.5	14.2	DN 200	1390	2110	800	1122	244	1800	856	G
	CR 45-3	U4	11	20.2	DN 200	1390	2110	1200	1404	244	1800	1469	G
	CR 45-4	U4	15	26.9	DN 200	1390	2110	1200	1484	244	1800	1110	G
	CR 45-5	U4	18.5	33.4	DN 200	1390	2110	1200	1608	244	1800	1611	G
5	CR 45-2-2	U4	5.5	11.0	DN 200	1390	1610	1200	1134	244	1800	1054	G
	CR 45-2	U4	7.5	14.2	DN 200	1390	2610	1200	1122	244	1800	1107	G
	CR 45-3	U4	11	20.2	DN 200	1390	2610	1200	1404	244	1800	1719	G
	CR 45-4	U4	15	26.9	DN 200	1390	2610	1200	1484	244	1800	1829	G
	CR 45-5	U4	18.5	33.4	DN 200	1390	2610	1200	1608	244	1800	1916	G
6	CR 45-2-2	U4	5.5	11.0	DN 200	1390	3110	1200	1134	244	1800	1212	G
	CR 45-2	U4	7.5	14.2	DN 200	1390	3110	1200	1122	244	1800	1326	G
	CR 45-3	U4	11	20.2	DN 200	1390	3110	1200	1404	244	1800	2035	G
	CR 45-4	U4	15	26.9	DN 200	1390	3110	1200	1484	244	1800	2075	G
	CR 45-5	U4	18.5	33.4	DN 200	1390	3110	1200	1608	244	1800	2150	G

Voltage code, U4: 3 x 380-415 V, PE, 50 Hz.
Design G: ASEAN design and systems with the controller mounted on its own base for floor mounting.
All pumps are fitted with three-phase motors.
Dimensions may vary by ± 10 mm.
L1 dimensions indicates the total length according to the design (not manifold length).

Hydro MPC-E with CR 64

Number of pumps	Pump type	Voltage code	Motor [kW]	Max. I_N [A]	Connections	W [mm]	L1 [mm]	L2 [mm]	H1 [mm]	H2 [mm]	H3 [mm]	Weight [kg]	Design
3	CR 64-1	U4	5.5	11.0	DN 200	1390	1610	800	1056	244	1200	612	G
	CR 64-2-2	U4	7.5	14.2	DN 200	1390	1610	800	1127	244	1200	655	G
	CR 64-2	U4	11	20.2	DN 200	1390	1610	1200	1329	244	1800	932	G
	CR 64-3-1	U4	15	26.9	DN 200	1390	1610	1200	1411	244	1800	982	G
	CR 64-4-2	U4	18.5	33.4	DN 200	1390	1610	1200	1538	244	1800	1035	G
	CR 64-4	U4	22	39.5	DN 200	1390	1610	1200	1564	244	1800	1419	G
	CR 64-5-1	U4	30	53.5	DN 200	1390	1610	1200	1716	244	1800	1798	G
4	CR 64-1	U4	5.5	11.0	DN 200	1390	2110	800	1056	244	1800	811	G
	CR 64-2-2	U4	7.5	14.2	DN 200	1390	2110	800	1127	244	1800	870	G
	CR 64-2	U4	11	20.2	DN 200	1390	2110	1200	1329	244	1800	1468	G
	CR 64-3-1	U4	15	26.9	DN 200	1390	2110	1200	1411	244	1800	1570	G
	CR 64-4-2	U4	18.5	33.4	DN 200	1390	2110	1200	1538	244	1800	1616	G
	CR 64-4	U4	22	39.5	DN 200	1390	2110	1200	1564	244	1800	1711	G
	CR 64-5-1	U4	30	53.5	DN 200	1390	2110	1200	1716	244	1800	2232	G
5	CR 64-1	U4	5.5	11.0	DN 200	1390	2610	1200	1056	244	1800	1050	G
	CR 64-2-2	U4	7.5	14.2	DN 200	1390	2610	1200	1127	244	1800	1123	G
	CR 64-2	U4	11	20.2	DN 200	1390	2610	1200	1329	244	1800	1715	G
	CR 64-3-1	U4	15	26.9	DN 200	1390	2610	1200	1411	244	1800	1868	G
	CR 64-4-2	U4	18.5	33.4	DN 200	1390	2610	1200	1538	244	1800	1924	G
	CR 64-4	U4	22	39.5	DN 200	1390	2610	1200	1564	244	1800	2025	G
	CR 64-5-1	U4	30	53.5	DN 200	1390	2610	1200	1716	244	1800	2677	G
6	CR 64-1	U4	5.5	11.0	DN 200	1390	3110	1200	1056	244	1800	1207	G
	CR 64-2-2	U4	7.5	14.2	DN 200	1390	3110	1200	1127	244	1800	1301	G
	CR 64-2	U4	11	20.2	DN 200	1390	3110	1200	1329	244	1800	1979	G
	CR 64-3-1	U4	15	26.9	DN 200	1390	3110	1200	1411	244	1800	2115	G
	CR 64-4-2	U4	18.5	33.4	DN 200	1390	3110	1200	1538	244	1800	2262	G
	CR 64-4	U4	22	39.5	DN 200	1390	3110	1200	1564	244	1800	2347	G
	CR 64-5-1	U4	30	53.5	DN 200	1390	3110	1200	1716	244	1800	2671	G

Voltage code, U4: 3 x 380-415 V, PE, 50 Hz.
Design G: ASEAN design and systems with the controller mounted on its own base for floor mounting.
All pumps are fitted with three-phase motors.
Dimensions may vary by ± 10 mm.
L1 dimensions indicates the total length according to the design (not manifold length).

Hydro MPC-S with CR 64

Number of pumps	Pump type	Voltage code	Motor [kW]	Max. I_N [A]	Connections	W [mm]	L1 [mm]	L2 [mm]	H1 [mm]	H2 [mm]	H3 [mm]	Weight [kg]	Design
3	CR 64-1	U4	5.5	11.0	DN 200	1390	1610	960	1056	244	1505	2376	H
	CR 64-2-2	U4	7.5	14.2	DN 200	1390	1610	960	1127	244	1505	2577	H
	CR 64-2	U4	11	20.2	DN 200	1390	1610	960	1329	244	1505	2566	G
	CR 64-3-1	U4	15	26.9	DN 150	1390	1610	960	1411	244	1505	1427	G
	CR 64-4-2	U4	18.5	33.4	DN 150	1390	1610	960	1538	244	1505	1810	G
	CR 64-4	U4	22	39.5	DN 200	1390	1610	960	1564	244	1559	2987	G
	CR 64-5-1	U4	30	53.5	DN 200	1390	1610	800	1716	244	1505	2987	G
4	CR 64-1	U4	5.5	11.0	DN 200	1390	1000	960	1056	244	1505	2810	H
	CR 64-2-2	U4	7.5	14.2	DN 200	1390	1000	960	1127	244	1505	3010	H
	CR 64-2	U4	11	20.2	DN 200	1390	1000	960	1329	244	1505	3013	H
	CR 64-3-1	U4	15	26.9	DN 200	1390	1000	960	1411	244	1505	2403	H
	CR 64-4-2	U4	18.5	33.4	DN 200	1390	2110	800	1538	244	1200	2829	H
	CR 64-4	U4	22	39.5	DN 200	1390	2110	800	1564	244	1200	2959	H
	CR 64-5-1	U4	30	53.5	DN 200	1390	2110	800	1716	244	1800	2959	H
5	CR 64-1	U4	5.5	11.0	DN 200	1390	2610	960	1056	244	1505	1456	H
	CR 64-2-2	U4	7.5	14.2	DN 200	1390	2610	960	1127	244	1505	1456	G
	CR 64-2	U4	11	20.2	DN 200	1390	2610	960	1329	244	1505	2966	G
	CR 64-3-1	U4	15	26.9	DN 200	1390	2610	800	1411	244	1200	1399	G
	CR 64-4-2	U4	18.5	33.4	DN 200	1390	2610	800	1538	244	1200	1724	G
	CR 64-4	U4	22	39.5	DN 200	1390	2610	1000	1564	244	1800	2966	H
	CR 64-5-1	U4	30	53.5	DN 200	1390	2610	1200	1716	244	1800	2966	G
6	CR 64-1	U4	5.5	11.0	DN 200	1390	1500	960	1056	244	1505	2076	G
	CR 64-2-2	U4	7.5	14.2	DN 200	1390	1500	960	1127	244	1505	2076	G
	CR 64-2	U4	11	20.2	DN 200	1390	3110	800	1329	244	1200	2929	G
	CR 64-3-1	U4	15	26.9	DN 200	1390	3110	800	1411	244	1200	1711	G
	CR 64-4	U4	18.5	33.4	DN 200	1390	3110	1000	1538	244	1800	1297	G
	CR 64-4	U4	22	39.5	DN 200	1390	3110	1000	1564	244	1800	2929	G
	CR 64-5-1	U4	30	53.5	DN 200	1390	3110	1600	1716	244	1800	2929	G

Voltage code, U4: 3 x 380-415 V, PE, 50 Hz.
Design G: ASEAN design and systems with the controller mounted on its own base for floor mounting.
Design H: ASEAN design and systems with the controller mounted on its own base frame.
All pumps are fitted with three-phase motors.
Dimensions may vary by ± 10 mm.
L1 dimensions indicates the total length according to the design (not manifold length).

Hydro MPC-E/-S with CR 90

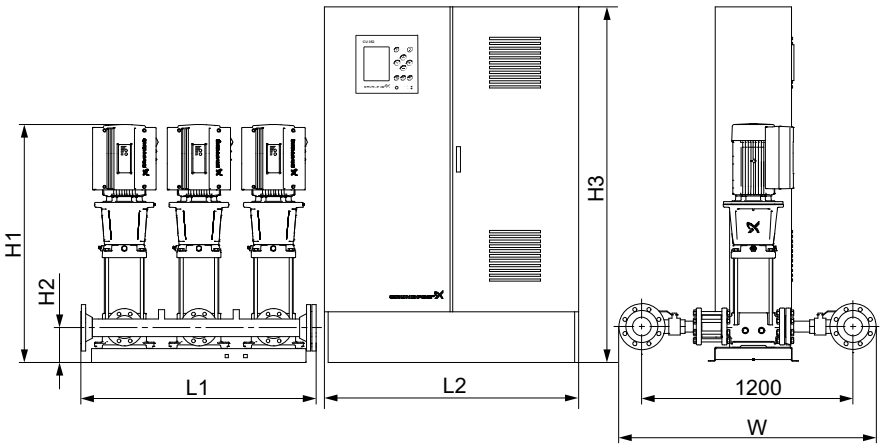

Dimensional sketch of a system with a floor-mounted controller (design G). The system is shown as an example. The pumps supplied may differ from the sketch.

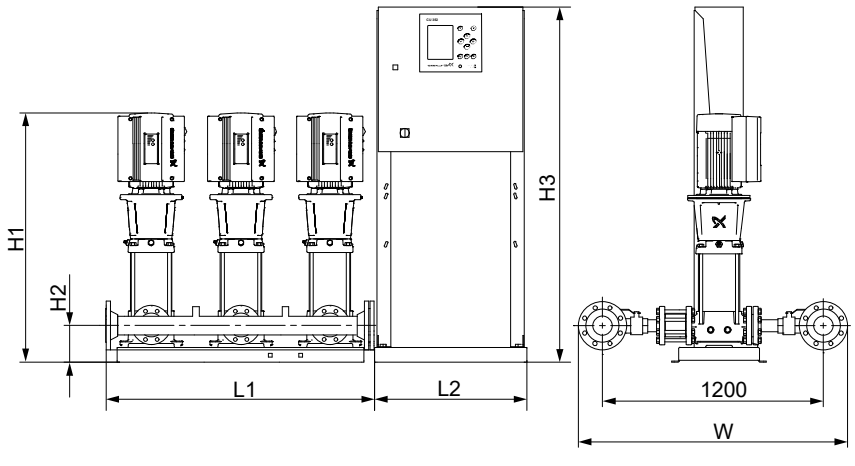

Dimensional sketch of a system with a controller mounted on a separate base frame (design H). The system is shown as an example. The pumps supplied may differ from the sketch.

Electrical data, dimensions and weights

Hydro MPC-E with CR 90

Number of pumps	Pump type	Voltage code	Motor [kW]	Max. I_N [A]	Connections	W [mm]	L1 [mm]	L2 [mm]	H1 [mm]	H2 [mm]	H3 [mm]	Weight [kg]	Design
3	CR 90-2-2	U4	11	22.2	DN 200	1540	1610	1200	1348	244	1800	958	G
	CR 90-2	U4	15	29.6	DN 200	1540	1610	1200	1348	244	1800	994	G
	CR 90-3-2	U4	18.5	36.6	DN 200	1540	1610	1200	1484	244	1800	1050	G
	CR 90-3	U4	22	43.5	DN 200	1540	1610	1200	1510	244	1800	1433	G
	CR 90-4	U4	30	56.0	DN 200	1540	1610	1200	1672	244	1800	1813	G
	CR 90-4-2	U4	30	56.0	DN 200	1540	1610	1200	1672	244	1800	1813	G
4	CR 90-2-2	U4	11	22.2	DN 250	1605	2110	1200	1348	244	1800	1599	G
	CR 90-2	U4	15	29.6	DN 250	1605	2110	1200	1348	244	1800	1652	G
	CR 90-3-2	U4	18.5	36.6	DN 250	1605	2110	1200	1484	244	1800	1706	G
	CR 90-3	U4	22	43.5	DN 250	1605	2110	1200	1510	244	1800	1836	G
	CR 90-4	U4	30	56.0	DN 250	1605	2110	1200	1672	244	1800	2349	G
	CR 90-4-2	U4	30	56.0	DN 250	1605	2110	1200	1672	244	1800	2349	G
5	CR 90-2-2	U4	11	22.2	DN 250	1605	2610	1200	1348	244	1800	1909	G
	CR 90-2	U4	15	29.6	DN 250	1605	2610	1200	1348	244	1800	2003	G
	CR 90-3-2	U4	18.5	36.6	DN 250	1605	2610	1200	1484	244	1800	2096	G
	CR 90-3	U4	22	43.5	DN 250	1605	2610	1200	1510	244	1800	2280	G
	CR 90-4	U4	30	56.0	DN 250	1605	2610	1200	1672	244	1800	2934	G
	CR 90-4-2	U4	30	56.0	DN 250	1605	2610	1200	1672	244	1800	2854	G
6	CR 90-2-2	U4	11	22.2	DN 250	1605	3110	1200	1348	244	1800	2191	G
	CR 90-2	U4	15	29.6	DN 250	1605	3110	1200	1348	244	1800	2262	G
	CR 90-3-2	U4	18.5	36.6	DN 250	1605	3110	1200	1484	244	1800	2346	G
	CR 90-3	U4	22	43.5	DN 250	1605	3110	1200	1510	244	1800	2619	G
	CR 90-4	U4	30	56.0	DN 250	1605	3110	1200	1672	244	1800	3425	G
	CR 90-4-2	U4	30	56.0	DN 250	1605	3110	1200	1672	244	1800	2853	G

Voltage code, U4: 3 x 380-415 V, PE, 50 Hz.
Design G: ASEAN design and systems with the controller mounted on its own base for floor mounting.
All pumps are fitted with three-phase motors.
Dimensions may vary by ± 10 mm.
L1 dimensions indicates the total length according to the design (not manifold length).

Hydro MPC-S with CR 90

Number of pumps	Pump type	Voltage code	Motor [kW]	Max. I_N [A]	Connections	W [mm]	L1 [mm]	L2 [mm]	H1 [mm]	H2 [mm]	H3 [mm]	Weight [kg]	Design
3	CR 90-2-2	U4	11	20.2	DN 200	1540	1610	960	1348	244	1505	2985	G
	CR 90-2	U4	15	26.9	DN 200	1540	1610	960	1348	244	1505	2985	G
	CR 90-3-2	U4	18.5	33.4	DN 200	1540	1610	960	1484	244	1505	2985	G
	CR 90-3	U4	22	39.5	DN 200	1540	1610	960	1510	244	1505	1560	H
	CR 90-4	U4	30	53.5	DN 200	1540	1610	800	1672	244	1559	951	H
	CR 90-4-2	U4	30	53.5	DN 200	1540	1610	800	1672	244	1559	2985	H
4	CR 90-2-2	U4	11	20.2	DN 250	1605	1000	960	1348	244	1505	2991	H
	CR 90-2	U4	15	26.9	DN 250	1605	1000	960	1348	244	1505	2991	H
	CR 90-3-2	U4	18.5	33.4	DN 250	1605	2110	800	1484	244	1200	2937	G
	CR 90-3	U4	22	39.5	DN 200	1605	2110	800	1510	244	1200	1767	G
	CR 90-4	U4	30	53.5	DN 200	1605	2110	800	1672	244	1800	1260	G
	CR 90-4-2	U4	30	53.5	DN 250	1605	2110	800	1672	244	1800	2937	G
5	CR 90-2-2	U4	11	20.2	DN 250	1605	2610	960	1348	244	1505	2958	H
	CR 90-2	U4	15	26.9	DN 250	1605	2610	800	1348	244	1200	2957	G
	CR 90-3-2	U4	18.5	33.4	DN 250	1605	2610	800	1484	244	1200	2957	G
	CR 90-3	U4	22	39.5	DN 200	1605	2610	1000	1510	244	1800	1604	G
	CR 90-4	U4	30	53.5	DN 200	1605	2610	1200	1672	244	1800	1980	G
	CR 90-4-2	U4	30	53.5	DN 250	1605	2610	1200	1672	244	1800	2957	G
6	CR 90-2-2	U4	11	20.2	DN 250	1605	3110	800	1348	244	1200	2927	G
	CR 90-2	U4	15	26.9	DN 250	1605	3110	800	1348	244	1200	2927	G
	CR 90-3-2	U4	18.5	33.4	DN 250	1605	3110	1000	1484	244	1800	2927	G
	CR 90-3	U4	22	39.5	DN 200	1605	3110	1000	1510	244	1800	1931	G
	CR 90-4	U4	30	53.5	DN 200	1605	3110	1600	1672	244	1800	1803	G
	CR 90-4-2	U4	30	53.5	DN 250	1605	3110	1600	1672	244	1800	2927	G

Voltage code, U4: 3 x 380-415 V, PE, 50 Hz.
Design G: ASEAN design and systems with the controller mounted on its own base for floor mounting.
Design H: ASEAN design and systems with the controller mounted on its own base frame.
All pumps are fitted with three-phase motors.
Dimensions may vary by ± 10 mm.

11. Technical data, Hydro MPC-E/-S , 60 Hz

Hydro MPC-E/-S with CR, CRI 3, CR, CRI 5

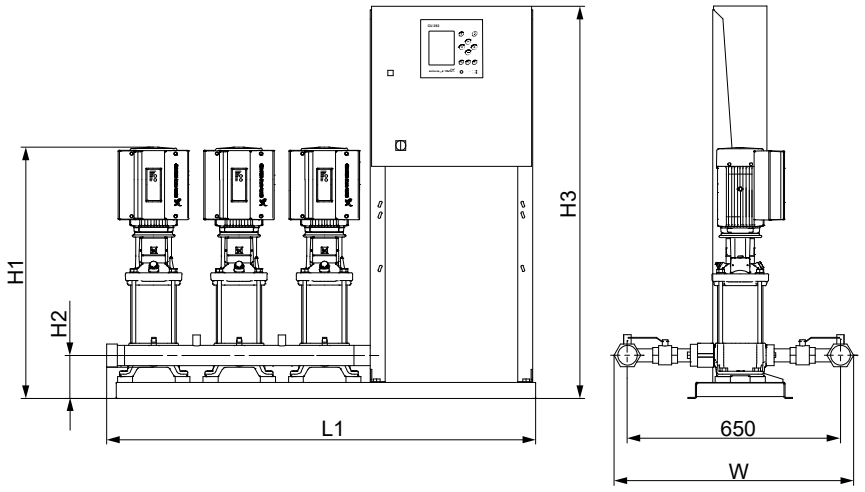

Dimensional sketch of a system with a controller mounted on the same base frame as the pumps (design E). The system is shown as an example. The pumps supplied may differ from the sketch.

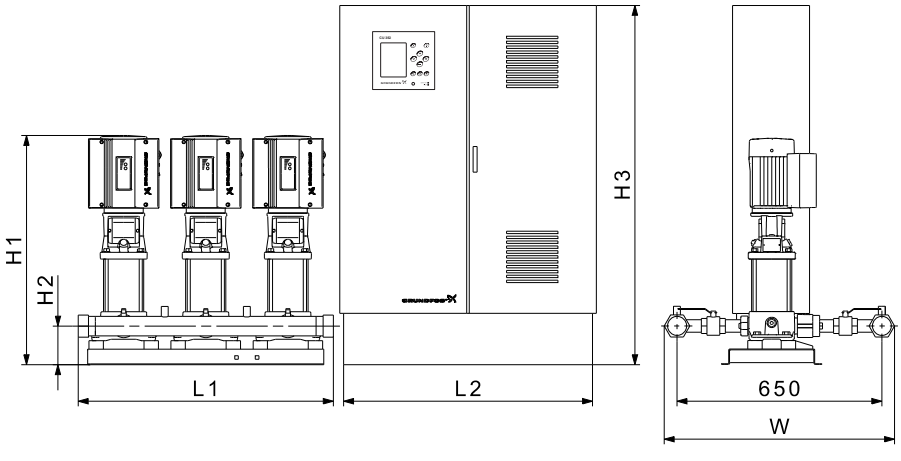

Dimensional sketch of a system with a floor-mounted controller (design G). The system is shown as an example. The pumps supplied may differ from the sketch.

Electrical data, dimensions and weights

Hydro MPC-E with CR, CRI 3

Number of pumps	Pump type	Voltage code	Motor [kW]	Max. I_N [A]	Connections	W [mm]	L1 [mm]	L2 [mm]	H1 [mm]	H2 [mm]	H3 [mm]	Weight [kg]	Design
2	CR 3-4	U4	0.55	1.2	R 2"	714	750	800	567	154	1200	713	G
	CR 3-5	U4	0.75	1.6	R 2"	714	3110	800	631	154	1200	178	G
	CR 3-8	U4	1.1	2.3	R 2"	714	1110	800	705	154	1200	189	G
	CR 3-11	U4	1.5	2.9	R 2"	714	2610	800	805	154	1200	202	G
3	CR 3-4	U4	0.55	1.2	R 2"	714	1070	800	567	154	1200	431	G
	CR 3-5	U4	0.75	1.6	R 2"	714	2110	800	631	154	1200	228	G
	CR 3-8	U4	1.1	2.3	R 2"	714	2610	800	705	154	1200	245	G
	CR 3-11	U4	1.5	2.9	R 2"	714	1610	800	805	154	1200	264	G
4	CR 3-4	U4	0.55	1.2	R 2 1/2"	730	1390	800	567	154	1200	402	G
	CR 3-5	U4	0.75	1.6	R 2 1/2"	730	1610	800	631	154	1200	265	G
	CR 3-8	U4	1.1	2.3	R 2 1/2"	730	2110	800	705	154	1200	272	G
	CR 3-11	U4	1.5	2.9	R 2 1/2"	730	3110	800	805	154	1200	311	G

Voltage code, U4: 3 x 380-415 V, PE, 50 Hz.
Design G: ASEAN design and systems with the controller mounted on its own base for floor mounting.
Dimensions may vary by ± 10 mm.
L1 dimensions indicates the total length according to the design (not manifold length).

Hydro MPC-S with CR, CRI 3

Number of pumps	Pump type	Voltage code	Motor [kW]	Max. I_N [A]	Connections	W [mm]	L1 [mm]	L2 [mm]	H1 [mm]	H2 [mm]	H3 [mm]	Weight [kg]	Design
2	CR 3-4	U6	0.55	1.2	R 2"	714	1200	380	567	154	1505	369	E
	CR 3-5	U6	0.75	1.7	R 2"	714	1200	380	631	154	1505	106	E
	CR 3-8	U6	1.1	2.4	R 2"	714	1200	380	705	154	1505	140	E
	CR 3-11	UA	1.5	3.0	R 2"	714	1200	380	805	154	1505	95	E
3	CR 3-4	U6	0.55	1.2	R 2"	714	1720	600	567	154	1505	441	E
	CR 3-5	U6	0.75	1.7	R 2"	714	1720	600	631	154	1505	215	E
	CR 3-8	U6	1.1	2.4	R 2"	714	1720	600	705	154	1505	161	E
	CR 3-11	UA	1.5	3.0	R 2"	714	1720	600	805	154	1505	164	E
4	CR 3-4	U6	0.55	1.2	R 2 1/2"	730	2040	600	567	154	1505	389	E
	CR 3-5	U6	0.75	1.7	R 2 1/2"	730	2040	600	631	154	1505	199	E
	CR 3-8	U6	1.1	2.4	R 2 1/2"	730	2040	600	705	154	1505	224	E
	CR 3-11	UA	1.5	3.0	R 2 1/2"	730	2040	600	805	154	1505	271	E

Voltage code, U6: 3 x 380-415 V, PE, 60 Hz.
Voltage code, UA: 3 x 440-480 V, PE, 60 Hz.
Design E: ASEAN design and systems with the controller mounted on the same base frame as the pumps.
Dimensions may vary by ± 10 mm.
L1 dimensions indicates the total length according to the design (not manifold length).

Hydro MPC-E with CR, CRI 5

Number of pumps	Pump type	Voltage code	Motor [kW]	Max. I_N [A]	Connections	W [mm]	L1 [mm]	L2 [mm]	H1 [mm]	H2 [mm]	H3 [mm]	Weight [kg]	Design
2	CR 5-4	U4	1.1	2.3	R 2"	714	2110	800	669	154	1200	188	G
	CR 5-5	U4	1.5	2.9	R 2"	714	2610	800	742	154	1200	342	G
	CR 5-9	U4	2.2	4.0	R 2"	714	2610	800	890	154	1200	232	G
	CR 5-12	U4	3	5.7	R 2"	714	1610	800	989	154	1200	223	G
3	CR 5-4	U4	1.1	2.3	R 2"	714	2610	800	669	154	1200	233	G
	CR 5-5	U4	1.5	2.9	R 2"	714	1070	800	742	154	1200	369	G
	CR 5-9	U4	2.2	4.0	R 2"	714	3110	800	890	154	1200	269	G
	CR 5-12	U4	3	5.7	R 2"	714	3110	800	989	154	1200	285	G
4	CR 5-4	U4	1.1	2.3	R 2 1/2"	730	3110	800	669	154	1200	338	G
	CR 5-5	U4	1.5	2.9	R 2 1/2"	730	1610	800	742	154	1200	432	G
	CR 5-9	U4	2.2	4.0	R 2 1/2"	730	2110	800	890	154	1200	311	G
	CR 5-12	U4	3	5.7	R 2 1/2"	730	2610	800	989	154	1200	311	G

Voltage code, U4: 3 x 380-415 V, PE, 50 Hz.
Design G: ASEAN design and systems with the controller mounted on its own base for floor mounting.
Dimensions may vary by ± 10 mm.
L1 dimensions indicates the total length according to the design (not manifold length).

Hydro MPC-S with CR, CRI 5

Number of pumps	Pump type	Voltage code	Motor [kW]	Max. I_N [A]	Connections	W [mm]	L1 [mm]	L2 [mm]	H1 [mm]	H2 [mm]	H3 [mm]	Weight [kg]	Design
2	CR 5-4	U6	1.1	2.4	R 2"	714	1200	380	669	154	1505	148	E
	CR 5-5	U6	1.5	3.0	R 2"	714	1200	380	742	154	1505	180	E
	CR 5-9	UA	2.2	4.3	R 2"	714	1400	600	890	154	1505	407	E
	CR 5-12	UA	3	6.0	R 2"	714	1200	380	989	154	1505	104	E
3	CR 5-4	U6	1.1	2.4	R 2"	714	1720	600	669	154	1505	504	E
	CR 5-5	U6	1.5	3.0	R 2"	714	1720	600	742	154	1505	414	E
	CR 5-9	UA	2.2	4.3	R 2"	714	1720	600	890	154	1505	663	E
	CR 5-12	UA	3	6.0	R 2"	714	1720	600	989	154	1505	196	E
4	CR 5-4	U6	1.1	2.4	R 2 1/2"	730	2040	600	669	154	1505	117	E
	CR 5-5	U6	1.5	3.0	R 2 1/2"	730	2040	600	742	154	1505	178	E
	CR 5-9	UA	2.2	4.3	R 2 1/2"	730	2040	600	890	154	1505	276	E
	CR 5-12	UA	3	6.0	R 2 1/2"	730	2040	600	989	154	1505	246	E

Voltage code, U6: 3 x 380-415 V, PE, 60 Hz.
Voltage code, UA: 3 x 440-480 V, PE, 60 Hz.
Design E: ASEAN design and systems with the controller mounted on the same base frame as the pumps.
Dimensions may vary by ± 10 mm.
L1 dimensions indicates the total length according to the design (not manifold length).

Hydro MPC-E/-S with CR, CRI 10

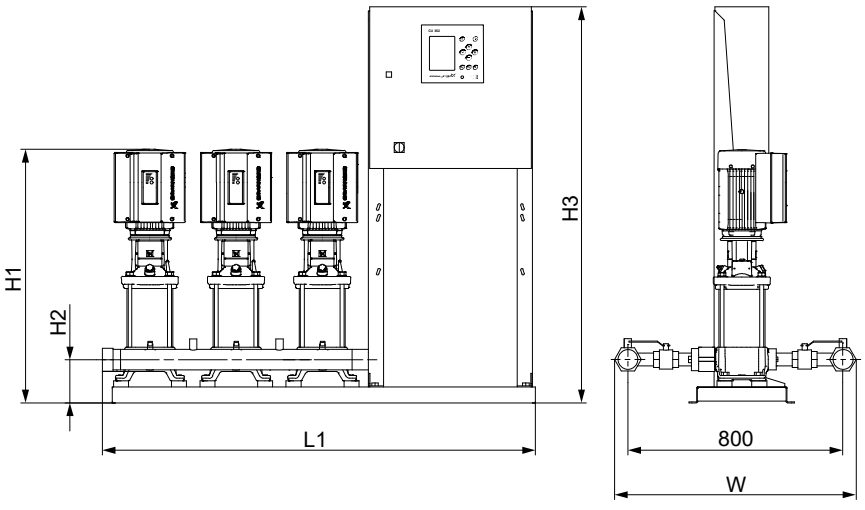

Dimensional sketch of a system with a controller mounted on the same base frame as the pumps (design E). The system is shown as an example. The pumps supplied may differ from the sketch.

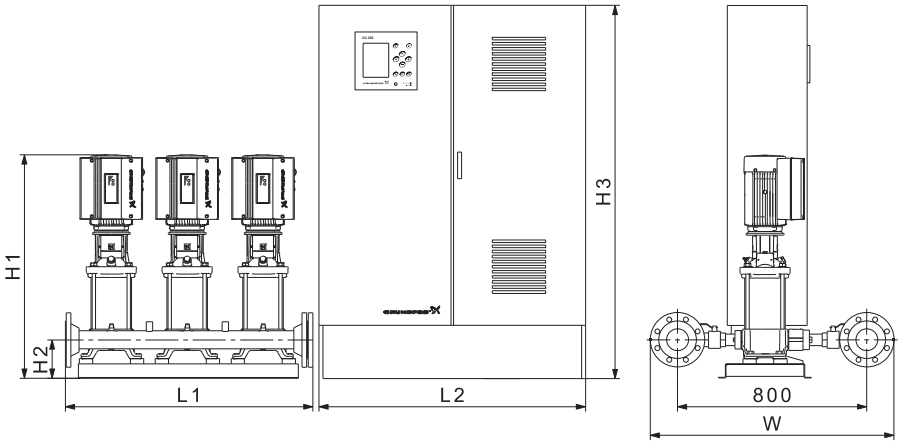

Dimensional sketch of a system with a floor-mounted controller (design G). The system is shown as an example. The pumps supplied may differ from the sketch.

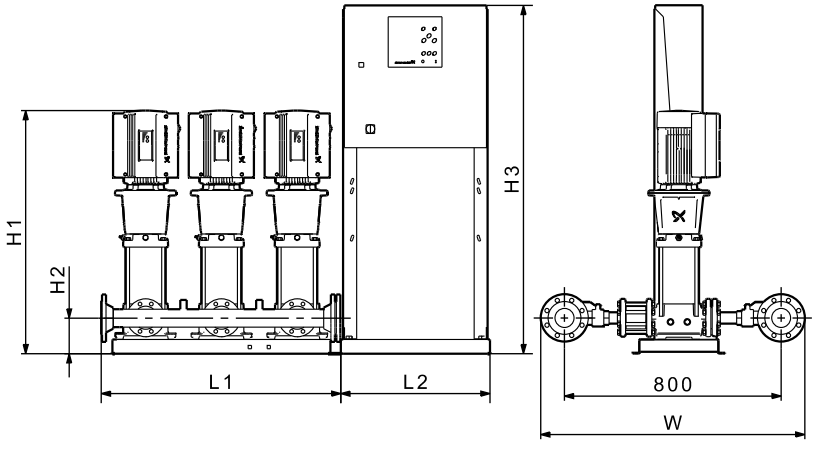

Dimensional sketch of a system with a controller mounted on a separate base frame (design H). The system is shown as an example. The pumps supplied may differ from the sketch.

Electrical data, dimensions and weights

Hydro MPC-E with CR, CRI 10

Number of pumps	Pump type	Voltage code	Motor [kW]	Max. I_N [A]	Connections	W [mm]	L1 [mm]	L2 [mm]	H1 [mm]	H2 [mm]	H3 [mm]	Weight [kg]	Design
2	CR 10-2	U4	1.5	2.9	R 2 1/2"	880	2030	800	748	184	1200	231	G
	CR 10-3	U4	2.2	4.0	R 2 1/2"	880	3110	800	818	184	1200	415	G
	CR 10-5	U4	3	5.7	R 2 1/2"	880	1710	800	897	184	1200	251	G
	CR 10-6	U4	4	7.2	R 2 1/2"	880	2030	800	964	184	1200	298	G
	CR 10-9	U4	5.5	9.8	R 2 1/2"	880	750	800	1105	184	1200	399	G
3	CR 10-2	U4	1.5	2.9	DN 80	1000	1610	800	748	184	1200	327	G
	CR 10-3	U4	2.2	4.0	DN 80	1000	1070	800	818	184	1200	509	G
	CR 10-5	U4	3	5.7	DN 80	1000	2110	800	897	184	1200	403	G
	CR 10-6	U4	4	7.2	DN 80	1000	2610	800	964	184	1200	397	G
	CR 10-9	U4	5.5	9.8	DN 80	1000	1610	800	1105	184	1200	531	G
4	CR 10-2	U4	1.5	2.9	DN 100	1020	2610	800	748	184	1200	396	G
	CR 10-3	U4	2.2	4.0	DN 100	1020	3110	800	818	184	1200	527	G
	CR 10-5	U4	3	5.7	DN 100	1020	2610	800	897	184	1200	527	G
	CR 10-6	U4	4	7.2	DN 100	1020	3110	800	964	184	1200	579	G
	CR 10-9	U4	5.5	9.8	DN 100	1020	2110	800	1105	184	1800	628	G
5	CR 10-2	U4	1.5	2.9	DN 80	1000	1710	800	748	184	1200	891	G
	CR 10-3	U4	2.2	4.0	DN 80	1000	1710	800	818	184	1200	946	G
	CR 10-5	U4	3	5.7	DN 80	1000	1710	800	897	184	1200	939	G
	CR 10-6	U4	4	7.2	DN 80	1000	1710	800	964	184	1200	1072	G
	CR 10-9	U4	5.5	9.8	DN 80	1000	1710	1200	1105	184	1800	733	G
6	CR 10-2	U4	1.5	2.9	DN 100	1020	2030	800	748	184	1200	920	G
	CR 10-3	U4	2.2	4.0	DN 100	1020	2030	800	818	184	1200	1041	G
	CR 10-5	U4	3	5.7	DN 100	1020	2030	800	897	184	1200	1029	G
	CR 10-6	U4	4	7.2	DN 100	1020	2030	800	964	184	1200	1230	G
	CR 10-9	U4	5.5	9.8	DN 100	1020	2030	1200	1105	184	1800	852	G

Voltage code, U4: 3 x 380-415 V, PE, 50 Hz.
Design G: ASEAN design and systems with the controller mounted on its own base for floor mounting.
Dimensions may vary by ± 10 mm.
L1 dimensions indicates the total length according to the design (not manifold length).

Hydro MPC-S with CR, CRI 10

Number of pumps	Pump type	Voltage code	Motor [kW]	Max. I_N [A]	Connections	W [mm]	L1 [mm]	L2 [mm]	H1 [mm]	H2 [mm]	H3 [mm]	Weight [kg]	Design
2	CR 10-2	U6	1.5	3.0	R 2 1/2"	880	1200	380	748	184	1505	149	E
	CR 10-3	U6	2.2	4.3	R 2 1/2"	880	1400	600	818	184	1505	256	E
	CR 10-5	U6	3	6.0	R 2 1/2"	880	1200	380	897	184	1505	169	E
	CR 10-6	U6	4	7.6	R 2 1/2"	880	1400	600	964	184	1505	216	E
	CR 10-9	U6	5.5	10.3	R 2 1/2"	880	1400	600	1105	184	1505	617	E
3	CR 10-2	U6	1.5	3.0	DN 80	1000	1720	600	748	184	1505	274	E
	CR 10-3	U6	2.2	4.3	DN 80	1000	1720	600	818	184	1505	532	E
	CR 10-5	U6	3	6.0	DN 80	1000	1720	600	897	184	1505	313	E
	CR 10-6	U6	4	7.6	DN 80	1000	1720	600	964	184	1505	420	E
	CR 10-9	U6	5.5	10.3	DN 80	1000	2460	760	1105	184	1505	747	E
4	CR 10-2	U6	1.5	3.0	DN 100	1020	2040	600	748	184	1505	341	E
	CR 10-3	U6	2.2	4.3	DN 100	1020	2040	600	818	184	1505	394	E
	CR 10-5	U6	3	6.0	DN 100	1020	2040	600	897	184	1505	414	E
	CR 10-6	U6	4	7.6	DN 100	1020	2040	600	964	184	1505	526	E
	CR 10-9	U6	5.5	10.3	DN 100	1020	2110	960	1105	184	1505	536	H
5	CR 10-2	U6	1.5	3.0	DN 80	1000	1710	760	748	184	1505	463	H
	CR 10-3	U6	2.2	4.3	DN 80	1000	1710	760	818	184	1505	502	H
	CR 10-5	U6	3	6.0	DN 80	1000	1710	760	897	184	1505	583	H
	CR 10-6	U6	4	7.6	DN 80	1000	1710	760	964	184	1505	410	H
	CR 10-9	U6	5.5	10.3	DN 80	1000	1710	960	1105	184	1505	629	H
6	CR 10-2	U6	1.5	3.0	DN 100	1020	2030	760	748	184	1505	420	H
	CR 10-3	U6	2.2	4.3	DN 100	1020	2030	760	818	184	1505	490	H
	CR 10-5	U6	3	6.0	DN 100	1020	2030	760	897	184	1505	261	H
	CR 10-6	U6	4	7.6	DN 100	1020	2030	760	964	184	1505	514	H
	CR 10-9	U6	5.5	10.3	DN 100	1020	2030	960	1105	184	1505	653	H

Voltage code, U6: 3 x 380-415 V, PE, 60 Hz.
Design E: ASEAN design and systems with the controller mounted on the same base frame as the pumps.
Design H: ASEAN design and systems with the controller mounted on its own base frame.
Dimensions may vary by ± 10 mm.
L1 dimensions indicates the total length according to the design (not manifold length).

Hydro MPC-E/-S with CR, CRI 15, CR, CRI 20

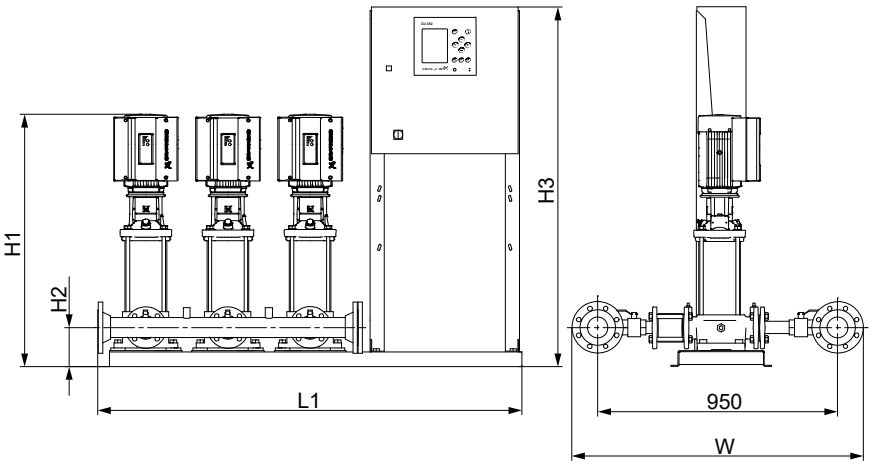

TM031184

Dimensional sketch of a system with a controller mounted on the same base frame as the pumps (design E). The system is shown as an example. The pumps supplied may differ from the sketch.

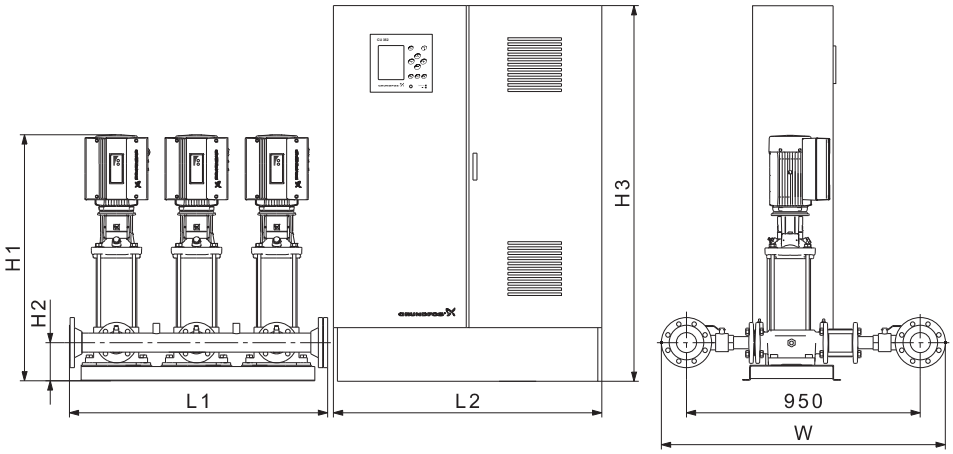

TM033045

Dimensional sketch of a system with a floor-mounted controller (design G). The system is shown as an example. The pumps supplied may differ from the sketch.

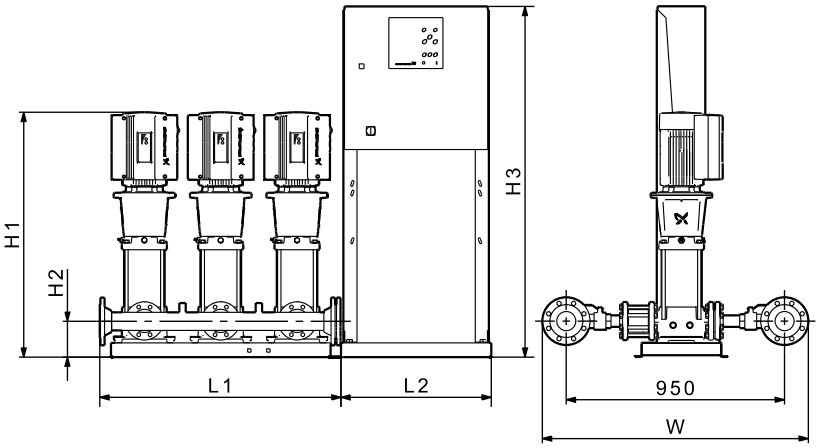

TM047832

Dimensional sketch of a system with a controller mounted on a separate base frame (design H). The system is shown as an example. The pumps supplied may differ from the sketch.

Electrical data, dimensions and weights

Hydro MPC-E with CR, CRI 15

Number of pumps	Pump type	Voltage code	Motor [kW]	Max. I_N [A]	Connections	W [mm]	L1 [mm]	L2 [mm]	H1 [mm]	H2 [mm]	H3 [mm]	Weight [kg]	Design
2	CR 15-3	U4	4	7.2	DN 80	1150	1710	800	941	194	1200	322	G
	CR 15-4	U4	5.5	9.8	DN 80	1150	2030	800	1037	194	1200	355	G
	CR 15-5	U4	7.5	12.9	DN 80	1150	2610	800	1070	194	1200	372	G
3	CR 15-3	U4	4	7.2	DN 100	1170	1070	800	941	194	1200	622	G
	CR 15-4	U4	5.5	9.8	DN 100	1170	3110	800	1037	194	1200	493	G
	CR 15-5	U4	7.5	12.9	DN 100	1170	2610	800	1070	194	1200	527	G
4	CR 15-3	U4	4	7.2	DN 100	1170	1610	800	941	194	1200	511	G
	CR 15-4	U4	5.5	9.8	DN 100	1170	2110	800	1037	194	1800	620	G
	CR 15-5	U4	7.5	12.9	DN 100	1170	2610	800	1070	194	1800	665	G
5	CR 15-3	U4	4	7.2	DN 150	1235	1710	800	941	194	1200	780	G
	CR 15-4	U4	5.5	9.8	DN 150	1235	1710	1200	1037	194	1800	710	G
	CR 15-5	U4	7.5	12.9	DN 150	1235	1710	1200	1070	194	1800	790	G
6	CR 15-3	U4	4	7.2	DN 150	1235	2030	800	941	194	1200	1140	G
	CR 15-4	U4	5.5	9.8	DN 150	1235	2030	1200	1037	194	1800	1245	G
	CR 15-5	U4	7.5	12.9	DN 150	1235	2030	1200	1070	194	1800	1031	G

Voltage code, U4: 3 x 380-415 V, PE, 50 Hz.
Design G: ASEAN design and systems with the controller mounted on its own base for floor mounting.
Dimensions may vary by ± 10 mm.
L1 dimensions indicates the total length according to the design (not manifold length).

Hydro MPC-S with CR, CRI 15

Number of pumps	Pump type	Voltage code	Motor [kW]	Max. I_N [A]	Connections	W [mm]	L1 [mm]	L2 [mm]	H1 [mm]	H2 [mm]	H3 [mm]	Weight [kg]	Design
2	CR 15-2	U6	3	6.0	DN 80	1150	1200	380	859	194	1505	239	E
	CR 15-3	U6	4	7.6	DN 80	1150	1400	600	941	194	1505	280	E
	CR 15-4	U6	5.5	10.3	DN 80	1150	1400	600	1037	194	1505	302	E
	CR 15-5	U6	7.5	13.8	DN 80	1150	1400	600	1070	194	1505	237	E
3	CR 15-2	U6	3	6.0	DN 100	1170	1720	600	859	194	1505	453	E
	CR 15-3	U6	4	7.6	DN 100	1170	1720	600	941	194	1505	87	E
	CR 15-4	U6	5.5	10.3	DN 100	1170	1920	760	1037	194	1505	326	E
	CR 15-5	U6	7.5	13.8	DN 100	1170	1920	760	1070	194	1505	450	E
4	CR 15-2	U6	3	6.0	DN 100	1170	2040	600	859	194	1505	571	E
	CR 15-3	U6	4	7.6	DN 100	1170	2040	600	941	194	1505	410	E
	CR 15-4	U6	5.5	10.3	DN 100	1170	1390	960	1037	194	1505	518	H
	CR 15-5	U6	7.5	13.8	DN 100	1170	1390	960	1070	194	1505	567	H
5	CR 15-2	U6	3	6.0	DN 150	1235	1710	760	859	194	1505	780	H
	CR 15-3	U6	4	7.6	DN 150	1235	1710	760	941	194	1505	848	H
	CR 15-4	U6	5.5	10.3	DN 150	1235	1710	960	1037	194	1505	623	H
	CR 15-5	U6	7.5	13.8	DN 150	1235	1710	960	1070	194	1505	768	H
6	CR 15-2	U6	3	6.0	DN 150	1235	2030	760	859	194	1505	709	H
	CR 15-3	U6	4	7.6	DN 150	1235	2030	760	941	194	1505	531	H
	CR 15-4	U6	5.5	10.3	DN 150	1235	2030	960	1037	194	1505	643	H
	CR 15-5	U6	7.5	13.8	DN 150	1235	2030	960	1070	194	1505	703	H

Voltage code, U6: 3 x 380-415 V, PE, 60 Hz.
Design E: ASEAN design and systems with the controller mounted on the same base frame as the pumps.
Design H: ASEAN design and systems with the controller mounted on its own base frame.
Dimensions may vary by ± 10 mm.
L1 dimensions indicates the total length according to the design (not manifold length).

Hydro MPC-E with CR, CRI 20

Number of pumps	Pump type	Voltage code	Motor [kW]	Max. I_N [A]	Connections	W [mm]	L1 [mm]	L2 [mm]	H1 [mm]	H2 [mm]	H3 [mm]	Weight [kg]	Design
2	CR 20-2	U4	4	7.2	DN 80	1150	3110	800	896	194	1200	315	G
	CR 20-3	U4	5.5	9.8	DN 80	1150	750	800	992	194	1200	410	G
	CR 20-4	U4	7.5	12.9	DN 80	1150	2610	800	1025	194	1200	370	G
	CR 20-6	U4	11	18.6	DN 80	1150	3110	1200	1284	194	1800	500	G
3	CR 20-2	U4	4	7.2	DN 100	1170	3110	800	896	194	1200	413	G
	CR 20-3	U4	5.5	9.8	DN 100	1170	1070	800	992	194	1200	916	G
	CR 20-4	U4	7.5	12.9	DN 100	1170	2610	800	1025	194	1200	527	G
	CR 20-6	U4	11	18.6	DN 100	1170	3110	1200	1284	194	1800	795	G
4	CR 20-2	U4	4	7.2	DN 100	1170	3110	800	896	194	1200	627	G
	CR 20-3	U4	5.5	9.8	DN 100	1170	1610	800	992	194	1800	696	G
	CR 20-4	U4	7.5	12.9	DN 100	1170	2110	800	1025	194	1800	744	G
	CR 20-6	U4	11	18.6	DN 100	1170	2610	1200	1284	194	1800	856	G
5	CR 20-2	U4	4	7.2	DN 150	1235	1710	800	896	194	1200	1052	G
	CR 20-3	U4	5.5	9.8	DN 150	1235	1710	1200	992	194	1800	859	G
	CR 20-4	U4	7.5	12.9	DN 150	1235	1710	1200	1025	194	1800	1307	G
	CR 20-6	U4	11	18.6	DN 150	1235	2610	1200	1284	194	1800	1009	G
6	CR 20-2	U4	4	7.2	DN 150	1235	2030	800	896	194	1200	1183	G
	CR 20-3	U4	5.5	9.8	DN 150	1235	2030	1200	992	194	1800	1302	G
	CR 20-4	U4	7.5	12.9	DN 150	1235	2030	1200	1025	194	1800	882	G
	CR 20-6	U4	11	18.6	DN 150	1235	3110	1200	1284	194	1800	1264	G

Voltage code, U4: 3 x 380-415 V, PE, 50 Hz.
Design G: ASEAN design and systems with the controller mounted on its own base for floor mounting.
Dimensions may vary by ± 10 mm.
L1 dimensions indicates the total length according to the design (not manifold length).

Hydro MPC-S with CR, CRI 20

Number of pumps	Pump type	Voltage code	Motor [kW]	Max. I_N [A]	Connections	W [mm]	L1 [mm]	L2 [mm]	H1 [mm]	H2 [mm]	H3 [mm]	Weight [kg]	Design
2	CR 20-2	UA	4	7.6	DN 80	1150	1400	600	896	194	1505	300	E
	CR 20-3	UA	5.5	10.3	DN 80	1150	1400	600	992	194	1505	329	E
	CR 20-4	U6	7.5	13.8	DN 80	1150	1400	600	1025	194	1505	429	E
	CR 20-6	U6	11	20.1	DN 80	1150	1110	960	1284	194	1505	120	H
3	CR 20-2	UA	4	7.6	DN 100	1170	1720	600	896	194	1505	605	E
	CR 20-3	UA	5.5	10.3	DN 100	1170	1920	760	992	194	1505	136	E
	CR 20-4	U6	7.5	13.8	DN 100	1170	1920	760	1025	194	1505	184	E
	CR 20-6	U6	11	20.1	DN 100	1170	1610	960	1284	194	1505	148	H
4	CR 20-2	UA	4	7.6	DN 100	1170	2040	600	896	194	1505	751	E
	CR 20-3	UA	5.5	10.3	DN 100	1170	1390	960	992	194	1505	230	H
	CR 20-4	U6	7.5	13.8	DN 100	1170	1390	960	1025	194	1505	182	H
	CR 20-6	U6	11	20.1	DN 100	1170	2110	960	1284	194	1505	203	H
5	CR 20-2	UA	4	7.6	DN 150	1235	1710	760	896	194	1505	842	H
	CR 20-3	UA	5.5	10.3	DN 150	1235	1710	960	992	194	1505	1203	H
	CR 20-4	U6	7.5	13.8	DN 150	1235	1710	960	1025	194	1505	736	H
	CR 20-6	U6	11	20.1	DN 150	1235	2610	960	1284	194	1505	973	H
6	CR 20-2	UA	4	7.6	DN 150	1235	2030	760	896	194	1505	977	H
	CR 20-3	UA	5.5	10.3	DN 150	1235	2030	960	992	194	1505	626	H
	CR 20-4	U6	7.5	13.8	DN 150	1235	2030	960	1025	194	1505	816	H
	CR 20-6	U6	11	20.1	DN 150	1235	3110	800	1284	194	1200	480	G

Voltage code, U6: 3 x 380-415 V, PE, 60 Hz.
Voltage code, UA: 3 x 440-480 V, PE, 60 Hz.
Design E: ASEAN design and systems with the controller mounted on the same base frame as the pumps.
Design G: ASEAN design and systems with the controller mounted on its own base for floor mounting.
Design H: ASEAN design and systems with the controller mounted on its own base frame.
Dimensions may vary by ± 10 mm.
L1 dimensions indicates the total length according to the design (not manifold length).

Hydro MPC-E/-S with CR 32

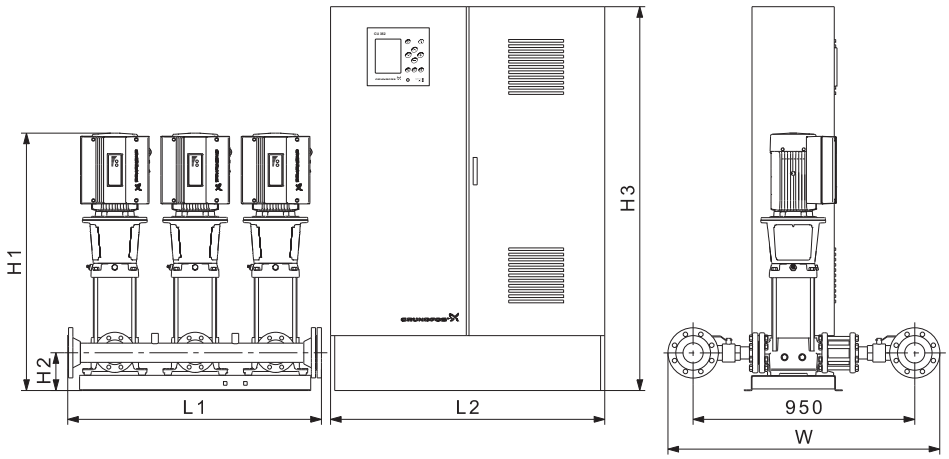

Dimensional sketch of a system with a floor-mounted controller (design G). The system is shown as an example. The pumps supplied may differ from the sketch.

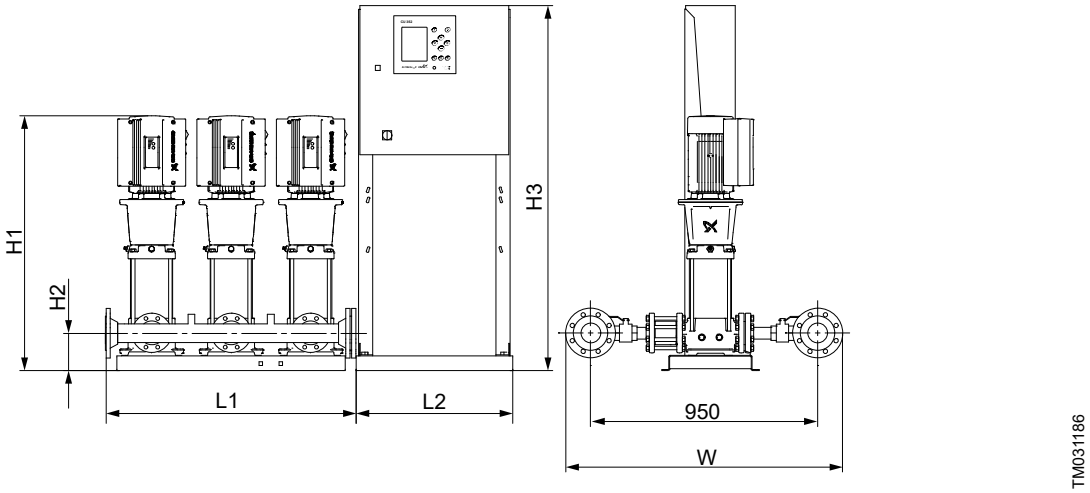

Dimensional sketch of a system with a controller mounted on a separate base frame (design H). The system is shown as an example. The pumps supplied may differ from the sketch.

Electrical data, dimensions and weights

Hydro MPC-E with CR 32

Number of pumps	Pump type	Voltage code	Motor [kW]	Max. I_N [A]	Connections	W [mm]	L1 [mm]	L2 [mm]	H1 [mm]	H2 [mm]	H3 [mm]	Weight [kg]	Design
2	CR 32-1	U4	3	5.7	DN 100	1170	1710	800	944	209	1200	306	G
	CR 32-2	U4	7.5	12.9	DN 100	1170	2030	800	1058	209	1200	389	G
	CR 32-4-2	U4	11	18.6	DN 100	1170	1110	1200	1400	209	1800	550	G
	CR 32-5-2	U4	15	24.6	DN 100	1170	1710	1200	1470	209	1800	567	G
3	CR 32-1	U4	3	5.7	DN 150	1235	3110	800	944	209	1200	496	G
	CR 32-2	U4	7.5	12.9	DN 150	1235	1610	800	1058	209	1200	1069	G
	CR 32-4-2	U4	11	18.6	DN 150	1235	1610	1200	1400	209	1800	743	G
	CR 32-5-2	U4	15	24.6	DN 150	1235	2610	1200	1470	209	1800	809	G
4	CR 32-1	U4	3	5.7	DN 150	1235	1610	800	944	209	1200	586	G
	CR 32-2U	U4	7.5	12.9	DN 150	1235	2110	800	1058	209	1800	735	G
	CR 32-4-2	U4	11	18.6	DN 150	1235	2110	1200	1400	209	1800	925	G
	CR 32-5-2	U4	15	24.6	DN 150	1235	2610	1200	1470	209	1800	1045	G
5	CR 32-1	U4	3	5.7	DN 150	1235	2610	800	944	209	1200	675	G
	CR 32-2	U4	7.5	12.9	DN 150	1235	2610	1200	1058	209	1800	855	G
	CR 32-4-2	U4	11	18.6	DN 150	1235	2610	1200	1400	209	1800	1125	G
	CR 32-5-2	U4	15	24.6	DN 150	1235	2610	1200	1470	209	1800	1269	G
6	CR 32-1	U4	3	5.7	DN 150	1235	3110	800	944	209	1200	775	G
	CR 32-2	U4	7.5	12.9	DN 150	1235	3110	1200	1058	209	1800	1017	G
	CR 32-4-2	U4	11	18.6	DN 150	1235	3110	1200	1400	209	1800	1370	G
	CR 32-5-2	U4	15	24.6	DN 150	1235	3110	1200	1470	209	1800	1467	G

Voltage code, U4: 3 x 380-415 V, PE, 50 Hz.
Design G: ASEAN design and systems with the controller mounted on its own base for floor mounting.
Dimensions may vary by ± 10 mm.
L1 dimensions indicates the total length according to the design (not manifold length).

Hydro MPC-S with CR 32

Number of pumps	Pump type	Voltage code	Motor [kW]	Max. I_N [A]	Connections	W [mm]	L1 [mm]	L2 [mm]	H1 [mm]	H2 [mm]	H3 [mm]	Weight [kg]	Design
2	CR 32-1	UA	3	6.0	DN 100	1170	1560	380	944	209	1505	266	E
	CR 32-2	U6	7.5	13.8	DN 100	1170	1760	600	1058	209	1505	348	E
	CR 32-4-2	U6	11	20.1	DN 100	1170	1960	760	1400	209	1505	1218	E
	CR 32-5-2	U6	15	26.9	DN 100	1170	1960	760	1470	209	1505	510	E
3	CR 32-1	UA	3	6.0	DN 150	1235	1610	760	944	209	1505	742	H
	CR 32-2	UA	7.5	13.8	DN 150	1235	1610	960	1058	209	1505	166	H
	CR 32-4-2	U6	11	20.1	DN 150	1235	1610	960	1400	209	1505	1430	H
	CR 32-5-2	U6	15	26.9	DN 150	1235	1610	960	1470	209	1505	590	H
4	CR 32-1	UA	3	6.0	DN 150	1235	2110	760	944	209	1505	946	H
	CR 32-2	U6	7.5	13.8	DN 150	1235	2110	960	1058	209	1505	737	H
	CR 32-4-2	U6	11	20.1	DN 150	1235	2110	960	1400	209	1505	908	H
	CR 32-5-2	U6	15	26.9	DN 150	1235	2110	960	1470	209	1505	998	H
5	CR 32-1	UA	3	6.0	DN 150	1235	2610	760	944	209	1505	697	H
	CR 32-2	U6	7.5	13.8	DN 150	1235	2610	960	1058	209	1505	1092	H
	CR 32-4-2	U6	11	20.1	DN 150	1235	2610	960	1400	209	1505	1081	H
	CR 32-5-2	U6	15	26.9	DN 150	1235	2610	800	1470	209	1200	1505	G
6	CR 32-1	UA	3	6.0	DN 150	1235	3110	760	944	209	1505	869	H
	CR 32-2	U6	7.5	13.8	DN 150	1235	3110	960	1058	209	1505	1341	H
	CR 32-4-2	U6	11	20.1	DN 150	1235	3110	800	1400	209	1200	1282	G
	CR 32-5-2	U6	15	26.9	DN 150	1235	3110	800	1470	209	1200	1371	G

Voltage code, U6: 3 x 380-415 V, PE, 60 Hz.
Voltage code, UA: 3 x 440-480 V, PE, 60 Hz.
Design E: ASEAN design and systems with the controller mounted on the same base frame as the pumps.
Design G: ASEAN design and systems with the controller mounted on its own base for floor mounting.
Design H: ASEAN design and systems with the controller mounted on its own base frame.
Dimensions may vary by ± 10 mm.
L1 dimensions indicates the total length according to the design (not manifold length).

Hydro MPC-E/-S with CR 45, CR 64

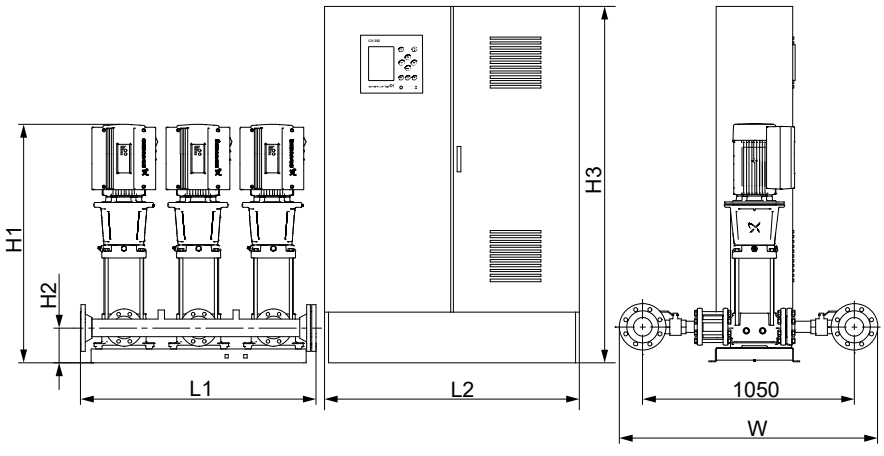

Dimensional sketch of a system with a floor-mounted controller (design G). The system is shown as an example. The pumps supplied may differ from the sketch.

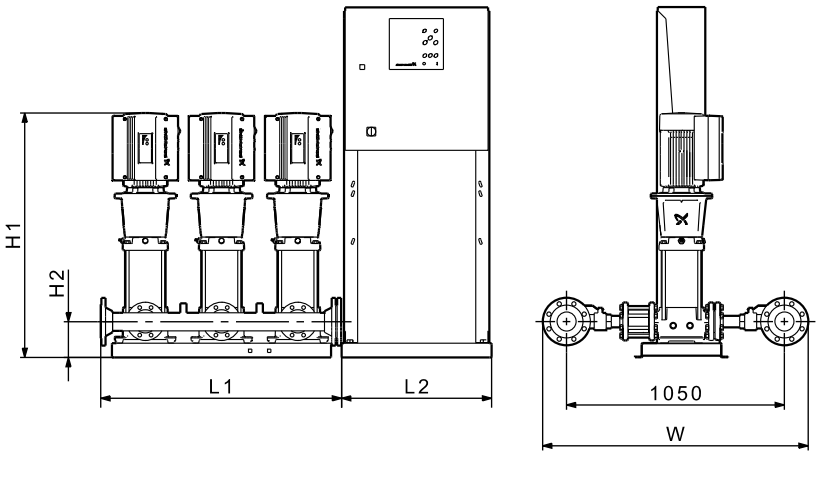

Dimensional sketch of a system with a controller mounted on a separate base frame (design H). The system is shown as an example. The pumps supplied may differ from the sketch.

Electrical data, dimensions and weights

Hydro MPC-E with CR 45

Number of pumps	Pump type	Voltage code	Motor [kW]	Max. I_N [A]	Connections	W [mm]	L1 [mm]	L2 [mm]	H1 [mm]	H2 [mm]	H3 [mm]	Weight [kg]	Design
3	CR 45-1	U4	7.5	12.9	DN 200	1390	3110	800	1042	244	1200	669	G
	CR 45-2	U4	15	24.6	DN 200	1390	2610	1200	1324	244	1800	853	G
	CR 45-3	U4	18.5	30.6	DN 200	1390	3110	1200	1448	244	1800	909	G
	CR 45-4-2	U4	22	35.5	DN 200	1390	2610	1200	1554	244	1800	970	G
4	CR 45-1	U4	7.5	12.9	DN 200	1390	3110	800	1042	244	1800	794	G
	CR 45-2	U4	15	24.6	DN 200	1390	1610	1200	1324	244	1800	1082	G
	CR 45-3	U4	18.5	30.6	DN 200	1390	2110	1200	1448	244	1800	1189	G
	CR 45-4-2	U4	22	35.5	DN 200	1390	2610	1200	1554	244	1800	1280	G
5	CR 45-1	U4	7.5	12.9	DN 200	1390	2610	1200	1042	244	1800	953	G
	CR 45-2	U4	15	24.6	DN 200	1390	2610	1200	1324	244	1800	1334	G
	CR 45-3	U4	18.5	30.6	DN 200	1390	2610	1200	1448	244	1800	1453	G
	CR 45-4-2	U4	22	35.5	DN 200	1390	2610	1200	1554	244	1800	1622	G
6	CR 45-1	U4	7.5	12.9	DN 200	1390	3110	1200	1042	244	1800	1139	G
	CR 45-2	U4	15	24.6	DN 200	1390	3110	1200	1324	244	1800	1548	G
	CR 45-3	U4	18.5	30.6	DN 200	1390	3110	1200	1448	244	1800	1742	G
	CR 45-4-2	U4	22	35.5	DN 200	1390	3110	1200	1554	244	1800	1856	G

Voltage code, U4: 3 x 380-415 V, PE, 50 Hz.
Design G: ASEAN design and systems with the controller mounted on its own base for floor mounting.
Dimensions may vary by ± 10 mm.
L1 dimensions indicates the total length according to the design (not manifold length).

Hydro MPC-S with CR 45

Number of pumps	Pump type	Voltage code	Motor [kW]	Max. I_N [A]	Connections	W [mm]	L1 [mm]	L2 [mm]	H1 [mm]	H2 [mm]	H3 [mm]	Weight [kg]	Design
3	CR 45-1	U6	7.5	13.8	DN 200	1390	1610	960	1042	244	1505	783	H
	CR 45-2	U6	15	26.9	DN 200	1390	1610	960	1324	244	1505	836	H
	CR 45-3	U6	18.5	33.2	DN 200	1390	1610	960	1448	244	1505	908	H
	CR 45-4-2	U6	22	38.5	DN 200	1390	1610	960	1554	244	1505	599	H
4	CR 45-1	U6	7.5	13.8	DN 200	1390	2110	960	1042	244	1505	1074	H
	CR 45-2	U6	15	26.9	DN 200	1390	2110	960	1324	244	1505	1146	H
	CR 45-3	U6	18.5	33.2	DN 200	1390	2110	800	1448	244	1200	748	G
	CR 45-4-2	U6	22	38.5	DN 200	1390	2110	800	1554	244	1200	1073	G
5	CR 45-1	U6	7.5	13.8	DN 200	1390	2610	960	1042	244	1505	1659	H
	CR 45-2	U6	15	26.9	DN 200	1390	2610	800	1324	244	1200	1769	G
	CR 45-3	U6	18.5	33.2	DN 200	1390	2610	800	1448	244	1200	1098	G
	CR 45-4-2	U6	22	38.5	DN 200	1390	2610	1000	1554	244	1800	930	G
6	CR 45-1	U6	7.5	13.8	DN 200	1390	3110	960	1042	244	1505	1509	H
	CR 45-2	U6	15	26.9	DN 200	1390	3110	800	1324	244	1200	923	G
	CR 45-3	U6	18.5	33.2	DN 200	1390	3110	1000	1448	244	1800	746	G
	CR 45-4-2	U6	22	38.5	DN 200	1390	3110	1000	1554	244	1800	1168	G

Voltage code, U6: 3 x 380-415 V, PE, 60 Hz.
Design G: ASEAN design and systems with the controller mounted on its own base for floor mounting.
Design H: ASEAN design and systems with the controller mounted on its own base frame.
Dimensions may vary by ± 10 mm.
L1 dimensions indicates the total length according to the design (not manifold length).

Hydro MPC-E with CR 64

Number of pumps	Pump type	Voltage code	Motor [kW]	Max. I_N [A]	Connections	W [mm]	L1 [mm]	L2 [mm]	H1 [mm]	H2 [mm]	H3 [mm]	Weight [kg]	Design
3	CR 64-1-1	U4	7.5	12.9	DN 200	1390	3110	800	1044	244	1200	673	G
	CR 64-1	U4	11	18.6	DN 200	1390	1610	1200	1246	244	1800	934	G
	CR 64-2-2	U4	15	24.6	DN 200	1390	3110	1200	1329	244	1800	866	G
	CR 64-2-1	U4	18.5	30.6	DN 200	1390	2610	1200	1373	244	1800	899	G
	CR 64-3-2	U4	22	35.5	DN 200	1390	2610	1200	1481	244	1800	976	G
	CR 64-2	U4	22	35.5	DN 200	1390	1610	1200	1399	244	1800	991	G
	CR 64-3-1	U4	30	54.0	DN 200	1390	1610	1200	1551	244	1800	1815	G
	CR 64-3	U4	30	54.0	DN 200	1390	1610	1200	1551	244	1800	1771	G
	CR 64-4-2	U4	37	67.0	DN 200	1390	1610	1200	1659	244	1800	1541	G
4	CR 64-1-1	U4	7.5	12.9	DN 200	1390	3110	800	1044	244	1800	824	G
	CR 64-1	U4	11	18.6	DN 200	1390	2110	1200	1246	244	1800	982	G
	CR 64-2-2	U4	15	24.6	DN 200	1390	2110	1200	1329	244	1800	1140	G
	CR 64-2-1	U4	18.5	30.6	DN 200	1390	1610	1200	1373	244	1800	1209	G
	CR 64-3-2	U4	22	35.5	DN 200	1390	2610	1200	1481	244	1800	1308	G
	CR 64-2	U4	22	35.5	DN 200	1390	2110	1200	1399	244	1800	1348	G
	CR 64-3-1	U4	30	54.0	DN 200	1390	2110	1200	1551	244	1800	2257	G
	CR 64-3	U4	30	54.0	DN 200	1390	2110	1200	1551	244	1800	2228	G
	CR 64-4-2	U4	37	67.0	DN 200	1390	2110	1200	1659	244	1800	2093	G
5	CR 64-1-1	U4	7.5	12.9	DN 200	1390	2610	1200	1044	244	1800	1026	G
	CR 64-1	U4	11	18.6	DN 200	1390	2610	1200	1246	244	1800	1196	G
	CR 64-2-2	U4	15	24.6	DN 200	1390	2610	1200	1329	244	1800	1401	G
	CR 64-2-1	U4	18.5	30.6	DN 200	1390	2610	1200	1373	244	1800	1411	G
	CR 64-2	U4	22	35.5	DN 200	1390	2610	1200	1399	244	1800	1682	G
	CR 64-3-2	U4	22	35.5	DN 200	1390	2610	1200	1481	244	1800	1695	G
	CR 64-3-1	U4	30	54.0	DN 200	1390	2610	1200	1551	244	1800	2325	G
	CR 64-3	U4	30	54.0	DN 200	1390	2610	1200	1551	244	1800	2692	G
	CR 64-4-2	U4	37	67.0	DN 200	1390	2610	1200	1659	244	1800	2552	G
6	CR 64-1-1	U4	7.5	12.9	DN 200	1390	3110	1200	1044	244	1800	1265	G
	CR 64-1	U4	11	18.6	DN 200	1390	3110	1200	1246	244	1800	1500	G
	CR 64-2-2	U4	15	24.6	DN 200	1390	3110	1200	1329	244	1800	1628	G
	CR 64-2-1	U4	18.5	30.6	DN 200	1390	3110	1200	1373	244	1800	1687	G
	CR 64-2	U4	22	35.5	DN 200	1390	3110	1200	1399	244	1800	1901	G
	CR 64-3-2	U4	22	35.5	DN 200	1390	3110	1200	1481	244	1800	2279	G
	CR 64-3-1	U4	30	54.0	DN 200	1390	3110	1200	1551	244	1800	2738	G
	CR 64-3	U4	30	54.0	DN 200	1390	3110	1200	1551	244	1800	2596	G
	CR 64-4-2	U4	37	67.0	DN 200	1390	3110	1200	1659	244	1800	2802	G

Voltage code, U4: 3 x 380-415 V, PE, 50 Hz.

Design G: ASEAN design and systems with the controller mounted on its own base for floor mounting.

Dimensions may vary by ± 10 mm.

L1 dimensions indicates the total length according to the design (not manifold length).

Hydro MPC-S with CR 64

Number of pumps	Pump type	Voltage code	Motor [kW]	Max. I_N [A]	Connections	W [mm]	L1 [mm]	L2 [mm]	H1 [mm]	H2 [mm]	H3 [mm]	Weight [kg]	Design
3	CR 64-1-1	U6	7.5	13.8	DN 200	1390	1610	960	1044	244	1505	835	H
	CR 64-1	U6	11	20.1	DN 200	1390	1610	960	1246	244	1505	1526	H
	CR 64-2-2	U6	15	26.9	DN 200	1390	1610	960	1329	244	1505	909	H
	CR 64-2-1	U6	18.5	33.2	DN 200	1390	1610	960	1373	244	1505	794	H
	CR 64-3-2	U6	22	38.5	DN 200	1390	1610	960	1481	244	1505	806	H
	CR 64-2	U6	22	38.5	DN 200	1390	1610	960	1399	244	1505	1772	H
	CR 64-3-1	U6	30	53.0	DN 200	1390	1610	960	1551	244	1505	1691	H
	CR 64-3	U6	30	53.0	DN 200	1390	1610	960	1551	244	1505	1875	H
	CR 64-4-2	U6	37	65.5	DN 200	1390	1500	800	1659	244	1800	1641	G
4	CR 64-1-1	U6	7.5	13.8	DN 200	1390	2110	960	1044	244	1505	1012	H
	CR 64-1	U6	11	20.1	DN 200	1390	2110	960	1246	244	1505	1369	H
	CR 64-2-2	U6	15	26.9	DN 200	1390	2110	960	1329	244	1505	1145	H
	CR 64-2-1	U6	18.5	33.2	DN 200	1390	2110	800	1373	244	1200	1148	G
	CR 64-3-2	U6	22	38.5	DN 200	1390	2110	800	1481	244	1200	1081	G
	CR 64-2	U6	22	38.5	DN 200	1390	2110	800	1399	244	1200	1272	G
	CR 64-3-1	U6	30	53.0	DN 200	1390	2110	800	1551	244	1800	2153	G
	CR 64-3	U6	30	53.0	DN 200	1390	2110	800	1551	244	1800	2359	G
	CR 64-4-2	U6	37	65.5	DN 200	1390	2110	1200	1659	244	1800	1478	G
5	CR 64-1-1	U6	7.5	13.8	DN 200	1390	2610	960	1044	244	1505	1429	H
	CR 64-1	U6	11	20.1	DN 200	1390	2610	960	1246	244	1505	1658	H
	CR 64-2-2	U6	15	26.9	DN 200	1390	2610	800	1329	244	1200	1130	G
	CR 64-2-1	U6	18.5	33.2	DN 200	1390	2610	800	1373	244	1200	1745	G
	CR 64-2	U6	22	38.5	DN 200	1390	2610	1000	1399	244	1800	1691	G
	CR 64-3-2	U6	22	38.5	DN 200	1390	2610	1000	1481	244	1800	2567	G
	CR 64-3-1	U6	30	53.0	DN 200	1390	2610	1200	1551	244	1800	2567	G
	CR 64-3	U6	30	53.0	DN 200	1390	2610	1200	1551	244	1800	2773	G
	CR 64-4-2	U6	37	65.5	DN 200	1390	2610	1600	1659	244	1800	1711	G
6	CR 64-1-1	U6	7.5	13.8	DN 200	1390	3110	960	1044	244	1505	1301	H
	CR 64-1	U6	11	20.1	DN 200	1390	3110	800	1246	244	1200	896	G
	CR 64-2-2	U6	15	26.9	DN 200	1390	3110	800	1329	244	1200	1489	G
	CR 64-2-1	U6	18.5	33.2	DN 200	1390	3110	1000	1373	244	1800	1511	G
	CR 64-2	U6	22	38.5	DN 200	1390	3110	1000	1399	244	1800	2153	G
	CR 64-3-2	U6	22	38.5	DN 200	1390	3110	1000	1481	244	1800	1272	G
	CR 64-3-1	U6	30	53.0	DN 200	1390	3110	1600	1551	244	1800	1416	G
	CR 64-3	U6	30	53.0	DN 200	1390	3110	1600	1551	244	1800	1368	G
	CR 64-4-2	U6	37	65.5	DN 200	1390	3110	1600	1659	244	1800	1571	G

Voltage code, U6: 3 x 380-415 V, PE, 60 Hz.

Design G: ASEAN design and systems with the controller mounted on its own base for floor mounting.

Design H: ASEAN design and systems with the controller mounted on its own base frame.

Dimensions may vary by ± 10 mm.

L1 dimensions indicates the total length according to the design (not manifold length).

Hydro MPC-E/-S with CR 90

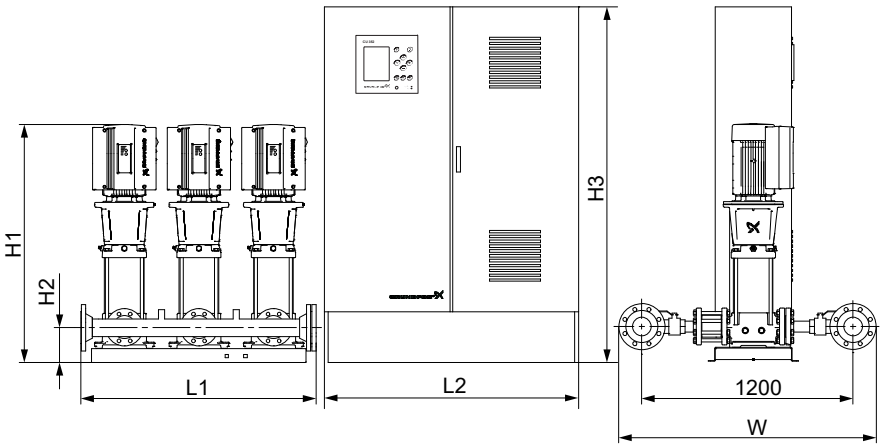

Dimensional sketch of a system with a floor-mounted controller (design G). The system is shown as an example. The pumps supplied may differ from the sketch.

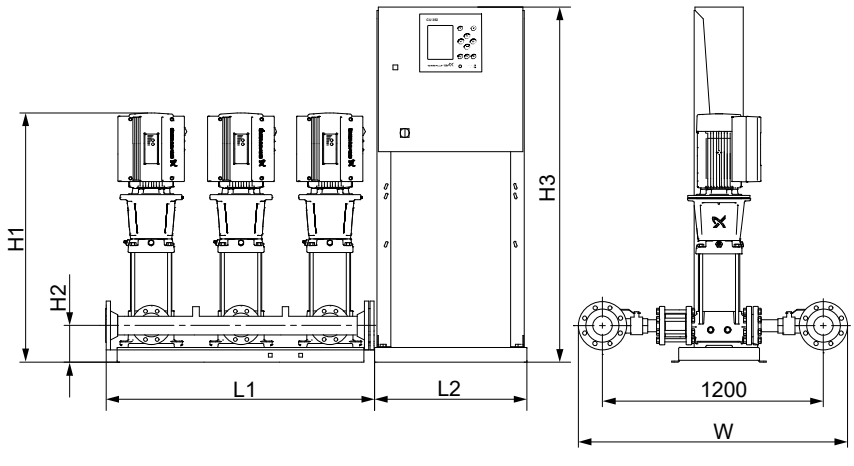

Dimensional sketch of a system with a controller mounted on a separate base frame (design H). The system is shown as an example. The pumps supplied may differ from the sketch.

Electrical data, dimensions and weights

Hydro MPC-E with CR 90

Number of pumps	Pump type	Voltage code	Motor [kW]	Max. I_N [A]	Connections	W [mm]	L1 [mm]	L2 [mm]	H1 [mm]	H2 [mm]	H3 [mm]	Weight [kg]	Design
3	CR 90-1-1	U4	11	20.5	DN 200	1540	2610	1200	1256	244	1800	838	G
	CR 90-1	U4	15	27.2	DN 200	1540	3110	1200	1256	244	1800	872	G
	CR 90-2-2	U4	18.5	33.8	DN 200	1540	3110	1200	1392	244	1800	929	G
	CR 90-2-1	U4	22	38.9	DN 200	1540	1610	1200	1418	244	1800	1388	G
	CR 90-2	U4	30	54.0	DN 200	1540	1610	1200	1488	244	1800	1379	G
	CR 90-3-2	U4	37	67.0	DN 200	1540	1610	1200	1605	244	1800	1552	G
	CR 90-3-1	U4	37	67.0	DN 200	1540	1610	1200	1605	244	1800	1965	G
4	CR 90-1-1	U4	11	20.5	DN 250	1605	2610	1200	1256	244	1800	1167	G
	CR 90-1	U4	15	27.2	DN 250	1605	3110	1200	1256	244	1800	1252	G
	CR 90-2-2	U4	18.5	33.8	DN 250	1605	3110	1200	1392	244	1800	1345	G
	CR 90-2-1	U4	22	38.9	DN 250	1605	2110	1200	1418	244	1800	1798	G
	CR 90-2	U4	30	54.0	DN 250	1605	2110	1200	1488	244	1800	2022	G
	CR 90-3-2	U4	37	67.0	DN 250	1605	2110	1200	1605	244	1800	2203	G
	CR 90-3-1	U4	37	67.0	DN 250	1605	2110	1200	1605	244	1800	2567	G
5	CR 90-1-1	U4	11	20.5	DN 250	1605	2610	1200	1256	244	1800	1438	G
	CR 90-1	U4	15	27.2	DN 250	1605	2610	1200	1256	244	1800	1560	G
	CR 90-2-2	U4	18.5	33.8	DN 250	1605	2610	1200	1392	244	1800	2101	G
	CR 90-2-1	U4	22	38.9	DN 250	1605	2610	1200	1418	244	1800	2143	G
	CR 90-2	U4	30	54.0	DN 250	1605	2610	1200	1488	244	1800	2518	G
	CR 90-3-2	U4	37	67.0	DN 250	1605	2610	1200	1605	244	1800	2724	G
	CR 90-3-1	U4	37	67.0	DN 250	1605	2610	1200	1605	244	1800	3063	G
6	CR 90-1-1	U4	11	20.5	DN 250	1605	3110	1200	1256	244	1800	1809	G
	CR 90-1	U4	15	27.2	DN 250	1605	3110	1200	1256	244	1800	2203	G
	CR 90-2-2	U4	18.5	33.8	DN 250	1605	3110	1200	1392	244	1800	2040	G
	CR 90-2-1	U4	22	38.9	DN 250	1605	3110	1200	1418	244	1800	1986	G
	CR 90-2	U4	30	54.0	DN 250	1605	3110	1200	1488	244	1800	2781	G
	CR 90-3-2	U4	37	67.0	DN 250	1605	3110	1200	1605	244	1800	3121	G
	CR 90-3-1	U4	37	67.0	DN 250	1605	3110	1200	1605	244	1800	3445	G

Voltage code, U4: 3 x 380-415 V, PE, 50 Hz.

Design G: ASEAN design and systems with the controller mounted on its own base for floor mounting.

Dimensions may vary by ± 10 mm.

L1 dimensions indicates the total length according to the design (not manifold length).

Hydro MPC-S with CR 90

Number of pumps	Pump type	Voltage code	Motor [kW]	Max. I_N [A]	Connections	W [mm]	L1 [mm]	L2 [mm]	H1 [mm]	H2 [mm]	H3 [mm]	Weight [kg]	Design
3	CR 90-1-1	U6	11	20.1	DN 200	1540	1610	960	1256	244	1505	862	H
	CR 90-1	U6	15	26.9	DN 200	1540	1610	960	1256	244	1505	772	H
	CR 90-2-2	U6	18.5	33.2	DN 200	1540	1610	960	1392	244	1505	244	H
	CR 90-2-1	U6	22	38.5	DN 200	1540	1610	960	1418	244	1505	1826	H
	CR 90-2	U6	30	53.0	DN 200	1540	1610	960	1488	244	1505	2006	H
	CR 90-3-2	U6	37	65.5	DN 200	1540	1500	800	1605	244	1800	2006	G
	CR 90-3-1	U6	37	65.5	DN 200	1540	1500	800	1605	244	1800	2954	G
4	CR 90-1-1	U6	11	20.1	DN 250	1605	2110	960	1256	244	1505	301	H
	CR 90-1	U6	15	26.9	DN 250	1605	2110	960	1256	244	1505	1225	H
	CR 90-2-2	U6	18.5	33.2	DN 250	1605	2110	800	1392	244	1200	317	G
	CR 90-2-1	U6	22	38.5	DN 250	1605	2110	800	1418	244	1200	2333	G
	CR 90-2	U6	30	53.0	DN 250	1605	2110	800	1488	244	1800	2534	G
	CR 90-3-2	U6	37	65.5	DN 250	1605	2110	1200	1605	244	1800	2534	G
	CR 90-3-1	U6	37	65.5	DN 250	1605	2110	1200	1605	244	1800	2954	G
5	CR 90-1-1	U6	11	20.1	DN 250	1605	2610	960	1256	244	1505	1872	H
	CR 90-1	U6	15	26.9	DN 250	1605	2610	800	1256	244	1200	1283	G
	CR 90-2-2	U6	18.5	33.2	DN 250	1605	2610	800	1392	244	1200	1960	G
	CR 90-2-1	U6	22	38.5	DN 250	1605	2610	1000	1418	244	1800	2754	G
	CR 90-2	U6	30	53.0	DN 250	1605	2610	1200	1488	244	1800	2954	G
	CR 90-3-2	U6	37	65.5	DN 250	1605	2610	1600	1605	244	1800	2954	G
	CR 90-3-1	U6	37	65.5	DN 250	1605	2610	1600	1605	244	1800	2954	G
6	CR 90-1-1	U6	11	20.1	DN 250	1605	3110	800	1256	244	1200	923	G
	CR 90-1	U6	15	26.9	DN 250	1605	3110	800	1256	244	1200	1691	G
	CR 90-2-2	U6	18.5	33.2	DN 250	1605	3110	1000	1392	244	1800	1286	G
	CR 90-2-1	U6	22	38.5	DN 250	1605	3110	1000	1418	244	1800	1426	G
	CR 90-2	U6	30	53.0	DN 250	1605	3110	1600	1488	244	1800	1426	G
	CR 90-3-2	U6	37	65.5	DN 250	1605	3110	1600	1605	244	1800	2954	H
	CR 90-3-1	U6	37	65.5	DN 250	1605	3110	1600	1605	244	1800	2954	G

Voltage code, U6: 3 x 380-415 V, PE, 60 Hz.
Design G: ASEAN design and systems with the controller mounted on its own base for floor mounting.
Design H: ASEAN design and systems with the controller mounted on its own base frame.
Dimensions may vary by ± 10 mm.
L1 dimensions indicates the total length according to the design (not manifold length).

12. Optional equipment

Optional equipment, Hydro MPC

All optional equipment must be specified when ordering the system, as it must be fitted from factory prior to delivery. See options in the Hydro MPC type key.

The options listed below are not all available for all markets.

Option		Description	Location	Options (type key for Hydro MPC)
Standard hydraulics, PN 16		This is the standard option for Hydro MPC hydraulics rated for PN 16 as a minimum.	System	A
Pilot pump		The pilot pump takes over operation from main pumps during periods when the consumption is so low that the pilot pump can deliver the flow and in that way maintain a high efficiency, the typically pump size is 25 % of the main pump. Pilot pumps are available for Hydro MPC-E and -F control variants.	System	B
Bypass connection	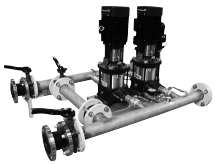	The bypass connection is a pipe diversion consisting of a manifold, two isolating valves and a non-return valve. The bypass connection allows water to bypass the pumps from the inlet to the outlet manifold.	System	C
NRV on inlet side		As standard, the non-return valves are fitted on the outlet side of the pumps of the system. In installations with suction lift, we recommend that you install non-return valves on the inlet side of the pumps to prevent dry running.	Inlet side	D
Elbow manifold	-	Manifolds with elbows in one end can reduce dead ends. On request.	Inlet or outlet side	E
No inlet manifold		Depending on the application or installation site, the Hydro MPC can be ordered without inlet manifold.	-	F
Diaphragm tank		In buildings it is usually necessary to install a diaphragm tank on the outlet side of the system. As standard, the Hydro MPC system is designed for a maximum system pressure of 16 bar. A standard Hydro MPC system includes pressure transmitters and one gauge with a rated pressure of 16 bar (full scale). Hydro MPC systems designed for PN 16 diaphragm tanks up to 33 litres are mounted on the outlet manifold.	On outlet manifold Up to 33 l	G

Option		Description	Location	Options (type key for Hydro MPC)
Dry-running protection		The system must be protected against dry running. The inlet conditions determine the type of dry-running protection. • If the system draws water from a tank or a well, select a level switch or an electrode relay for dry-running protection. • If the system has an inlet pressure, select a pressure transmitter or a pressure switch for dry-running protection. For further description, see section Dry-running protection.	On inlet manifold	H
Repair switch	-	By means of a repair switch fitted on the individual pumps of the Hydro system, the supply voltage to the pump can be switched off during, for example, repair. One switch per pump. For further description, see section Repair switch.	On the pump	I
Redundant primary sensor		To increase the reliability, a redundant primary sensor can be connected as backup sensor for the primary sensor. The redundant primary sensor must be of the same type as the primary sensor. For further description, see section Redundant primary sensor.	-	J
One free pump position	-	Systems with one free pump position are available from a 3-pump up to a 6-pump system. The systems, including the controller, are prepared for the future pump.	-	K
Two free pump positions		Systems with two free pump positions are available from a 4-pump up to a 6-pump system. The systems, including the controller, are prepared for the future pumps.	-	L
Three free pump positions		Systems with three free pump positions are available from a 5-pump up to a 6-pump system. The systems, including the controller, are prepared for the future pumps.	-	M
PN 10 pressure rating	-	With this option the Hydro MPC hydraulics are rated to PN10 as a minimum.	-	N
PN 25 pressure rating	-	With this option the Hydro MPC hydraulics are rated to PN 25 as a minimum.	-	O
PN 40 pressure rating	-	With this option the Hydro MPC hydraulics are rated to PN 40 as a minimum.	-	P
Low pre-pressure (low NPSH)	-	The systems are available with CR low-NPSH pumps designed to eliminate the risk of cavitation and ensure a stable and reliable operation. The CR low-NPSH has a special inlet design that reduces the NPSH value required by the pump and prevents erosion and destruction of pump, pipes and valves. The improved inlet design may expose the low-NPSH pump to more stress than conventional pumps without affecting the stability of operation. The CR low-NPSH pump reduces excess pressure itself and does not require any additional tank to provide supplementary pressure. Systems are available on request with CR low-NPSH from CR, CRI 3 to CR, CRI 20 and CRN, CRNE from CRN, CRNE 3 to CRN, CRNE 64.	-	Q
RPM = 50 Hz	-	50 Hz pumps.	-	R
	-	Customised systems can be produced on request. For further information contact your local Grundfos sales office.	-	S

Option		Description	Location	Options (type key for Hydro MPC)
Certificate	-	For further information contact your local Grundfos sales office.	-	T
Undersized motor		We recommend a Hydro system with undersized motors if operating conditions deviate from those stated in the Hydro MPC Data Booklet and Grundfos Product Center. We especially recommend undersized motors if the duty point is constant and the flow rate is significantly lower than the maximum recommended flow rate.	-	U
Standard controls with options		See section Type key, Control MPC.	-	V
Customised controls		See section Type key, Control MPC.	-	W

Related information

Type key, Control MPC
Dry-running protection
Repair switch
Redundant primary sensor

Dry-running protection

Description	Range [bar]
Dry-running protection by means of electrode relay, without electrodes and electrode cable [14]	-
Pressure switch [14]	0-2
	0-4
	0-8
	0-16
Inlet pressure sensor [15]	0-1
	0-4
	0-6
	0-10
	0-16

[14] Only one type of dry-running protection can be selected, as it must be connected to the same digital input as CU 352. This also applies to level switches. For further information about CU 352, see section CU 352.

[15] The inlet pressure sensor is normally connected to the analog input AI2 of CU 352. If this input is used for another function, such as "External setpoint", connect the sensor to analog input AI3. If, however, this input is also occupied, increase the number of analog inputs by installing an IO 351B module, see section Optional equipment, Control MPC. For further information about IO 351B, see section IO 351.

Related information

CU 352

IO 351

Optional equipment, Control MPC

Repair switch

Description	Motor current and starting method
Repair switch	≤ 16 A, DOL
	> 16 A < 25 A, DOL
	> 25 A < 40 A, DOL
	> 40 A < 63 A, DOL
	> 63 A < 80 A, DOL
	> 80 A < 100 A, DOL
	> 100 A < 125 A, DOL
	> 125 A < 175 A, DOL
	> 175 A < 250 A, DOL
	≤ 16 A, Y/Δ
	> 16 A < 25 A, Y/Δ
	> 25 A < 40 A, Y/Δ
	> 40 A < 63 A, Y/Δ
	> 63 A < 80 A, Y/Δ
	> 80 A < 100 A, Y/Δ
	> 100 A < 125 A, Y/Δ
	> 125 A < 175 A, Y/Δ
	> 175 A < 250 A, Y/Δ

Redundant primary sensor

Description	Range [bar]
Redundant primary sensor [16]	0-10
	0-16

[16] The redundant primary sensor is normally connected to the analog input AI3 of CU 352. If this input is used for another function, such as "External setpoint", connect the redundant sensor to analog input AI2. If this input is also occupied, increase the number of analog inputs by installing an IO 351B module, see section Optional equipment, Control MPC.

Related information

Optional equipment, Control MPC

Optional equipment, Control MPC

Operating-panel options					Included in pre-defined Control MPC standard			
Option		**Description**	**Location**	**Options (type key for Control MPC)**	**A**	**B**	**E**	**F**
Redundant primary sensor	-	The redundant primary sensor is visible on the wiring diagram. The redundant primary sensor is not included.	In the controller	O1	●	●	●	●
Show repair switches in wiring diagram	-	The repair switches are visible on the wiring diagram. Repair switches are not included.	In the controller	O2	●	●	●	●
Emergency-operation switch	-	The emergency-operation switch enables emergency operation if a fault occurs in the CU 352. The motor protection and the dry-running protection are not activated during emergency operation. Order one switch for each pump.	In the controller	O3	-	●	●	●
IO 351B interface		This option features a factory-fitted and non-programmed IO 351B interface enabling exchange of: • 9 additional digital inputs • 7 additional digital outputs • 2 additional analog inputs • 3 analog outputs The CU 352 supports up to two IO 351B interfaces.	In the controller	O4	-	-	-	-
Potential-free contacts	-	Potential-free contacts are used to indicate that the pumps in the system are running or that an alarm is present.	In the controller	O5	-	-	-	-
CIM - Communication interface modules	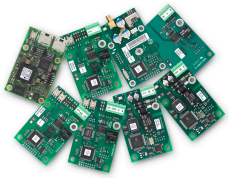	The CIMs enable communication of operating data, such as measured values and setpoints, between Hydro MPC and a building-management system. CIMs must be fitted by authorised staff. The CIM enables transfer of data such as: • operating mode • setpoint • control mode • warnings and alarms • power/energy consumption. We offer the following CIMs:		O6				
CIM 050		GENIbus module	In the controller	O6a	-	-	-	-
CIM 110		LonWorks module		O6b	-	-	-	-
CIM 150		PROFIBUS DP Module		O6c	-	-	-	-
CIM 200		Modbus RTU Module		O6d	-	-	-	-
CIM 260		3G/4G GRM Grundfos Remote Management		O6e	-	-	-	-
CIM 280		3G/4G GRM Grundfos Remote Management		O6f	-	-	-	-
CIM 300		BACnet MS/TP Module		O6g	-	-	-	-
CIM 500		Ethernet module		O6h	-	-	-	-
Dry-running protection - electrode relay	-	Electrode Relay mounted in panel. Order electrodes separately.	In the controller	O7	-	-	●	-
Dry-running protection - vibration-limit switch	-	The vibration-limit switch is visible on the wiring diagram. Vibration-limit switch is not included.	In the controller	O8	-	-	-	●
Dry-running protection - inlet pressure sensor	-	The inlet-pressure sensor is visible on the wiring diagram. Inlet-pressure switch is not included.	In the controller	O9	●	●	-	-
Dry-running protection - digital input	-	Digital input is visible on the wiring diagram.	In the controller	O10	●	●	-	-
Fault light, pump		The fault light is on if a fault occurs in the pump. Order one fault light for each pump.	In the door of the controller	O11	-	-	-	-

Operating-panel options					Included in pre-defined Control MPC standard			
Option		**Description**	**Location**	**Options (type key for Control MPC)**	**A**	**B**	**E**	**F**
Operating light, pump		The operating light when the relevant pumps is in operation. Order one operating light for each pump.	In the door of the controller	O12	-	-	-	-
Fault light, system		The fault light is on if a fault occurs in the system. Phase failure causes no fault indication.	In the door of the controller	O13	-	-	-	-
Operating light, system		The operating light is on when the system is in operation.	In the door of the controller	O14	-	-	-	-
Ammeter	-	An ammeter indicates the current of one phase per pump. Order one ammeter for each pump. Current: • 6 A • 16 A • 25 A • 40 A • 100 A • 160 A • 250 A • 400 A.	In the door of the controller	O15	-	-	-	-
Voltmeter	-	A voltmeter indicates the mains voltages between mains phases and between the neutral conductor, N, and the mains phases. Order one voltmeter for each pump. Description: • Voltmeter, 500 V (two phases) • Voltmeter, 500 V, with changeover switch (all phases)	In the door of the controller	O16	-	-	-	-
Pilot pump control	-	With this option the Control MPC is prepared for connection, meaning that it includes fuses and motor starter. The pilot pump is visible on the wiring diagram.	In the controller	O17	-	-	-	-
Main switch with door interlock	-	The door of the controller can only be opened if the main switch is in off position.	In the controller	O18	-	-	-	-
Main switch for neutral conductor	-	The main switch for switching off the neutral conductor is only used in connection with single-phase motors. Select this option according to the local rules for the installation site. As standard, the main switch does not switch off the neutral conductor. For further description, see section Main switch for neutral conductor.	In the controller	O19	-	-	-	-
Phase-failure monitoring	-	Protect the system against phase failure. A potential-free switch is available for external monitoring.	In the controller	O20	-	-	-	-
Panel light and socket	-	The panel light is on when the door of the controller is open. Panel lights for 50 Hz are in accordance with EN 60529/10.91. The panel light and socket are to be connected to a separate power supply. Type: • 14 W, 240 V, 50 Hz, socket • 14 W, 220-230 V, 50 Hz, socket • 14 W, 120 V, 60 Hz, socket	In the controller	O21	-	-	-	-
Transient-voltage protection	-	The transient-voltage protection protects the system against high-energy transients. Range: • 3 x 400 V, N, PE, 50/60 Hz • 3 x 400 V, PE, 50/60 Hz	In the controller	O22	-	-	-	-

Operating-panel options					Included in pre-defined Control MPC standard			
Option		**Description**	**Location**	**Options (type key for Control MPC)**	**A**	**B**	**E**	**F**
Lightning protection	-	The system can be protected against strokes of lightning. The lightning protection is in accordance with IEC 61024-1:1992-10, class B & C. Additional earthing facilities must be arranged by the customer at the installation site. Range: • 3 x 400 V, N, PE, 50/60 Hz • 3 x 400 V, PE, 50/60 Hz	In the controller	O23	-	-	-	-
Backup battery		The battery is connected to the CU 352 as a backup in case the power supply is interrupted.	In the controller	O24	-	-	-	-
Ethernet	-	Ethernet entry outside the controller for easy connection. The Ethernet connection makes it possible to get easy and unlimited access to the setting and monitoring of the Hydro MPC from a remote PC.	Cable entry at the bottom of the controller	O25	-	-	-	-
Beacon	-	The beacon is on in case of a system alarm. Phase failure causes no alarm indication.	On top of the controller External [17]	O26	-	-	-	-
Audible alarm	-	The audible alarm sounds in case of a system alarm. Sound pressure level: • 80 dB(A) • 100 dB(A).	In the controller	O27	-	-	-	-
Motor filter (LC)	-	The motor filter is mounted in panel for CUE -/ EC systems. Control MPC uses Sinus filters as standard. Other types are on request.	In the controller	O28	-	-	-	-

[17] Cable is not included.

All options can be added to the predefined package choice.

● Included in the predefined package.

- Not included in the predefined package.

Related information

Main switch for neutral conductor

Main switch for neutral conductor

Description	Nominal current of system [A]
Main switch for switching off the neutral conductor	40
	100
	175
	250
	400
	630
	800
	1250
	1750
	2000
	2500

13. Accessories

All accessories can be fitted to the Hydro MPC system after delivery.

Option		Description
Dry-running protection	-	The system must be protected against dry running. Dry-running protection by means of level switches is used in installations where the system draws water from a tank or well. For further description, see section Dry-running protection.
Diaphragm tank		A diaphragm tank can be installed on the outlet side of the system. The diaphragm tanks are separate tanks without valve, fittings and pipes. For further data, see section Diaphragm tank.
Foot valve		Foot valves are typically used in minor systems with suction lift, for example when Hydro MPC draws water from a break tank placed at a lower geodetic height than the system. Foot valves are designed to ensure optimum inlet conditions. For further description, see section Foot valve.
Adjustable vibration damper		The vibration damper reduces any vibrations from the system to the floor allowing the system to be height-adjusted by ± 20 mm. For further description, see section Adjustable vibration damper.
Grundfos GO	-	Grundfos GO is used for wireless infrared or radio communication with the pumps. Various Grundfos GO variants are available. For further description, see section Grundfos GO.
MI 301		The MI 301 is a module with built-in infrared and radio communication. Use the MI 301 in conjunction with an Android- or iOS-based Smartphone with a Bluetooth connection. The MI 301 has a rechargeable Li-ion battery and must be charged separately. For further description, see section Grundfos GO.

Dry-running protection

Description	Product number
Level switch including 5 metres of cable [18]	96020142

[18] The input for the level switch is not included.

See section Optional equipment, Hydro MPC.

Only one type of dry-running protection can be selected, as it must be connected to the same digital input as CU 352. This also applies to level switches.

Related information

Optional equipment, Hydro MPC

Diaphragm tank

Diaphragm tank, 10 bar

Capacity [litres]	Connection	Product number
8	G 3/4	96528335
12	G 3/4	96528336
18	G 3/4	96528337
24	G 1	96528339
33	G 1	96528340
60	G 1	96528341
80	G 1	96528342
100	G 1	96528343
130	G 1	96528344
170	G 1	96528345
240	G 1	96528346
300	G 1	96528347
450	G 1	96528348
600	G 1 1/2	96603451
800	G 1 1/2	96603452
1000	G 1 1/2	96603453
1500	DN 65	96573283
2000	DN 65	96573284
3000	DN 65	96573285

Diaphragm tank, 16 bar

Capacity [litres]	Connection	Product number
8	G 3/4	96573347
12	G 3/4	96573348
25	G 3/4	96573349
80	G 1	96603420
100	G 1	96603421
200	G 1 1/4	96603422
300	G 1 1/2	96603423
400	G 1 1/2	96603424
500	G 1 1/2	96603425
600	G 1 1/2	96603426
800	G 1 1/2	96603427
1000	G 1 1/2	96603428

Foot valve

Description	Connection	Product number
Foot valve	Rp 2	956120
	Rp 3	956130
	Rp 4	956449
	Rp 5	956459
	Rp 6	956461

Adjustable vibration damper

Description	Pump	Product number
Vibration damper	CR, CRI, CRE, CRIE 3 and 5	96412344
	CR, CRI, CRE, CRIE 10 to 20	96412345
	CR, CRE 32 to 90	96412347

The product number covers one (1) vibration damper.

Grundfos GO

The Grundfos GO is used for wireless infrared or radio communication with the pumps.

MI 301

The MI 301 is a module with built-in infrared and radio communication. The MI 301 must be used in conjunction with an Android or iOS-based Smartphone with a Bluetooth connection. The MI 301 has rechargeable Li-ion battery and must be charged separately.

TM053890

MI 301

Supplied with the product:

- Grundfos MI 301
- battery charger
- quick guide.

Product numbers for MI 301

Grundfos GO variant	Product number
Grundfos MI 301	98046408

Additional documentation

The documents and publication numbers below refer to printed documentation of Hydro MPC.

Document	Document type	Publication number
Hydro MPC	Installation and operating instructions	96605907
Hydro MPC	Quick guide	96605941

In addition to printed documentation, Grundfos offers product documentation in Grundfos Product Center at www.grundfos.com. See section Grundfos Product Center.

Related information

15. Grundfos Product Center

14. Alternative systems

System	Data and features	
Hydro Multi-E 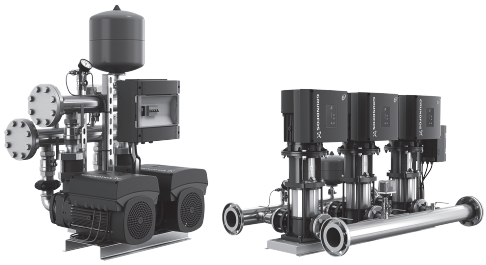	Maximum head	10 to 145 m
	Flow rate	2 to 144 m^3/h
	Maximum operating pressure	16 bar
	Number of pumps	2 or 4
	Pump type	CRE, CRIE, CME
	Features	Specially designed for water supply in buildings. 100 % adaptation to consumption. Easy to install and commission. Small footprint. Data communication via Grundfos R100 remote control or Grundfos GO.

15. Grundfos Product Center

Online search and sizing tool to help you make the right choice.
From the international view, you can select your specific country to view the product range available to you.
International view: *https://product-selection.grundfos.com*

All the information you need in one place

Performance curves, technical specifications, pictures, dimensional drawings, motor curves, wiring diagrams, spare parts, service kits, 3D drawings, documents, system parts. The Product Center displays any recent and saved items - including complete projects - right on the main page.

Downloads

On the product pages, you can download installation and operating instructions, data booklets, service instructions, etc., in PDF format.

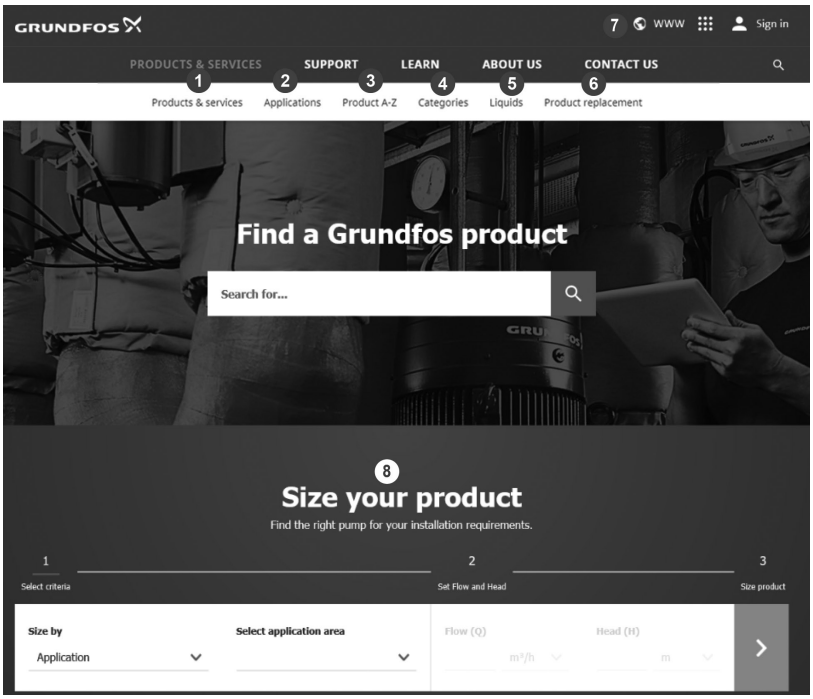

When you select your country, you will see the menus below. Note that some menus may not be available depending on the country.
Example: *https://product-selection.grundfos.com/uk*

Pos.	Description
1	**Products & services** enables you to find products and documents by typing a product number or name into the search field.
2	**Applications** enables you to choose an application to see how Grundfos can help you design and optimise your system.
3	**Products A-Z** enables you to look through a list of all the Grundfos products.
4	**Categories** enables you to look for a product category.
5	**Liquids** enables you to find pumps designed for aggressive, flammable or other special liquids.
6	**Product replacement** enables you to find a suitable replacement.
7	**WWW** enables you to select the country, which changes the language, the available product range and the structure of the website.
8	**Sizing** enables you to size a product based on your application and operating conditions.

16. Grundfos GO

Mobile solution for professionals on the GO!

Grundfos GO is the mobile toolbox for professional users on the go. It is the most comprehensive platform for mobile pump control and pump selection, including sizing, replacement and documentation. It offers intuitive, handheld assistance and access to Grundfos online tools, and it saves valuable time for reporting and data collection.

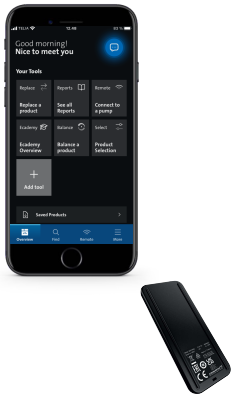

GET IT ON Google play

Available on the App Store

Trademarks displayed in this material, including but not limited to Grundfos and the Grundfos logo, are registered trademarks owned by The Grundfos Group. © 2023 Grundfos Holding A/S, all rights reserved.

98810512 **03.2023**
ECM: 1362449

GRUNDFOS Holding A/S
Poul Due Jensens Vej 7
DK-8850 Bjerringbro
Tel: +45 87 50 14 00
www.grundfos.com

GRUNDFOS