Hydro MPC, APAC range

Hydro MPC systems with 2 to 6 pumps
50/60 Hz

GRUNDFOS

Table of contents

1. System introduction 4
System description 4
Applications 4
Features and benefits 4

2. System data 6
Performance range 6
Product range. 7
Control variants 7
Type key 8
Nameplate 9
Sound pressure level. 9

3. Construction. 10
System structure. 10
CR pump 10
Motors. 10
Shaft seal 11
Base frame 11
Manifold 11
Flange. 11
Control cabinet 11
CU 352 12
IO 351 12

4. Control functions 13
CU 352 operating panel 13
Overview of functions 15
Constant-pressure control of E-system 15
Display language 15
Pump curve data 16
Redundant primary sensor 16
Automatic cascade control 16
Alternative setpoints 17
Log function 17
Specific energy calculation 17
Number of starts per hour 17
Standby pumps 17
Forced pump changeover 18
Pump test run. 18
Dry-running protection 18
Stop function 19
Setpoint ramp. 20
Pilot pump 20
Password. 21
Clock program 21
Proportional pressure 21
Soft pressure build-up 22
Emergency run 23
Reduced operation 23
Status display menu 23
Non-return valve 24
Multisensor settings 25
Counter inputs 25

5. Installation 26
Mechanical installation. 26
Electrical installation 27
Hygiene. 27

6. Sizing 28
Maximum flow requirement 29
Required outlet pressure 29
System layout. 30
Consumption profile and load profile 30
Inlet pressure 31
System selection. 31
Accessories 31
Example: How to select a system 33

7. Curve conditions 34
Understanding the performance curve 34
How to read the performance curve. 35

8. Curve charts, Hydro MPC-E, 50/60 Hz 36
Hydro MPC-E with CRE 3 36
Hydro MPC-E with CRE 5 37
Hydro MPC-E with CRE 10 38
Hydro MPC-E with CRE 15 39
Hydro MPC-E with CRE 20 40
Hydro MPC-E with CRE 32 41
Hydro MPC-E with CRE 45 42
Hydro MPC-E with CR, CRE 64 44
Hydro MPC-E with CR, CRE 95 46
Hydro MPC-E with CR, CRE 125 48
Hydro MPC-E with CR, CRE 155 50

9. Technical data, Hydro MPC-E, 50/60 Hz . . . 51
Hydro MPC-E with CRE 3 51
Hydro MPC-E with CRE 5 53
Hydro MPC-E with CRE 10 55
Hydro MPC-E with CRE 15 57
Hydro MPC-E with CRE 20 59
Hydro MPC-E with CRE 32 61
Hydro MPC-E with CRE 45 63
Hydro MPC-E with CR, CRE 64 65
Hydro MPC-E with CR, CRE 95 67
Hydro MPC-E with CR, CRE 125 69
Hydro MPC-E with CR, CRE 155 71

10. Optional equipment 73
Dry-running protection 75
Repair switch 75
Redundant primary sensor 75

11. Accessories 76
Dry-running protection 77
Diaphragm tank 77
Foot valve 77
Adjustable vibration damper 77
Grundfos GO 77

12. Product manuals 78

13. Alternative systems 79

14. Grundfos Product Center 80

15. Grundfos GO 81

1. System introduction

System description

As standard, the systems consist of two to six CR, CRE pumps connected in parallel and mounted on a common base frame with a control cabinet and all necessary fittings.

Pilot pump can be added in systems with high variating in flow demand to maintain high efficiency at low flow.

The pumps of the system can be removed without interfering with the pipes on either side of the manifolds.

For control variant, see section Product range and Control variants.

Hydro MPC-E/EC

- Systems are with two to six identical electronically speed-controlled pumps.
- Pipe connection is from R 2 to DN 400.
- Hydro MPC-E systems are from 0.37 to 22 kW equipped with CRE pumps with integrated frequency converter.
- Hydro MPC-EC systems are from 30 kW equipped with CR pumps connected to Grundfos CUE frequency converters; one per pump.

Related information

Product range

Control variants

Applications

The system is designed for the transfer and pressure boosting of clean water in places such as:

- water-supply systems
- irrigation systems
- industrial applications
- commercial buildings
- high-rise buildings.

Features and benefits

Perfect constant-pressure control

GR-1014555

CU 352

The pumps of the systems are controlled individually by the CU 352 multi-pump control unit which contains application-optimised software and pump curve data. CU 352 knows the exact hydraulic and electrical data of the pumps to be controlled. A log function monitors the system performance over a period of time.

User-friendliness

The system features a built-in startup wizard in a wide range of languages that guides the installer through a series of steps until the system is correctly installed and commissioned.

When the installation is complete, the large, user-friendly colour display ensures that day-to-day operations are equally easy.

Reliability

TM1040082

Grundfos CRE pumps

The system is built on the highly renowned Grundfos CR and CRE pump range. CR and CRE pumps are known for their reliability, efficiency and adaptability.

Every vital piece of the system is made by Grundfos. You are guaranteed long-lasting technology that requires a minimum of maintenance and provides a maximum of efficiency.

Low energy consumption

The Hydro MPC-E systems with Grundfos MGE motors from 0.37 to 22 kW have a total efficiency which exceeds the Super Premium Efficiency EuP IE5 level according to IEC 60034-30-1.

TM083139

Grundfos MGE motors

MG motors up to 55 kW meet the legislative requirements of the EuP IE3 level, and from 75 kW and up to 200 kW meets the legislative requirements of the EuP IE4 level.

Furthermore, the system uses pump curve data to calculate and optimise the cut-in and cut-out of pumps.

High-efficient motors, advanced control in combination with optimised hydraulics for both the CRE pump and the manifold ensure that the system uses a minimum of energy.

Flexibility

The elements of the system can be combined in a number of ways to make sure that we build the perfect solution for you.

Custom-built solutions

If this data booklet does not provide you with a solution that meets your specific pumping needs, contact Grundfos.

2. System data

Performance range

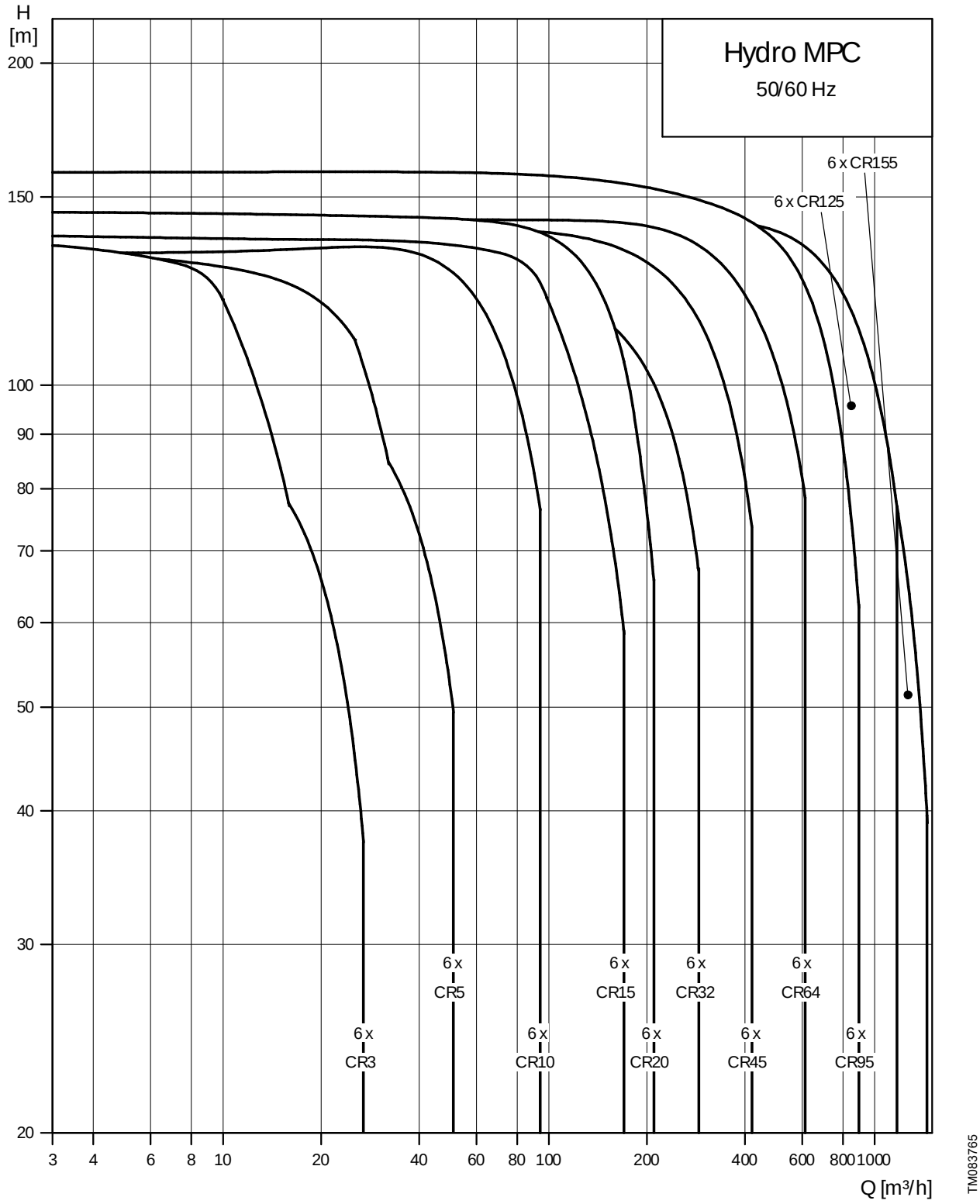

Product range

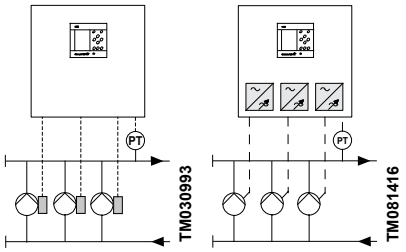

Control variant	Hydro MPC-E	Hydro MPC-EC
Frequency	**50/60 Hz**	
Hydraulic data		
Maximum head [m]	155	
Rated flow rate [m^3/h]	0-1460	
Liquid temperature [°C]	5-60 [1]	
Ambient temperature [°C]	0-40	
Relative humidity	95 %	
Maximum operating pressure [bar]	16 [2]	
Motor data		
Number of pumps	2-6	
Motor power [kW]	0.37 - 55 [3]	
Shaft seal	HQQE (SiC/SiC/EPDM)	
Materials		
CRE 3 to CRE 45, CR, CRE 64 to CR, CRE 155	Cast iron and stainless steel EN 1.4301 / AISI 304	
Manifold	Stainless steel [4]	
Pipe connection		
Union connection	R 2 - R 2 1/2	
DIN flange	DN 80 - DN 400	

1) Systems for lower and higher temperature are available on request.

2) Systems with a maximum operating pressure higher than 16 bar are available on request.

3) The Hydro MPC-E systems from 0.37 to 22 kW are fitted with speed-controlled CRE pumps with integrated frequency converters. The Hydro MPC-EC systems from 30 to 55 kW are fitted with CR pumps connected to Grundfos CUE frequency converters.

4) In some regions, galvanised manifolds are available as an option. For further information, contact Grundfos.

Related information

Control variants

Control variants

The table shows examples of systems.

Systems with speed-controlled pumps	
Hydro MPC-E	**Hydro MPC-EC**
System with three CRE pumps.	

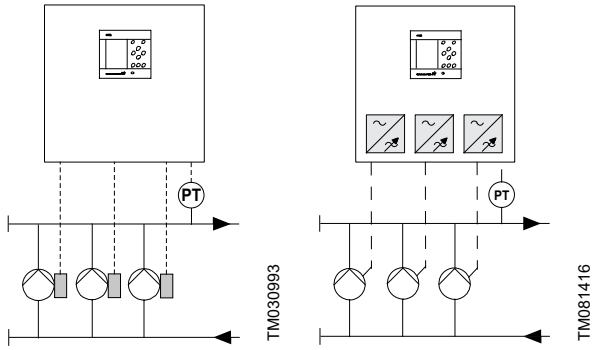

One CRE pump in operation.

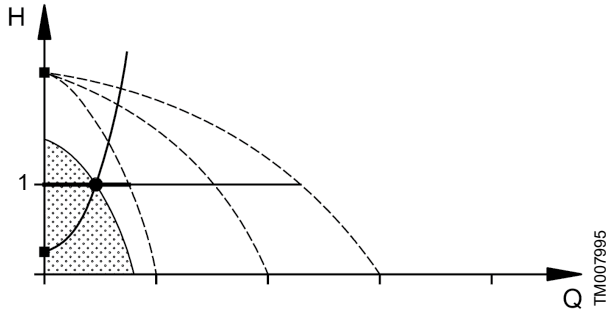

Three CRE pumps in operation.

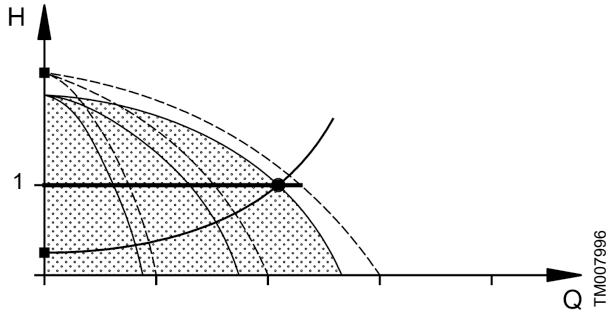

- The system maintains a constant pressure through continuous adjustment of the speed of the pumps.
- The system performance is adjusted to the demand through cutting in/out the required number of pumps and through parallel control of the pumps in operation.
- Pump changeover is automatic and depends on load, operating hours and fault.
- All pumps in operation will run at equal speed.

Type key

Example: Hydro MPC-E 6 CRNE155-1-1 U1 A-A-A-ABCD

Code	Explanation		Designation
Hydro MPC			System name
E	E: All pumps E Motor or CUE F: Fixed speed pumps, 1 CUE	S: Fixed speed pumps X: Customised system type	System type
6			Number of main pumps
CRNE155-1-1			Pump type
U1	U1: 3 x 380-415 V, N, PE, 50/60 Hz U2: 3 x 380-415 V, PE, 50/60 Hz U3: 3 x 380-415 V, N, PE, 50 Hz U4: 3 x 380-415 V, PE, 50 Hz U5: 3 x 380-415V, N, PE, 60 Hz U6: 3 x 380-415 V, PE, 60 Hz U7: 1 x 200-240 V, PE, 50/60 Hz U8: 1 x 200-240 V, N, PE, 50/60 Hz U9: 3 x 220-240 V, PE, 60 Hz	UA: 3 x 440-480 V, PE, 60 Hz UB: 1 x 220-240 V, N, PE, 50/60 Hz UC:1 x 220-240 V, N, PE, 50 Hz UD: 3 x 440-480 V, N, PE, 60 Hz UJ: 1 x 208-230 V, PE, 60 Hz UK: 3 x 208-230 V, PE, 60 Hz UL: 3 x 460-480 V, PE, 60 Hz UX: CSU variant (special voltage rating)	Voltage code
A	A: Systems with the control cabinet mounted on the same base frame as the pumps. B: Systems with the control cabinet centred on the base frame. E: APAC design. Systems with the control cabinet mounted on the same base frame as the pumps. F: APAC design. Systems with the control cabinet centred on the base frame. G: APAC design. Systems with the control cabinet mounted on its own base for floor mounting. The control cabinet can be placed up to 2 metres from the pumps. H: APAC design. Systems with the control cabinet mounted on its own base frame. The control cabinet can be placed up to 2 metres from the pumps. I: APAC design. Systems with the control cabinet prepared for wall mounting. The control cabinet can be placed up to 2 metres from the pumps. W: Systems with the control cabinet prepared for wall mounting. The control cabinet can be placed up to 2 metres from the pumps.		Design
A	A: E B: DOL C: SD		Starting method
A	A: Stainless steel manifold and base frame, and standard valves B: Stainless steel manifold, base frame and valves C: Galvanised steel manifold and base frame, and standard valves D: Stainless steel manifold, galvanised steel base frame, and standard valves H: Galvanised steel manifold and base frame painted black, and standard valves I: Stainless steel manifold and base frame painted black, and standard valves X: Customised material combination		Material combination
ABCD	A: Standard hydraulic, PN 16 B: Pilot pump C: Bypass D: NRV on inlet E: Elbow manifold F: No inlet manifold G: Diaphragm tank H: Dry-running protection I: Repair switch J: Redundant sensor or switch K: 1 free pump position L: 2 free pump position M: 3 free pump position	N: PN 10 pressure rating O: PN 25 pressure rating P: Low prepressure Q: PN 40 pressure rating R: RPM = 50 Hz S: Customised variant T: Certificate U: Undersized motor V: Standard controls with options W: Customised controls 3W: Hydro DDD panel X: More than 4 options Y: Control cabinet with double door	Option

Nameplate

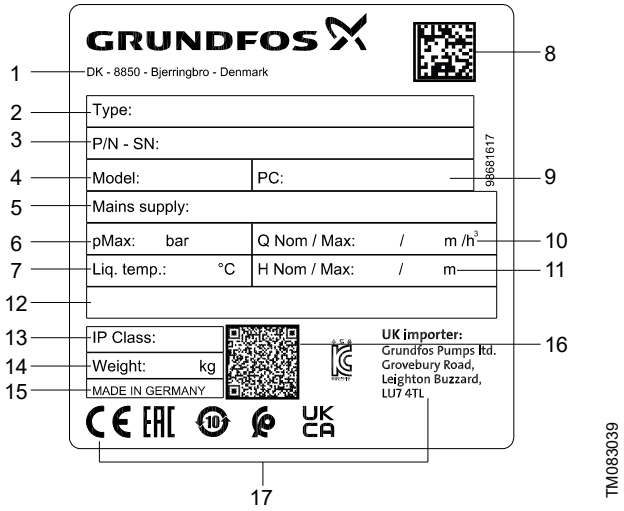

Nameplate example

Pos.	Description
1	Company address
2	Product type
3	Product number and Serial number
4	Model number
5	Mains supply
6	Max. operating pressure
7	Liquid temperature
8	Barcode
9	Production code
10	Nominal flow rate and maximum flow rate
11	Normal head and maximum head
12	Technical documents
13	IP class
14	Weight
15	Country of origin
16	QR code
17	Marks of approval

Sound pressure level

The sound pressure depends on the specific pump type and motor size and can be found in the installation and operating instructions of the pump.

In systems with multiple pumps the maximum total sound pressure $L_{p,tot}$ will increase according to the total number of pumps and can be calculated by the equation stated below.

Multiple sound sources may generally be added as[5)]

$$L_{p,tot} = 10Log_{10}\sum_{i} 10^{\frac{L_{p,i}}{10}}$$

This means that for a system including a number of identical pumps N, the total system sound level $L_{p,tot}$ may be obtained by adding the values below to the sound level of the specific pump type.

$$L_{p,tot} = L_p + \Delta L_p$$

Number of pumps N	ΔL_p dB(A)
1	0
2	3
3	5
4	6
5	7
6	8

5) Leo Beranek and Istvan L. Ver, *Noise and Vibration Control Engineering*, John Wiley and Sons, 1992

3. Construction

System structure

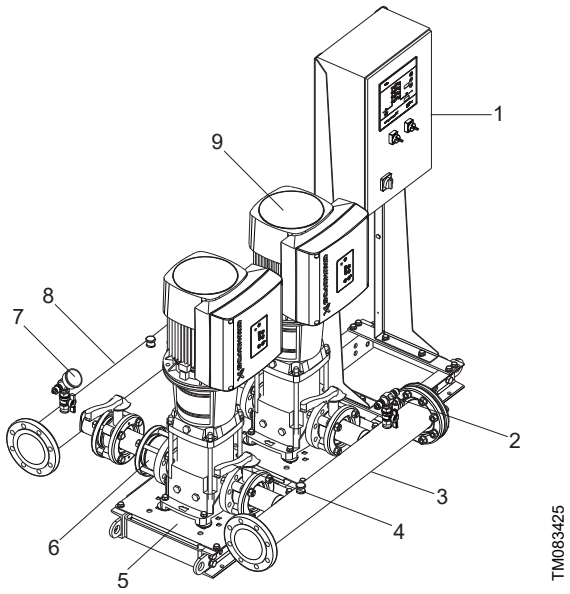

System structure

Pos.	Description	Quantity
1	Control cabinet	1
2	Pressure transmitter at inlet side	1
3	Inlet manifold	1
4	Isolating valve	two per pump
5	Base frame	1
6	Non-return valve	one per pump
7	Pressure transmitter and pressure gauge at outlet side	1
8	Outlet manifold	1
9	Pump	2-6

CR pump

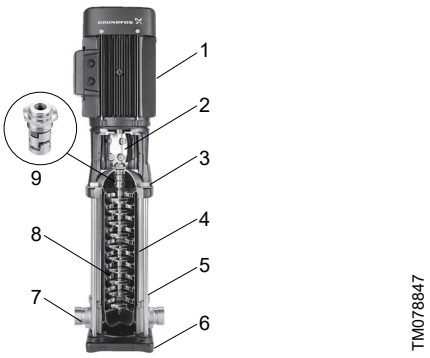

CR pump

Pos.	Description
1	Motor
2	Coupling
3	Pump head
4	Sleeve
5	Staybolts
6	Base plate
7	Base
8	Impeller
9	Shaft seal (cartridge type)

CR pumps are non-self-priming, vertical multistage centrifugal pumps.

Each pump consists of a base and a pump head. The chamber stack and outer sleeve are secured between the pump head and the base by means of staybolts. The base has inlet and outlet ports at the same level (in line) and of the same port size.

CRE pumps are based on CR pumps. The difference between the CR and CRE pump is the motor. CRE pumps are fitted with a motor with integrated frequency converter.

CR and CRE pumps have pump head and base of cast iron.

All hydraulic parts are made of stainless steel.

For further information, see the documents in section Product manuals.

Related information

12. Product manuals

Motors

CRE pumps

CRE pumps are fitted with a totally enclosed, fan-cooled, permanent magnet motor with integrated frequency converter.

Principal dimensions are in accordance with EN standards.

Electrical tolerances to EN 60034.

Motors with integrated frequency converter require no external motor protection. The motor incorporates thermal protection against slow overloading and seizure, class TP 211 according to IEC 34-11.

For further information, see the pump installation and operating instructions.

Shaft seal

All pumps have a maintenance-free mechanical cartridge type HQQE shaft seal. Seal faces are silicon carbide. Rubber parts are of EPDM.

Other shaft seal variants are available on request.

GR3395H

Cartridge shaft seal

You can replace the shaft seal without dismantling the pump. You can replace the shaft seal of pumps with motors of 11 kW and up without removing the motor.

For further information, see the document in section Product manuals.

Related information

12. Product manuals

Base frame

The pumps in the system are mounted on a common base frame. The base frame is made of black painted steel. CRE 125 and CRE 155 pumps are mounted on a base frame made of galvanised C-channels.

Manifold

A stainless steel manifold (AISI 316/EN DIN 1.4571/EN DIN 1.4404) is fitted on the inlet and outlet side of the pumps.

In some regions, AISI 304 and galvanised manifolds are available as an option. For further information, contact Grundfos.

An isolating valve and a non-return valve are fitted between the outlet manifold and the individual pumps. The non-return valve can be fitted on the inlet side on request.

An isolating valve and a check valve are fitted between the outlet manifold and the individual pumps. The check valve can be fitted on the inlet side on request.

Flange

PN 16 flanges, DN 80-400

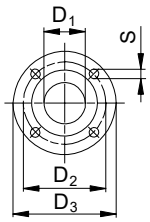

TM027720

	Standard: EN 1092-2 PN 16 (1.6 MPa)									
	Nominal diameter (DN)									
DN	**80**	**100**	**125**	**150**	**200**	**250**	**300**	**350**	**400**
D_1	80	100	125	150	200	250	300	350	400
D_2	160	180	210	240	295	355	410	470	525
D_3	200	220	250	285	340	405	460	520	580
S	8 x 19	8 x 19	8 x 19	8 x 23	12 x 23	12 x 28	12 x 28	16 x 28	16 x 28

Control cabinet

The control cabinet is fitted with all the necessary components. If necessary, the system is fitted with a fan to remove surplus heat generated by the frequency converter.

The control cabinet is divided into different designs:

Control cabinet variants

Variants	Description	Examples
Design E	APAC design. Systems with the control cabinet mounted on the same base frame as the pumps.	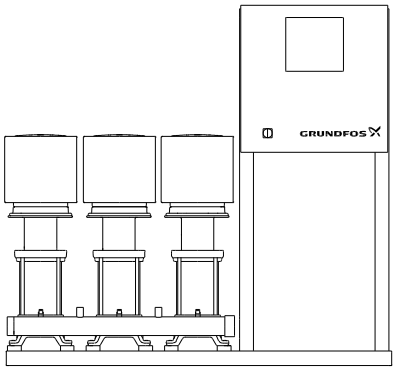 TM086207

Variants	Description	Examples
Design G	APAC design. Systems with the control cabinet mounted on its own base for floor mounting. The control cabinet can be placed up to 2 metres from the pumps.	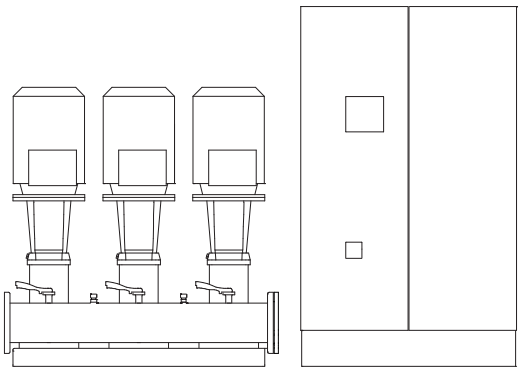 TM086209
Design H	APAC design. Systems with the control cabinet mounted on its own base frame. The control cabinet can be placed up to 2 metres from the pumps.	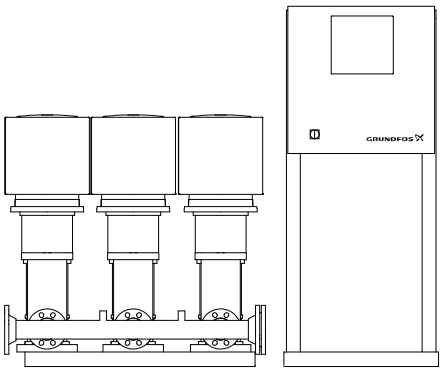 TM086210

CU 352

The CU 352 multi-pump control unit of the system is located in the door of the control cabinet.

GR-1014555

CU 352

The CU 352 features a colour display, ten buttons and two indicator lights. The operating panel enables manual setting and change of parameters such as setpoint, start/stop of system or individual pumps.

The CU 352 has application-optimised software for adapting the system to the application in question.

IO 351

IO 351 is a module for exchange of digital and analog signals between CU 352 and the remaining electrical system via GENIbus. IO 351 is available in the A and B variants.

IO 351A and IO 351B

IO 351A

IO 351A is used for one to three mains-operated Grundfos pumps.

IO 351B

IO 351B is used for one to six mains-operated Grundfos pumps and/or pumps controlled by external Grundfos CUE frequency converters. The module can also be used as an input-output module for communication with monitoring equipment or other external equipment.

4. Control functions

CU 352 operating panel

The operating panel on the front cover of the control cabinet features a display, a number of buttons and two indicator lights. The operating panel enables manual setting and monitoring of the performance of the system.

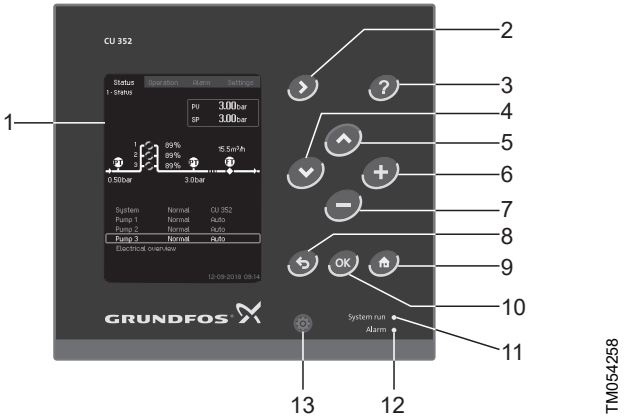

CU 352 operating panel

Pos.	Description
1	Display
2	Arrow to the right
3	Help
4	Down
5	Up
6	Plus
7	Minus
8	Esc.
9	Home
10	OK
11	Indicator light, operation (green)
12	Indicator light, fault (red)
13	Display brightness

Status menu

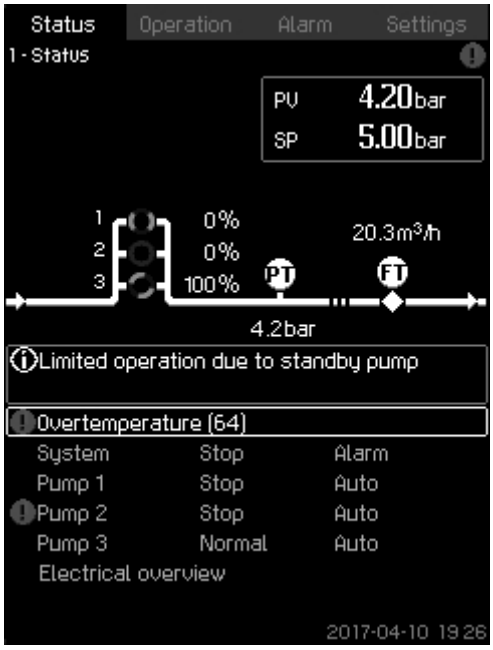

***Status** menu*

- Reading of process value (PV) of control parameter and selected setpoint (SP)
- graphical illustration of system (upper half of the display)
- indication if any incidents occurring during operation (middle of the display)
- reading of performance of system and individual pumps (lower half of the display)
- button ⓘ for further information
- active buttons are on.

Operation menu

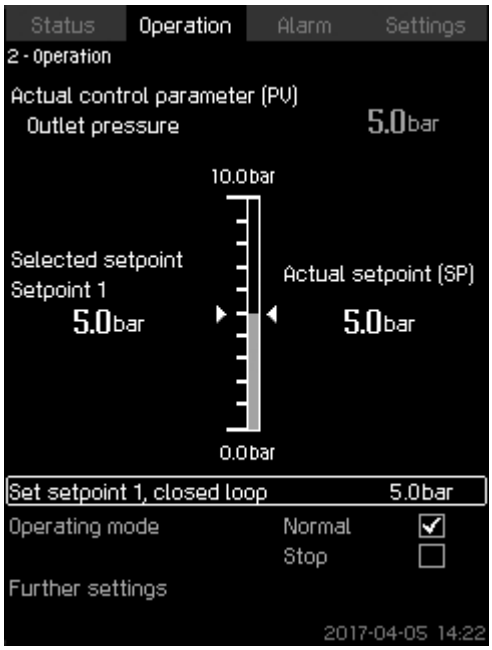

2_TM038950_002

***Operation** menu*

- Setting of basic parameters, for instance, setpoint or start/stop of system or individual pumps
- reading of selected setpoint and current setpoint
- button ⓘ for further information
- active buttons are on.

Alarm menu

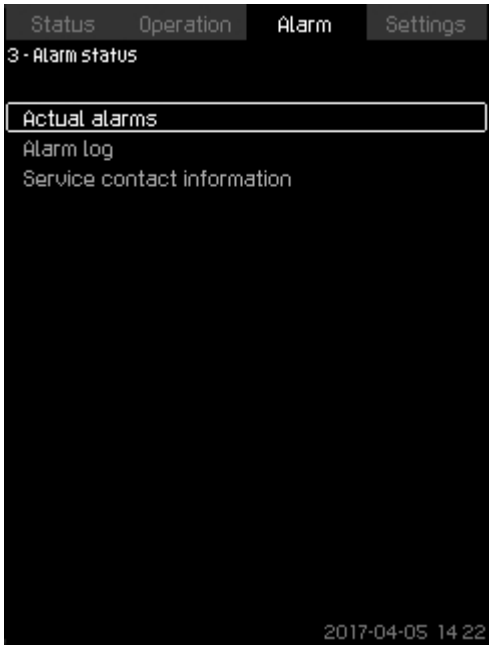

3_TM032291_003

***Alarm** menu*

- Overview of current warnings and alarms in clear text with detailed information:
  - Cause of the fault
  - remedy for the fault
  - where the fault occurred: system, pump no. 1, etc.
  - when the fault occurred (time and date)
  - when the fault disappeared (time and date)
  - whom to contact for service
- alarm log with up to 24 warnings and alarms
- button ⓘ for further information
- active buttons are on.

Settings menu

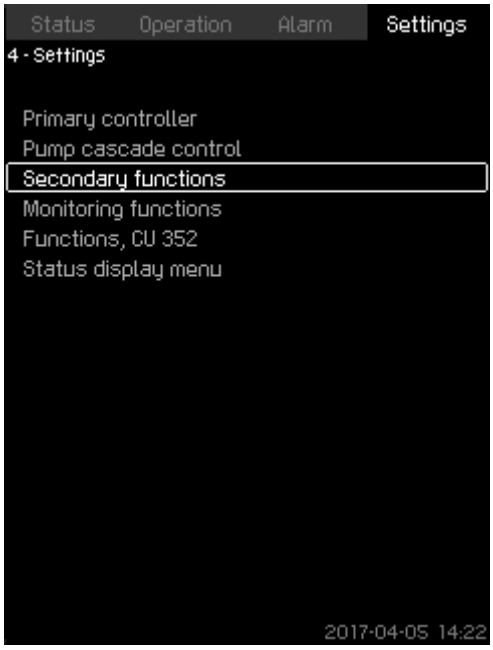

4_TM032294_004

***Settings** menu*

- Various settings:
  - **External setpoint influence**
  - **Redundant primary sensor**
  - **Standby pumps**
  - **Stop function**
  - **Proportional pressure**
  - **Display language**
  - **Ethernet**, etc.
- button ⓘ for further information
- active buttons are on.

Overview of functions

	Hydro MPC-E/EC
Functions via the CU 352 operating panel	
Alternative setpoints	●
Automatic cascade control	●
Clock program	●
Controlled output	●
Constant-pressure control	●
Dry-running protection [6)]	●
Emergency run	●
Flow estimation	●
Forced pump changeover	●
Limit 1 and 2 exceeded	●
Log function	●
Minimum changeover time	●
Monitoring of non-return valve [7)]	●
Multisensor	●
Number of starts per hour	●
Password	●
Pilot pump [6)]	●
Proportional pressure	●
Pump curve data	●
Pumps outside duty range	●
Pump test run	●
Reduced operation	●
Redundant primary sensor [6)]	●
Secondary sensor	●
Setpoint ramp	●
Specific energy calculation	● [8)]
Soft pressure buildup	●
Standby pumps	●
Stop function	●
Communication	
Ethernet connection	●
External GENIbus connection	❍
Other bus protocols: PROFIBUS, LonWorks, Modbus, GRM, GSM, BACnet MS/TP, Industrial Ethernet via CIM modules. For further information, see section Optional equipment.	❍

6) Hardware not supplied as standard, but the functionality is available in the control cabinet.

7) Systems with MGE motors, 0.37 - 22 kW.

8) Requires that a flowmeter is installed and connected.

● Standard.

❍ On request.

Related information

10. Optional equipment

Constant-pressure control of E-system

Constant-pressure control ensures that the system delivers constant pressure despite a change in consumption.

When taps are opened, water is drawn from the diaphragm tank, if installed. The pressure drops to a set cut-in pressure, and the first speed-controlled pump starts. The speed of the pump in operation is continuously increased to meet the demand. As the consumption rises, more pumps are cut in until the performance of the pumps in operation corresponds to the demand. During operation, CU 352 controls the speed of each pump individually according to the pump curve data downloaded into CU 352.

Furthermore, CU 352 regularly estimates whether pumps are to be cut in or out to ensure the best efficiency.

When the water consumption decreases, pumps are cut out one by one to maintain the set outlet pressure.

Display language

4-5-1_TM038987_116

Display language

You can select the language for the display via CU 352.

Options

- **English**
- **Danish**
- **German**
- **French**
- **Italian**
- **Spanish**
- **Portuguese**
- **Greek**
- **Dutch**
- **Swedish**
- **Finnish**
- **Polish**
- **Russian**
- **Korean**
- **Chinese**
- **Japanese**
- **Czech**
- **Turkish**
- **Hungarian**
- **Bulgarian**
- **Croatian**
- **Latvian**
- **Lithuanian**
- **Romania**
- **Slovak**
- **Slovenian**
- **Serbian Latin**
- **US English**
- **Indonesian**
- **Malay**
- **Estonian**

Pump curve data

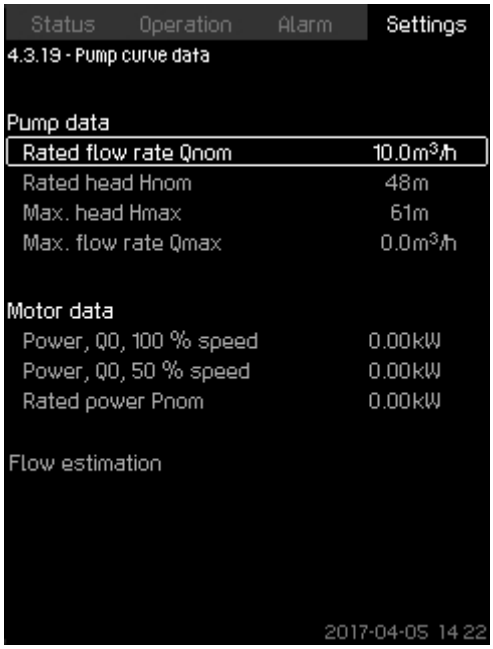

4-3-19_TM038975_104

Pump curve data

Pump curve data is loaded into the CU 352 control unit of the system at the factory.

The control unit uses pump curve data along with inlet and outlet pressure information to analyse and determine the operating point of each pump. This data is used to optimise the performance and minimise energy consumption and provides protection from running pumps outside their duty range.

Redundant primary sensor

A redundant sensor can be installed as backup for the primary sensor to increase reliability and prevent stop of operation. The redundant primary sensor can also act as a reference point in the outlet manifold of the system.

The redundant primary sensor is available as a factory-fitted option.

Automatic cascade control

The cascade control ensures that the performance of the system is automatically adapted to consumption by switching pumps on or off. The system thus runs as energy-efficiently as possible with constant pressure and a limited number of pumps.

Alternative setpoints

This function makes it possible to determine up to six setpoints as alternatives to the primary setpoint. The setpoints can be determined for closed loop and open loop. The performance of the system can thereby be adapted to other consumption patterns.

Example

A system is used for irrigation of a hilly golf course.

Constant-pressure irrigation of golf course sections of different sizes and at different altitudes may require more than one setpoint.

For golf course sections at a higher altitude, a higher outlet pressure is required.

Log function

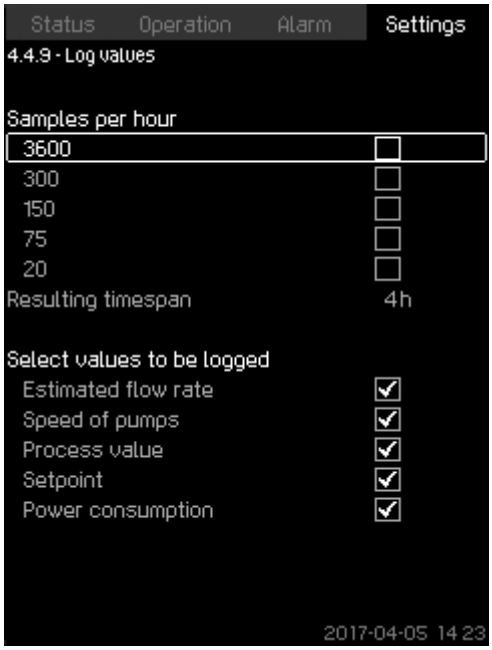

4-4-9_TM052973_181

Log values

The log function can monitor selected parameters. The data can be presented on the display or exported as a csv file via the built-in Ethernet connection.

Specific energy calculation

For MPC-E systems with a flow meter connected, CU 352 can calculate and show the specific energy used. There are two values displayed: the actual value and the average value.

Number of starts per hour

This function limits the number of pump starts and stops per hour. It reduces noise emission and improves the comfort of systems with mains-operated pumps.

Each time when a pump starts or stops, CU 352 calculates when the next pump is allowed to start or stop in order not to exceed the permissible number of starts per hour.

This function always allows pumps to be started to meet the requirement. However, pump stops can be delayed to avoid exceeding the permissible number of starts/stops per hour.

Standby pumps

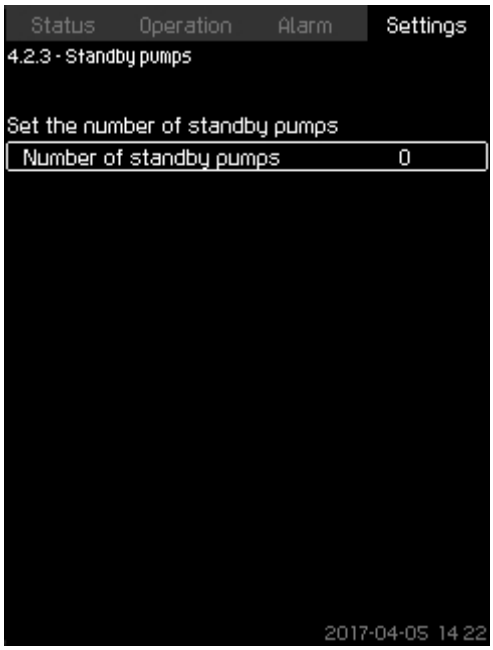

4-2-3_TM032366_075

Standby pumps

You can let one or more pumps function as standby pumps. For example, a system of four pumps with one designated to be a standby pump runs as a three-pump system.

If a pump is stopped due to a fault, the standby pump is cut in. This function ensures that the system can maintain the rated performance even if one of the pumps is stopped due to a fault.

The status of the standby pump alternates between all pumps of the same type, for instance electronically speed-controlled pumps.

Forced pump changeover

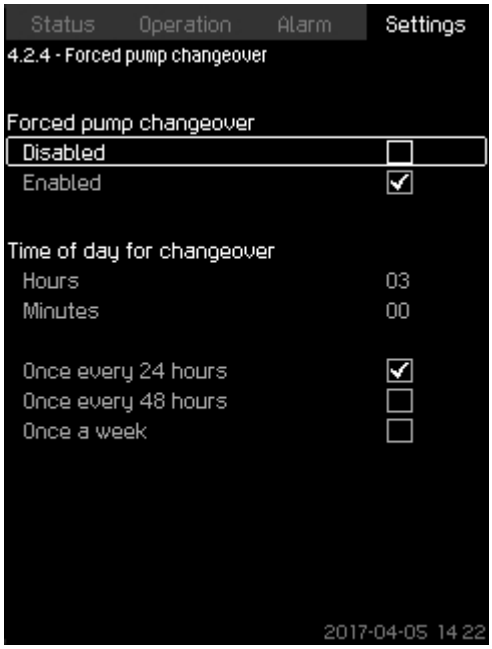

4-2-4_TM032365_058

Forced pump changeover

This function ensures that the pumps run for the same amount of operating hours over time.

In certain applications, the required flow remains constant for long periods and does not require all pumps to run. In such situations, pump changeover does not take place automatically, and forced pump changeover may be required.

Once every 24 hours, the control unit checks if any pump in operation has been running continuously for the preceding 24 hours.

If that is the case, the pump with the most number of operating hours stops and is replaced by the pump with the lowest number of operating hours.

Pump test run

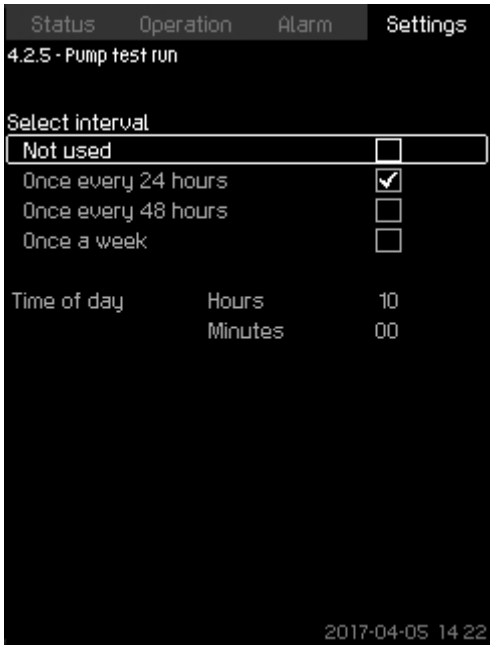

4-2-5_TM032364_057

Pump test run

This function is primarily used for connecting pumps that do not run every day.

Benefits:

- Pumps do not seize up during a long standstill due to deposits from the pumped liquid.
- The pumped liquid does not decay in the pump.
- Trapped air is removed from the pump.
- The pump starts automatically and runs for a short time.

Dry-running protection

This function is one of the most important ones, as dry running may damage bearings and shaft seals.

The inlet pressure of the system or the water level in a tank, if any, on the inlet side is monitored. If the inlet pressure or the water level is too low, all pumps stop.

Level switches, pressure switches or analog sensors indicating water shortage at a set level can be used. The system can also be reset and restarted manually or automatically after water shortage.

Stop function

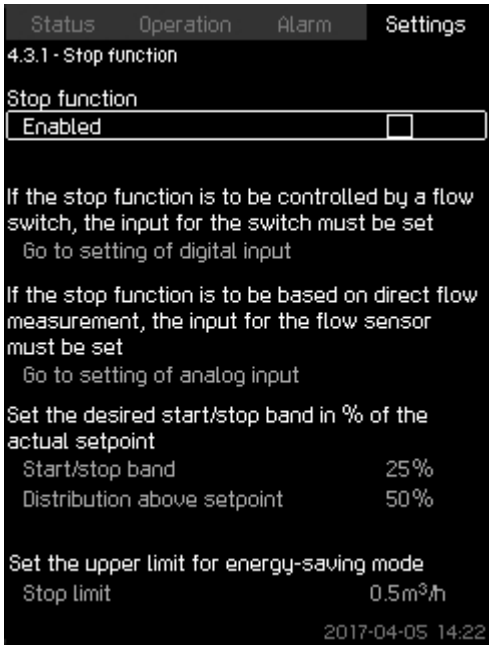

4-3-1_TM032355_102

Stop function

The stop function makes it possible to stop the last pump in operation if there is no or very small consumption.

Purposes are to:

- save energy
- prevent heating of shaft-seal faces due to increased mechanical friction as a result of reduced cooling by the pumped liquid
- prevent heating of the pumped liquid.

This function is only used in systems with variable-speed pumps.

When the stop function is enabled, the operation of the system is continuously monitored to detect a low flow rate. If CU 352 detects no or a low flow rate ($Q < Q_{min}$), it changes from normal constant-pressure operation to on/off control of the last pump in operation.

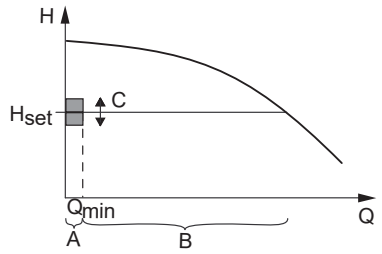

TM078147

On/off band

Pos.	Description
A	On/off control
B	Normal operation
C	Start/stop band

As long as the flow rate is lower than Q_{min}, the pump runs in on/off operation. If the flow rate rises above Q_{min}, the pumps return to normal constant-pressure operation.

Via CU 352, you can set the system to operate as energy-efficiently as possible or with the highest level of comfort.

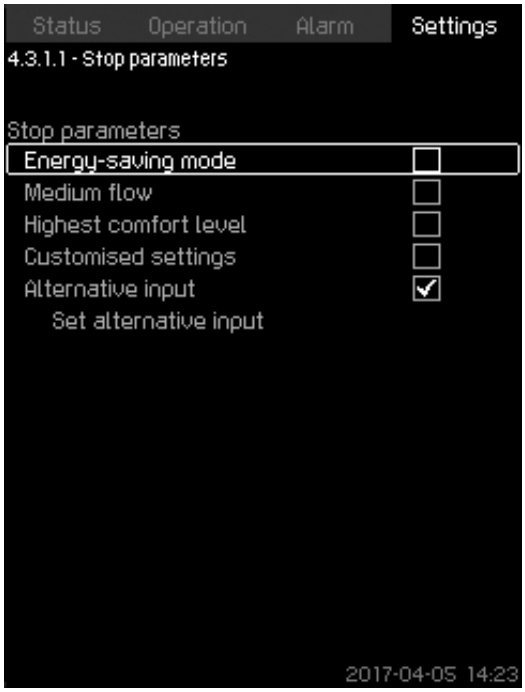

4-3-1-1_STOP_PARAMETERS_171

Stop parameters

Five stop parameters can be selected:

- **Energy-saving mode(factory setting)**
  It is the most energy-efficient mode possible.
- **Medium flow**
  It combines energy efficiency with high comfort.
- **Highest comfort level**
  It achieves the highest comfort level without too many pump starts or stops.
- **Customised settings**
  It allows for customized setup.
- **Alternative input**

It allows for defining the stop flow on the basis of the system setpoint, total tank volume or pre-charge pressure.

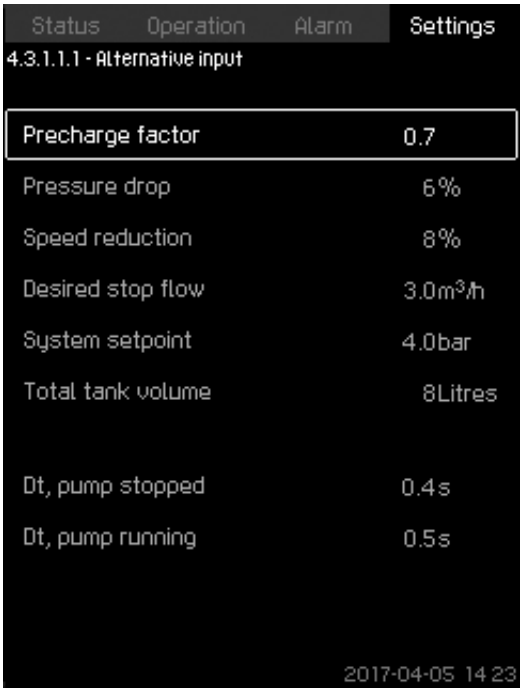

4-3-1-1-1_ALTERNATIVE_INPUT_201

Alternative input

Setpoint ramp

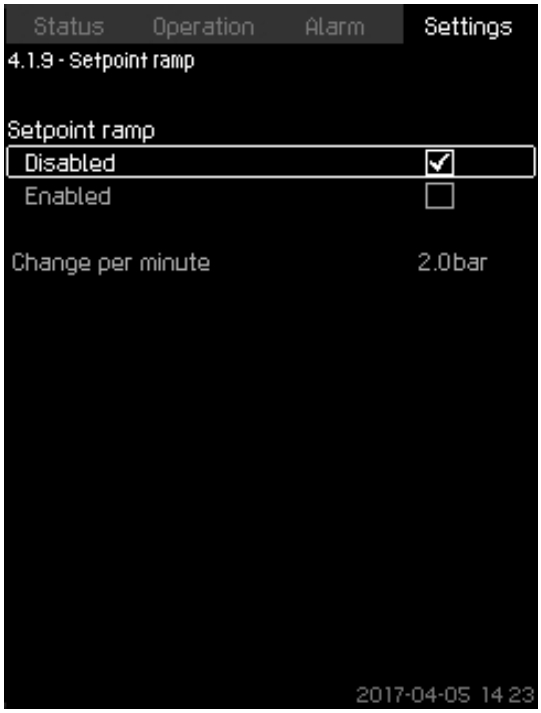

4-1-9_TM052969_174

Setpoint ramp

If this function is enabled, any setpoint change made via the control unit or clock program, when changing between alternative setpoints or via a SCADA system, will be made gradually over time. In this way, smooth setpoint changes can be made, thus causing no discomfort to the consumer.

Pilot pump

The pilot pump takes over the operation from the main pumps in periods when the consumption is so small that the stop function of the main pumps is activated.

Purpose:

- Reduce the necessary size of the diaphragm tank.
- Reduce the number of operating hours of the main pumps.

Password

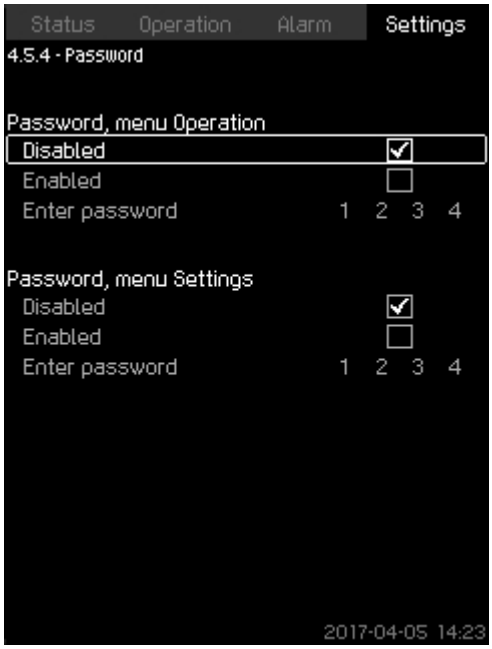

4-5-4_TM032899_115

Password

Passwords make it possible to limit the access to the **Operation** and **Settings** menus of the control unit. If the access is limited, it is not possible to view or set any parameter in the menus.

Clock program

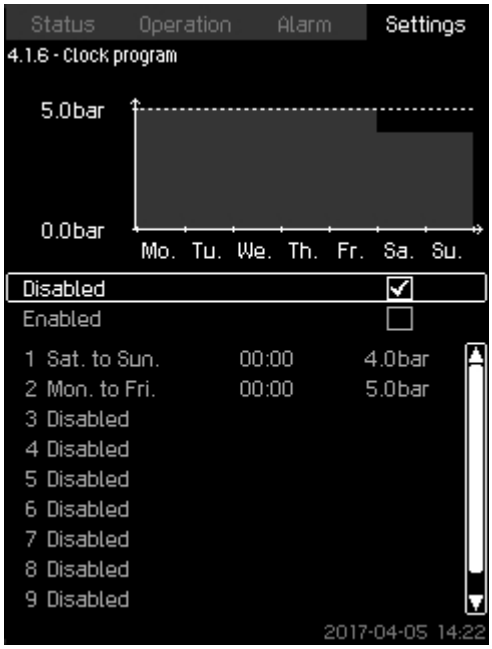

4-1-6_TM038990_129

Clock program

This function allows for specifying day and time for up to ten events, including activation or deactivation, for example, activating the sprinkling system of a golf course at fixed times for the individual greens.

Proportional pressure

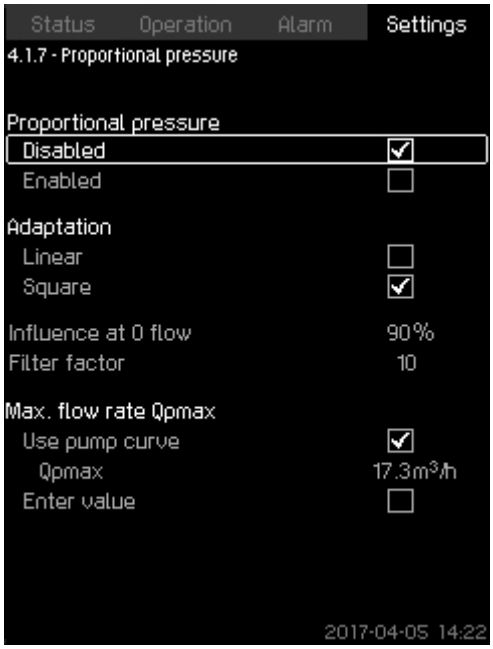

4-1-7_TM038960_130

Proportional pressure

This function can be used in applications with a large pipe system, for instance a village supplied with water from a pumping station or waterworks.

Purposes are to:

- deliver the required water at all times
- compensate for friction loss
- keep energy consumption at a minimum
- ensure the highest comfort level at tapping points, etc.
- minimise water loss from leaks
- reduce wear and tear on pipes.

With high flow rates, the pressure loss in the pipe system is relatively high. To deliver a system pressure of 5 bar in such a situation, the outlet pressure of the system must be set to 6 bar if the pressure loss in the pipe system is 1 bar.

In a low-flow situation, the pressure loss in the pipe system may only be 0.2 bar. Here the system pressure would be 5.8 bar if the setpoint was fixed to 6 bar. That 0.8 bar is too high compared with the peak situation above.

To compensate for excessive system pressure, the proportional pressure function of CU 352 automatically adapts the setpoint to the actual flow rate. The adaptation can be linear or square. Such an automatic adaptation results in large energy savings and optimum comfort at the tapping point.

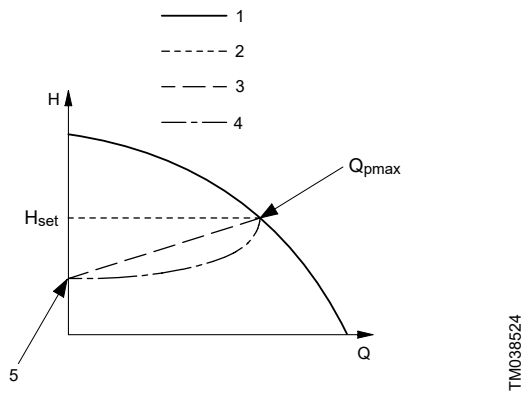

Proportional-pressure control

Pos.	Description
1	Pump curve
2	Setpoint
3	Resultant setpoint, linear
4	Resultant setpoint, square
5	Starting point of proportional-pressure control (influence at 0 flow = x % of H_{set})

Qp_{max} is the expected maximum flow rate. It can be set to either the maximum flow the system can deliver at a determined setpoint, or a value entered manually based on a known or assessed maximum flow rate.

Example

Influence at 0 flow (Q0) = pressure loss in supply pipe x 100 / setpoint.

Influence at 0 flow (Q0) = 1 bar x 100 / 6 bar = 16.67 %.

Setpoint at Q_{min} with proportional-pressure control:

6 bar - (6 bar x 0.1667) = 5 bar.

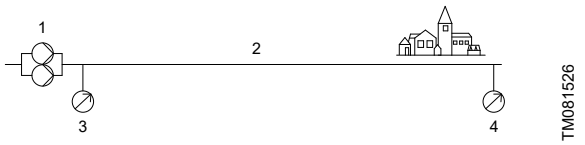

Without proportional-pressure control

Pos.	Description
1	Pumping station
2	Pressure loss Q_{max}: 1 bar Q_{min}: 0.2 bar
3	Setpoint: 6 bar
4	System pressure Q_{max}: 5 bar Q_{min}: 5.8 bar

Soft pressure build-up

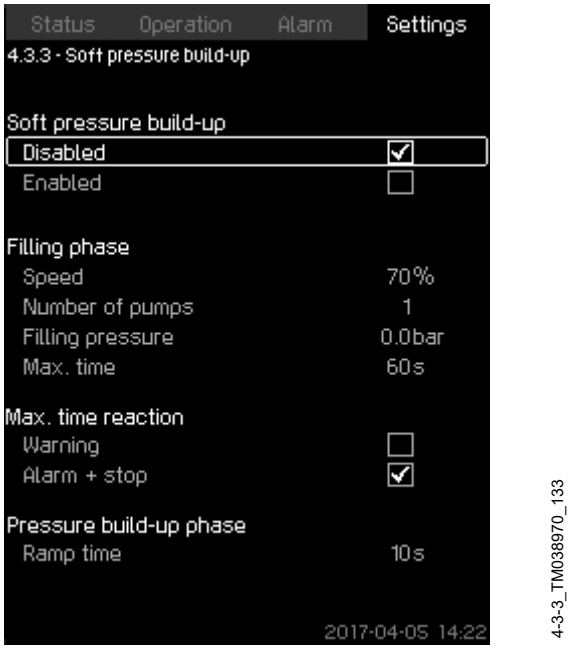

Soft pressure build-up

This function is typically used in pressure-boosting applications and ensures a smooth startup of systems with, for instance, empty pipes.

Startup takes place in two phases:

- **Filling phase** (1): The pipes are slowly filled with water. When the pressure sensor of the system detects that the pipes are filled, phase 2 begins.
- **Pressure build-up phase** (2): The system pressure is increased until the setpoint (SP) is reached. The pressure buildup takes place over a ramp time. If SP is not reached within a given time, a warning or an alarm can be given, and the pumps can be stopped at the same time.

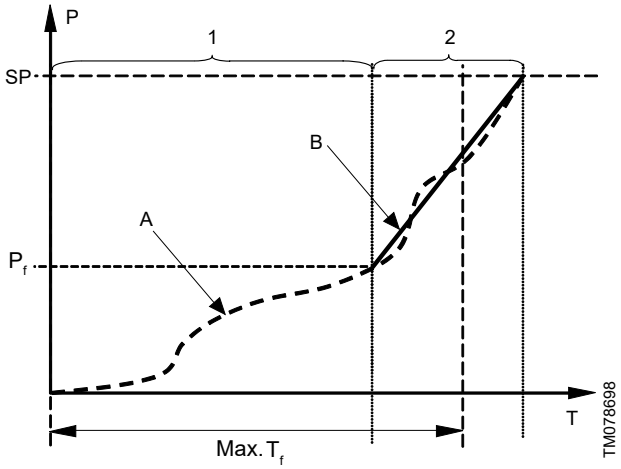

Filling and pressure buildup phases

P: Pressure	T: Time [second]
P_f: Filling pressure	T_f: Filling time

Pos.	Description
1	**Filling phase**: constant-curve operation
2	**Pressure build-up phase**: constant-pressure operation
A	Actual value
B	Setpoint ramp-up

Emergency run

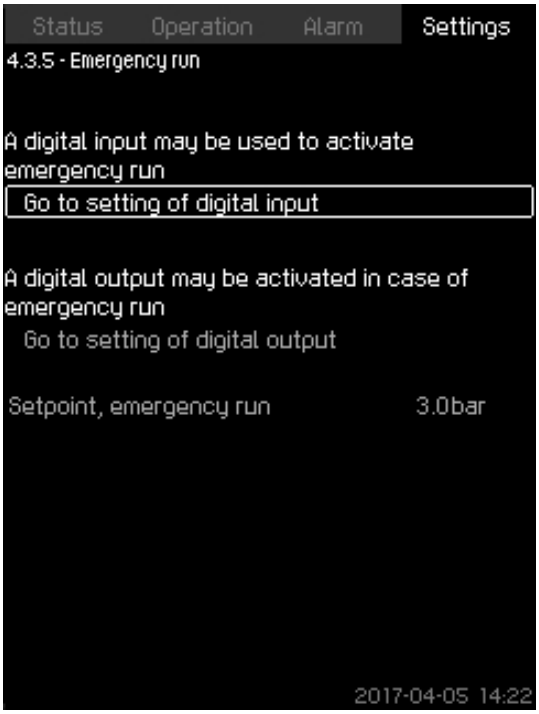

4-3-5_TM038971_132

Emergency run

This function is for systems where the operation must not be interrupted. The function keeps all pumps running regardless of warnings or alarms. The pumps run according to a setpoint set specifically for this function.

Reduced operation

This function makes it possible to reduce the operation of the system via a digital input. The function is used in applications where the mains power is sometimes switched to generator power. To avoid using more power than the generator can deliver, the system can be derated via a digital input.

Status display menu

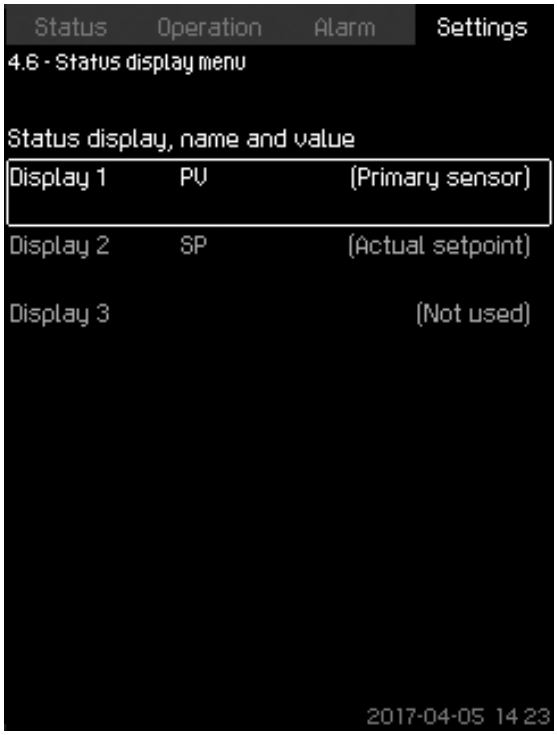

4-6_STATUS_DISPLAY_MENU_196

Status display menu

This main status menu can display up to three status values.

In this menu, you can define each status value and a name for the value.

Examples:

- PV: process value
- SP: setpoint
- Q: flow rate.

Setting range

1. Name of each display value.
2. Selection of displays 1 to 3.

Setting the display value

1. Go to the **Settings** menu.
2. Select **Status display menu**.
3. Mark the display and press **OK**.
4. Enter a name for display value.
5. Define the function of the display.

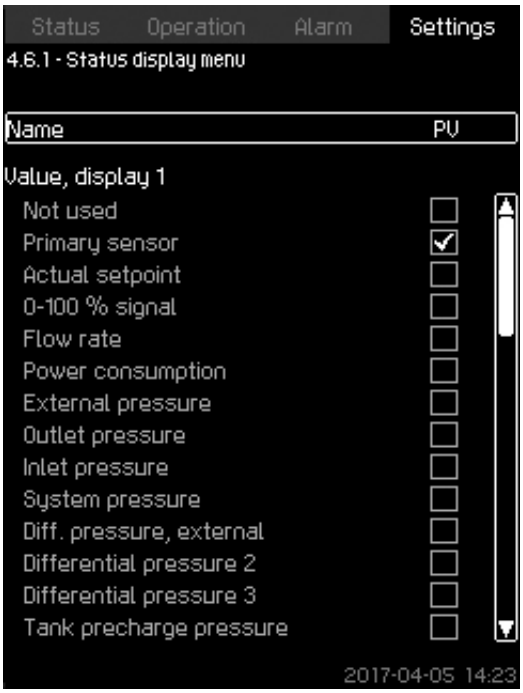

4-6-1_STATUS_DISPLAY_MENU_197

Status display menu

Factory settings

Display 1: PV, primary sensor.

Display 2: SP, actual setpoint.

Non-return valve

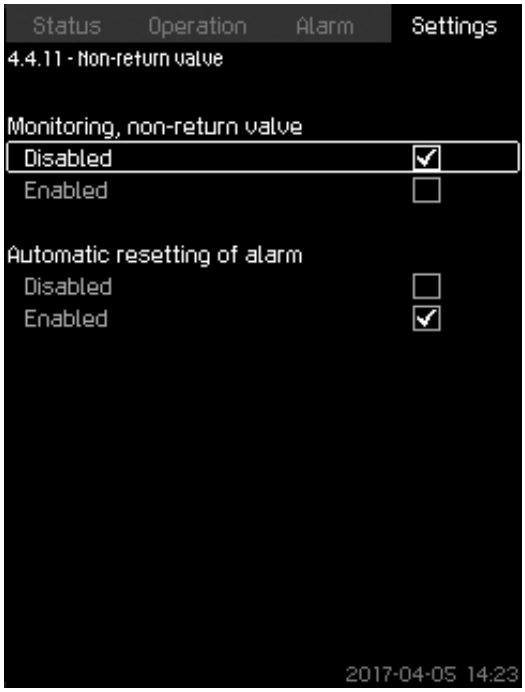

4-4-11_NON-RETURN_VALVE_202

Non-return valve

The function enables CU 352 to detect if a non-return valve is leaking or faulty. A small leakage after five accumulated incidents results in a warning. A faulty non-return valve will instantly result in an alarm and pump stop. In such case, the motor is not able to overcome the backflow through the pump with the faulty non-return valve.

The function is only valid for an MPC-E system with MGE motors, model F, G, H, I, J or K.

Multisensor settings

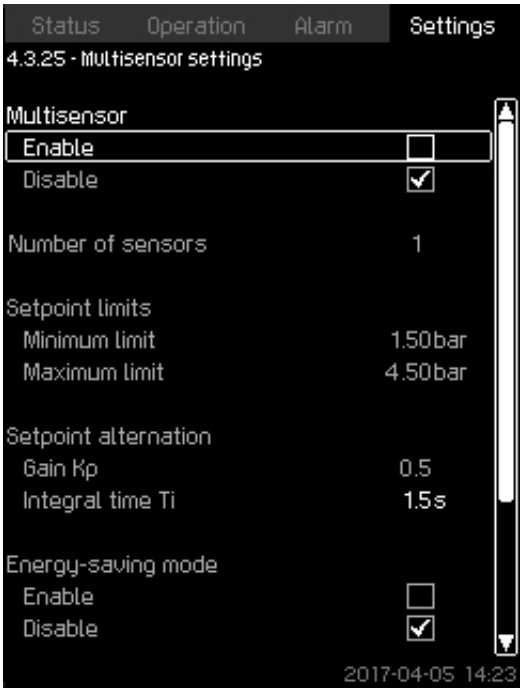

4-3-25_MULTISENSOR_186

Multisensor settings

The function is designed for controlling up to six different zones in a HVAC system with a defined differential-pressure band. If one of the multi-sensor signals is outside the specific sensor limits (minimum or maximum), the function adjusts the setpoint (SP) up or down to ensure that the specific sensor or zone is kept within its pressure band.

You can adjust the reaction of the setpoint influence by the means of dedicated setpoint alternation, Kp and Ti values.

If more sensors are below or above their limits, they can be prioritised. Through activating the energy-saving mode, the system can optimise the actual setpoint by lowering it to the minimum limit of one of the multisensors.

If the multisensor function is enabled, it has higher priority and the following programs are overruled:

- **Clock program**
- **Proportional pressure**
- **Alternative setpoints**
- **External setpoint influence**
- **Setpoint ramp**.

Counter inputs

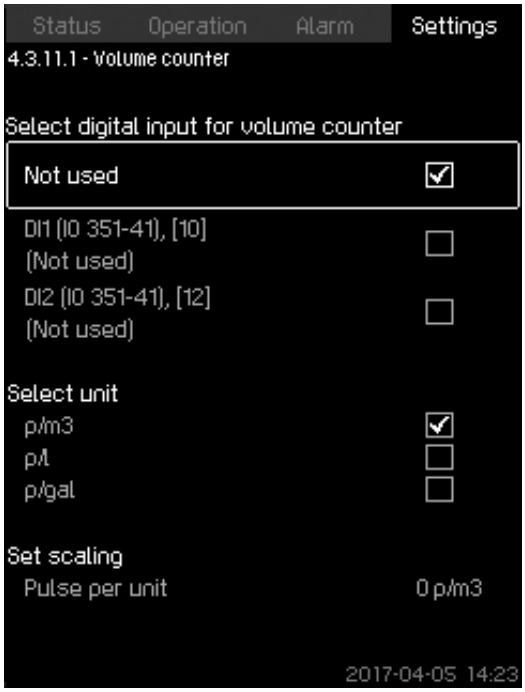

4-3-11-1_VOLUME_COUNTER_195

Volume counter

You can set CU 352 to accumulate a pumped volume from a digital water meter.

This menu only appears if an IO 351B module is connected to CU 352.

5. Installation

Mechanical installation

Location

The system is only designed for indoor installation and must not be exposed to direct sunlight.

- Install the system in a well-ventilated room to ensure sufficient cooling of the control cabinet and pumps.
- Install the system with a one-meter (3 ft) clearance on all sides for inspection and removal.

Pipes

Arrows on the pump base show the direction of flow of water through the pump.

The pipes connected to the system must be of adequate size.

Connect the pipes to the manifolds of the system. Either end can be used. Apply sealing compound to the unused end of the manifold, and fit the screw cap. For manifolds with flanges, fit a blanking flange with gasket.

To optimise operation and minimise noise and vibration, it may be necessary to consider vibration dampening of the system.

Noise and vibration are generated by the rotations in motor and pump and by the flow in pipes and fittings. The effect on the environment is subjective and depends on correct installation and the state of the other parts of the system.

If systems are installed in blocks of flats or the first consumer on the line is close to the system, we recommend that you fit expansion joints on the inlet and outlet pipes to prevent vibration from being transmitted through the pipes.

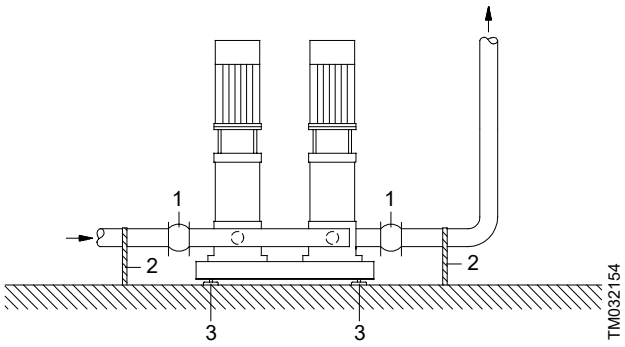

Example showing the position of expansion joints, pipe supports and vibration dampers

Pos.	Description
1	Expansion joint
2	Pipe support (and good location for system isolation valve)
3	Vibration damper

Expansion joints, pipe supports and vibration dampers shown in the figure above are not included in a standard system.

Foundation

We recommend that you install the system on an even and solid surface, such as a concrete floor or foundation. If the system is not equipped with vibration dampers, bolt it to the floor or foundation.

The weight of a concrete foundation must be at least 1.5 times the weight of the system.

Vibration dampers

To prevent the transmission of vibration to buildings, we recommend that you isolate the system foundation from the building parts by vibration dampers.

A proper damper varies in different installation situations, and a wrong damper may increase the vibration level. Vibration dampers must therefore be sized by the supplier. If the system is installed on a base frame with vibration dampers, always install expansion joints on the manifolds. This is important to prevent the system from "hanging" on the pipes.

Expansion joints

Fit expansion joints for these reasons:

- to absorb expansions or contractions in the pipes caused by changing liquid temperature
- to reduce mechanical strains in connection with pressure surges in the pipes
- to isolate mechanical structure-borne noise in the pipes (only rubber bellows expansion joints).

You must not install the expansion joints to compensate for inaccuracies in the pipes such as centre displacement of flanges.

Fit expansion joints at a distance of minimum 1 to 1 1/2 times the nominal flange diameter from the manifold on the inlet as well as on the outlet side. This prevents the development of turbulence in the expansion joints, resulting in better inlet conditions and a minimum pressure loss on the pressure side.

Examples of rubber bellows expansion joints without limiting rods

Examples of rubber bellows expansion joints with limiting rods

Expansion joints with limiting rods can be used to minimise the forces caused by the expansion joints. We always recommend that you use expansion joints with limiting rods for flanges larger than DN 100.

Anchor the pipes so that they do not stress the expansion joints, manifolds and the pump. Follow the supplier's instructions and pass them on to advisers or pipe installers.

Electrical installation

The electrical installation must be carried out by authorised personnel in accordance with local regulations.

- The electrical installation of the system must be carried out in accordance with enclosure class IP54.
- Check that the supply voltage and frequency correspond to the values stated on the nameplate. Contact Grundfos if you have special voltage requirements.
- Make sure that the conductor cross-section meets the specifications in the wiring diagram.
- The mains connection must be carried out as shown in the wiring diagram.

Hygiene

Grundfos systems are functionally tested and may therefore contain small amounts of residual water. Before using the system, it must be rinsed or flushed thoroughly. This also applies if the system has not been used for a longer period.

Rinsing and flushing must always be done in accordance with local regulations and practices. Contaminated drinking water can endanger health.

6. Sizing

When sizing a system, take the following into account:

- The performance of the system must meet the highest possible demand both in terms of flow rate and pressure.
- The system must not be oversized. This is important in relation to installation and operating costs.

You can size the systems via Grundfos Product Center or this data booklet.

Sizing in Grundfos Product Center (recommended)

We recommend that you size your system in Grundfos Product Center, which is a selection program offered by Grundfos. For further information, see section Grundfos Product Center.

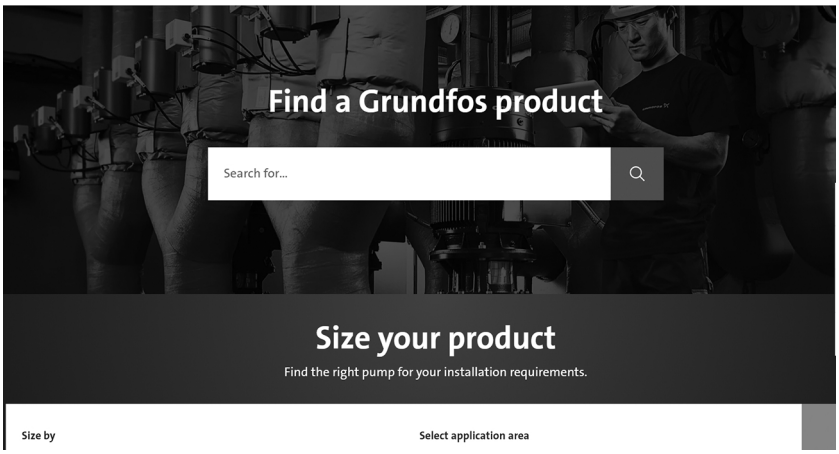

TM083490

Sizing in Grundfos Product Center

Sizing via this data booklet

There are seven steps:

1. maximum flow requirement
2. required outlet pressure
3. system layout
4. consumption profile and load profile
5. inlet pressure
6. system selection
7. accessories.

Related information

14. Grundfos Product Center

Maximum flow requirement

The total consumption and the required maximum flow rate depend on the application in question. The maximum flow requirement can be calculated by means of the table below which is based on statistical data.

Consumer	Unit	Q_{year}	Consumption period	Q_{day}	fd [9]	$Q(m)_{day}$	ft [10]	Maximum flow rate
		[m^3/year]	[days/year]	[m^3/day]		[m^3/day]		[m^3/h]
Residence building	Residence (2.5 persons)	183	365	0.5	1.3	0.65	1.7	0.046
Office building	Employee	25	250	0.1	1.2	0.12	3.6	0.018
Shopping centre	Employee	25	300	0.08	1.2	0.1	4.3	0.018
Supermarket	Employee	80	300	0.27	1.5	0.4	3.0	0.05
Hotel	Bed	180	365	0.5	1.5	0.75	4.0	0.125
Hospital	Bed	300	365	0.8	1.2	1.0	3.0	0.12
School	Pupil	8	200	0.04	1.3	0.065	2.5	0.007

9) Maximum consumption factor, day

10) Maximum consumption factor, hour

Example: Hotel with 540 beds

Number of beds:	n
Total annual consumption:	$Q_{year} \times n$
Consumption period:	d
Average consumption per day:	$(Q_{year} \times n) / d$
Maximum consumption per day:	$Q_{(m)day} = f_d \times Q_{day}$
Maximum flow requirement per hour:	Q_{max} = maximum flow rate/hour × number of beds.

Calculation

n	=	540 beds.
$Q_{year} \times n$	=	180 × 540 = 97,200 m^3/year.
d	=	365 days/year.
$(Q_{year} \times n)/d$	=	97,200/365 = 266.3 m^3/day.
$Q(m)_{day}$	=	$f_d \times Q_{day}$ = 1.5 × 266.3 = 399.4 m^3/day.
Q_{max}	=	Maximum flow rate/hour x number of beds = 0.125 × 540 = 67.5 m^3/h.

Note that the example above is based on Danish legislation DS442/1989 Code of Practice for common water-works. Calculation of water flow may vary from country to country depending on national guidelines and legislation.

Required outlet pressure

The required outlet pressure of the system can be calculated with the following equation:

p_{set}	=	$p_{tap(min)} + p_f + (h_{max}/10.2)$
p_{boost}	=	$p_{set} - p_{in(min)}$

Key

p_{set}	=	Required outlet pressure in bar
$p_{tap(min)}$	=	Required minimum pressure at the highest tapping point in bar
p_f	=	Total pipe friction loss in bar
h_{max}	=	Height from system outlet port to highest tapping point in metres
$p_{in(min)}$	=	Minimum inlet pressure in bar
p_{boost}	=	Required boost in bar

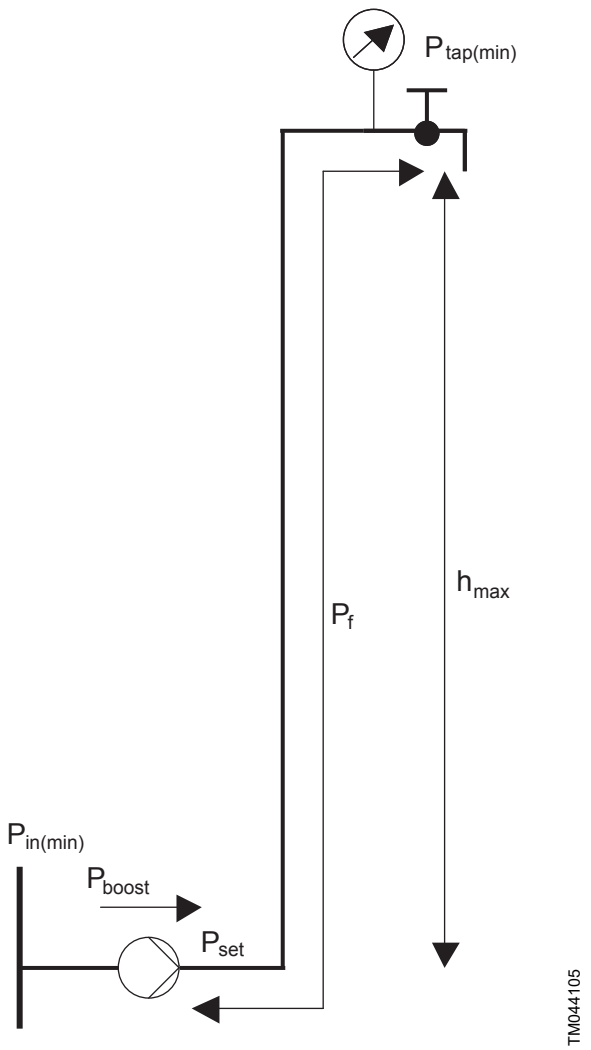

Calculation of required outlet pressure

Example calculation

$p_{tap(min)}$	=	2 bar
p_f	=	1.2 bar
h_{max}	=	41.5 m
$p_{in(min)}$	=	2 bar
p_{set}	=	2 + 1.2 + (41.5/10.2) = 7.3 bar
p_{boost}	=	7.3 - 2 = 5.3 bar

System layout

- Direct boosting

Example: The system is connected to water mains designed to distribute water from one place to another.

- Break tank

Example: The system is connected to a break tank installed before the system.

- Pressure boosting in zones

Example: A high-rise building or a hilly landscape where the water supply system is divided into zones.

- Roof tank

Example: The system distributes water to a roof tank on top of a high-rise building.

Consumption profile and load profile

The consumption pattern of the installation can be illustrated as a 24-hour consumption profile and a load profile.

24-hour consumption profile

The 24-hour consumption profile is the relation between the time of the day and the flow rate.

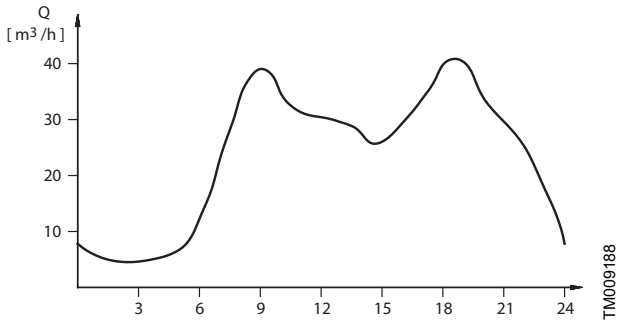

Example of a 24-hour consumption profile

If the consumption is variable and optimum comfort is required, use pumps with continuously variable speed.

Load profile

You can make the load profile when the 24-hour consumption profile has been determined.

The load profile gives an overview of how many per cent per day the system operates at a specific flow rate.

Duty point	Flow		Q		Hours	
1	100	%	67	m³/h	0.41	h/day
2	75	%	50.3	m³/h	0.82	h/day
3	55	%	36.9	m³/h	1.23	h/day
4	35	%	23.5	m³/h	2.45	h/day
5	12	%	8.04	m³/h	4.09	h/day

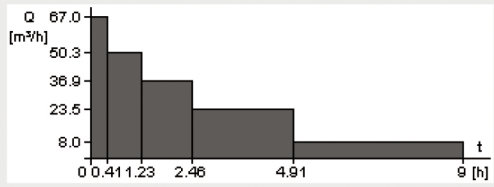

Load profile

Examples of typical 24-hour consumption profiles and their load profiles:

	Water supply	Industry	Irrigation
24-hour profile	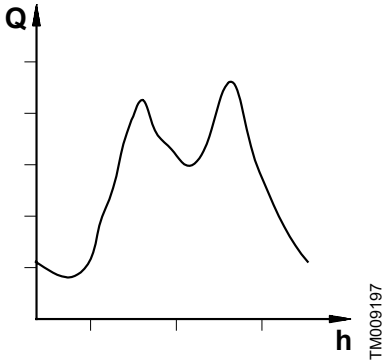	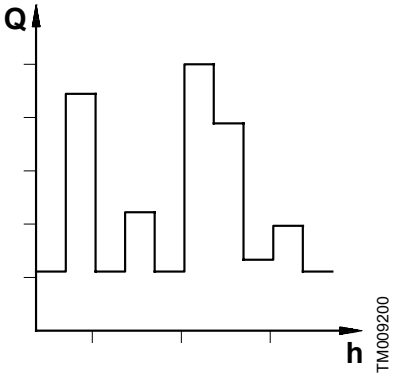	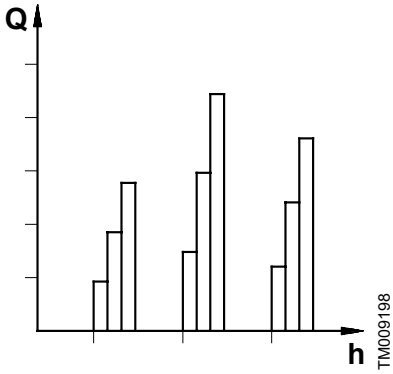
	Flow rate: Highly variable **Pressure:** Constant	**Flow rate:** Highly variable with sudden changes **Pressure:** Constant	**Flow rate:** Constant and known **Pressure:** Constant
Duty-time profile	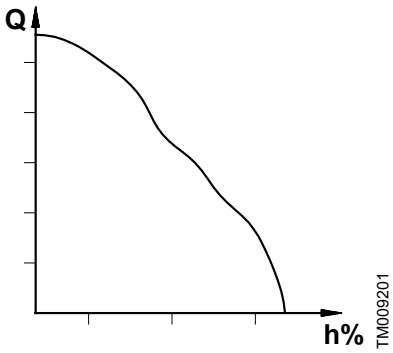	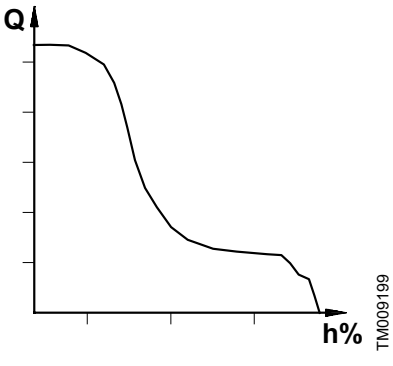	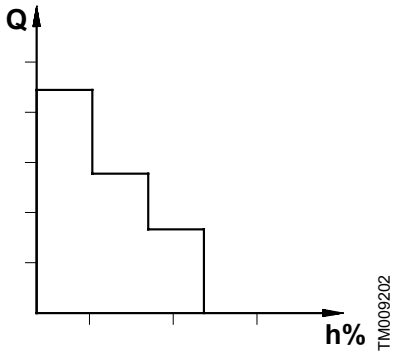
	Consumption is highly variable. Continuously variable speed control of the pumps is recommended.	Consumption is highly variable with sudden changes. Continuously variable speed control of the pumps is recommended.	Variations in consumption are regular, yet known. Simple control is recommended.

Inlet pressure

If there is a positive inlet pressure, take the inlet pressure into consideration to ensure safe and energy optimal operation.

Ensure that the system maximum head and the inlet pressure do not exceed the PN rating for the system.

System selection

Select the system on the basis of these factors:

- maximum flow requirement
- required outlet pressure
- load profile
- number of pumps required
- possible standby pumps.

Accessories

When you have selected the optimum system, consider whether you require any of the accessories mentioned below.

Dry-running protection

Every system must be protected against dry running.

The inlet conditions determine the type of dry-running protection:

- If the system draws water from a tank or a well, select a level switch or an electrode relay for dry-running protection.
- If the system has an inlet pressure, select a pressure transmitter or a pressure switch for dry-running protection.

Pilot pump

If a pilot pump is selected, size it according to the size of the main pumps in the system. The pilot pump should not be smaller than 1/5 of the flow of a main pump at the desired setpoint.

Diaphragm tank

The need for a diaphragm tank is estimated on the basis of the following guidelines:

- Due to the stop function, all systems in buildings must be equipped with a diaphragm tank.
- Normally, the systems in water-supply applications require no diaphragm tank, as miles of piping partly hold the necessary capacity, partly have the elasticity to give sufficient capacity.

To avoid the risk of water hammer, a diaphragm tank may be necessary.

- Estimate the need for a diaphragm tank for the systems in industrial applications from situation to situation on the basis of the individual factors on site.

If the system includes pilot pumps, the diaphragm tank is to be sized according to the capacity of this pump.

The tank consists of a bladder usually made of rubber. The water is contained in the bladder and does not come in direct contact with air in the tank. The bladder holding the water expands into the pressurized air space in the tank as it is filled. As water is used from the system, the bladder collapses until the water is almost emptied before the minimum pressure is reached, activating the system. The tank is pressurised at the factory, typically around 1.5 bar, but the pressure must be adjusted according to the setpoint using the air valve located near the top of the tank without any system pressure on the tank inlet.

- In E-systems, 0.7 x setpoint.

For further information about optional equipment and accessories, see sections Optional equipment and Accessories.

Recommended tank size V_0 can be calculated from the following equations:

Hydro MPC-E/EC

$$V_0 = \frac{K_Q \times Q \times (p_{set} + 1)^2 \times \left(\frac{3600}{N} - 10\right)}{3.6 \times (k_f \times P_{set} + 1) \times k_H \times P_{set}}$$

Symbol	Description
V_0	Tank volume
k_Q	The ratio between rated flow rate of the smallest pump in the system Q_{nom} and the flow rate Q_{min} at which the pump is changed to on/off operation $k_Q = Q_{min}/Q_{nom}$ It is only used in E-system where we have speed regulated pumps and can be set to 2-10 % depending on the pump size.
Q	Nominal flow rate of the smallest pump in the system
P_{set}	Setpoint of the system
k_H	The ratio between the on/off band ΔH and the setpoint P_{set}, $k_H = \Delta H/P_{set}$
k_f	The ratio between tank precharge pressure P_0 and the setpoint P_{set} $k_f = P_0/P_{set}$ 0.7 for Hydro MPC-E
N	Maximum numbers of start/stop per hour which depends on the motor type or size and the application, in systems with E-motors it is allowed to have up to 200 pr hour. All prefab MPC-E/EC systems delivered with tanks are calculated with this value.

Hydro MPC-E

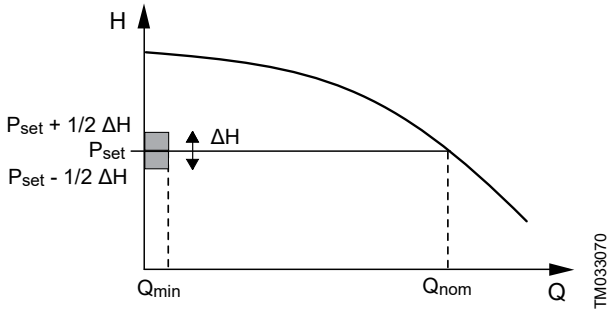

The tank values are based on the following data:

Symbol	Hydro MPC-E/EC
Q	Q_{nom} of one pump
k_Q	10 %
P_{set}	4 bar
k_H	20 %
k_f	0.7

Example of Hydro MPC-E with CRE 20

Symbol	Hydro MPC-E
Q [m^3/h]	10
k_Q	10 %
k_H	20 %
P_{set} [bar]	4
N [h^{-1}]	200
Result	
V_0 [litre]	18.3
Selected tank [litre]	18
ΔH [bar]	0.8
P_0 [bar]	2.8

For further information, see the document Tank calculation in E systems in section Product manuals.

Related information

10. Optional equipment
11. Accessories

Example: How to select a system

- A flow rate of 67.5 m^3/h is required.
- A head of 73 metres is required.

Draw a vertical line from the required flow rate.
Draw a horizontal line from the required head.
The intersection of the two lines gives the number of pumps required for the system (three CRE, CRIE 20-7).
The pump type best meeting this specification is found by means of the y-axis, for instance three CRE, CRIE 20-7.
Select only systems with performance ranges within the hatched area in the example.

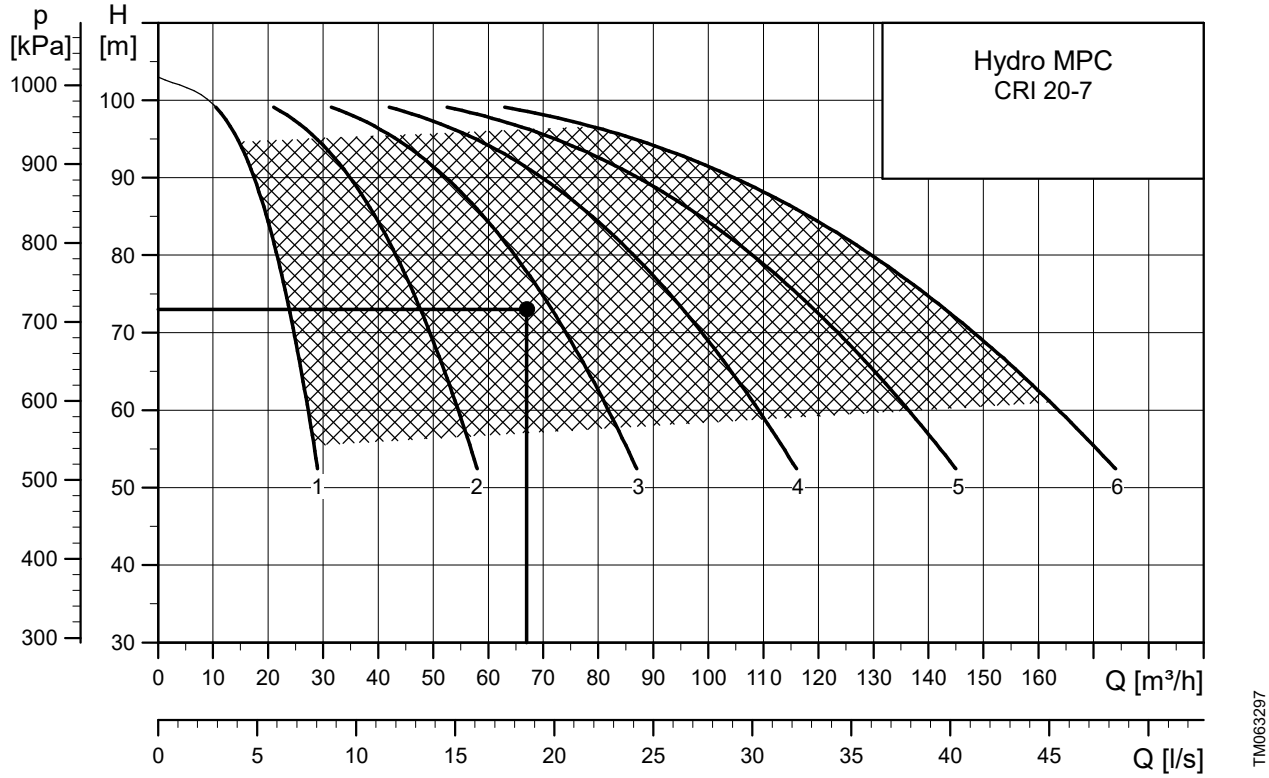

7. Curve conditions

Understanding the performance curve

The x-axis showing the flow rate (Q) in m^3/h is common to all the curves; the y-axis showing the head (H) in metres has been adapted to the individual pump type.

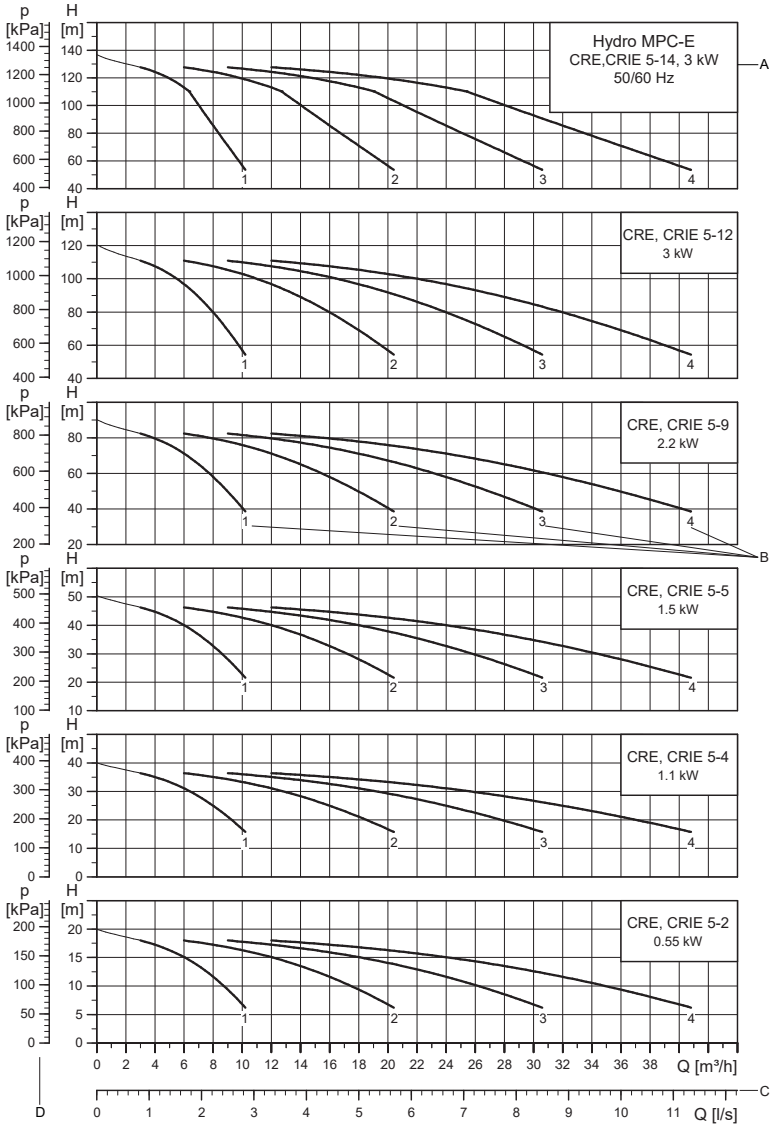

Pos.	Description
A	Specification of system, pump type, frequency and the standard to which the QH curves correspond.
B	Specification of system performance based on the number of pumps in operation: • 1: one pump in operation • 2: two pumps in operation • 3: three pumps in operation • 4: four pumps in operation.
C	The x-axis is common to all pump types.
D	The y-axis is adapted to the individual pump type.

How to read the performance curve

The guidelines below apply to the curves on the following pages:

- Measurements have been made with airless water at a temperature of 20 °C (68 °F).
- The curves apply to a kinematic viscosity: υ = 1 mm^2/s (1 cSt).
- The QH curves apply to fixed speeds of 2900 RPM at 50 Hz and 3480 RPM at 60 Hz.

  In most cases, the actual speed deviates from the above-mentioned speeds. For realistic curves, refer to Grundfos Product Center where the pump curves include the characteristics of the selected motor and therefore show curves at actual speeds. In Grundfos Product Center, you can also adjust the curves depending on the density and viscosity.

- The conversion between head H [m] ([ft]) and pressure P [kPa] ([psi]) applies to a specific weight equal to 8.3 lb/gal, water density of ρ = 1000 kg/m^3.

8. Curve charts, Hydro MPC-E, 50/60 Hz

Hydro MPC-E with CRE 3

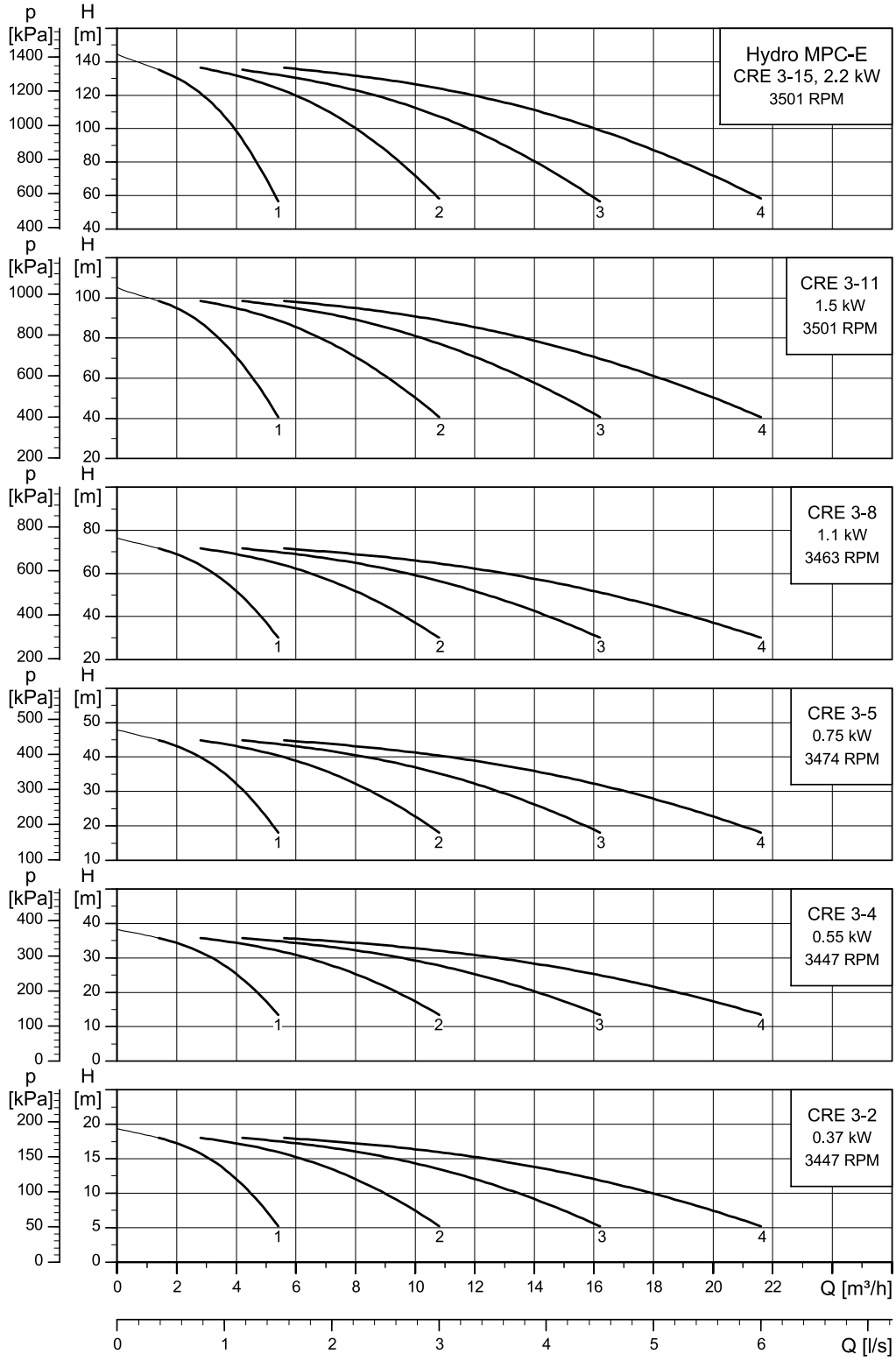

Losses in fittings and valves are not included.

Hydro MPC-E with CRE 5

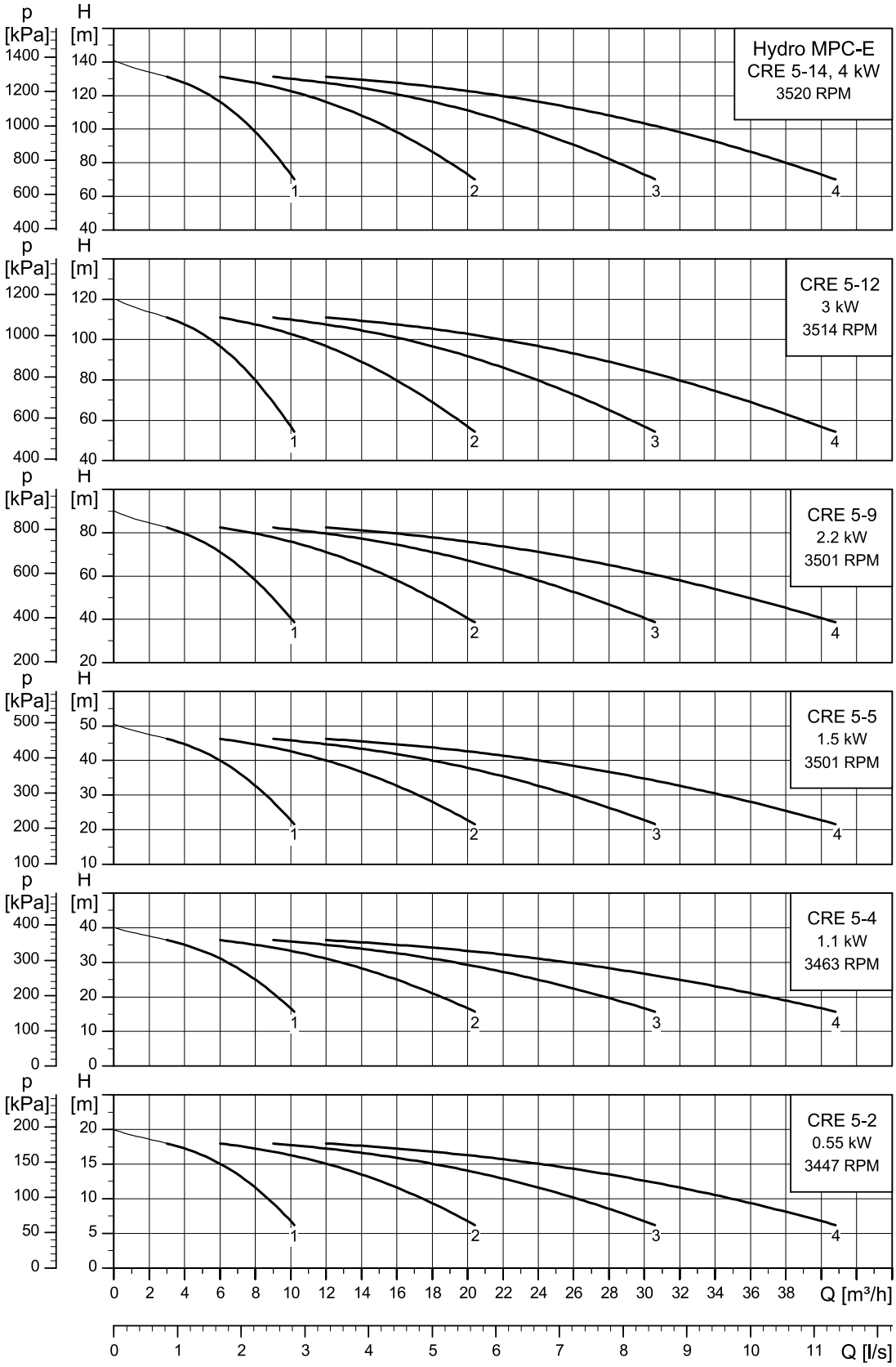

Losses in fittings and valves are not included.

Hydro MPC-E with CRE 10

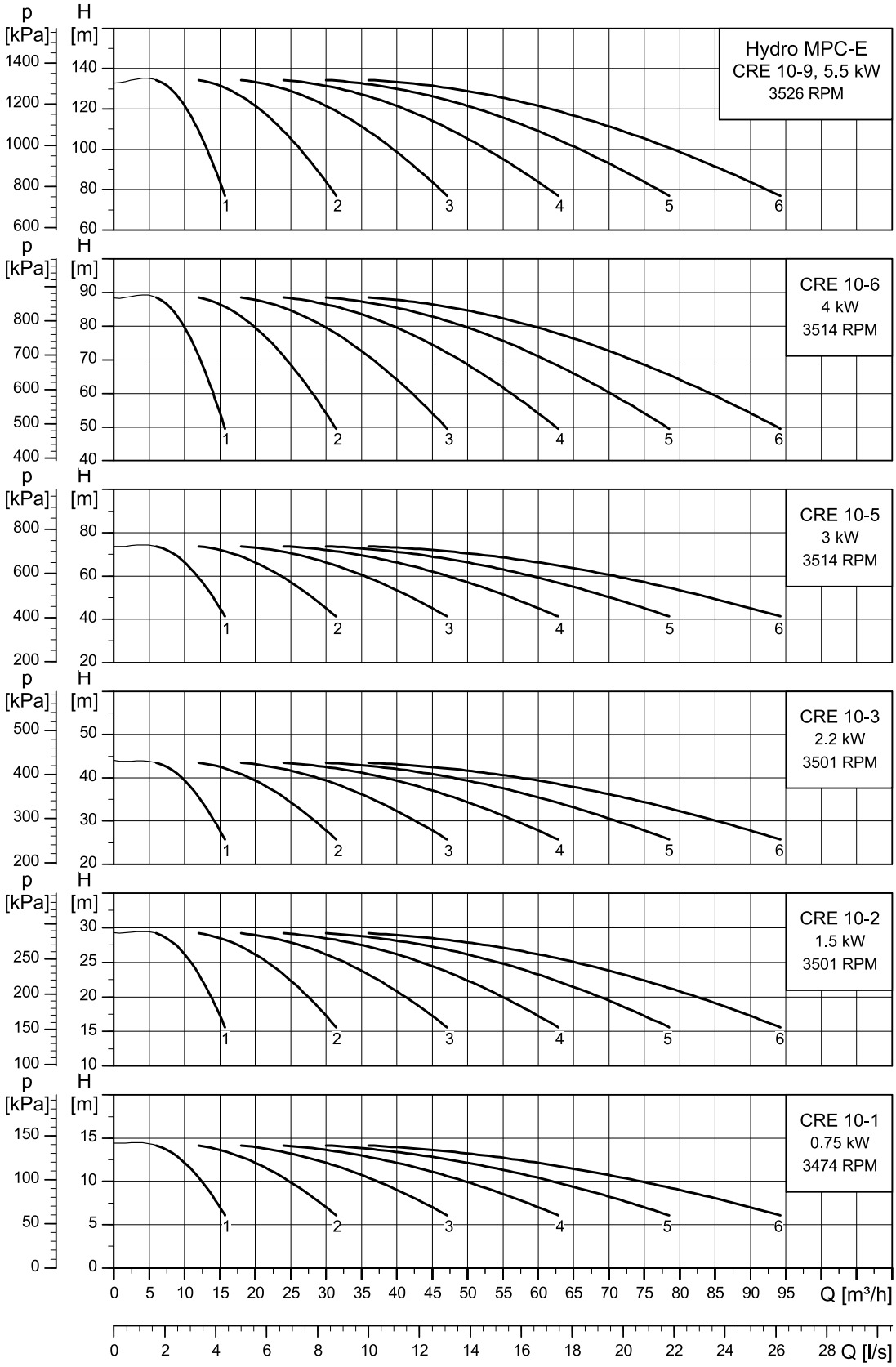

Losses in fittings and valves are not included.

Hydro MPC-E with CRE 15

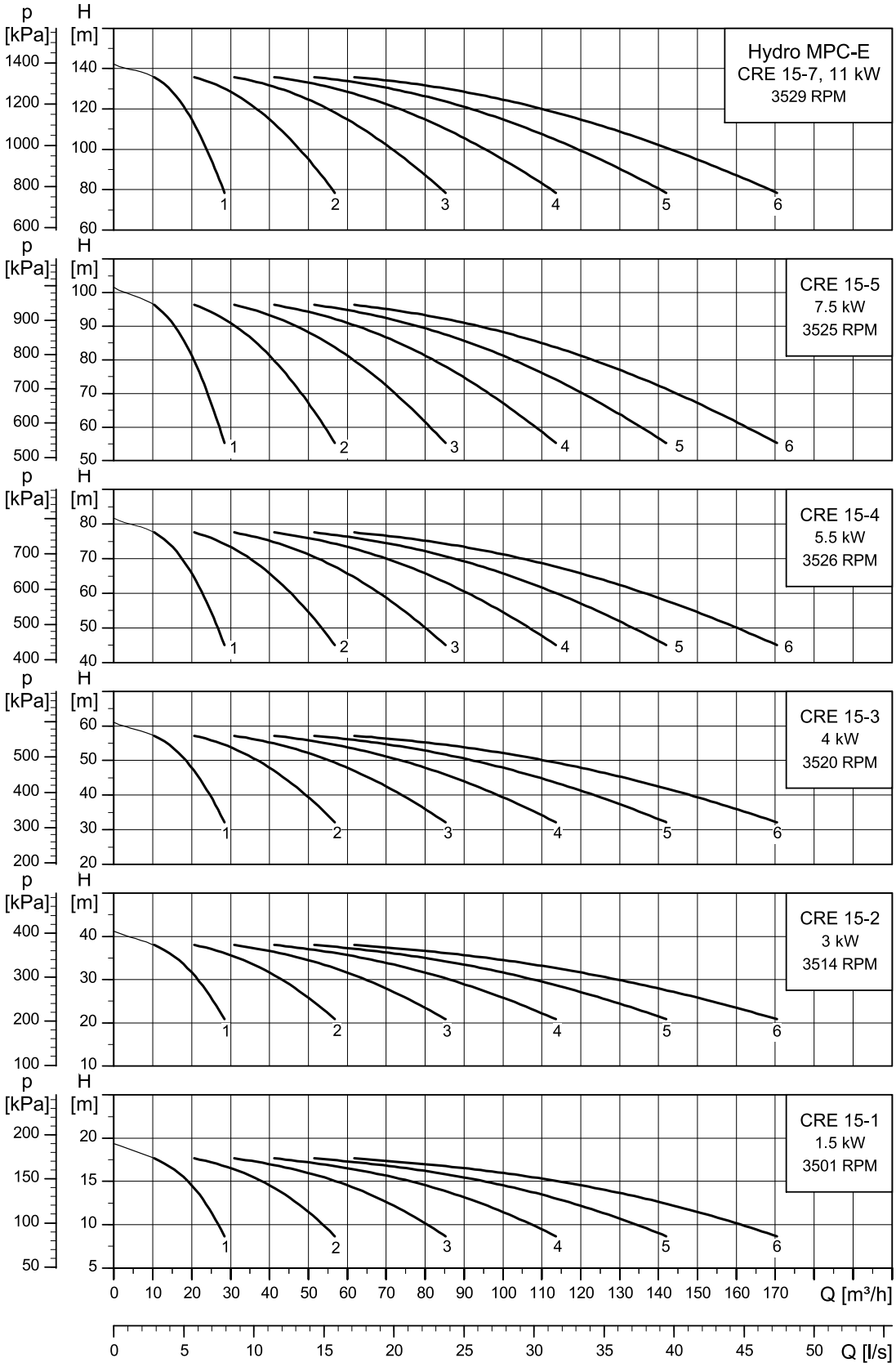

Losses in fittings and valves are not included.

Hydro MPC-E with CRE 20

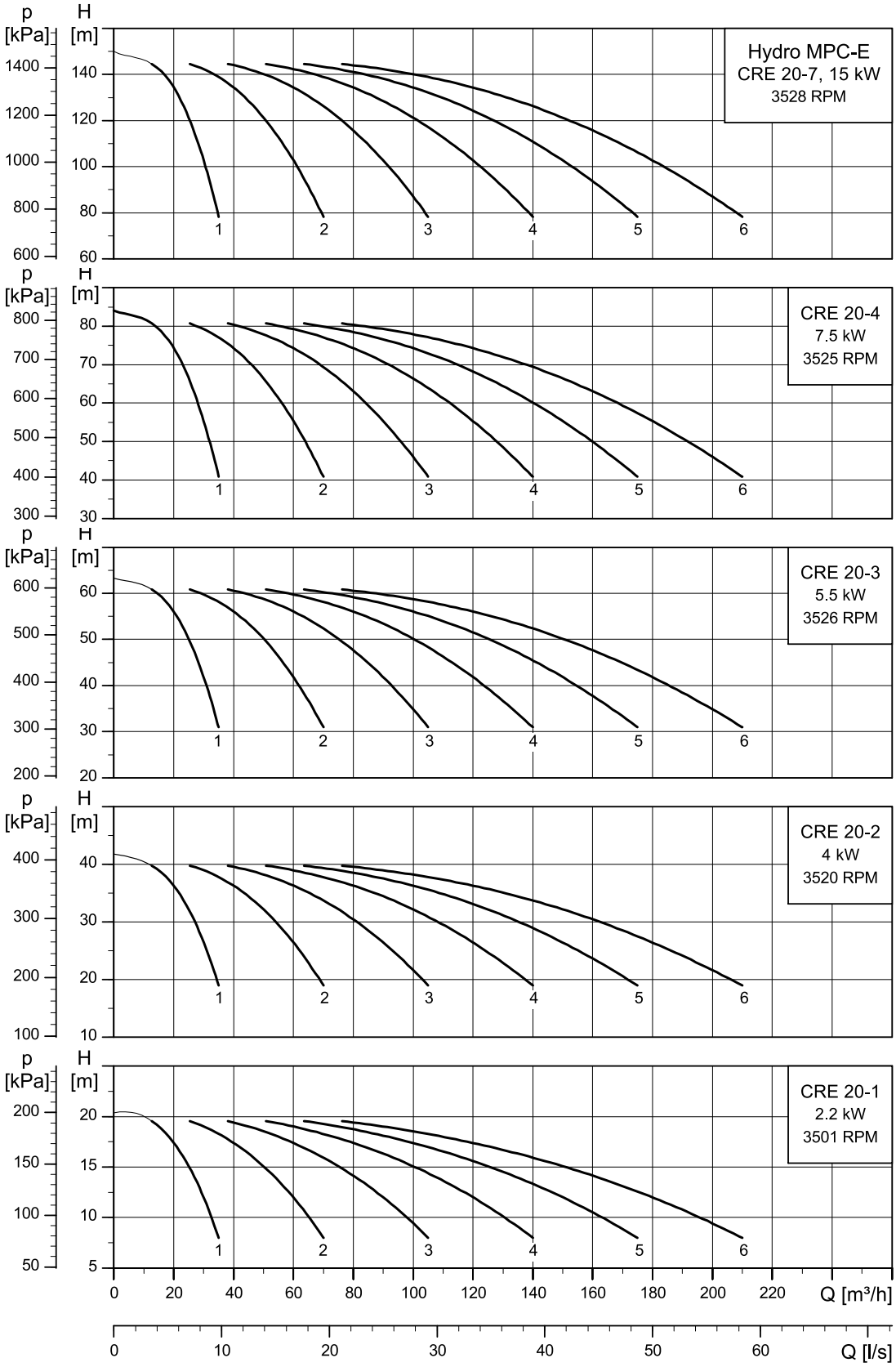

Losses in fittings and valves are not included.

Hydro MPC-E with CRE 32

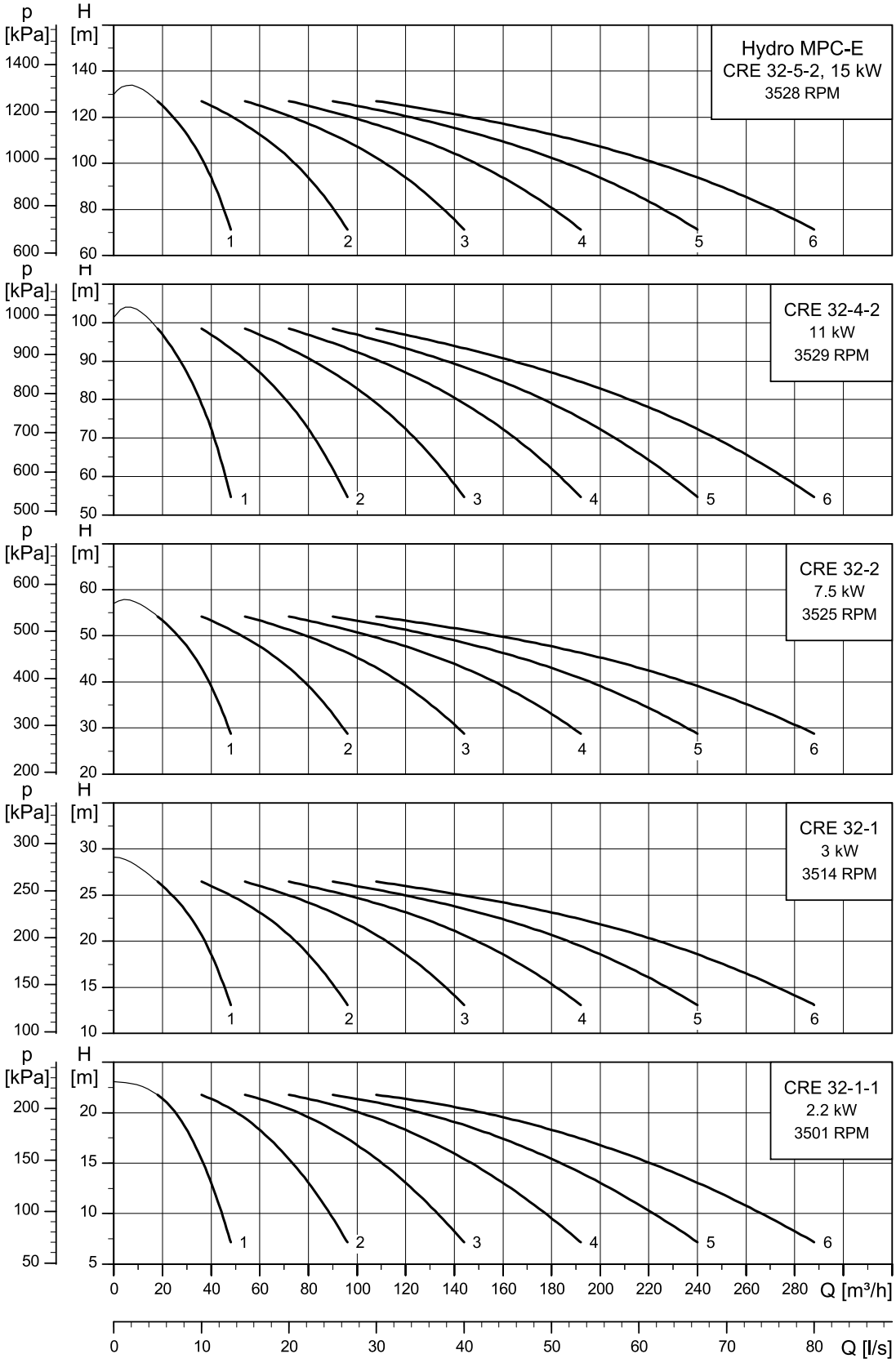

Losses in fittings and valves are not included.

Hydro MPC-E with CRE 45

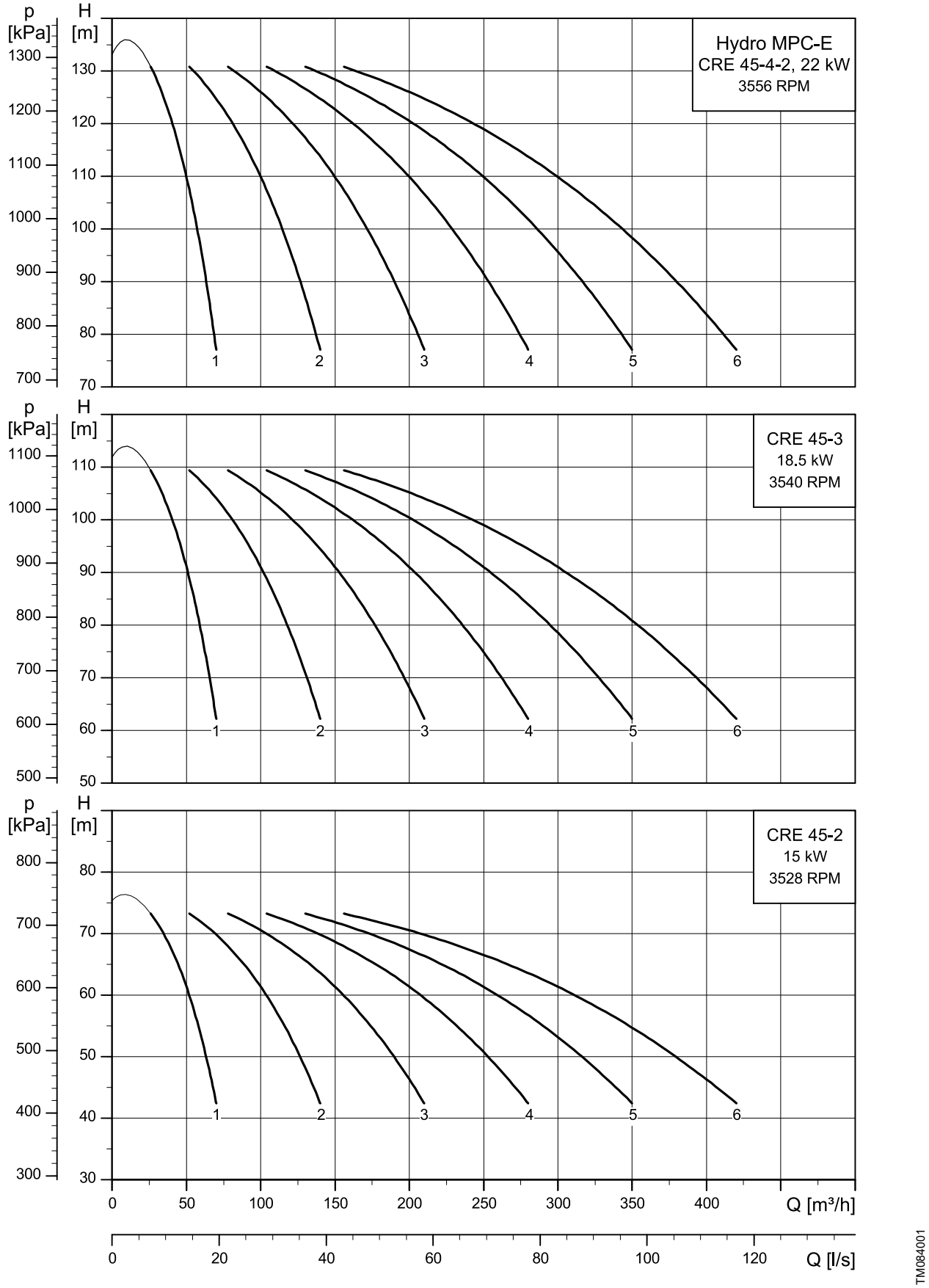

Losses in fittings and valves are not included.

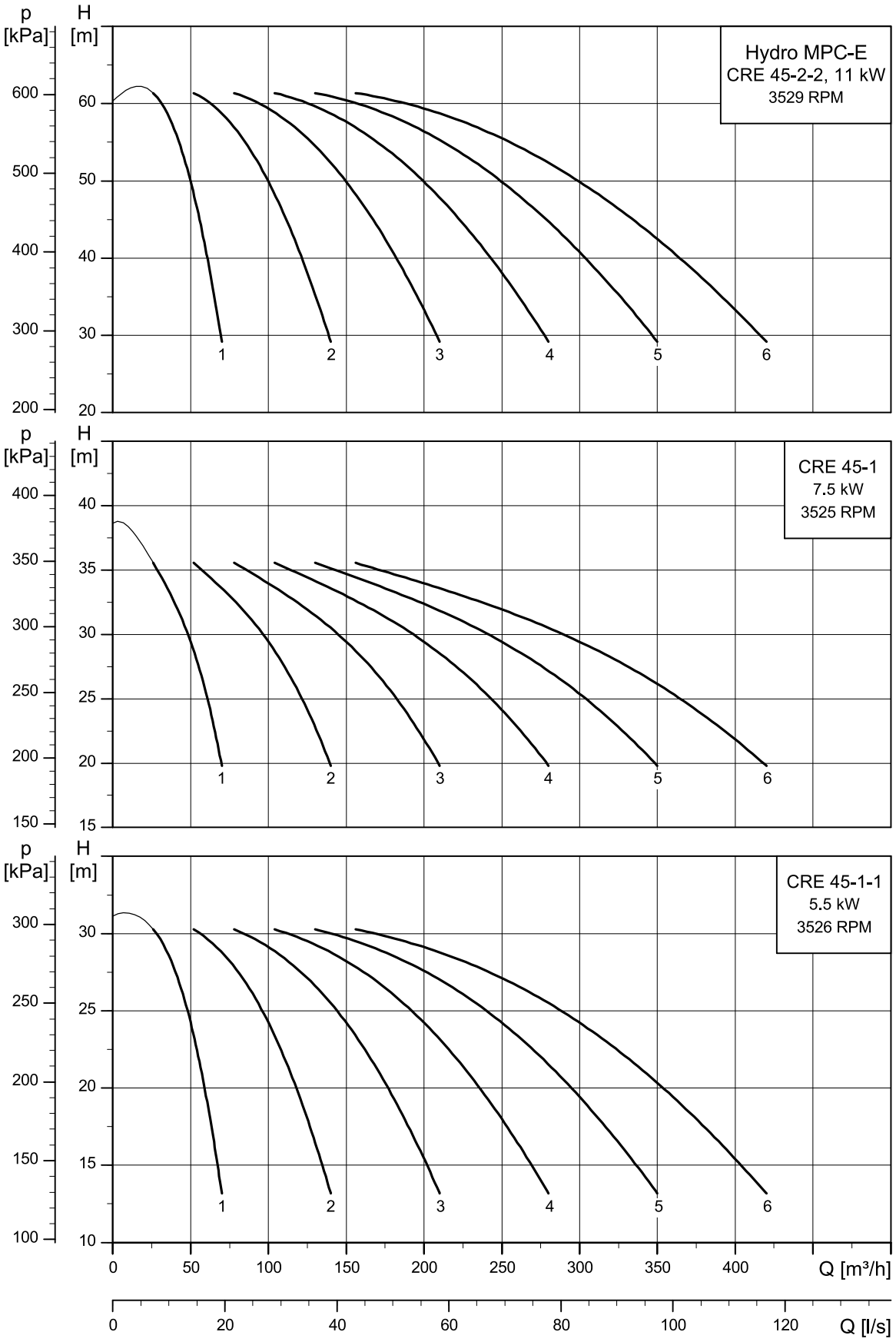

Losses in fittings and valves are not included.

Hydro MPC-E with CR, CRE 64

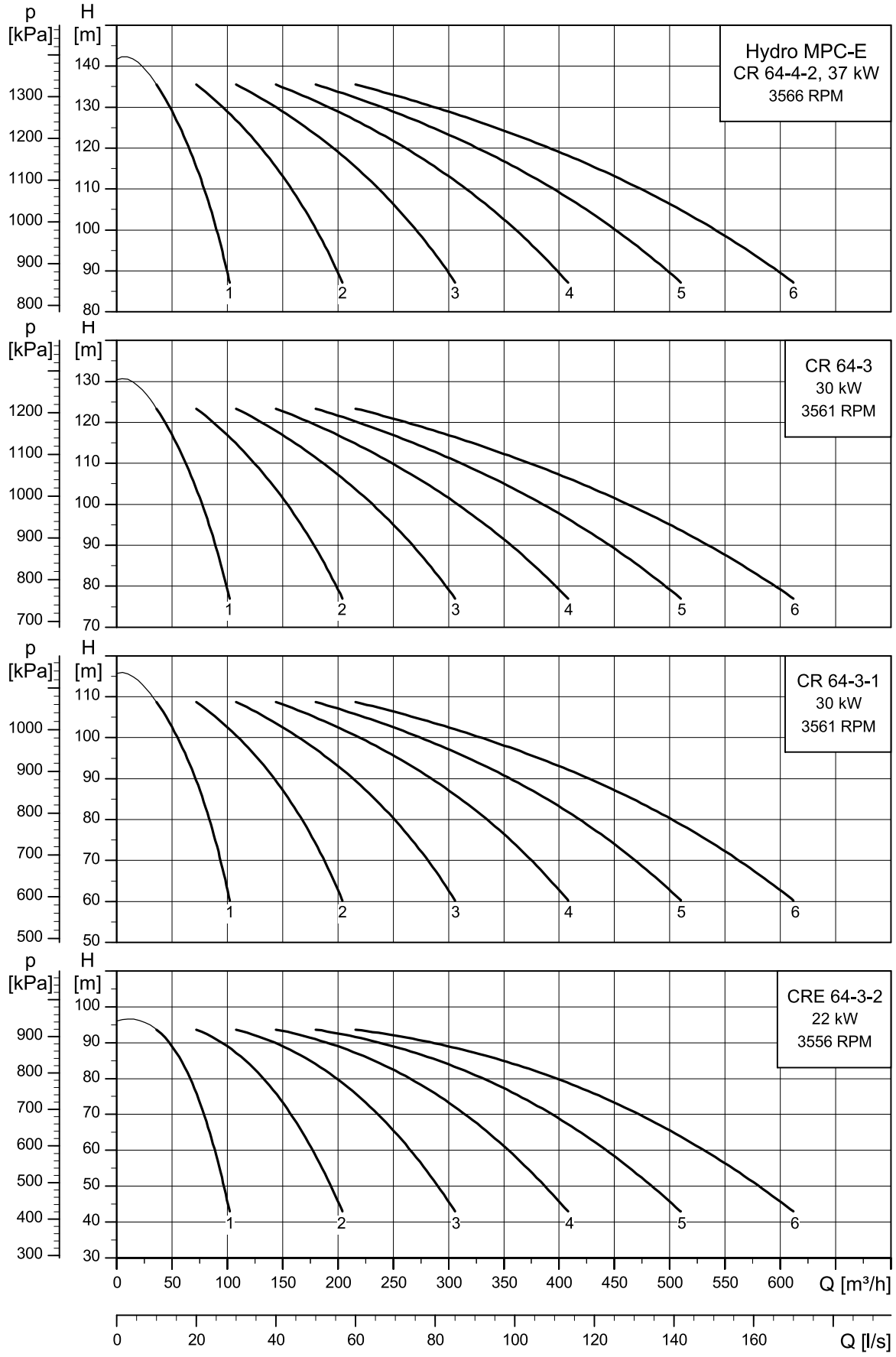

Losses in fittings and valves are not included.

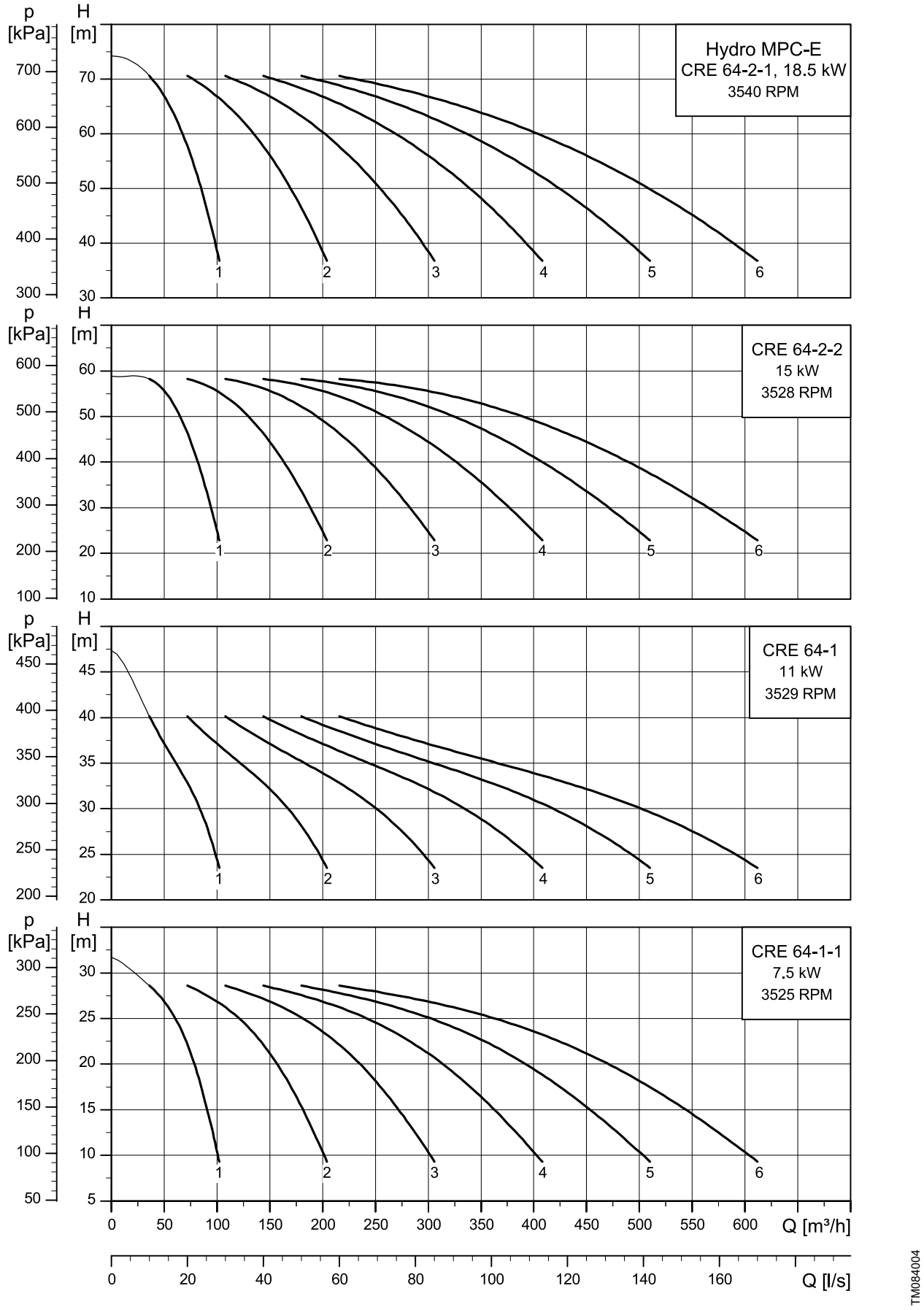

Losses in fittings and valves are not included.

Hydro MPC-E with CR, CRE 95

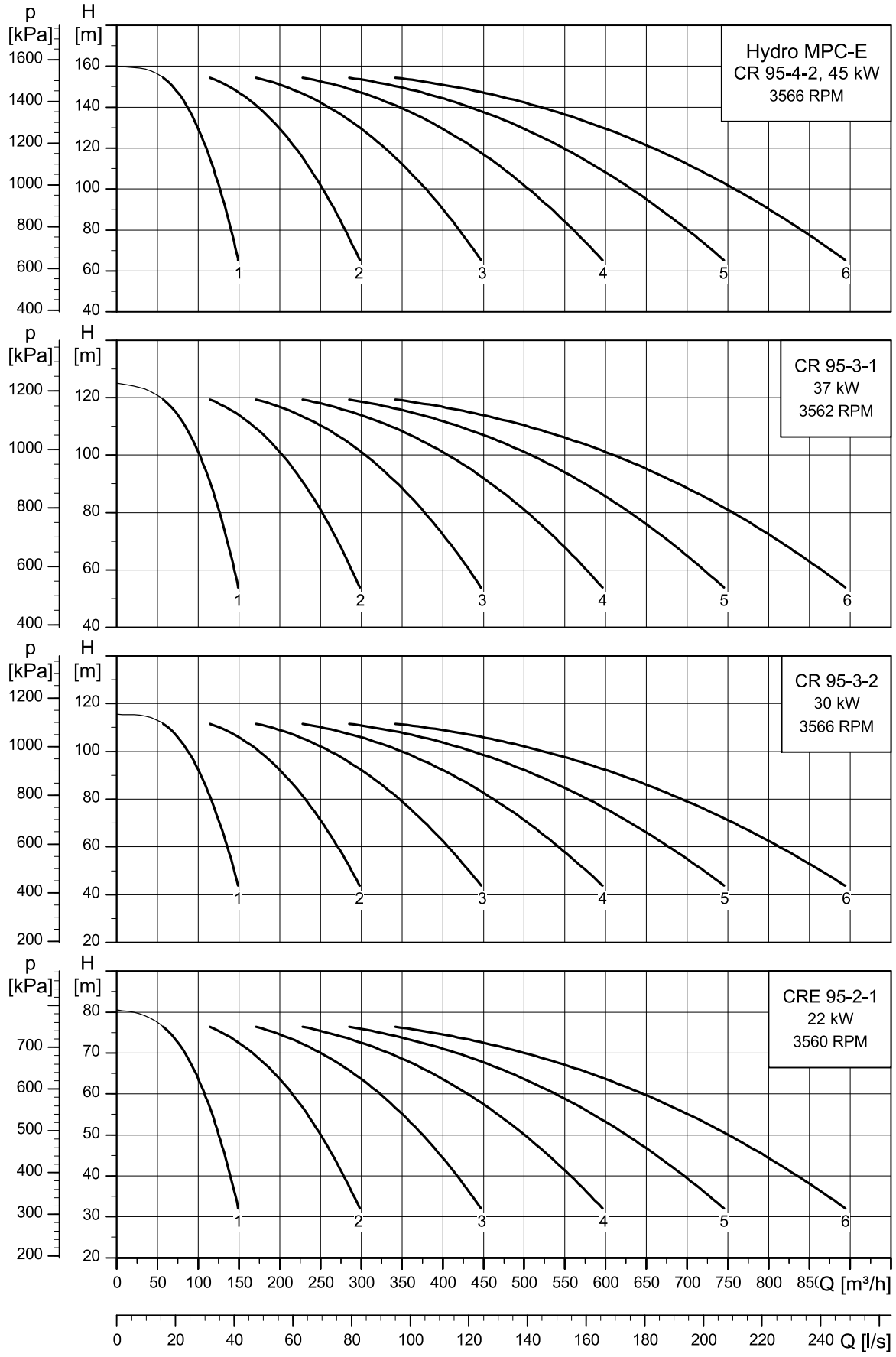

Losses in fittings and valves are not included.

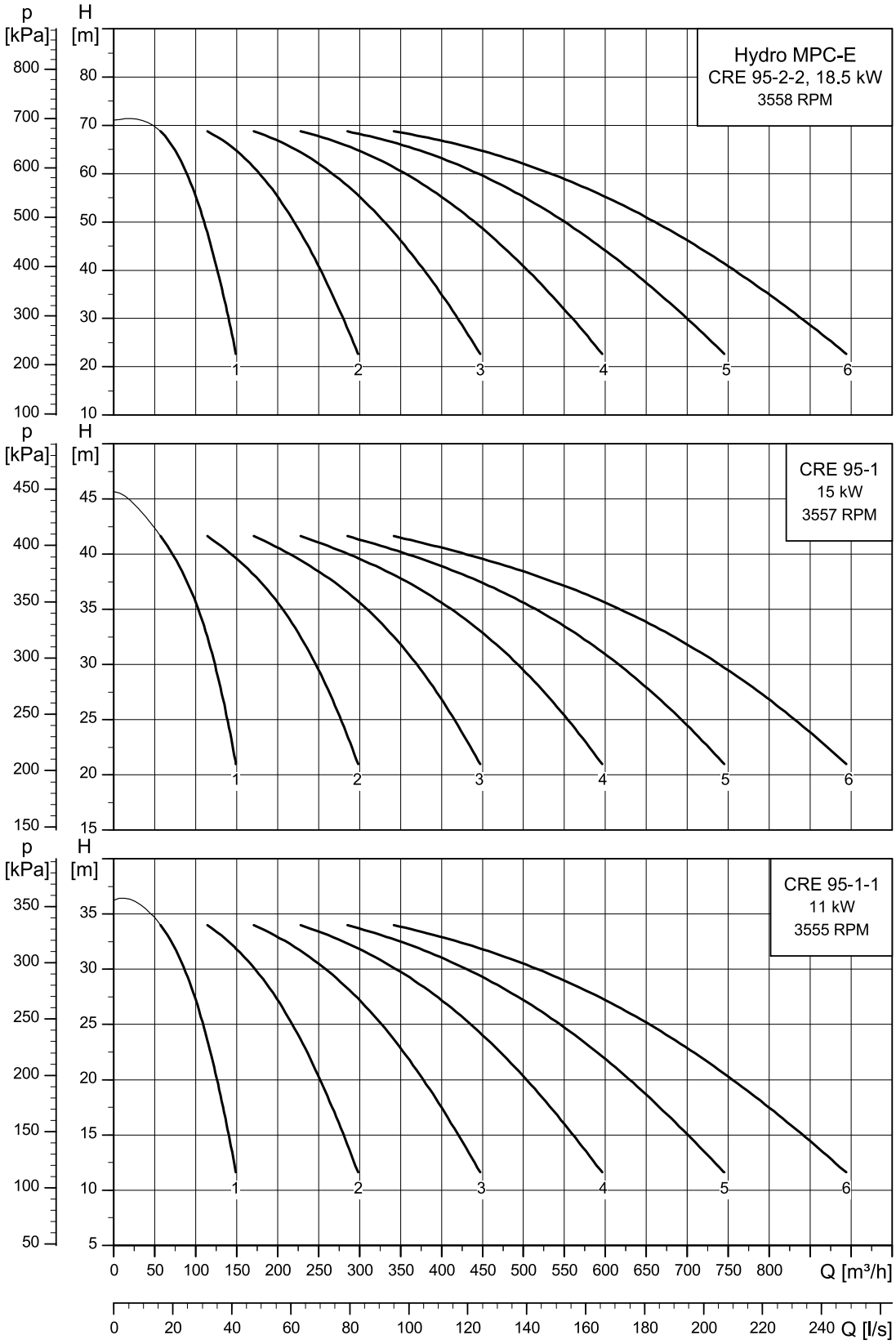

Losses in fittings and valves are not included.

Hydro MPC-E with CR, CRE 125

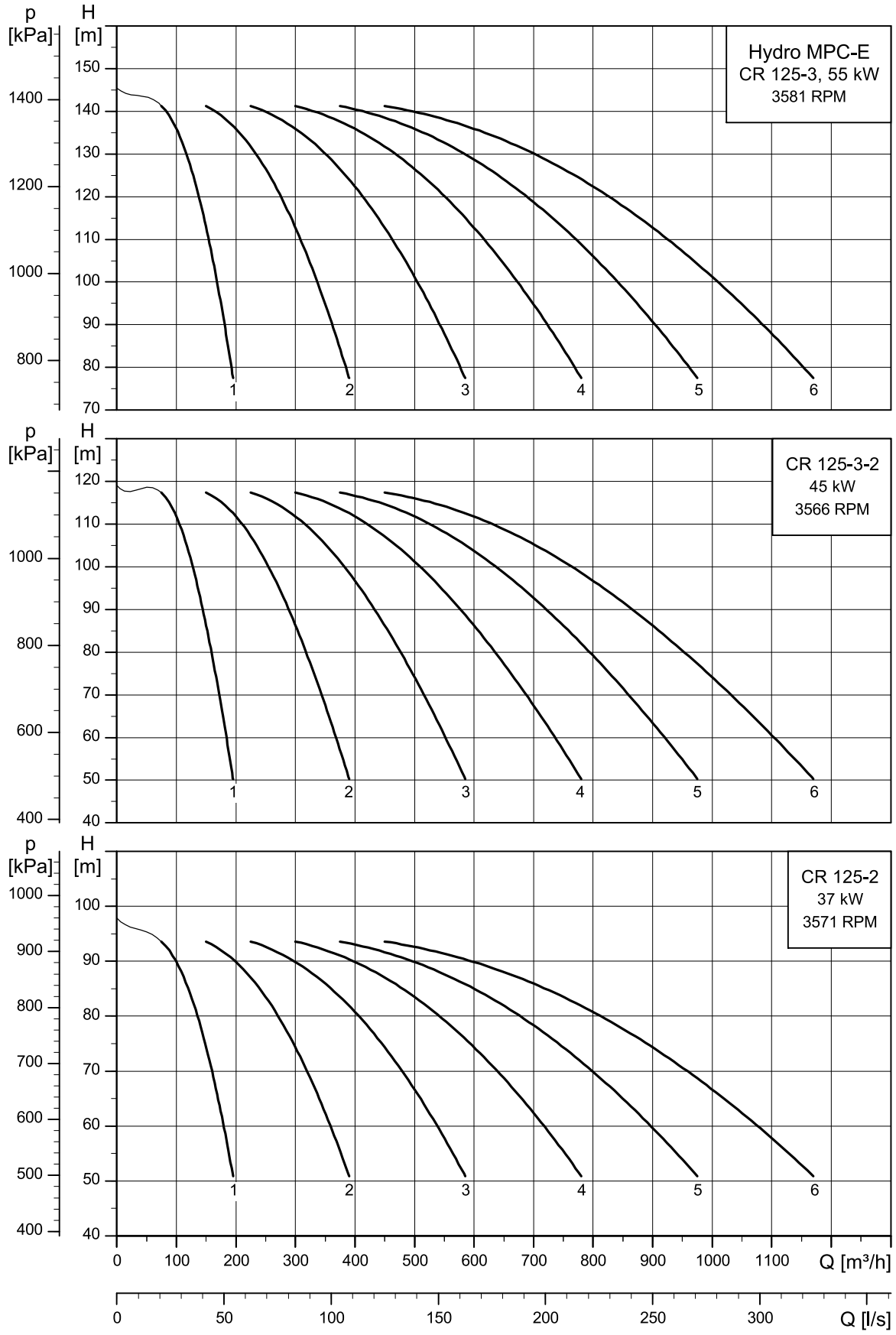

Losses in fittings and valves are not included.

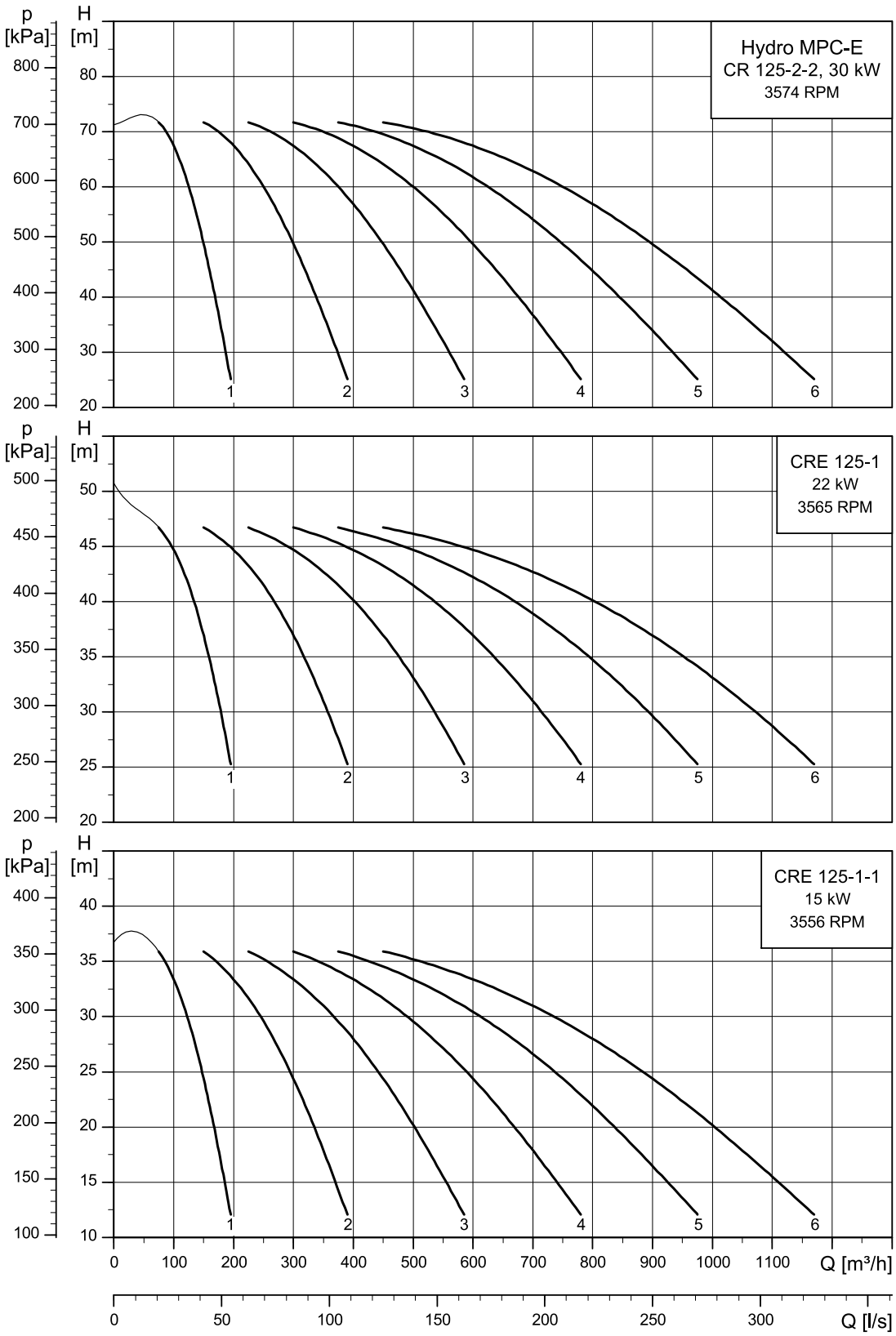

Losses in fittings and valves are not included.

Hydro MPC-E with CR, CRE 155

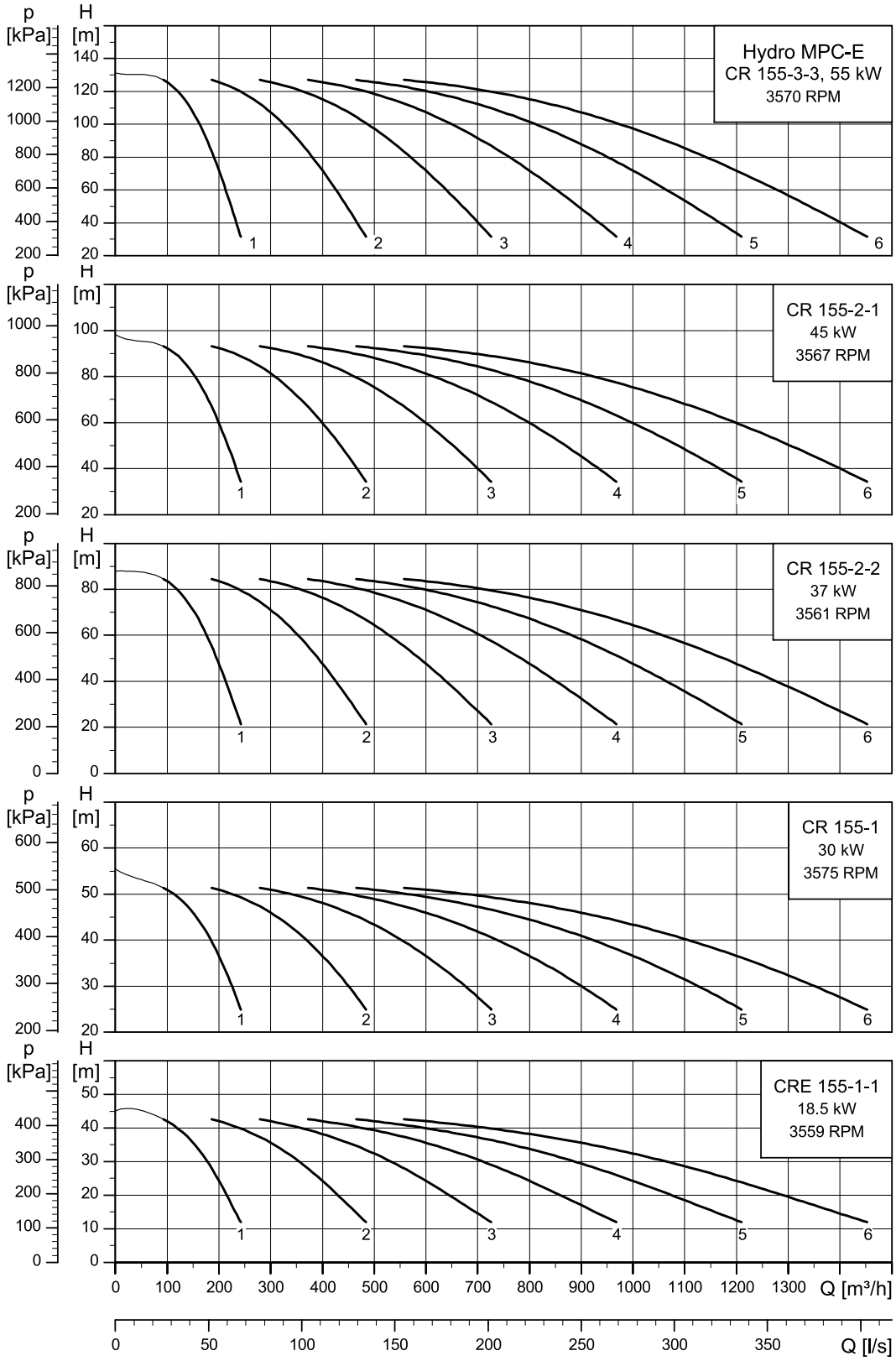

Losses in fittings and valves are not included.

9. Technical data, Hydro MPC-E, 50/60 Hz

Hydro MPC-E with CRE 3

Below is the dimensional sketch of a system in different designs. The system is shown as an example. The pumps supplied may differ from the sketch.

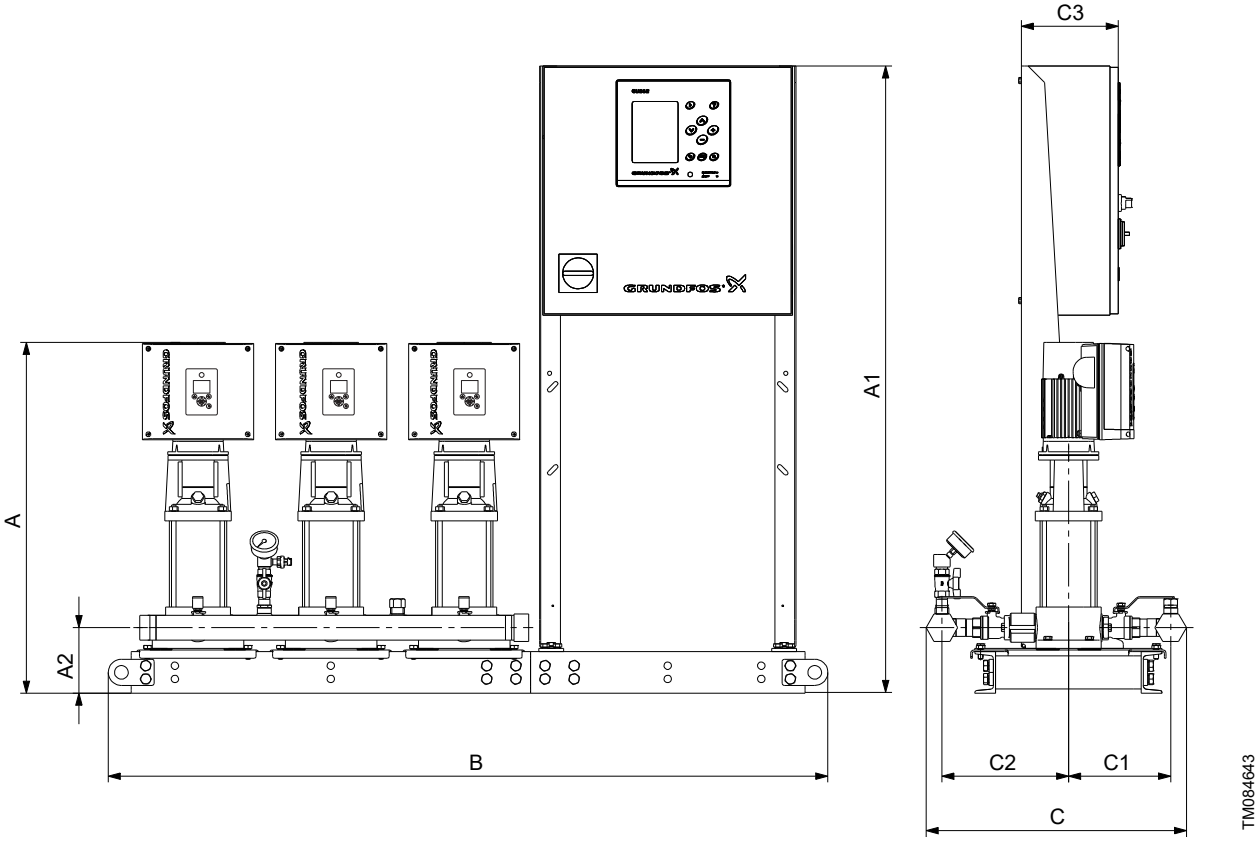

Design E

Electrical data, dimensions and weights

Hydro MPC-E with CRE 3

Number of pumps	Pump type	Voltage code	Motor [kW]	Max. I_N at 400 V [A]	Connections	Rated speed	A [mm]	A1 [mm]	A2 [mm]	B [mm]	B1 [mm]	C [mm]	C1 [mm]	C2 [mm]	C3 [mm]	Net weight [kg]	Design
2	CRE 3-2	U2	0.37	2.08	R 2	3447	614	1510	156	1210	-	624	245	303	300	175	E
	CRE 3-4	U2	0.55	2.68	R 2	3447	632	1510	156	1210	-	624	245	303	300	177	E
	CRE 3-5	U2	0.75	3.36	R 2	3474	656	1510	156	1210	-	624	245	303	300	179	E
	CRE 3-8	U2	1.1	4.3	R 2	3463	710	1510	156	1210	-	624	245	303	300	185	E
	CRE 3-11	U2	1.5	5.64	R 2	3501	800	1510	156	1210	-	624	245	303	300	193	E
	CRE 3-15	U2	2.2	8.06	R 2	3501	872	1510	156	1210	-	624	245	303	300	200	E
3	CRE 3-2	U2	0.37	3.12	R 2	3447	614	1510	156	1530	-	624	245	303	300	213	E
	CRE 3-4	U2	0.55	4.02	R 2	3447	632	1510	156	1530	-	624	245	303	300	215	E
	CRE 3-5	U2	0.75	5.04	R 2	3474	656	1510	156	1530	-	624	245	303	300	219	E
	CRE 3-8	U2	1.1	6.45	R 2	3463	710	1510	156	1530	-	624	245	303	300	228	E
	CRE 3-11	U2	1.5	8.46	R 2	3501	800	1510	156	1530	-	624	245	303	300	240	E
	CRE 3-15	U2	2.2	12.09	R 2	3501	872	1510	156	1530	-	624	245	303	300	281	E
4	CRE 3-2	U2	0.37	4.16	R 2 1/2	3447	614	1510	156	1850	-	639	245	303	300	260	E
	CRE 3-4	U2	0.55	5.36	R 2 1/2	3447	632	1510	156	1850	-	639	245	303	300	262	E
	CRE 3-5	U2	0.75	6.72	R 2 1/2	3474	656	1510	156	1850	-	639	245	303	300	267	E
	CRE 3-8	U2	1.1	8.6	R 2 1/2	3463	710	1510	156	1850	-	639	245	303	300	279	E
	CRE 3-11	U2	1.5	11.28	R 2 1/2	3501	800	1510	156	2050	-	639	245	303	300	330	E
	CRE 3-15	U2	2.2	16.12	R 2 1/2	3501	872	1510	156	2050	-	639	245	303	300	343	E

Voltage code, U2: 3 x 380-415 V ± 10 %, PE.

Design E: APAC design. Systems with the control cabinet mounted on the same base frame as the pumps.

All pumps are fitted with three-phase motors.

Dimensions may vary by ± 10 mm.

Hydro MPC-E with CRE 5

Below is the dimensional sketch of a system in different designs. The system is shown as an example. The pumps supplied may differ from the sketch.

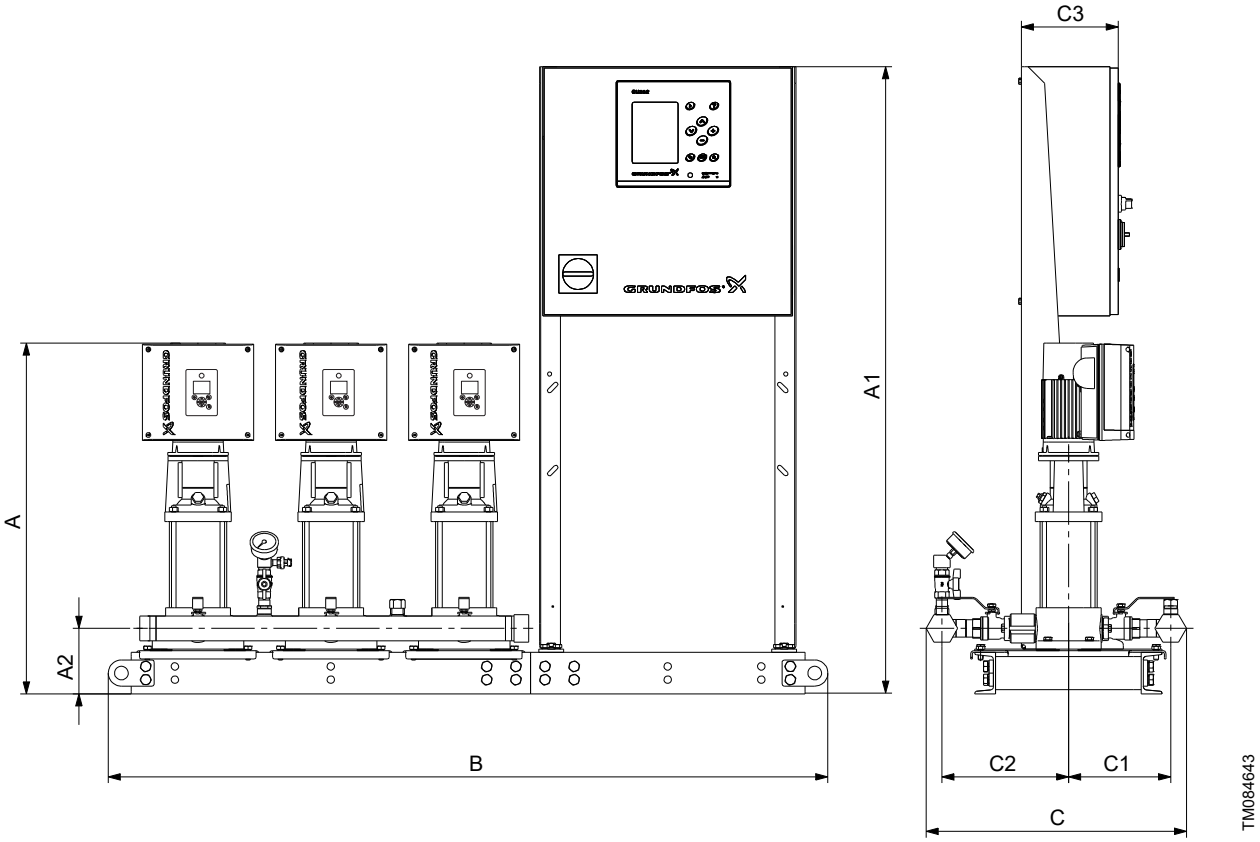

Design E

Electrical data, dimensions and weights

Hydro MPC-E with CRE 5

Number of pumps	Pump type	Voltage code	Motor [kW]	Max. I_N at 400 V [A]	Connections	Rated speed	A [mm]	A1 [mm]	A2 [mm]	B [mm]	B1 [mm]	C [mm]	C1 [mm]	C2 [mm]	C3 [mm]	Net weight [kg]	Design
2	CRE 5-2	U2	0.55	2.68	R 2	3447	614	1510	156	1210	-	624	245	303	300	176	E
	CRE 5-4	U2	1.1	4.3	R 2	3463	674	1510	156	1210	-	624	245	303	300	183	E
	CRE 5-5	U2	1.5	5.64	R 2	3501	737	1510	156	1210	-	624	245	303	300	190	E
	CRE 5-9	U2	2.2	8.06	R 2	3501	845	1510	156	1210	-	624	245	303	300	198	E
	CRE 5-12	U2	3	11.26	R 2	3514	990	1510	156	1210	-	624	245	303	300	218	E
	CRE 5-14	U2	4	14.74	R 2	3520	1044	1510	156	1210	-	624	245	303	300	262	E
3	CRE 5-2	U2	0.55	4.02	R 2	3447	614	1510	156	1530	-	624	245	303	300	213	E
	CRE 5-4	U2	1.1	6.45	R 2	3463	674	1510	156	1530	-	624	245	303	300	225	E
	CRE 5-5	U2	1.5	8.46	R 2	3501	737	1510	156	1530	-	624	245	303	300	235	E
	CRE 5-9	U2	2.2	12.09	R 2	3501	845	1510	156	1530	-	624	245	303	300	278	E
	CRE 5-12	U2	3	16.89	R 2	3514	990	1510	156	1530	-	624	245	303	300	309	E
	CRE 5-14	U2	4	22.11	R 2	3520	1044	1510	156	1530	-	624	245	303	300	327	E
4	CRE 5-2	U2	0.55	5.36	R 2 1/2	3447	614	1510	156	1850	-	639	245	303	300	260	E
	CRE 5-4	U2	1.1	8.6	R 2 1/2	3463	674	1510	156	1850	-	639	245	303	300	275	E
	CRE 5-5	U2	1.5	11.28	R 2 1/2	3501	737	1510	156	2050	-	639	245	303	300	324	E
	CRE 5-9	U2	2.2	16.12	R 2 1/2	3501	845	1510	156	2050	-	639	245	303	300	339	E
	CRE 5-12	U2	3	22.52	R 2 1/2	3514	990	1510	156	2050	-	639	245	303	300	405	E
	CRE 5-14	U2	4	29.48	R 2 1/2	3520	1044	1510	156	2050	-	639	245	303	300	483	E

Voltage code, U2: 3 x 380-415 V ± 10 %, PE.

Design E: APAC design. Systems with the control cabinet mounted on the same base frame as the pumps.

All pumps are fitted with three-phase motors.

Dimensions may vary by ± 10 mm.

Hydro MPC-E with CRE 10

Below is the dimensional sketch of a system in different designs. The system is shown as an example. The pumps supplied may differ from the sketch.

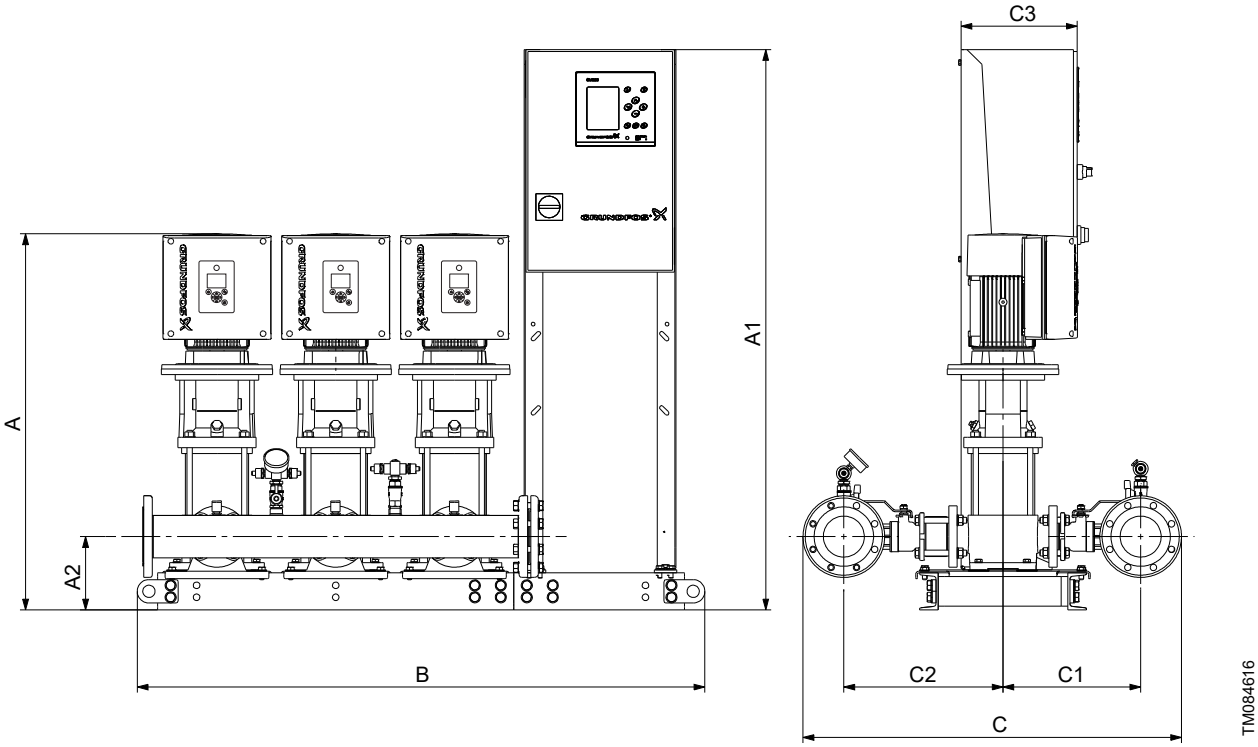

Design E

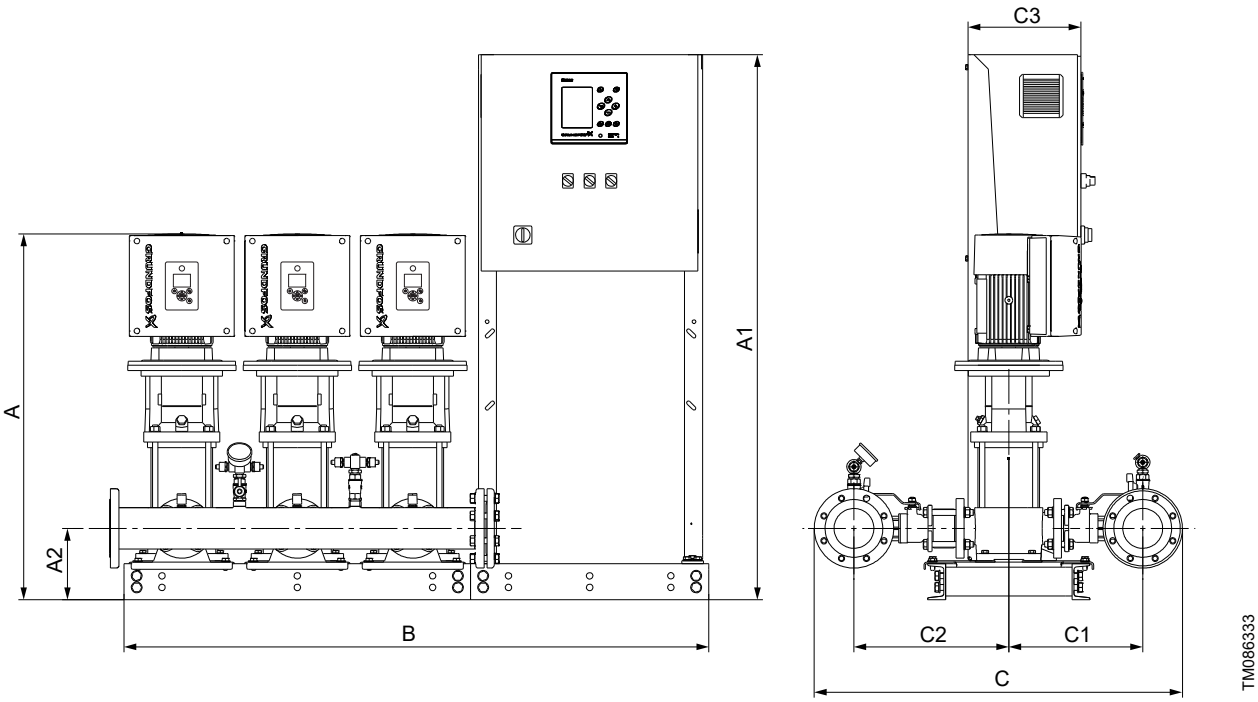

Design H

Electrical data, dimensions and weights

Hydro MPC-E with CRE 10

Number of pumps	Pump type	Voltage code	Motor [kW]	Max. I_N at 400 V [A]	Connections	Rated speed	A [mm]	A1 [mm]	A2 [mm]	B [mm]	B1 [mm]	C [mm]	C1 [mm]	C2 [mm]	C3 [mm]	Net weight [kg]	Design
2	CRE 10-1	U2	0.75	3.36	R 2 1/2	3474	707	1510	186	1210	-	751	302	360	300	208	E
	CRE 10-2	U2	1.5	5.64	R 2 1/2	3501	743	1510	186	1210	-	751	302	360	300	218	E
	CRE 10-3	U2	2.2	8.06	R 2 1/2	3501	773	1510	186	1210	-	751	302	360	300	224	E
	CRE 10-5	U2	3	11.26	R 2 1/2	3514	898	1510	186	1210	-	751	302	360	300	244	E
	CRE 10-6	U2	4	14.74	R 2 1/2	3514	928	1510	186	1210	-	751	302	360	300	288	E
	CRE 10-9	U2	5.5	19.9	R 2 1/2	3526	1081	1510	186	1210	-	751	302	360	300	360	E
3	CRE 10-1	U2	0.75	5.04	DN 80	3474	707	1510	186	1530	-	860	302	360	300	274	E
	CRE 10-2	U2	1.5	8.46	DN 80	3501	743	1510	186	1530	-	860	302	360	300	289	E
	CRE 10-3	U2	2.2	12.09	DN 80	3501	773	1510	186	1530	-	860	302	360	300	329	E
	CRE 10-5	U2	3	16.89	DN 80	3514	898	1510	186	1530	-	860	302	360	300	359	E
	CRE 10-6	U2	4	22.11	DN 80	3514	928	1510	186	1530	-	860	302	360	300	377	E
	CRE 10-9	U2	5.5	29.85	DN 80	3526	1081	1510	186	1530	-	860	302	360	300	527	E
4	CRE 10-1	U2	0.75	6.72	DN 80	3474	707	1510	186	1850	-	860	302	360	300	335	E
	CRE 10-2	U2	1.5	11.28	DN 80	3501	743	1510	186	2050	-	860	302	360	300	390	E
	CRE 10-3	U2	2.2	16.12	DN 80	3501	773	1510	186	2050	-	860	302	360	300	402	E
	CRE 10-5	U2	3	22.52	DN 80	3514	898	1510	186	2050	-	860	302	360	300	467	E
	CRE 10-6	U2	4	29.48	DN 80	3514	928	1510	186	2050	-	860	302	360	300	544	E
	CRE 10-9	U2	5.5	39.8	DN 80	3526	1081	1510	186	2050	-	860	302	360	300	640	E
5	CRE 10-1	U2	0.75	8.4	DN 100	3474	707	1510	186	1710	770	880	302	360	300	420	H
	CRE 10-2	U2	1.5	14.1	DN 100	3501	743	1510	186	1710	770	880	302	360	300	476	H
	CRE 10-3	U2	2.2	20.15	DN 100	3501	773	1510	186	1710	770	880	302	360	300	515	H
	CRE 10-5	U2	3	28.15	DN 100	3514	898	1510	186	1710	770	880	302	360	300	547	H
	CRE 10-6	U2	4	36.85	DN 100	3514	928	1510	186	1710	770	880	302	360	300	649	H
	CRE 10-9	U2	5.5	49.75	DN 100	3526	1081	1510	186	1710	770	880	302	360	300	660	H
6	CRE 10-1	U2	0.75	10.08	DN 100	3474	707	1510	186	2030	770	880	302	360	300	467	H
	CRE 10-2	U2	1.5	16.92	DN 100	3501	743	1510	186	2030	770	880	302	360	300	553	H
	CRE 10-3	U2	2.2	24.18	DN 100	3501	773	1510	186	2030	770	880	302	360	300	553	H
	CRE 10-5	U2	3	33.78	DN 100	3514	898	1510	186	2030	770	880	302	360	300	685	H
	CRE 10-6	U2	4	44.22	DN 100	3514	928	1510	186	2030	770	880	302	360	300	612	H
	CRE 10-9	U2	5.5	59.7	DN 100	3526	1081	1510	186	2030	970	880	302	360	300	760	H

Voltage code, U2: 3 x 380-415 V ± 10 %, PE.

Design E: APAC design. Systems with the control cabinet mounted on the same base frame as the pumps.

Design H: APAC design. Systems with the control cabinet mounted on its own base frame. The control cabinet can be placed up to 2 metres from the pumps.

All pumps are fitted with three-phase motors.

Dimensions may vary by ± 10 mm.

Hydro MPC-E with CRE 15

Below is the dimensional sketch of a system in different designs. The system is shown as an example. The pumps supplied may differ from the sketch.

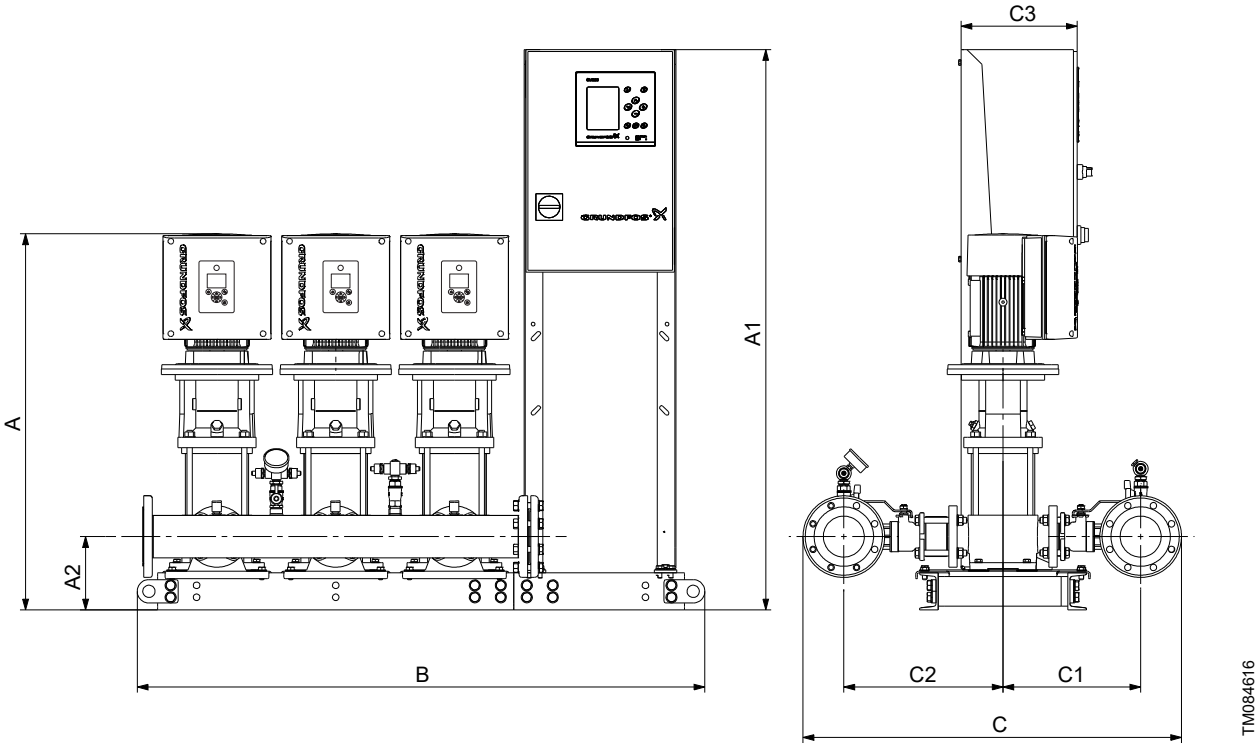

Design E

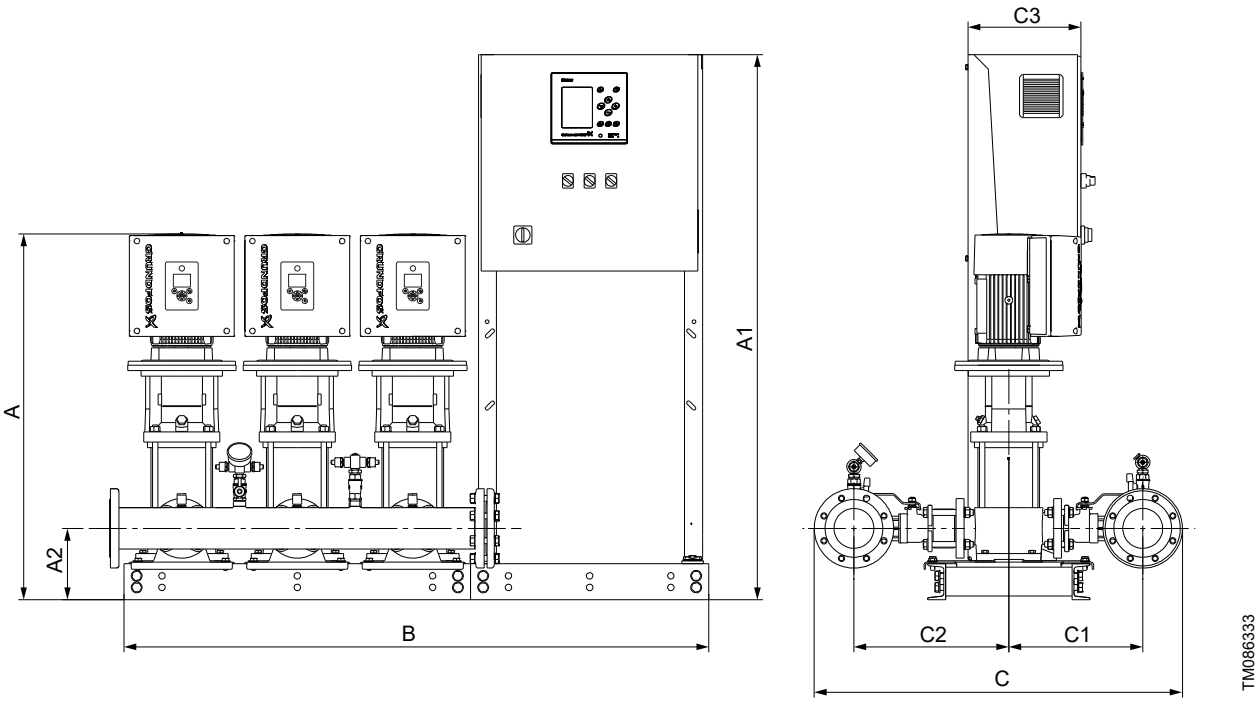

Design H

Electrical data, dimensions and weights

Hydro MPC-E with CRE 15

Number of pumps	Pump type	Voltage code	Motor [kW]	Max. I_N at 400 V [A]	Connections	Rated speed	A [mm]	A1 [mm]	A2 [mm]	B [mm]	B1 [mm]	C [mm]	C1 [mm]	C2 [mm]	C3 [mm]	Net weight [kg]	Design
2	CRE 15-1	U2	1.5	5.64	DN 80	3501	795	1510	196	1210	-	1024	383	441	300	248	E
	CRE 15-2	U2	3	11.26	DN 80	3514	860	1510	196	1210	-	1024	383	441	300	264	E
	CRE 15-3	U2	4	14.74	DN 80	3520	905	1510	196	1210	-	1024	383	441	300	313	E
	CRE 15-4	U2	5.5	19.9	DN 80	3526	1013	1510	196	1210	-	1024	383	441	300	381	E
	CRE 15-5	U2	7.5	27.24	DN 80	3525	1082	1510	196	1570	-	1024	383	441	300	392	E
	CRE 15-7	U2	11	39.16	DN 80	3529	1266	1510	196	1770	-	1024	383	441	300	517	E
3	CRE 15-1	U2	1.5	8.46	DN 100	3501	795	1510	196	1530	-	1044	383	441	300	328	E
	CRE 15-2	U2	3	16.89	DN 100	3514	860	1510	196	1530	-	1044	383	441	300	383	E
	CRE 15-3	U2	4	22.11	DN 100	3520	905	1510	196	1530	-	1044	383	441	300	410	E
	CRE 15-4	U2	5.5	29.85	DN 100	3526	1013	1510	196	1530	-	1044	383	441	300	554	E
	CRE 15-5	U2	7.5	40.86	DN 100	3525	1082	1510	196	1610	770	1044	383	441	300	607	H
	CRE 15-7	U2	11	58.74	DN 100	3529	1266	1510	196	1610	770	1044	383	441	300	572	H
4	CRE 15-1	U2	1.5	11.28	DN 100	3501	795	1510	196	2050	-	1044	383	441	300	438	E
	CRE 15-2	U2	3	22.52	DN 100	3514	860	1510	196	2050	-	1044	383	441	300	495	E
	CRE 15-3	U2	4	29.48	DN 100	3520	905	1510	196	2050	-	1044	383	441	300	584	E
	CRE 15-4	U2	5.5	39.8	DN 100	3526	1013	1510	196	2050	-	1044	383	441	300	672	E
	CRE 15-5	U2	7.5	54.48	DN 100	3525	1082	1510	196	2110	770	1044	383	441	300	632	H
	CRE 15-7	U2	11	78.32	DN 100	3529	1266	1510	196	2110	770	1044	383	441	300	729	H
5	CRE 15-1	U2	1.5	14.1	DN 150	3501	795	1510	196	1710	770	1109	383	441	300	536	H
	CRE 15-2	U2	3	28.15	DN 150	3514	860	1510	196	1710	770	1109	383	441	300	582	H
	CRE 15-3	U2	4	36.85	DN 150	3520	905	1510	196	1710	770	1109	383	441	300	699	H
	CRE 15-4	U2	5.5	49.75	DN 150	3526	1013	1510	196	1710	770	1109	383	441	300	700	H
	CRE 15-5	U2	7.5	68.1	DN 150	3525	1082	1510	196	2610	970	1109	383	441	300	805	H
	CRE 15-7	U2	11	97.9	DN 150	3529	1266	1510	196	2610	970	1109	383	441	300	926	H
6	CRE 15-1	U2	1.5	16.92	DN 150	3501	795	1510	196	2030	770	1109	383	441	300	631	H
	CRE 15-2	U2	3	33.78	DN 150	3514	860	1510	196	2030	770	1109	383	441	300	732	H
	CRE 15-3	U2	4	44.22	DN 150	3520	905	1510	196	2030	770	1109	383	441	300	677	H
	CRE 15-4	U2	5.5	59.7	DN 150	3526	1013	1510	196	2030	970	1109	383	441	300	814	H
	CRE 15-5	U2	7.5	81.72	DN 150	3525	1082	1510	196	3110	970	1109	383	441	300	932	H
	CRE 15-7	U2	11	117.48	DN 150	3529	1266	1510	196	3110	970	1109	383	441	300	1077	H

Voltage code, U2: 3 x 380-415 V ± 10 %, PE.

Design E: APAC design. Systems with the control cabinet mounted on the same base frame as the pumps.

Design H: APAC design. Systems with the control cabinet mounted on its own base frame. The control cabinet can be placed up to 2 metres from the pumps.

All pumps are fitted with three-phase motors.

Dimensions may vary by ± 10 mm.

Hydro MPC-E with CRE 20

Below is the dimensional sketch of a system in different designs. The system is shown as an example. The pumps supplied may differ from the sketch.

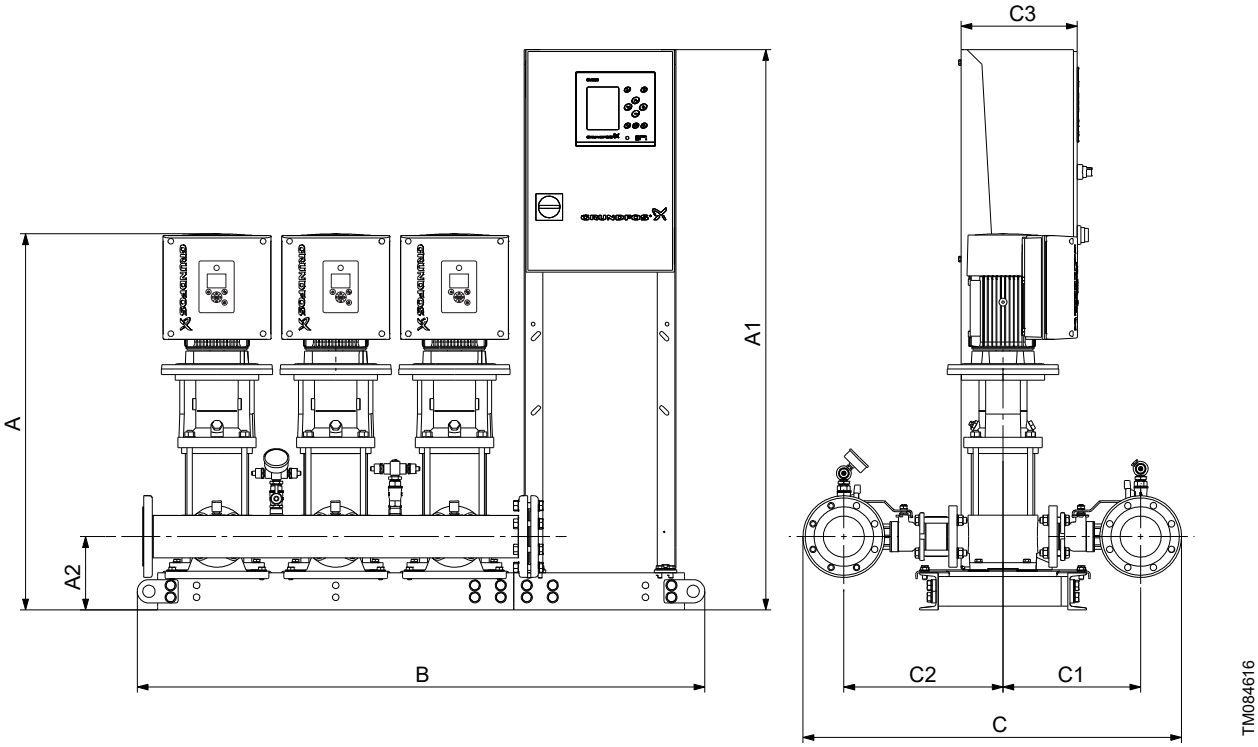

Design E

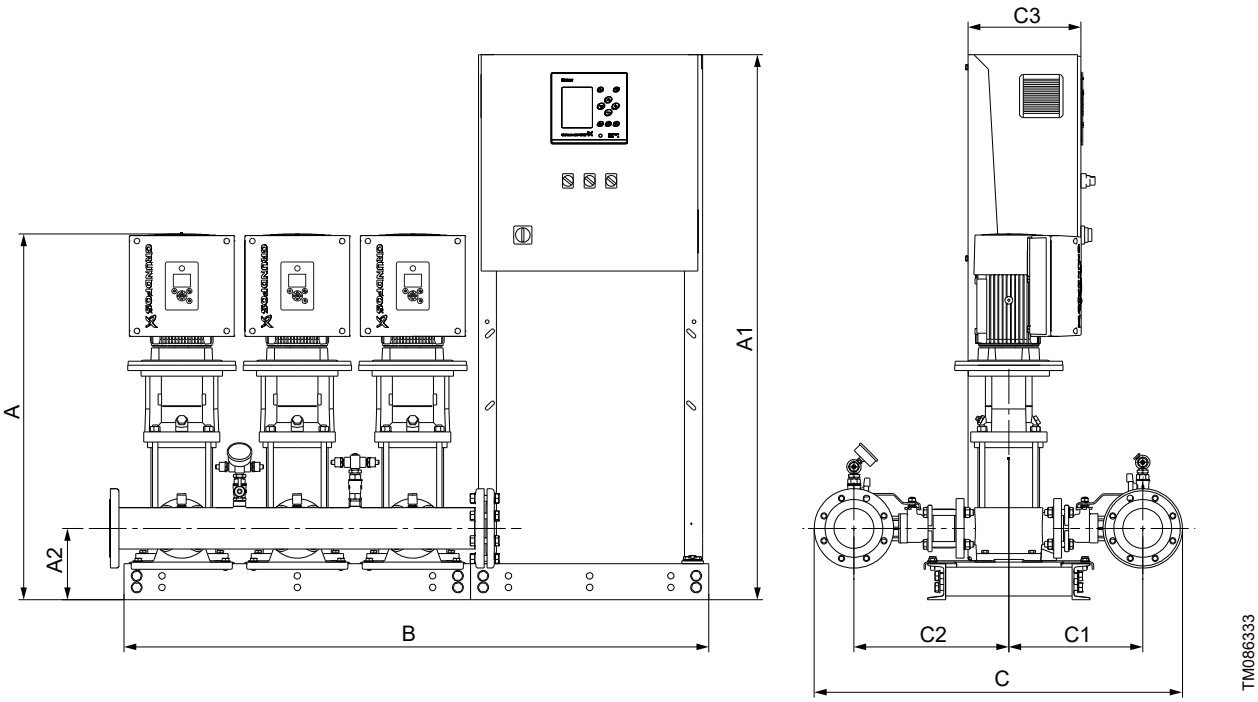

Design H

Electrical data, dimensions and weights

Hydro MPC-E with CRE 20

Number of pumps	Pump type	Voltage code	Motor [kW]	Max. I_N at 400 V [A]	Connections	Rated speed	A [mm]	A1 [mm]	A2 [mm]	B [mm]	B1 [mm]	C [mm]	C1 [mm]	C2 [mm]	C3 [mm]	Net weight [kg]	Design
2	CRE 20-1	U2	2.2	8.06	DN 80	3501	795	1510	196	1210	-	1024	383	441	300	252	E
	CRE 20-2	U2	4	14.74	DN 80	3520	860	1510	196	1210	-	1024	383	441	300	311	E
	CRE 20-3	U2	5.5	19.9	DN 80	3526	968	1510	196	1210	-	1024	383	441	300	377	E
	CRE 20-4	U2	7.5	27.24	DN 80	3525	1037	1510	196	1570	-	1024	383	441	300	392	E
	CRE 20-7	U2	15	51.52	DN 80	3528	1357	1510	196	1770	-	1024	383	441	300	517	E
3	CRE 20-1	U2	2.2	12.09	DN 100	3501	795	1510	196	1530	-	1044	383	441	300	365	E
	CRE 20-2	U2	4	22.11	DN 100	3520	860	1510	196	1530	-	1044	383	441	300	407	E
	CRE 20-3	U2	5.5	29.85	DN 100	3526	968	1510	196	1530	-	1044	383	441	300	548	E
	CRE 20-4	U2	7.5	40.86	DN 100	3525	1037	1510	196	1610	770	1044	383	441	300	607	H
	CRE 20-7	U2	15	77.28	DN 100	3528	1357	1510	196	1610	970	1044	383	441	300	720	H
4	CRE 20-1	U2	2.2	16.12	DN 100	3501	795	1510	196	2050	-	1044	383	441	300	446	E
	CRE 20-2	U2	4	29.48	DN 100	3520	860	1510	196	2050	-	1044	383	441	300	580	E
	CRE 20-3	U2	5.5	39.8	DN 100	3526	968	1510	196	2050	-	1044	383	441	300	664	E
	CRE 20-4	U2	7.5	54.48	DN 100	3525	1037	1510	196	2110	770	1044	383	441	300	632	H
	CRE 20-7	U2	15	103.04	DN 100	3528	1357	1510	196	2110	970	1044	383	441	300	913	H
5	CRE 20-1	U2	2.2	20.15	DN 150	3501	795	1510	196	1710	770	1109	383	441	300	570	H
	CRE 20-2	U2	4	36.85	DN 150	3520	860	1510	196	1710	770	1109	383	441	300	694	H
	CRE 20-3	U2	5.5	49.75	DN 150	3526	968	1510	196	1710	770	1109	383	441	300	690	H
	CRE 20-4	U2	7.5	68.1	DN 150	3525	1037	1510	196	2610	970	1109	383	441	300	805	H
	CRE 20-7	U2	15	128.8	DN 150	3528	1357	1510	196	2610	970	1109	383	441	300	1144	H
6	CRE 20-1	U2	2.2	24.18	DN 150	3501	795	1510	196	2030	770	1109	383	441	300	624	H
	CRE 20-2	U2	4	44.22	DN 150	3520	860	1510	196	2030	770	1109	383	441	300	671	H
	CRE 20-3	U2	5.5	59.7	DN 150	3526	968	1510	196	2030	970	1109	383	441	300	802	H
	CRE 20-4	U2	7.5	81.72	DN 150	3525	1037	1510	196	3110	970	1109	383	441	300	932	H
	CRE 20-7	U2	15	154.56	DN 150	3528	1357	1510	196	3110	970	1109	383	441	300	1331	H

Voltage code, U2: 3 x 380-415 V ± 10 %, PE.

Design E: APAC design. Systems with the control cabinet mounted on the same base frame as the pumps.

Design H: APAC design. Systems with the control cabinet mounted on its own base frame. The control cabinet can be placed up to 2 metres from the pumps.

All pumps are fitted with three-phase motors.

Dimensions may vary by ± 10 mm.

Hydro MPC-E with CRE 32

Below is the dimensional sketch of a system in different designs. The system is shown as an example. The pumps supplied may differ from the sketch.

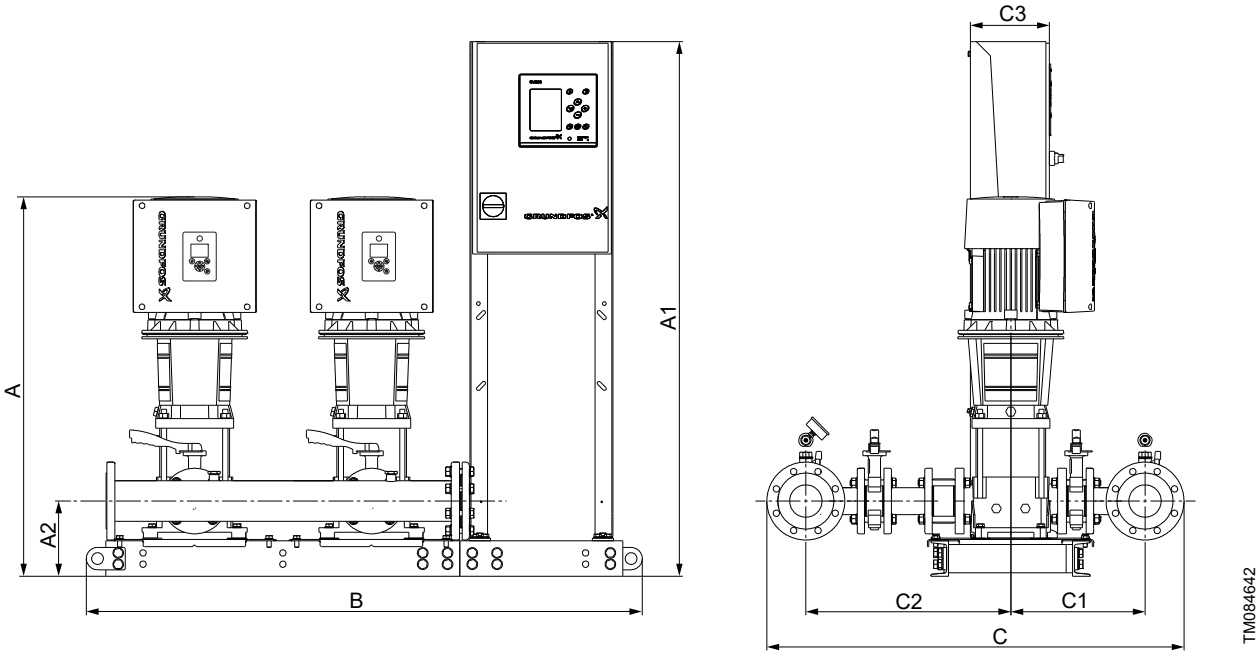

Design E

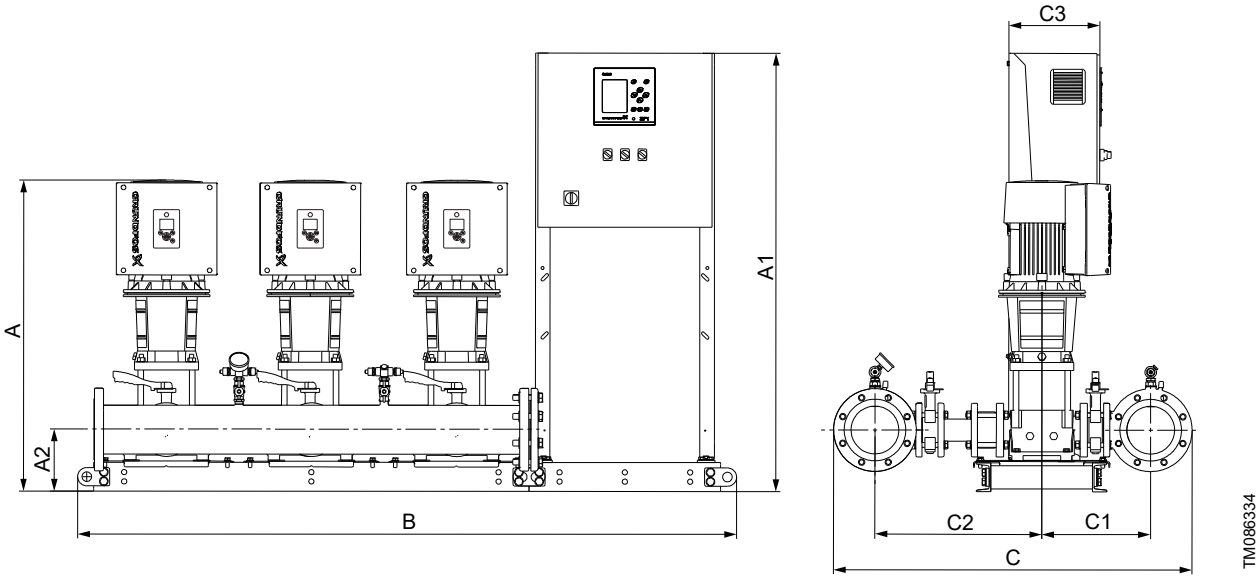

Design H

Electrical data, dimensions and weights

Hydro MPC-E with CRE 32

Number of pumps	Pump type	Voltage code	Motor [kW]	Max. I_N at 400 V [A]	Connections	Rated speed	A [mm]	A1 [mm]	A2 [mm]	B [mm]	B1 [mm]	C [mm]	C1 [mm]	C2 [mm]	C3 [mm]	Net weight [kg]	Design
2	CRE 32-1-1	U2	2.2	8.06	DN 100	3501	885	1510	211	1570	-	1180	379	579	300	321	E
	CRE 32-1	U2	3	11.26	DN 100	3514	945	1510	211	1570	-	1180	379	579	300	338	E
	CRE 32-2	U2	7.5	27.24	DN 100	3525	1070	1510	211	1570	-	1180	379	579	300	429	E
	CRE 32-4-2	U2	11	39.16	DN 100	3529	1337	1510	211	1770	-	1180	379	579	300	572	E
	CRE 32-5-2	U2	15	51.52	DN 100	3528	1483	1510	211	1770	-	1180	379	579	300	542	E
3	CRE 32-1-1	U2	2.2	12.09	DN 150	3501	885	1510	211	1610	570	1245	379	579	300	478	H
	CRE 32-1	U2	3	16.89	DN 150	3514	945	1510	211	1610	570	1245	379	579	300	503	H
	CRE 32-2	U2	7.5	40.86	DN 150	3525	1070	1510	211	1610	770	1245	379	579	300	666	H
	CRE 32-4-2	U2	11	58.74	DN 150	3529	1337	1510	211	1610	770	1245	379	579	300	658	H
	CRE 32-5-2	U2	15	77.28	DN 150	3528	1483	1510	211	1610	970	1245	379	579	300	761	H
4	CRE 32-1-1	U2	2.2	16.12	DN 150	3501	885	1510	211	2110	770	1245	379	579	300	594	H
	CRE 32-1	U2	3	22.52	DN 150	3514	945	1510	211	2110	770	1245	379	579	300	651	H
	CRE 32-2	U2	7.5	54.48	DN 150	3525	1070	1510	211	2110	770	1245	379	579	300	704	H
	CRE 32-4-2	U2	11	78.32	DN 150	3529	1337	1510	211	2110	770	1245	379	579	300	838	H
	CRE 32-5-2	U2	15	103.04	DN 150	3528	1483	1510	211	2110	970	1245	379	579	300	963	H
5	CRE 32-1-1	U2	2.2	20.15	DN 150	3501	885	1510	211	2610	770	1245	379	579	300	738	H
	CRE 32-1	U2	3	28.15	DN 150	3514	945	1510	211	2610	770	1245	379	579	300	761	H
	CRE 32-2	U2	7.5	68.1	DN 150	3525	1070	1510	211	2610	970	1245	379	579	300	863	H
	CRE 32-4-2	U2	11	97.9	DN 150	3529	1337	1510	211	2610	970	1245	379	579	300	1030	H
	CRE 32-5-2	U2	15	128.8	DN 150	3528	1483	1510	211	2610	970	1245	379	579	300	1173	H
6	CRE 32-1-1	U2	2.2	24.18	DN 150	3501	885	1510	211	3110	770	1245	379	579	300	823	H
	CRE 32-1	U2	3	33.78	DN 150	3514	945	1510	211	3110	770	1245	379	579	300	944	H
	CRE 32-2	U2	7.5	81.72	DN 150	3525	1070	1510	211	3110	970	1245	379	579	300	1002	H
	CRE 32-4-2	U2	11	117.48	DN 150	3529	1337	1510	211	3110	970	1245	379	579	300	1202	H
	CRE 32-5-2	U2	15	154.56	DN 150	3528	1483	1510	211	3110	970	1245	379	579	300	1366	H

Voltage code, U2: 3 x 380-415 V ± 10 %, PE.

Design E: APAC design. Systems with the control cabinet mounted on the same base frame as the pumps.

Design H: APAC design. Systems with the control cabinet mounted on its own base frame. The control cabinet can be placed up to 2 metres from the pumps.

All pumps are fitted with three-phase motors.

Dimensions may vary by ± 10 mm.

Hydro MPC-E with CRE 45

Below is the dimensional sketch of a system in different designs. The system is shown as an example. The pumps supplied may differ from the sketch.

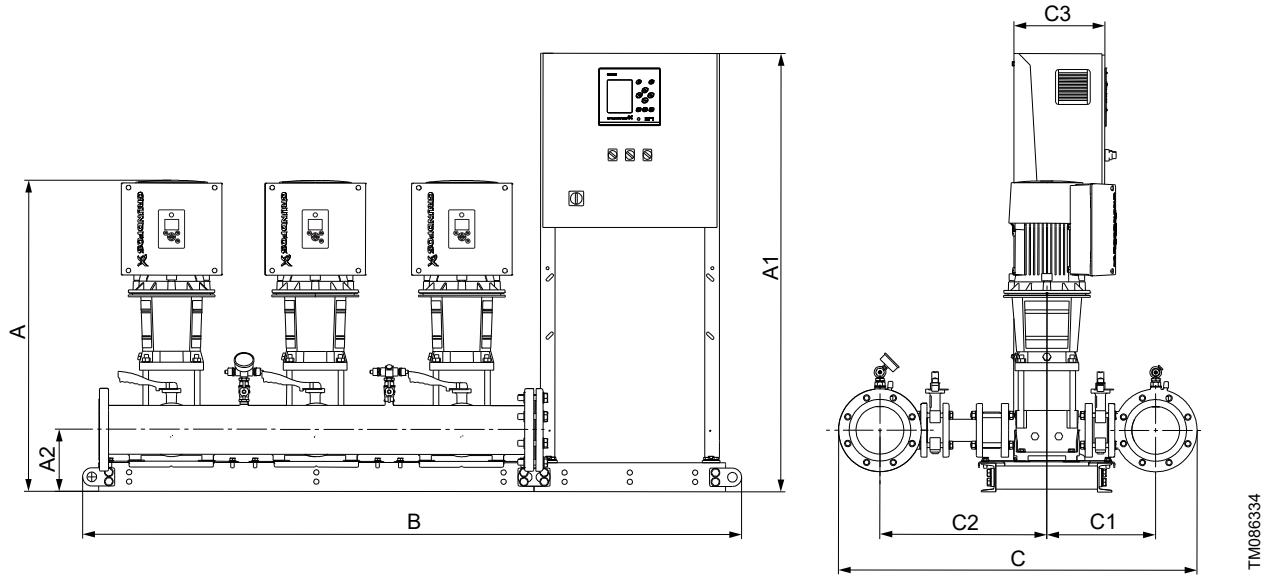

Design H

Electrical data, dimensions and weights

Hydro MPC-E with CRE 45

Number of pumps	Pump type	Voltage code	Motor [kW]	Max. I_N at 400 V [A]	Connections	Rated speed	A [mm]	A1 [mm]	A2 [mm]	B [mm]	B1 [mm]	C [mm]	C1 [mm]	C2 [mm]	C3 [mm]	Net weight [kg]	Design
3	CRE 45-1-1	U2	5.5	29.85	DN 200	3526	1030	1510	246	1610	570	1390	419	629	300	695	H
	CRE 45-1	U2	7.5	40.86	DN 200	3525	1054	1510	246	1610	770	1390	419	629	300	723	H
	CRE 45-2-2	U2	11	58.74	DN 200	3529	1261	1510	246	1610	770	1390	419	629	300	707	H
	CRE 45-2	U2	15	77.28	DN 200	3528	1337	1510	246	1610	970	1390	419	629	300	801	H
	CRE 45-3	U2	18.5	95.88	DN 200	3540	1417	1510	246	1610	970	1390	419	629	300	899	H
	CRE 45-4-2	U2	22	112.98	DN 200	3556	1523	1510	246	1610	970	1390	419	629	300	951	H
4	CRE 45-1-1	U2	5.5	39.8	DN 200	3526	1030	1510	246	2110	770	1390	419	629	300	853	H
	CRE 45-1	U2	7.5	54.48	DN 200	3525	1054	1510	246	2110	770	1390	419	629	300	776	H
	CRE 45-2-2	U2	11	78.32	DN 200	3529	1261	1510	246	2110	770	1390	419	629	300	900	H
	CRE 45-2	U2	15	103.04	DN 200	3528	1337	1510	246	2110	970	1390	419	629	300	1012	H
	CRE 45-3	U2	18.5	127.84	DN 200	3540	1417	1510	246	2110	970	1390	419	629	300	1117	H
	CRE 45-4-2	U2	22	150.64	DN 200	3556	1523	1510	246	2110	970	1390	419	629	300	1189	H
5	CRE 45-1-1	U2	5.5	49.75	DN 200	3526	1030	1510	246	2610	770	1390	419	629	300	909	H
	CRE 45-1	U2	7.5	68.1	DN 200	3525	1054	1510	246	2610	970	1390	419	629	300	953	H
	CRE 45-2-2	U2	11	97.9	DN 200	3529	1261	1510	246	2610	970	1390	419	629	300	1107	H
	CRE 45-2	U2	15	128.8	DN 200	3528	1337	1510	246	2610	970	1390	419	629	300	1235	H
	CRE 45-3	U2	18.5	159.8	DN 200	3540	1417	1510	246	2610	970	1390	419	629	300	1349	H
	CRE 45-4-2	U2	22	188.3	DN 200	3556	1523	1510	246	2610	970	1390	419	629	300	1436	H
6	CRE 45-1-1	U2	5.5	59.7	DN 200	3526	1030	1510	246	3110	970	1390	419	629	300	1068	H
	CRE 45-1	U2	7.5	81.72	DN 200	3525	1054	1510	246	3110	970	1390	419	629	300	1115	H
	CRE 45-2-2	U2	11	117.48	DN 200	3529	1261	1510	246	3110	970	1390	419	629	300	1300	H
	CRE 45-2	U2	15	154.56	DN 200	3528	1337	1510	246	3110	970	1390	419	629	300	1446	H
	CRE 45-3	U2	18.5	191.76	DN 200	3540	1417	1510	246	3110	970	1390	419	629	300	1568	H
	CRE 45-4-2	U2	22	225.96	DN 200	3556	1523	1510	246	3110	970	1390	419	629	300	1677	H

Voltage code, U2: 3 x 380-415 V ± 10 %, PE.

Design H: APAC design. Systems with the control cabinet mounted on its own base frame. The control cabinet can be placed up to 2 metres from the pumps.

All pumps are fitted with three-phase motors.

Dimensions may vary by ± 10 mm.

Hydro MPC-E with CR, CRE 64

Below is the dimensional sketch of a system in different designs. The system is shown as an example. The pumps supplied may differ from the sketch.

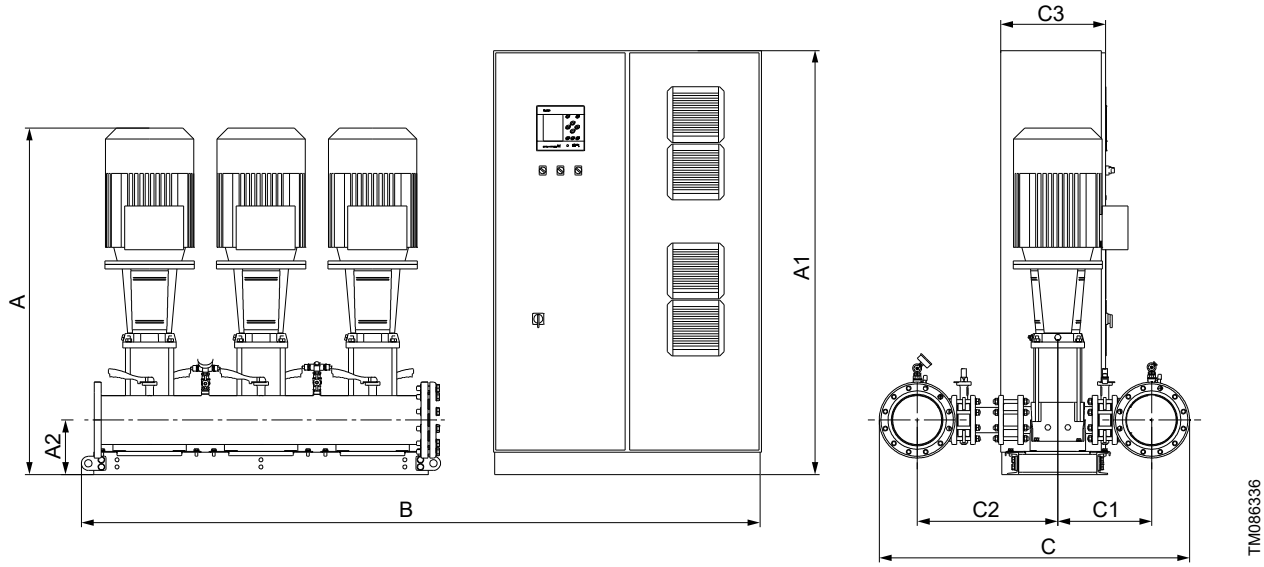

Design G

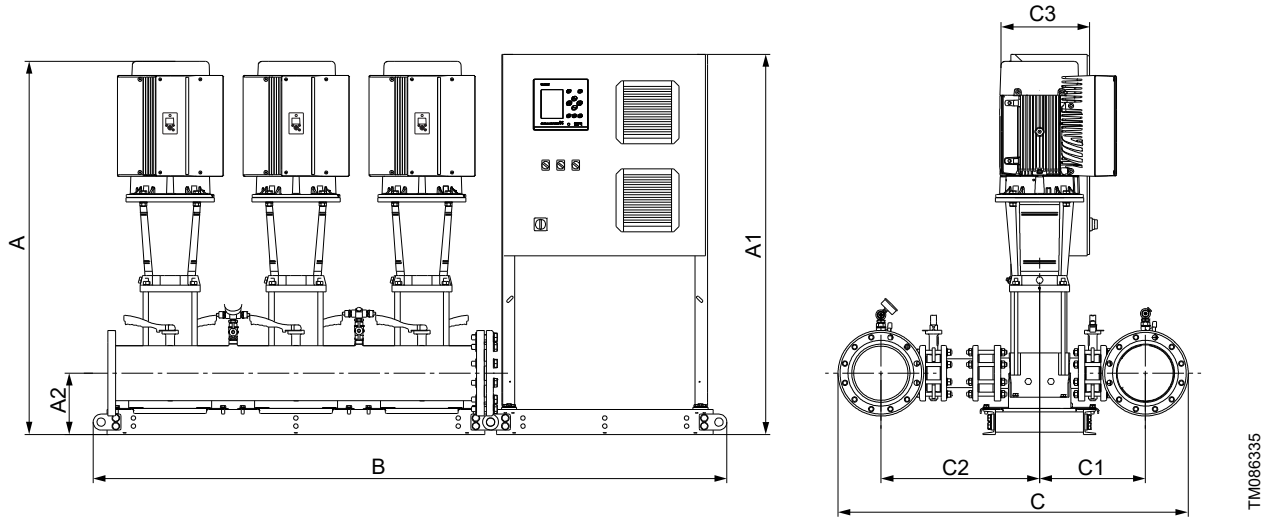

Design H

Electrical data, dimensions and weights

Hydro MPC-E with CR, CRE 64

Number of pumps	Pump type	Voltage code	Motor [kW]	Max. I_N at 400 V [A]	Connections	Rated speed	A [mm]	A1 [mm]	A2 [mm]	B [mm]	B1 [mm]	C [mm]	C1 [mm]	C2 [mm]	C3 [mm]	Net weight [kg]	Design
3	CRE 64-1-1	U2	7.5	40.86	DN 200	3525	1056	1510	246	1610	770	1390	421	631	300	734	H
	CRE 64-1	U2	11	58.74	DN 200	3529	1183	1510	246	1610	770	1390	421	631	300	707	H
	CRE 64-2-2	U2	15	77.28	DN 200	3528	1342	1510	246	1610	970	1390	421	631	300	815	H
	CRE 64-2-1	U2	18.5	95.88	DN 200	3540	1342	1510	246	1610	970	1390	421	631	300	901	H
	CRE 64-3-2	U2	22	112.98	DN 200	3556	1450	1510	246	1610	970	1390	421	631	300	955	H
	CR 64-3	U2	30	141	DN 200	3561	1553	2000	246	1610	1200	1390	421	631	500	1771	G
	CR 64-3-1	U2	30	141	DN 200	3561	1553	2000	246	1610	1200	1390	421	631	500	1815	G
	CR 64-4-2	U2	37	171	DN 200	3566	1661	2000	246	1610	2400	1390	421	631	500	1868	G
4	CRE 64-1-1	U2	7.5	54.48	DN 200	3525	1056	1510	246	2110	770	1390	421	631	300	792	H
	CRE 64-1	U2	11	78.32	DN 200	3529	1183	1510	246	2110	770	1390	421	631	300	900	H
	CRE 64-2-2	U2	15	103.04	DN 200	3528	1342	1510	246	2110	970	1390	421	631	300	1031	H
	CRE 64-2-1	U2	18.5	127.84	DN 200	3540	1342	1510	246	2110	970	1390	421	631	300	1121	H
	CRE 64-3-2	U2	22	150.64	DN 200	3556	1450	1510	246	2110	970	1390	421	631	300	1195	H
	CR 64-3	U2	30	188	DN 200	3561	1553	2000	246	2110	2400	1390	421	631	500	2228	G
	CR 64-3-1	U2	30	188	DN 200	3561	1553	2000	246	2110	2400	1390	421	631	500	2257	G
	CR 64-4-2	U2	37	228	DN 200	3566	1661	2000	246	2110	2400	1390	421	631	500	2530	G
5	CRE 64-1-1	U2	7.5	68.1	DN 200	3525	1056	1510	246	2610	970	1390	421	631	300	970	H
	CRE 64-1	U2	11	97.9	DN 200	3529	1183	1510	246	2610	970	1390	421	631	300	1105	H
	CRE 64-2-2	U2	15	128.8	DN 200	3528	1342	1510	246	2610	970	1390	421	631	300	1256	H
	CRE 64-2-1	U2	18.5	159.8	DN 200	3540	1342	1510	246	2610	970	1390	421	631	300	1350	H
	CRE 64-3-2	U2	22	188.3	DN 200	3556	1450	1510	246	2610	970	1390	421	631	300	1441	H
	CR 64-3	U2	30	235	DN 200	3561	1553	2000	246	2610	2400	1390	421	631	500	2657	G
	CR 64-3-1	U2	30	235	DN 200	3561	1553	2000	246	2610	2400	1390	421	631	500	2657	G
	CR 64-4-2	U2	37	285	DN 200	3566	1661	2000	246	2610	2400	1390	421	631	500	2831	G
6	CRE 64-1-1	U2	7.5	81.72	DN 200	3525	1056	1510	246	3110	970	1390	421	631	300	1137	H
	CRE 64-1	U2	11	117.48	DN 200	3529	1183	1510	246	3110	970	1390	421	631	300	1300	H
	CRE 64-2-2	U2	15	154.56	DN 200	3528	1342	1510	246	3110	970	1390	421	631	300	1473	H
	CRE 64-2-1	U2	18.5	191.76	DN 200	3540	1342	1510	246	3110	970	1390	421	631	300	1572	H
	CRE 64-3-2	U2	22	225.96	DN 200	3556	1450	1510	246	3110	970	1390	421	631	300	1685	H
	CR 64-3	U2	30	282	DN 200	3561	1553	2000	246	3110	2400	1390	421	631	500	3057	G
	CR 64-3-1	U2	30	282	DN 200	3561	1553	2000	246	3110	2400	1390	421	631	500	3057	G
	CR 64-4-2	U2	37	342	DN 200	3566	1661	2000	246	3110	2400	1390	421	631	600	3765	G

Voltage code, U2: 3 x 380-415 V ± 10 %, PE.

Design G: APAC design. Systems with the control cabinet mounted on its own base for floor mounting. The control cabinet can be placed up to 2 metres from the pumps.

Design H: APAC design. Systems with the control cabinet mounted on its own base frame. The control cabinet can be placed up to 2 metres from the pumps.

All pumps are fitted with three-phase motors.

Dimensions may vary by ± 10 mm.

Hydro MPC-E with CR, CRE 95

Below is the dimensional sketch of a system in different designs. The system is shown as an example. The pumps supplied may differ from the sketch.

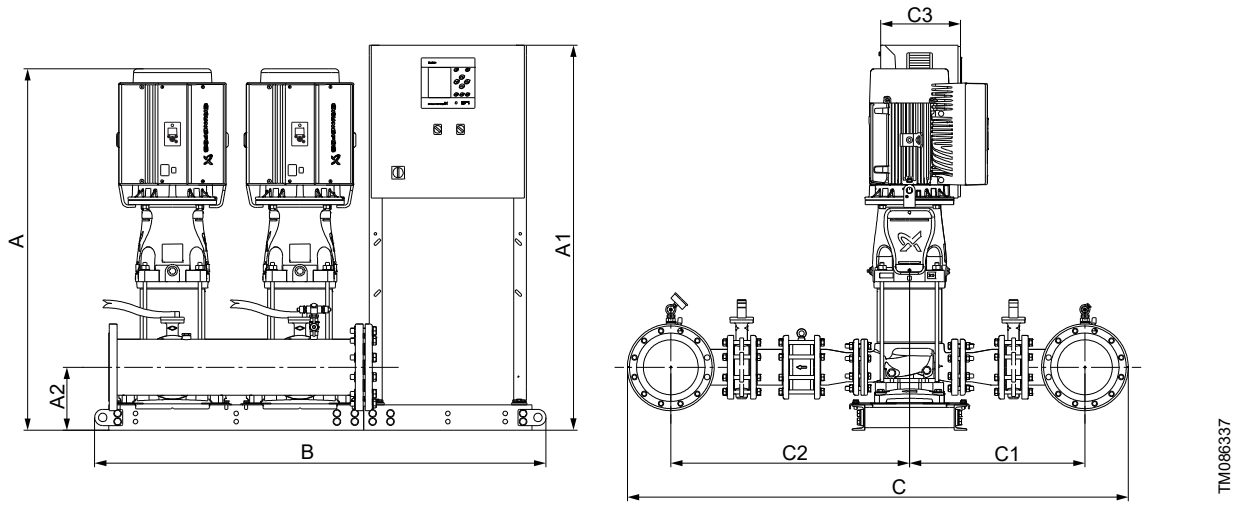

Design E

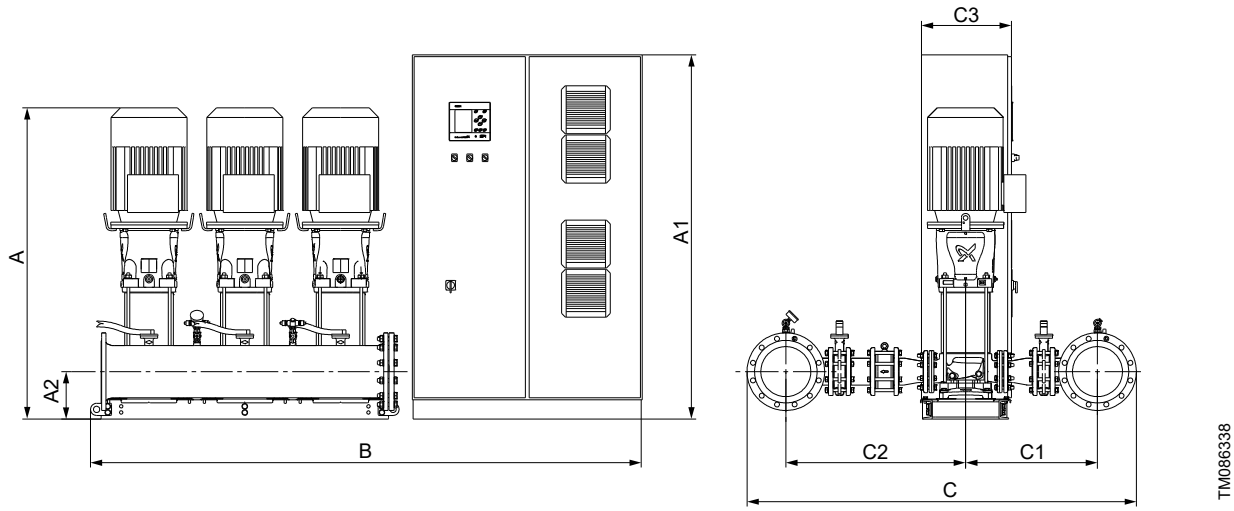

Design G

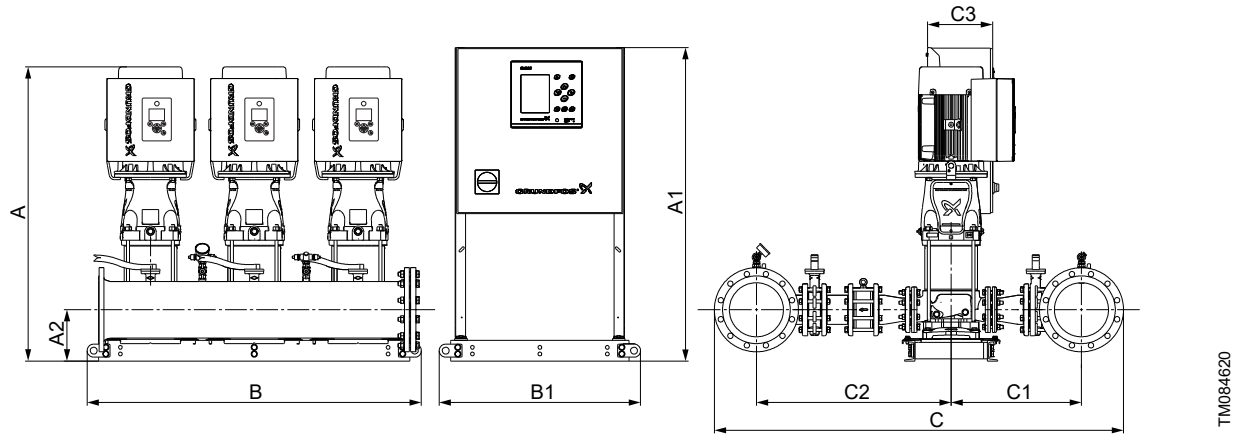

Design H

Electrical data, dimensions and weights

Hydro MPC-E with CR, CRE 95

Number of pumps	Pump type	Voltage code	Motor [kW]	Max. I_N at 400 V [A]	Connections	Rated speed	A [mm]	A1 [mm]	A2 [mm]	B [mm]	B1 [mm]	C [mm]	C1 [mm]	C2 [mm]	C3 [mm]	Net weight [kg]	Design
2	CRE 95-1-1	U2	11	45.04	DN 200	3555	1203	1510	246	1770	-	1970	690	940	300	770	E
	CRE 95-1	U2	15	51.52	DN 200	3557	1279	1510	246	1770	-	1970	690	940	300	721	E
	CRE 95-2-2	U2	18.5	63.72	DN 200	3558	1383	1510	246	1770	-	1970	690	940	300	813	E
	CRE 95-2-1	U2	22	75.32	DN 200	3560	1409	1510	246	1770	-	1970	690	940	300	841	E
	CR 95-3-2	U2	30	98.6	DN 200	3566	1622	2000	246	1110	1200	1970	690	940	500	1254	G
	CR 95-3-1	U2	37	119.8	DN 200	3562	1647	2000	246	1110	1200	1970	690	940	500	1310	G
	CR 95-4-2	U2	45	145	DN 200	3566	1843	2200	246	1110	1000	1970	690	940	500	1488	G
3	CRE 95-1-1	U2	11	67.56	DN 250	3555	1203	1510	246	1610	770	2035	690	940	300	1020	H
	CRE 95-1	U2	15	77.28	DN 250	3557	1279	1510	246	1610	970	2035	690	940	300	1095	H
	CRE 95-2-2	U2	18.5	95.88	DN 250	3558	1383	1510	246	1610	970	2035	690	940	300	1198	H
	CRE 95-2-1	U2	22	112.98	DN 250	3560	1409	1510	246	1610	970	2035	690	940	300	1239	H
	CR 95-3-2	U2	30	147.9	DN 250	3566	1622	2000	246	1610	1200	2035	690	940	500	2054	G
	CR 95-3-1	U2	37	179.7	DN 250	3562	1647	2000	246	1610	2400	2035	690	940	500	2121	G
	CR 95-4-2	U2	45	217.5	DN 250	3566	1843	2000	246	1610	2400	2035	690	940	600	2430	G
4	CRE 95-1-1	U2	11	90.08	DN 250	3555	1203	1510	246	2110	770	2035	690	940	300	1294	H
	CRE 95-1	U2	15	103.04	DN 250	3557	1279	1510	246	2110	970	2035	690	940	300	1380	H
	CRE 95-2-2	U2	18.5	127.84	DN 250	3558	1383	1510	246	2110	970	2035	690	940	300	1493	H
	CRE 95-2-1	U2	22	150.64	DN 250	3560	1409	1510	246	2110	970	2035	690	940	300	1549	H
	CR 95-3-2	U2	30	197.2	DN 250	3566	1622	2000	246	2110	2400	2035	690	940	500	2542	G
	CR 95-3-1	U2	37	239.6	DN 250	3562	1647	2000	246	2110	2400	2035	690	940	500	2668	G
	CR 95-4-2	U2	45	290	DN 250	3566	1843	2000	246	2110	2400	2035	690	940	600	3035	G
5	CRE 95-1-1	U2	11	112.6	DN 300	3555	1203	1510	246	2610	970	2090	690	940	300	1713	H
	CRE 95-1	U2	15	128.8	DN 300	3557	1279	1510	246	2610	970	2090	690	940	300	1808	H
	CRE 95-2-2	U2	18.5	159.8	DN 300	3558	1383	1510	246	2610	970	2090	690	940	300	1932	H
	CRE 95-2-1	U2	22	188.3	DN 300	3560	1409	1510	246	2610	970	2090	690	940	300	2000	H
	CR 95-3-2	U2	30	246.5	DN 300	3566	1622	2000	246	2610	2400	2090	690	940	500	3215	G
	CR 95-3-1	U2	37	299.5	DN 300	3562	1647	2000	246	2610	2400	2090	690	940	500	3325	G
	CR 95-4-2	U2	45	362.5	DN 300	3566	1843	2000	246	2610	3600	2090	690	940	600	4006	G
6	CRE 95-1-1	U2	11	135.12	DN 350	3555	1203	1510	246	3110	970	2150	690	940	300	2060	H
	CRE 95-1	U2	15	154.56	DN 350	3557	1279	1510	246	3110	970	2150	690	940	300	2166	H
	CRE 95-2-2	U2	18.5	191.76	DN 350	3558	1383	1510	246	3110	970	2150	690	940	300	2301	H
	CRE 95-2-1	U2	22	225.96	DN 350	3560	1409	1510	246	3110	970	2150	690	940	300	2387	H
	CR 95-3-2	U2	30	295.8	DN 350	3566	1622	2000	246	3110	2400	2150	690	940	500	3694	G
	CR 95-3-1	U2	37	359.4	DN 350	3562	1647	2000	246	3110	2400	2150	690	940	600	4325	G
	CR 95-4-2	U2	45	435	DN 350	3566	1843	2000	246	3110	3600	2150	690	940	600	4669	G

Voltage code, U2: 3 x 380-415 V ± 10 %, PE.

Design E: APAC design. Systems with the control cabinet mounted on the same base frame as the pumps.

Design G: APAC design. Systems with the control cabinet mounted on its own base for floor mounting. The control cabinet can be placed up to 2 metres from the pumps.

Design H: APAC design. Systems with the control cabinet mounted on its own base frame. The control cabinet can be placed up to 2 metres from the pumps.

All pumps are fitted with three-phase motors.

Dimensions may vary by ± 10 mm.

Hydro MPC-E with CR, CRE 125

Below is the dimensional sketch of a system in different designs. The system is shown as an example. The pumps supplied may differ from the sketch.

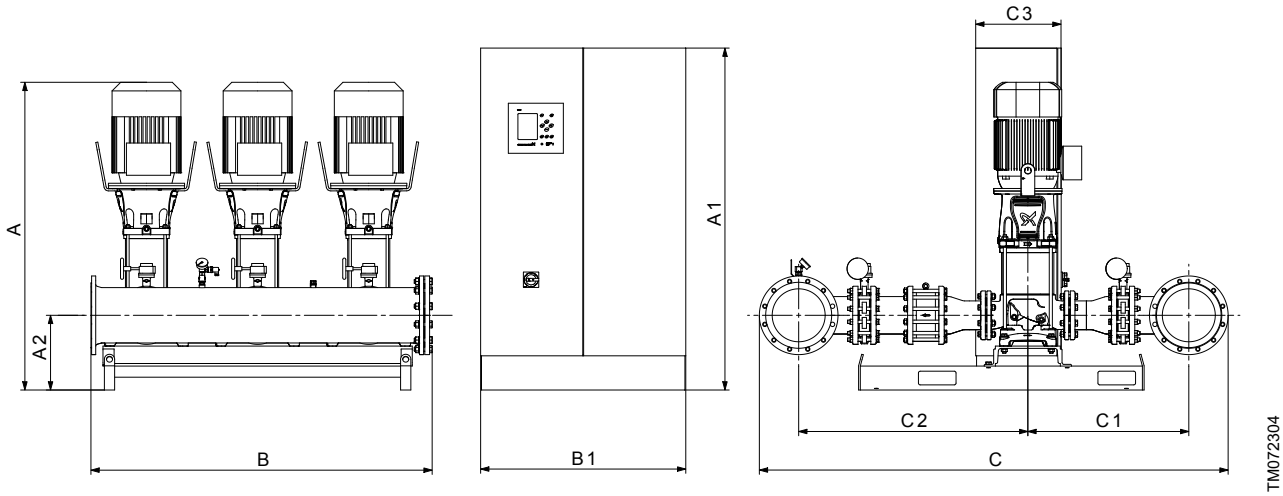

Design G

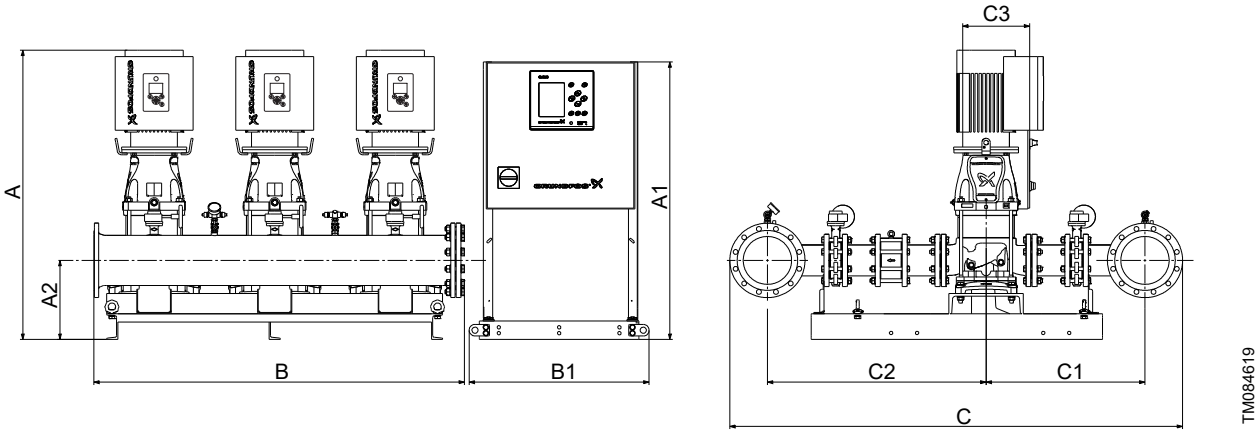

Design H

Electrical data, dimensions and weights

Hydro MPC-E with CR, CRE 125

Number of pumps	Pump type	Voltage code	Motor [kW]	Max. I_N at 400 V [A]	Connections	Rated speed	A [mm]	A1 [mm]	A2 [mm]	B [mm]	B1 [mm]	C [mm]	C1 [mm]	C2 [mm]	C3 [mm]	Net weight [kg]	Design
2	CRE 125-1-1	U2	15	51.52	DN 250	3556	1518	1510	423	1328	770	2440	860	1176	300	1100	H
	CRE 125-1	U2	22	75.32	DN 250	3565	1544	1510	423	1328	770	2440	860	1176	300	1209	H
	CR 125-2-2	U2	30	98.6	DN 250	3574	1771	2000	433	1328	1200	2440	860	1176	500	1625	G
	CR 125-2	U2	37	119.8	DN 250	3571	1796	2000	433	1328	1200	2440	860	1176	500	1681	G
	CR 125-3-2	U2	45	145	DN 250	3566	2013	2200	433	1328	1000	2440	860	1176	500	1879	G
	CR 125-3	U2	55	174.4	DN 250	3581	2051	2200	433	1328	1000	2440	860	1176	500	2160	G
3	CRE 125-1-1	U2	15	77.28	DN 250	3556	1518	1510	423	1978	970	2440	860	1176	300	1517	H
	CRE 125-1	U2	22	112.98	DN 250	3565	1544	1510	423	1978	970	2440	860	1176	300	1643	H
	CR 125-2-2	U2	30	147.9	DN 250	3574	1771	2000	433	1978	1200	2440	860	1176	500	2466	G
	CR 125-2	U2	37	179.7	DN 250	3571	1796	2000	433	1978	2400	2440	860	1176	500	2543	G
	CR 125-3-2	U2	45	217.5	DN 250	3566	2013	2000	433	1978	2400	2440	860	1176	600	2871	G
	CR 125-3	U2	55	261.6	DN 250	3581	2051	2000	433	1978	2400	2440	860	1176	600	3204	G
4	CRE 125-1-1	U2	15	103.04	DN 300	3556	1518	1510	423	2630	970	2495	860	1176	300	2099	H
	CRE 125-1	U2	22	150.64	DN 300	3565	1544	1510	423	2630	970	2495	860	1176	300	2246	H
	CR 125-2-2	U2	30	197.2	DN 300	3574	1771	2000	433	2630	2400	2495	860	1176	500	3248	G
	CR 125-2	U2	37	239.6	DN 300	3571	1796	2000	433	2630	2400	2495	860	1176	500	3388	G
	CR 125-3-2	U2	45	290	DN 300	3566	2013	2000	433	2630	2400	2495	860	1176	600	3781	G
	CR 125-3	U2	55	348.8	DN 300	3581	2051	2000	433	2630	2400	2495	860	1176	600	4264	G
5	CRE 125-1-1	U2	15	128.8	DN 350	3556	1518	1510	423	3282	970	2555	860	1176	300	2592	H
	CRE 125-1	U2	22	188.3	DN 350	3565	1544	1510	423	3282	970	2555	860	1176	300	2755	H
	CR 125-2-2	U2	30	246.5	DN 350	3574	1771	2000	433	3282	2400	2555	860	1176	500	3976	G
	CR 125-2	U2	37	299.5	DN 350	3571	1796	2000	433	3282	2400	2555	860	1176	500	4104	G
	CR 125-3-2	U2	45	362.5	DN 350	3566	2013	2000	433	3282	3600	2555	860	1176	600	4817	G
	CR 125-3	U2	55	436	DN 350	3581	2051	2000	433	3282	3600	2555	860	1176	600	5410	G
6	CRE 125-1-1	U2	15	154.56	DN 350	3556	1518	1510	423	3932	970	2555	860	1176	300	3012	H
	CRE 125-1	U2	22	225.96	DN 350	3565	1544	1510	423	3932	970	2555	860	1176	300	3197	H
	CR 125-2-2	U2	30	295.8	DN 350	3574	1771	2000	433	3932	2400	2555	860	1176	500	4595	G
	CR 125-2	U2	37	359.4	DN 350	3571	1796	2000	433	3932	2400	2555	860	1176	600	5248	G
	CR 125-3-2	U2	45	435	DN 350	3566	2013	2000	433	3932	3600	2555	860	1176	600	5629	G
	CR 125-3	U2	55	523.2	DN 350	3581	2051	2000	433	3932	3600	2555	860	1176	600	6338	G

Voltage code, U2: 3 x 380-415 V ± 10 %, PE.

Design G: APAC design. Systems with the control cabinet mounted on its own base for floor mounting. The control cabinet can be placed up to 2 metres from the pumps.

Design H: APAC design. Systems with the control cabinet mounted on its own base frame. The control cabinet can be placed up to 2 metres from the pumps.

All pumps are fitted with three-phase motors.

Dimensions may vary by ± 10 mm.

Hydro MPC-E with CR, CRE 155

Below is the dimensional sketch of a system in different designs. The system is shown as an example. The pumps supplied may differ from the sketch.

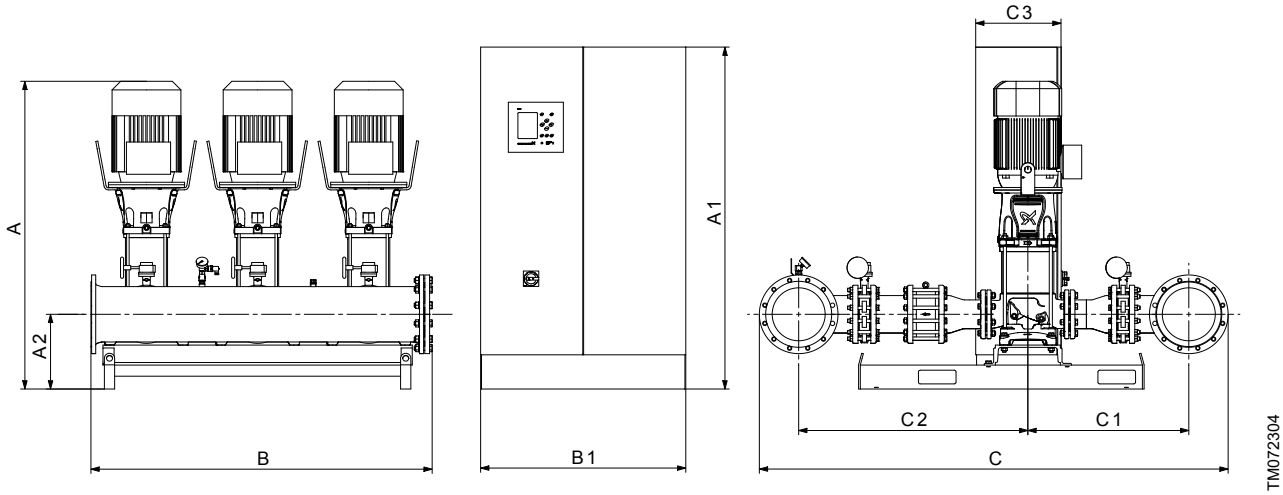

Design G

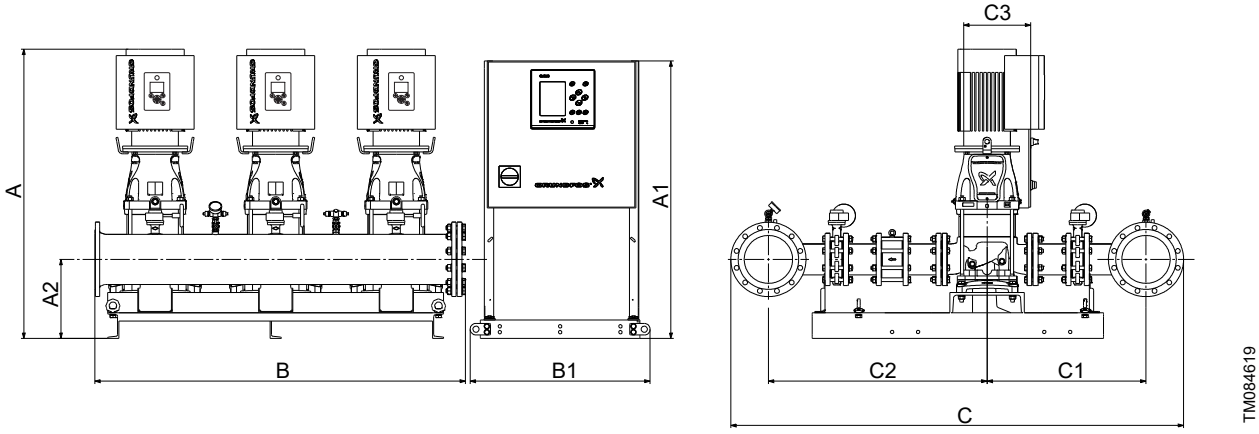

Design H

Electrical data, dimensions and weights

Hydro MPC-E with CR, CRE 155

Number of pumps	Pump type	Voltage code	Motor [kW]	Max. I_N at 400 V [A]	Connections	Rated speed	A [mm]	A1 [mm]	A2 [mm]	B [mm]	B1 [mm]	C [mm]	C1 [mm]	C2 [mm]	C3 [mm]	Net weight [kg]	Design
2	CRE 155-1-1	U2	18.5	63.92	DN 250	3559	1518	1510	423	1328	770	2688	947	1337	300	1275	H
	CR 155-1	U2	30	98.6	DN 250	3575	1649	2000	423	1328	1200	2688	947	1337	500	1691	G
	CR 155-2-2	U2	37	119.8	DN 250	3561	1796	2000	423	1328	1200	2688	947	1337	500	1764	G
	CR 155-2-1	U2	45	145	DN 250	3567	1891	2200	423	1328	1000	2688	947	1337	500	1939	G
	CR 155-3-3	U2	55	174.4	DN 250	3570	2051	2200	423	1328	1000	2688	947	1337	500	2249	G
3	CRE 155-1-1	U2	18.5	95.88	DN 300	3559	1518	1510	423	1980	970	2743	947	1337	300	1812	H
	CR 155-1	U2	30	147.9	DN 300	3575	1649	2000	423	1980	1200	2743	947	1337	500	2635	G
	CR 155-2-2	U2	37	179.7	DN 300	3561	1796	2000	423	1980	2400	2743	947	1337	500	2735	G
	CR 155-2-1	U2	45	217.5	DN 300	3567	1891	2000	423	1980	2400	2743	947	1337	600	3030	G
	CR 155-3-3	U2	55	261.6	DN 300	3570	2051	2000	423	1980	2400	2743	947	1337	600	3408	G
4	CRE 155-1-1	U2	18.5	127.84	DN 350	3559	1518	1510	423	2632	970	2803	947	1337	300	2481	H
	CR 155-1	U2	30	197.2	DN 350	3575	1649	2000	423	2632	2400	2803	947	1337	500	3483	G
	CR 155-2-2	U2	37	239.6	DN 350	3561	1796	2000	423	2632	2400	2803	947	1337	500	3653	G
	CR 155-2-1	U2	45	290	DN 350	3567	1891	2000	423	2632	2400	2803	947	1337	600	4002	G
	CR 155-3-3	U2	55	348.8	DN 350	3570	2051	2000	423	2632	2400	2803	947	1337	600	4542	G
5	CRE 155-1-1	U2	18.5	159.8	DN 400	3559	1518	1510	423	3284	970	2863	947	1337	300	3024	H
	CR 155-1	U2	30	246.5	DN 400	3575	1649	2000	423	3284	2400	2863	947	1337	500	4239	G
	CR 155-2-2	U2	37	299.5	DN 400	3561	1796	2000	423	3284	2400	2863	947	1337	500	4403	G
	CR 155-2-1	U2	45	362.5	DN 400	3567	1891	2000	423	3284	3600	2863	947	1337	600	5062	G
	CR 155-3-3	U2	55	436	DN 400	3570	2051	2000	423	3284	3600	2863	947	1337	600	5723	G
6	CRE 155-1-1	U2	18.5	191.76	DN 400	3559	1518	1510	423	3934	970	2863	947	1337	300	3526	H
	CR 155-1	U2	30	295.8	DN 400	3575	1649	2000	423	3934	2400	2863	947	1337	500	4916	G
	CR 155-2-2	U2	37	359.4	DN 400	3561	1796	2000	423	3934	2400	2863	947	1337	600	5611	G
	CR 155-2-1	U2	45	435	DN 400	3567	1891	2000	423	3934	3600	2863	947	1337	600	5928	G
	CR 155-3-3	U2	55	523.2	DN 400	3570	2051	2000	423	3934	3600	2863	947	1337	600	6716	G

Voltage code, U2: 3 x 380-415 V ± 10 %, PE.

Design G: APAC design. Systems with the control cabinet mounted on its own base for floor mounting. The control cabinet can be placed up to 2 metres from the pumps.

Design H: APAC design. Systems with the control cabinet mounted on its own base frame. The control cabinet can be placed up to 2 metres from the pumps.

All pumps are fitted with three-phase motors.

Dimensions may vary by ± 10 mm.

10. Optional equipment

All optional equipment must be specified when ordering the system, as it must be fitted from factory prior to delivery. See options in the type key.

The options listed below are not all available for all markets.

Option		Description	Location	Options (type key for Hydro MPC)
Standard hydraulics, PN 16		This is the standard option for Hydro MPC hydraulics rated for PN 16 as a minimum.	System	A
Pilot pump		The pilot pump takes over operation from main pumps during periods when the consumption is so low that the pilot pump can deliver the flow and in that way maintain a high efficiency, the typically pump size is 25 % of the main pump. Pilot pumps are available for Hydro MPC-E and -F control variants.	System	B
Bypass connection	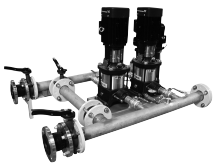	The bypass connection is a pipe diversion consisting of a manifold, two isolating valves and a non-return valve. The bypass connection allows water to bypass the pumps from the inlet to the outlet manifold.	System	C
NRV on inlet side		As standard, the non-return valves are fitted on the outlet side of the pumps of the system. In installations with suction lift, we recommend that you install non-return valves on the inlet side of the pumps to prevent dry running.	Inlet side	D
Elbow manifold	-	Manifolds with elbows in one end can reduce dead ends. On request.	Inlet or outlet side	E
No inlet manifold		Depending on the application or installation site, the system can be ordered without inlet manifold.	-	F
Diaphragm tank		In buildings it is usually necessary to install a diaphragm tank on the outlet side of the system. As standard, the system is designed for a maximum system pressure of 16 bar. A standard system includes pressure transmitters and one gauge with a rated pressure of 16 bar (full scale). Hydro MPC systems designed for PN 16 diaphragm tanks up to 33 litres are mounted on the outlet manifold.	On outlet manifold Up to 33 l	G
Dry-running protection		The system must be protected against dry running. The inlet conditions determine the type of dry-running protection. • If the system draws water from a tank or a well, select a level switch or an electrode relay for dry-running protection. • If the system has an inlet pressure, select a pressure transmitter or a pressure switch for dry-running protection. For further description, see section Dry-running protection.	On inlet manifold	H
Repair switch	-	By means of a repair switch fitted on the individual pumps of the Hydro system, the supply voltage to the pump can be switched off during, for example, repair. One switch per pump. For further description, see section Repair switch.	On the pump	I

Option		Description	Location	Options (type key for Hydro MPC)
Redundant primary sensor		To increase the reliability, a redundant primary sensor can be connected as backup sensor for the primary sensor. The redundant primary sensor must be of the same type as the primary sensor. For further description, see section Redundant primary sensor.	-	J
One free pump position	-	Systems with one free pump position are available from a 3-pump up to a 6-pump system. The systems, including the control cabinet, are prepared for the future pump.	-	K
Two free pump positions		Systems with two free pump positions are available from a 4-pump up to a 6-pump system. The systems, including the control cabinet, are prepared for the future pumps.	-	L
Three free pump positions		Systems with three free pump positions are available from a 5-pump up to a 6-pump system. The systems, including the control cabinet, are prepared for the future pumps.	-	M
PN 10 pressure rating	-	With this option the Hydro MPC hydraulics are rated to PN10 as a minimum.	-	N
PN 25 pressure rating	-	With this option the Hydro MPC hydraulics are rated to PN 25 as a minimum.	-	O
PN 40 pressure rating	-	With this option the Hydro MPC hydraulics are rated to PN 40 as a minimum.	-	P
Low pre-pressure (low NPSH)	-	The systems are available with CR low-NPSH pumps designed to eliminate the risk of cavitation and ensure a stable and reliable operation. The CR low-NPSH has a special inlet design that reduces the NPSH value required by the pump and prevents erosion and destruction of pump, pipes and valves. The improved inlet design may expose the low-NPSH pump to more stress than conventional pumps without affecting the stability of operation. The CR low-NPSH pump reduces excess pressure itself and does not require any additional tank to provide supplementary pressure. Systems are available on request with CR low-NPSH from CR, CRI 3 to CR, CRI 20 and CRN, CRNE from CRN, CRNE 3 to CRN, CRNE 64.	-	Q
RPM = 50 Hz	-	50 Hz pumps.	-	R
Customised variant	-	Customised systems can be produced on request. For further information contact your local Grundfos sales office.	-	S
Certificate	-	For further information contact your local Grundfos sales office.	-	T
Undersized motor		We recommend a Hydro system with undersized motors if operating conditions deviate from those stated in the Hydro MPC Data Booklet and Grundfos Product Center. We especially recommend undersized motors if the duty point is constant and the flow rate is significantly lower than the maximum recommended flow rate.	-	U
Standard controls with options		See Control MPC installation and operating instructions.	-	V
Customised controls		See Control MPC installation and operating instructions.	-	W

Related information

Type key
Dry-running protection
Repair switch
Redundant primary sensor

Dry-running protection

Description	Range [bar]
Dry-running protection by means of electrode relay, without electrodes and electrode cable [11]	-
Pressure switch [11]	0-2
	0-4
	0-8
	0-16
Inlet pressure sensor [12]	0-1
	0-4
	0-6
	0-10
	0-16

[11] Only one type of dry-running protection can be selected, as it must be connected to the same digital input as CU 352. This also applies to level switches. For further information about CU 352, see section CU 352.

[12] The inlet pressure sensor is normally connected to the analog input AI2 of CU 352. If this input is used for another function, such as "External setpoint", connect the sensor to analog input AI3. If, however, this input is also occupied, increase the number of analog inputs by installing an IO 351B module, see Control MPC installation and operating instructions. For further information about IO 351B, see section IO 351.

Related information

CU 352
IO 351

Repair switch

Description	Motor current and starting method
Repair switch	≤ 16 A, DOL
	> 16 A < 25 A, DOL
	> 25 A < 40 A, DOL
	> 40 A < 63 A, DOL
	> 63 A < 80 A, DOL
	> 80 A < 100 A, DOL
	> 100 A < 125 A, DOL
	> 125 A < 175 A, DOL
	> 175 A < 250 A, DOL
	≤ 16 A, Y/Δ
	> 16 A < 25 A, Y/Δ
	> 25 A < 40 A, Y/Δ
	> 40 A < 63 A, Y/Δ
	> 63 A < 80 A, Y/Δ
	> 80 A < 100 A, Y/Δ
	> 100 A < 125 A, Y/Δ
	> 125 A < 175 A, Y/Δ
	> 175 A < 250 A, Y/Δ

Redundant primary sensor

Description	Range [bar]
Redundant primary sensor [13]	0-10
	0-16

[13] The redundant primary sensor is normally connected to the analog input AI3 of CU 352. If this input is used for another function, such as "External setpoint", connect the redundant sensor to analog input AI2. If this input is also occupied, increase the number of analog inputs by installing an IO 351B module, see Control MPC installation and operating instructions.

11. Accessories

All accessories can be fitted to the system after delivery.

Option		Description
Dry-running protection	-	The system must be protected against dry running. Dry-running protection by means of level switches is used in installations where the system draws water from a tank or well. For further description, see section Dry-running protection.
Diaphragm tank		A diaphragm tank can be installed on the outlet side of the system. The diaphragm tanks are separate tanks without valve, fittings and pipes. For further data, see section Diaphragm tank.
Foot valve		Foot valves are typically used in minor systems with suction lift, for example when Hydro MPC draws water from a break tank placed at a lower geodetic height than the system. Foot valves are designed to ensure optimum inlet conditions. For further description, see section Foot valve.
Adjustable vibration damper		The vibration damper reduces any vibrations from the system to the floor allowing the system to be height-adjusted by ± 20 mm. For further description, see section Adjustable vibration damper.
Grundfos GO	-	Grundfos GO is used for wireless infrared or radio communication with the pumps. Various Grundfos GO variants are available. For further description, see section Grundfos GO.
MI 301		The MI 301 is a module with built-in infrared and radio communication. Use the MI 301 in conjunction with an Android- or iOS-based Smartphone with a Bluetooth connection. The MI 301 has a rechargeable Li-ion battery and must be charged separately. For further description, see section Grundfos GO.

Related information

Dry-running protection
Diaphragm tank
Foot valve
Adjustable vibration damper
Grundfos GO

Dry-running protection

Description	Product number
Level switch including 5 metres of cable [14]	96020142

[14] The input for the level switch is not included.

See section Optional equipment.

Only one type of dry-running protection can be selected, as it must be connected to the same digital input as CU 352. This also applies to level switches.

Related information

10. Optional equipment

Diaphragm tank

Diaphragm tank, 10 bar

Capacity [litres]	Connection	Product number
8	G 3/4	96528335
12	G 3/4	96528336
18	G 3/4	96528337
24	G 1	96528339
33	G 1	96528340
60	G 1	96528341
80	G 1	96528342
100	G 1	99082696
150	G 1	99082697
200	G 1 1/4	99082698
300	G 1 1/4	99082699
500	G 1 1/4	99082700
750	G 2	99082701
1000	G 2	99082702
1500	G 2	99082703
2000	G 2	99082704
3000	G 2	99082705

Diaphragm tank, 16 bar

Capacity [litres]	Connection	Product number
8	G 3/4	96573347
12	G 3/4	96573348
25	G 3/4	96573349
80	G 1	96603420
100	G 1	99082706
150	G 1	99082707
200	G 1 1/4	99082708
300	G 1 1/4	99082709
500	G 1 1/4	99082710
750	G 2	99082711
1000	G 2	99082712
1500	G 2	99082713
2000	G 2	99082714
3000	G 2 1/2	99082715

Foot valve

Description	Connection	Product number
Foot valve	Rp 2	956120
	Rp 3	956130
	Rp 4	956449
	Rp 5	956459
	Rp 6	956461

Adjustable vibration damper

Description	Pump	Product number
Vibration damper	CR, CRI, CRE, CRIE 3 and 5	96412344
	CR, CRI, CRE, CRIE 10 to 20	96412345
	CR, CRE 32 to 90	96412347

The product number covers one vibration damper.

Grundfos GO

The Grundfos GO is used for wireless infrared or radio communication with the pumps.

MI 301

The MI 301 is a module with built-in infrared and radio communication. The MI 301 must be used in conjunction with an Android or iOS-based Smartphone with a Bluetooth connection. The MI 301 has rechargeable Li-ion battery and must be charged separately.

TM053890

MI 301

Supplied with the product:

- Grundfos MI 301
- battery charger
- quick guide.

Product numbers for MI 301

Grundfos GO variant	Product number
Grundfos MI 301	98046408

12. Product manuals

Title	Document type	QR code	Link	Publication number
CR, CRI, CRN (50 Hz)	Data booklet		http://net.grundfos.com/qr/i/99301179	99301179
CR, CRI, CRN (60 Hz)	Data booklet		http://net.grundfos.com/qr/i/99301180	99301180
CR, CRI, CRN, CRT, CRE, CRIE, CRNE, CRTE custom-built pumps	Data booklet		http://net.grundfos.com/qr/i/96486346	96486346
CRE, CRIE, CRNE	Data booklet		http://net.grundfos.com/qr/i/98423696	98423696
CR, CRI, CRN	Installation and operating instructions		http://net.grundfos.com/qr/i/96462123	96462123
CR, CRN 95-255	Installation and operating instructions		http://net.grundfos.com/qr/i/99078486	99078486
CR, CRN 95-255	Service instructions		http://net.grundfos.com/qr/i/99233360	99233360
Hydro MPC	Installation and operating instructions		http://net.grundfos.com/qr/i/96605907	96605907
Hydro MPC	Quick guide		http://net.grundfos.com/qr/i/99107595	99107595
Control MPC	Installation and operating instructions		http://net.grundfos.com/qr/i/99725671	99725671
Tank calculation in E systems	-		http://net.grundfos.com/qr/i/92845021	92845021

13. Alternative systems

System	Data and features	
Hydro Multi-E 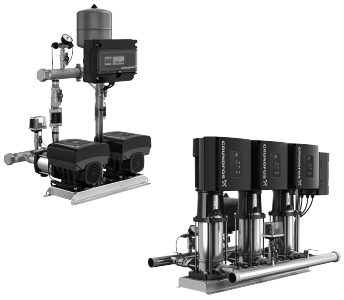	Maximum head	10 to 145 m
	Flow rate	2 to 144 m^3/h
	Max. operating pressure	16 bar
	Number of pumps	2 or 4
	Pump type	CRE, CRIE, CME
	Features	Specially designed for water supply in buildings. 100 % adaptation to consumption. Easy to install and commission. Small footprint. Data communication via Grundfos GO.

14. Grundfos Product Center

Online search and sizing tool to help you make the right choice.
From the international view, you can select your specific country to view the product range available to you.
International view: *https://product-selection.grundfos.com*

All the information you need in one place

Performance curves, technical specifications, pictures, dimensional drawings, motor curves, wiring diagrams, spare parts, service kits, 3D drawings, documents, system parts. The Product Center displays any recent and saved items - including complete projects - right on the main page.

Downloads

On the product pages, you can download installation and operating instructions, data booklets, service instructions, etc., in PDF format.

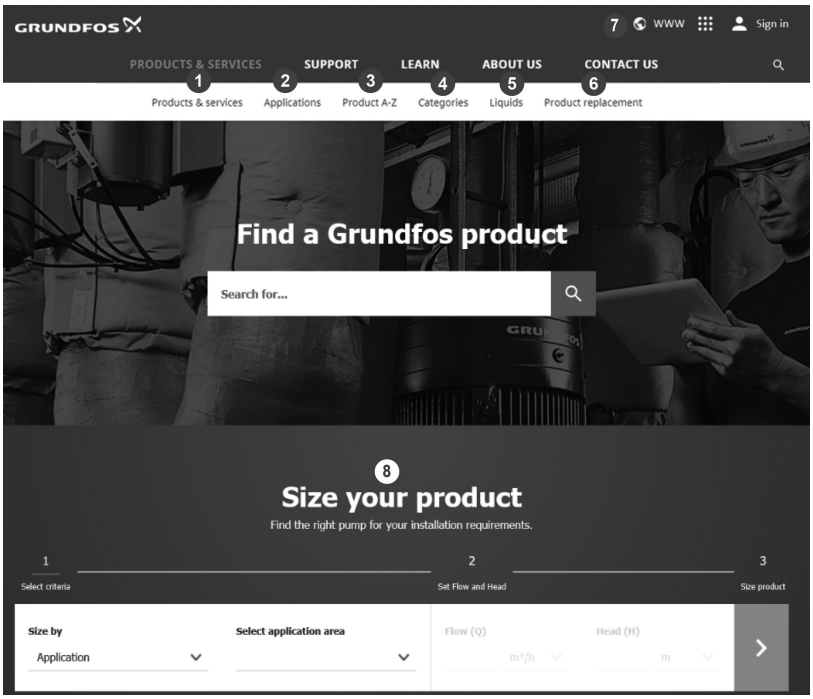

When you select your country, you will see the menus below. Note that some menus may not be available depending on the country.
Example: *https://product-selection.grundfos.com/uk*

Pos.	Description
1	**Products & services** enables you to find products and documents by typing a product number or name into the search field.
2	**Applications** enables you to choose an application to see how Grundfos can help you design and optimise your system.
3	**Products A-Z** enables you to look through a list of all the Grundfos products.
4	**Categories** enables you to look for a product category.
5	**Liquids** enables you to find pumps designed for aggressive, flammable or other special liquids.
6	**Product replacement** enables you to find a suitable replacement.
7	**WWW** enables you to select the country, which changes the language, the available product range and the structure of the website.
8	**Sizing** enables you to size a product based on your application and operating conditions.

15. Grundfos GO

Mobile solution for professionals on the GO!

Grundfos GO is the mobile toolbox for professional users on the go. It is the most comprehensive platform for mobile pump control and pump selection, including sizing, replacement and documentation. It offers intuitive, handheld assistance and access to Grundfos online tools, and it saves valuable time for reporting and data collection.

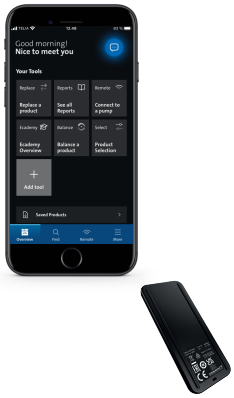

GET IT ON Google play

Available on the App Store

Trademarks displayed in this material, including but not limited to Grundfos and the Grundfos logo, are registered trademarks owned by The Grundfos Group. © 2024 Grundfos Holding A/S, all rights reserved.

92859963 **04.2024**
ECM: 1385901

GRUNDFOS Holding A/S
Poul Due Jensens Vej 7
DK-8850 Bjerringbro
Tel: +45 87 50 14 00
www.grundfos.com

GRUNDFOS