MAGNA3

MODEL E

net.grundfos.com/qr/i/92662525

be
think
innovate

GRUNDFOS

MAGNA3
GRUNDFOS
MAGNA3
OK

MAGNA3 D
GRUNDFOS
MAGNA3
OK

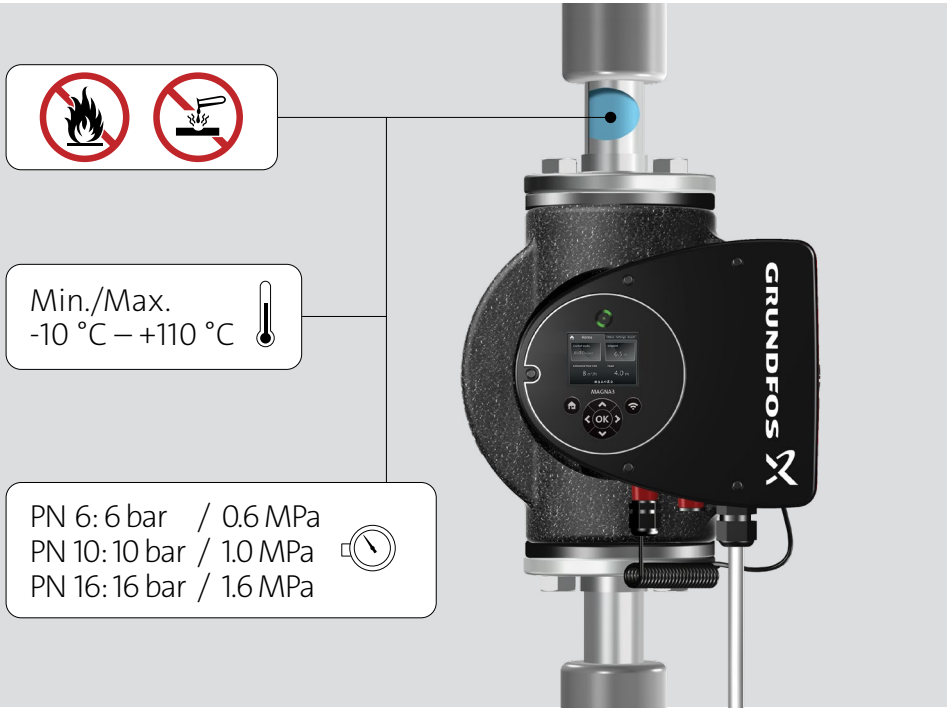
Min./Max.
-10 °C – +110 °C
PN 6: 6 bar / 0.6 MPa
PN 10: 10 bar / 1.0 MPa
PN 16: 16 bar / 1.6 MPa
GRUNDFOS

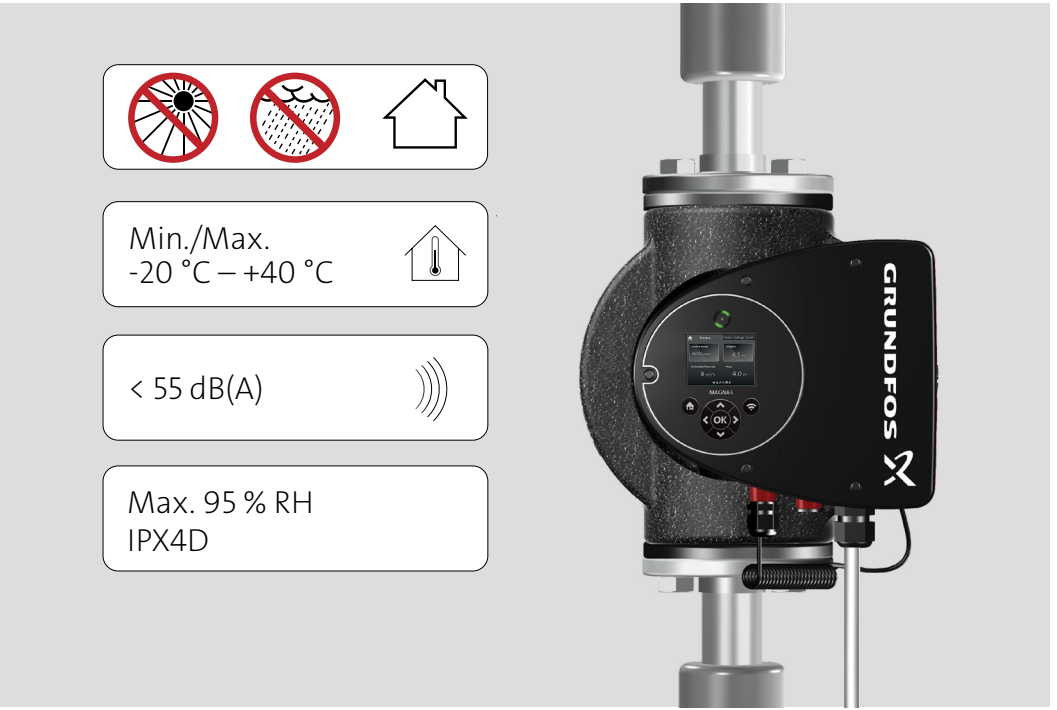
Min./Max.
-20 °C – +40 °C
< 55 dB(A)
Max. 95 % RH
IPX4D
GRUNDFOS

GRUNDFOS

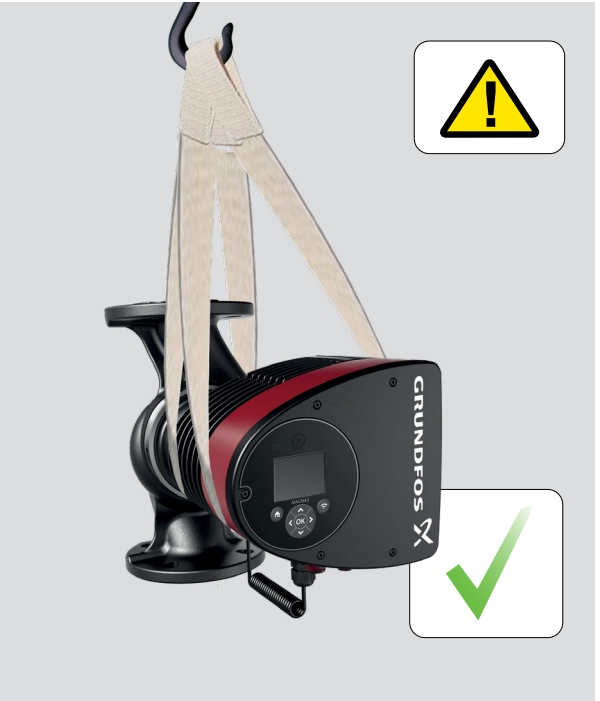
GRUNDFOS

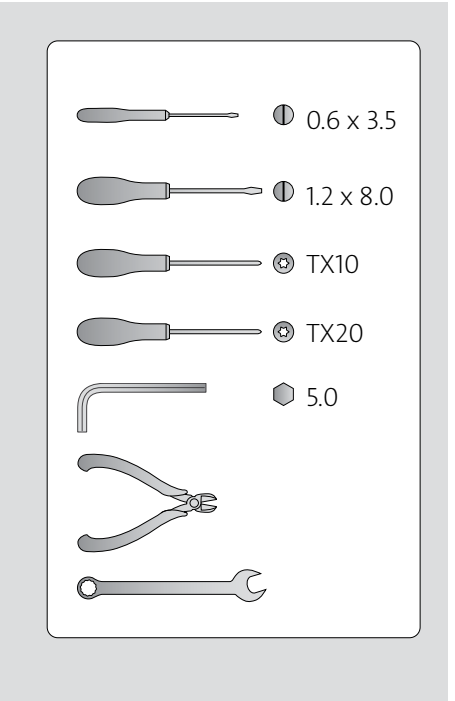
0.6 x 3.5
1.2 x 8.0
TX10
TX20
5.0

1
GRUNDFOS
MAGNA3
OK

2

3
GRUNDFOS
MAGNA3
OK

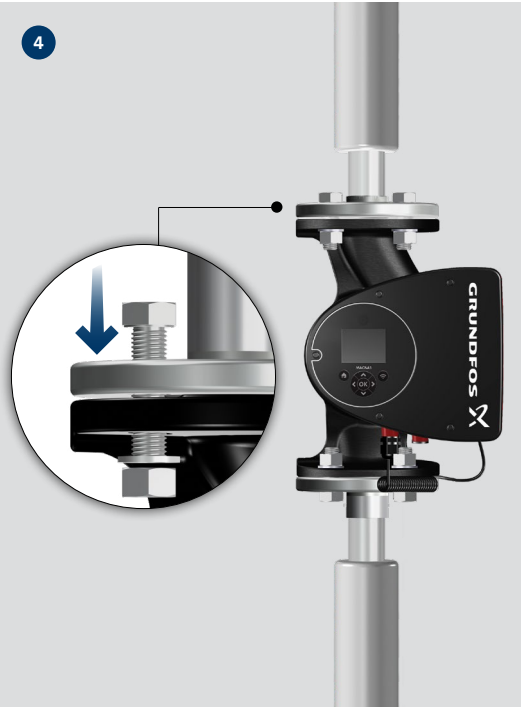
4
GRUNDFOS
MAGNA3
OK

GRUNDFOS

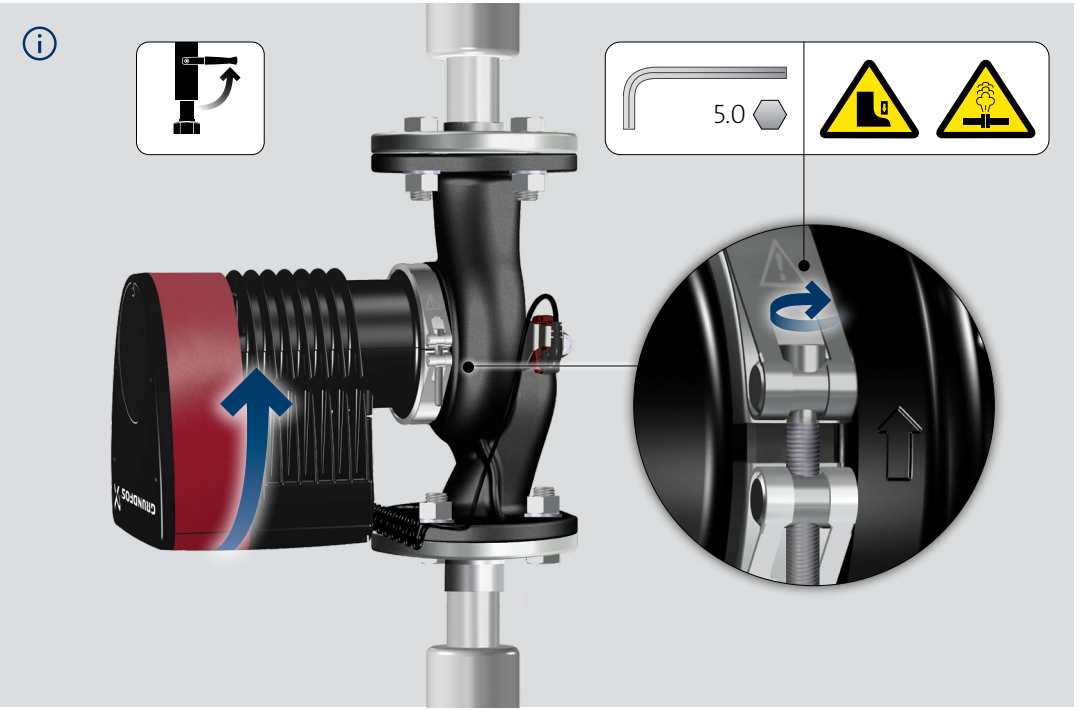
5.0

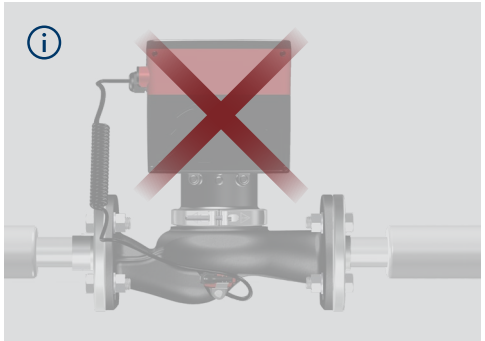

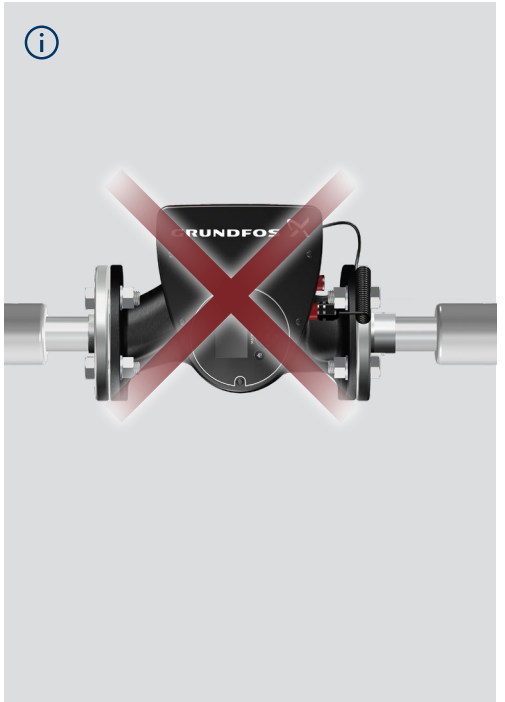
GRUNDFOS

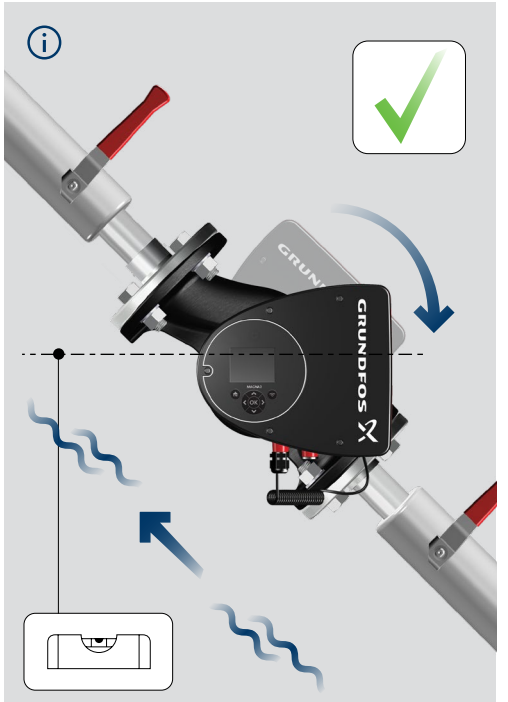
GRUNDFOS

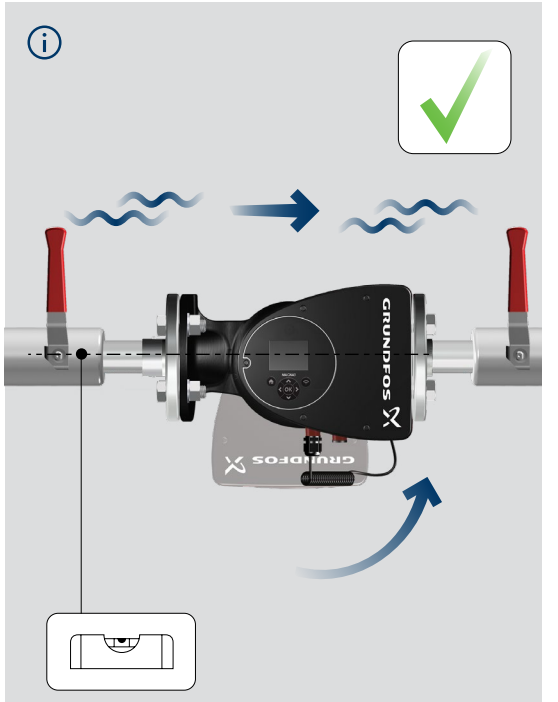
GRUNDFOS

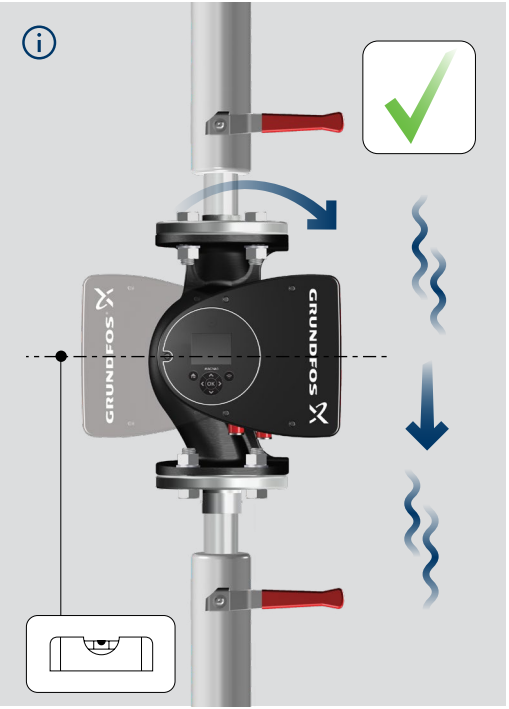
GRUNDFOS
GRUNDFOS

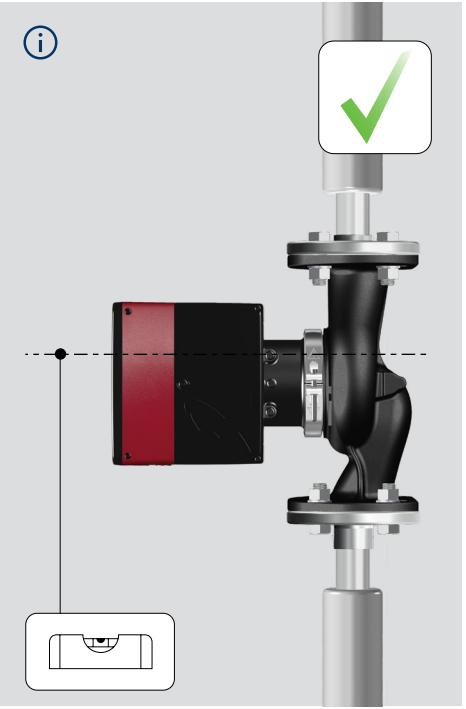

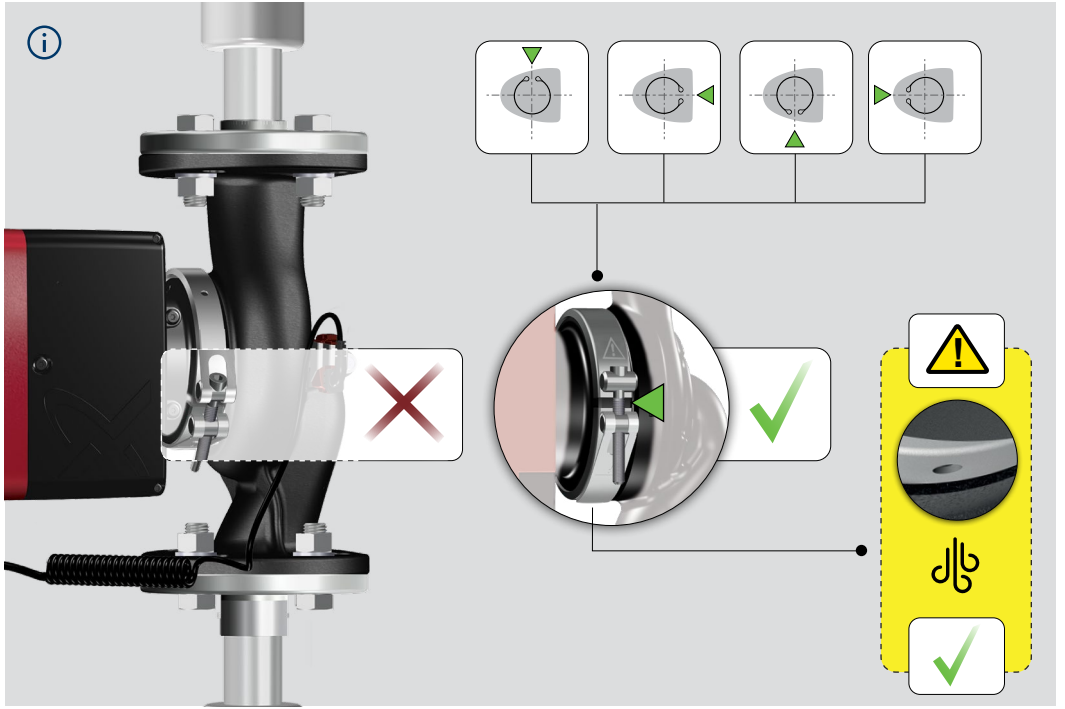

5.0
8 Nm

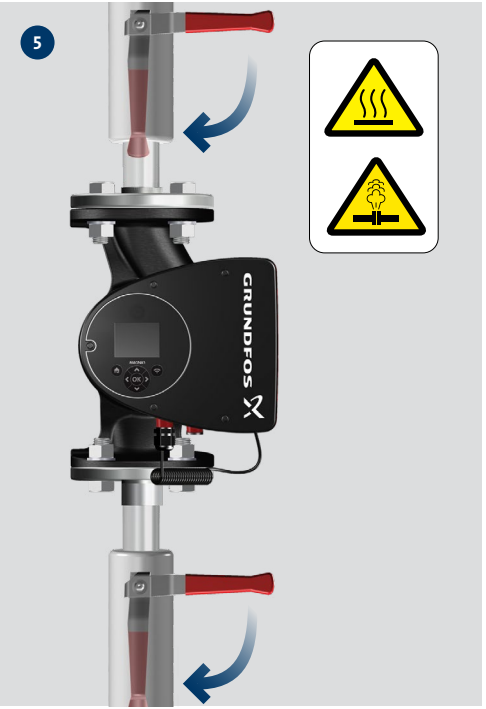
5
GRUNDFOS

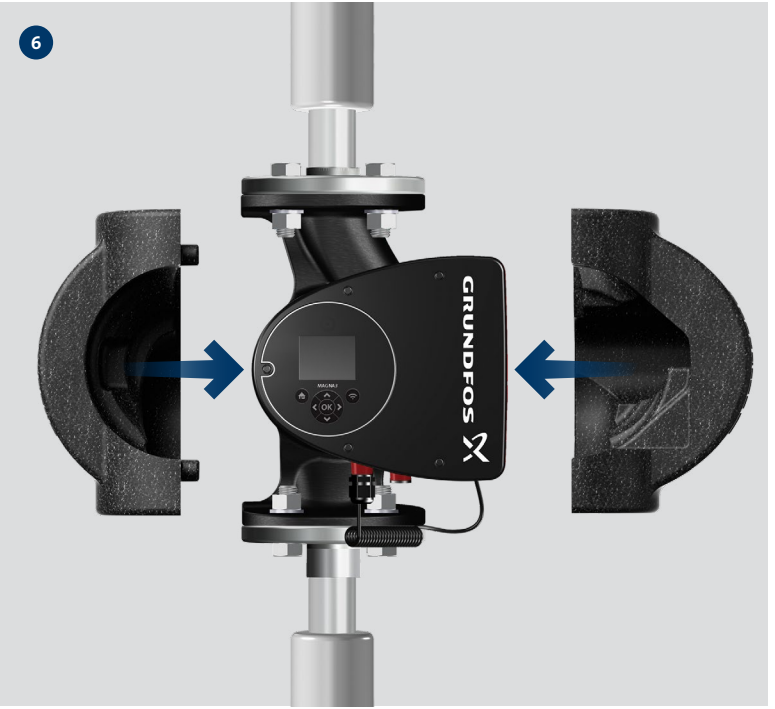
6
GRUNDFOS

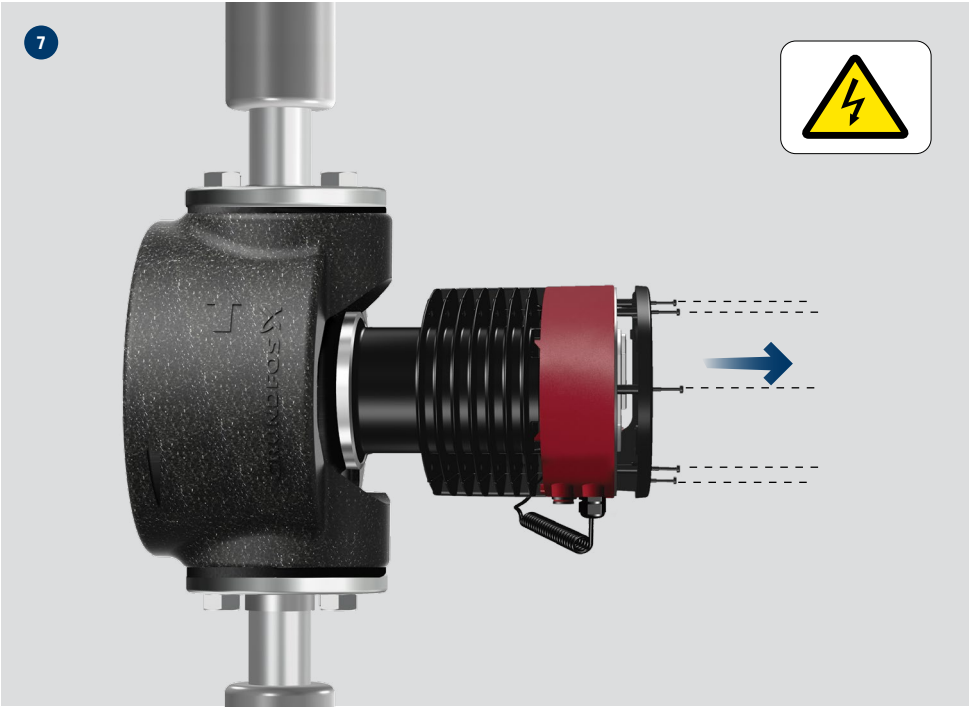
7

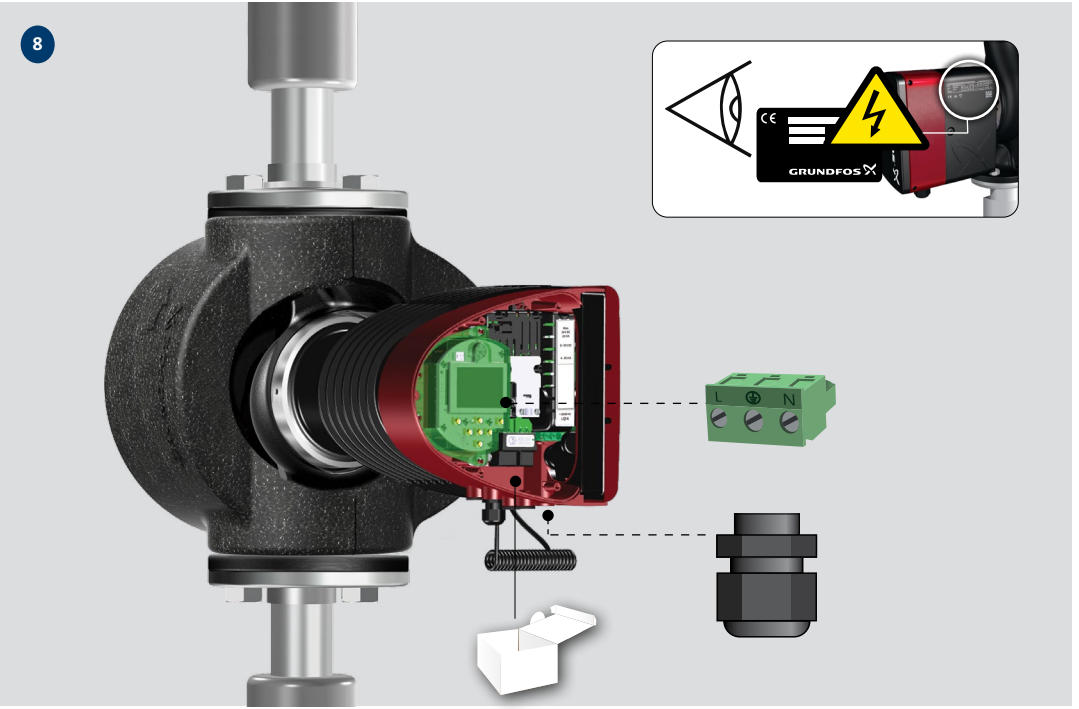
8
GRUNDFOS
L
N

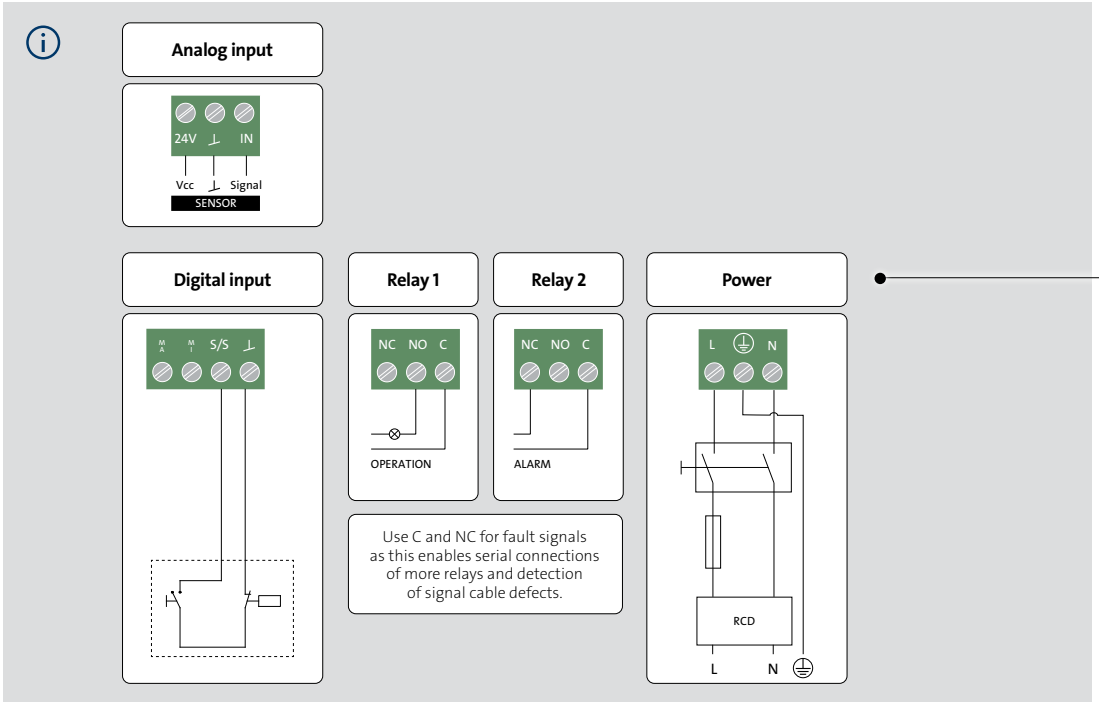
Analog input
24V
IN
Vcc
Signal
SENSOR
Digital input
S/S
Relay 1
NC NO C
OPERATION
Relay 2
NC NO C
ALARM
Use C and NC for fault signals as this enables serial connections of more relays and detection of signal cable defects.
Power
L
N
RCD
L
N

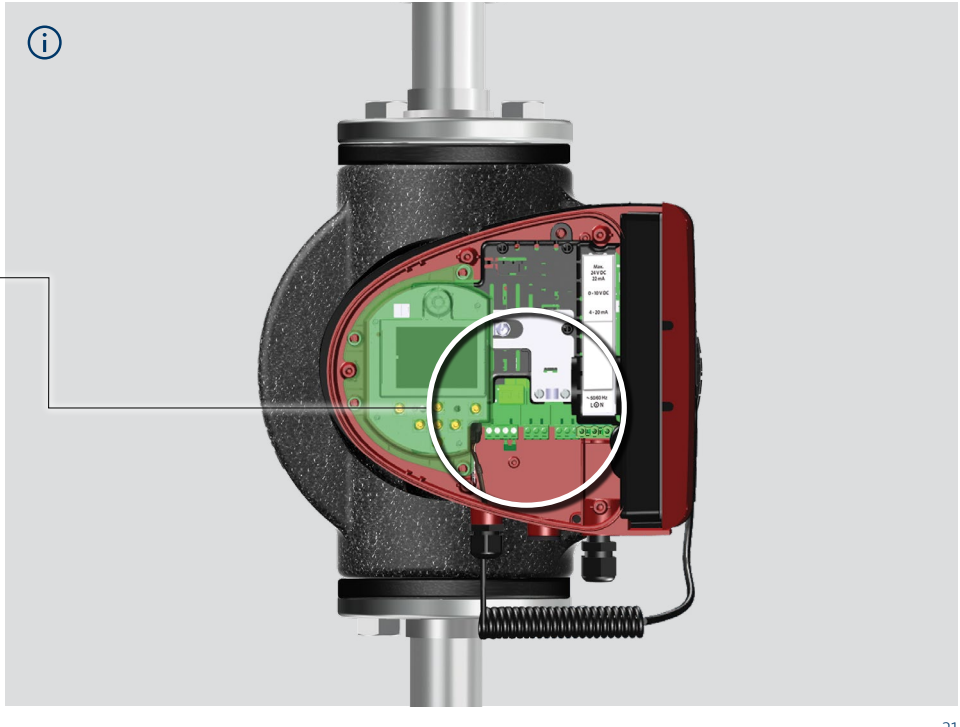

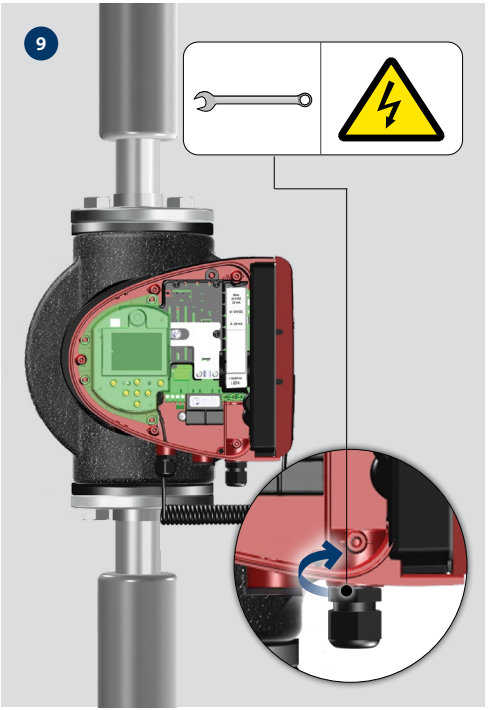
9

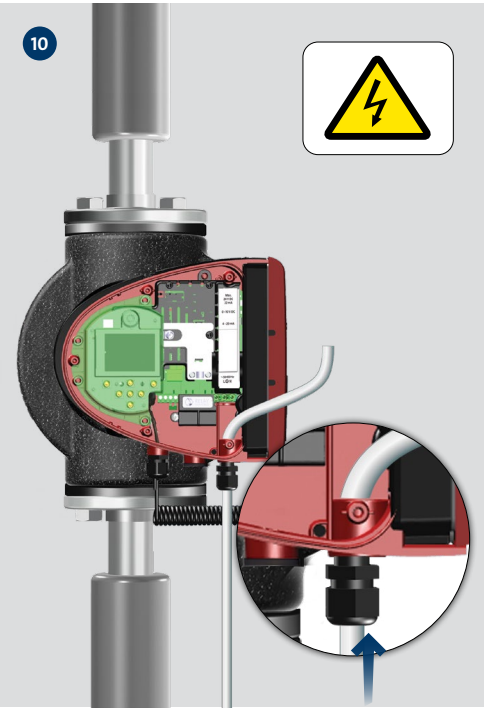
10

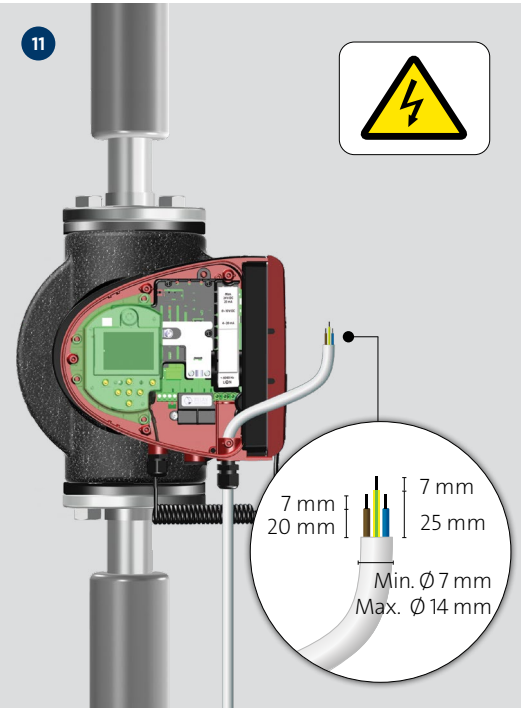
11
7 mm
20 mm
7 mm
25 mm
Min. Ø 7 mm
Max. Ø 14 mm

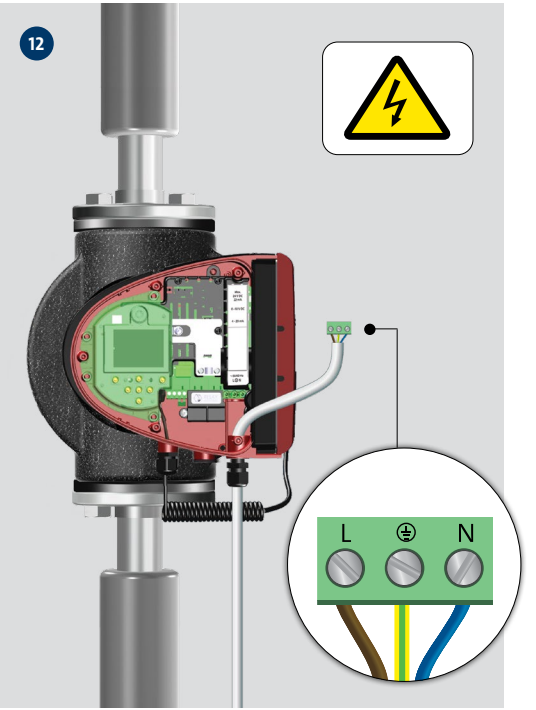
12
L
N

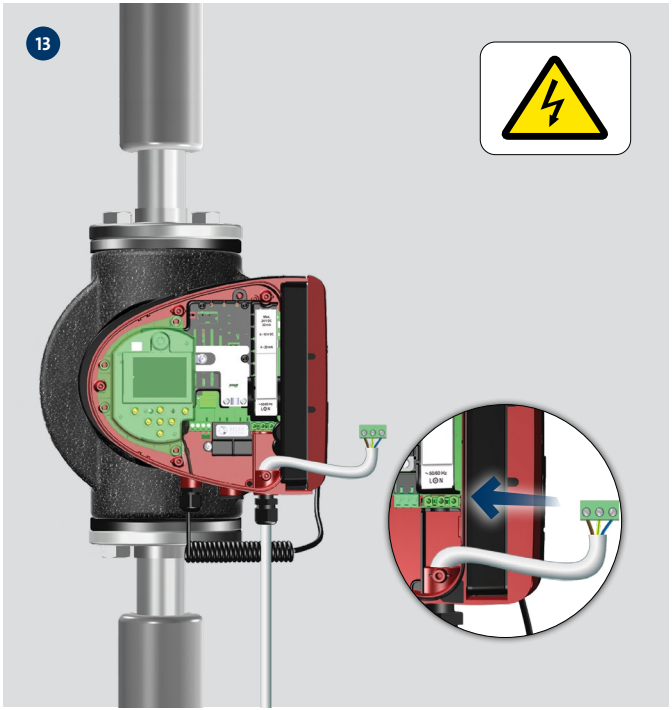
13

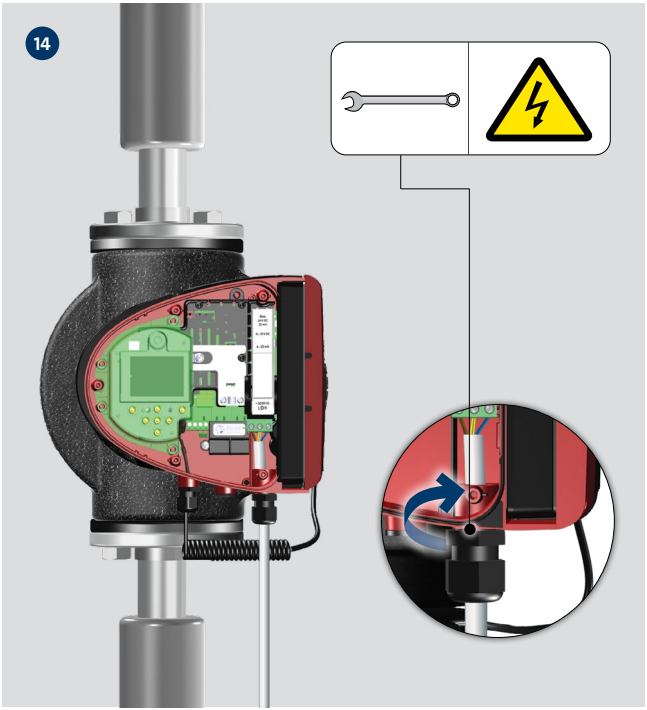
14

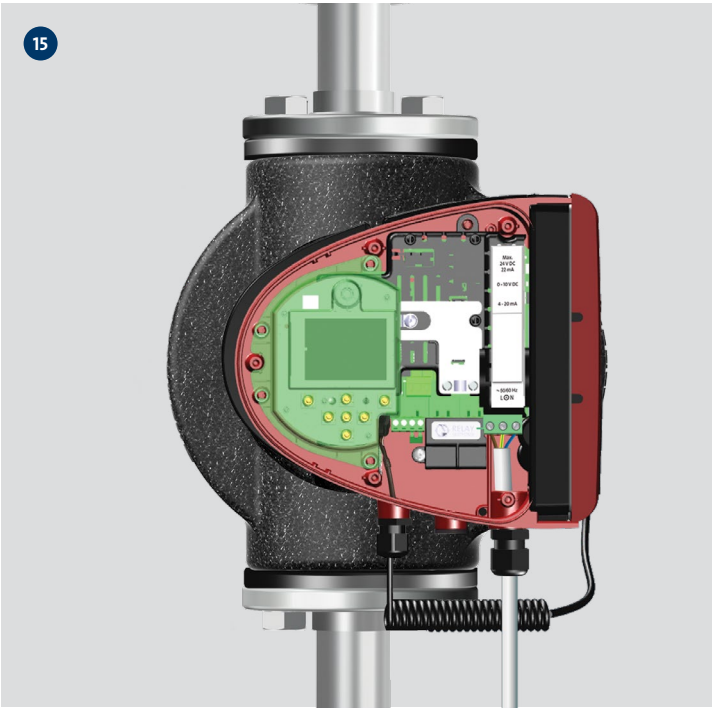
15

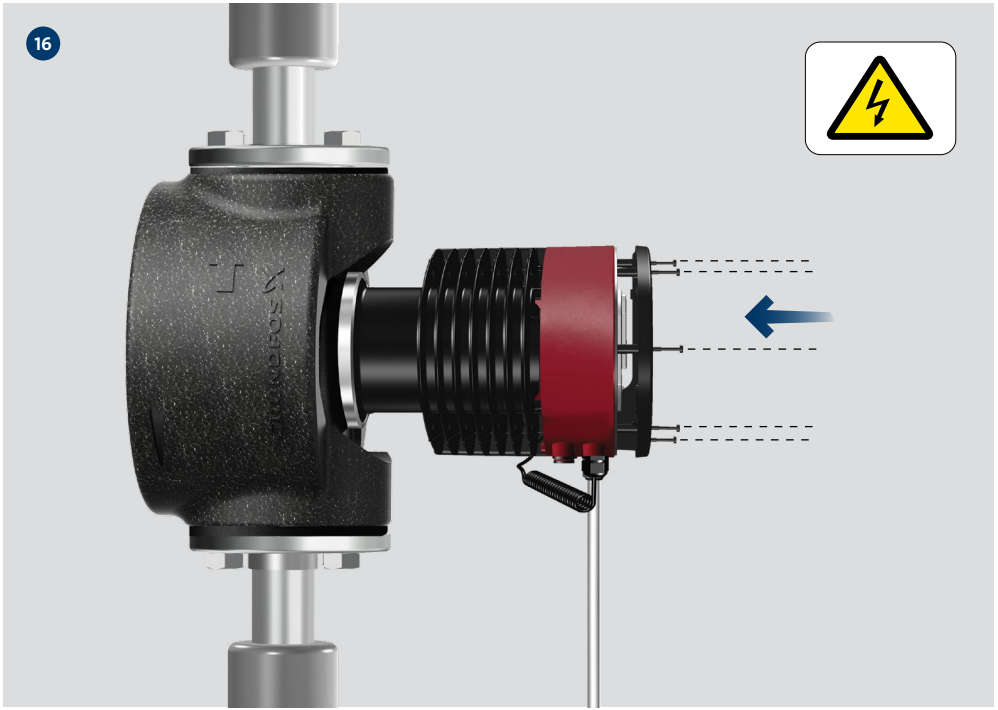
16

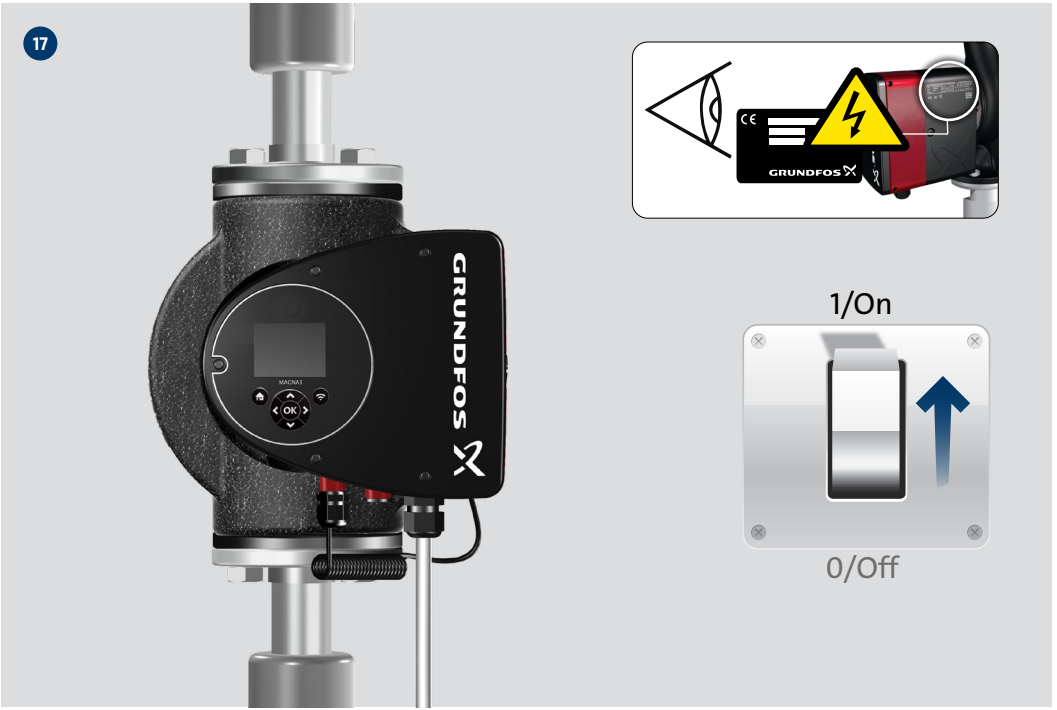
17
GRUNDFOS
GRUNDFOS
1/On
0/Off

18

Power cycle
Max. 4 starts
per 60 minutes

19

net.grundfos.com/qr/i/92662525

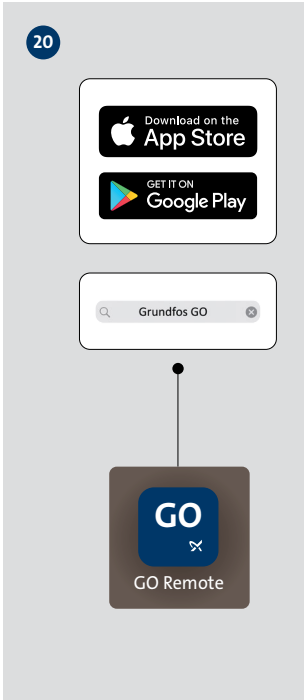
20
Download on the
App Store
GET IT ON
Google Play
Grundfos GO
GO
GO Remote

21
INSTALL
GO
GO Remote

22
Bluetooth = ON
GO
GO Remote
OPEN

23
GRUNDFOS
Select connect
Bluetooth
Radio
List
Connect
IR
Connect
Bluetooth
List
Connect

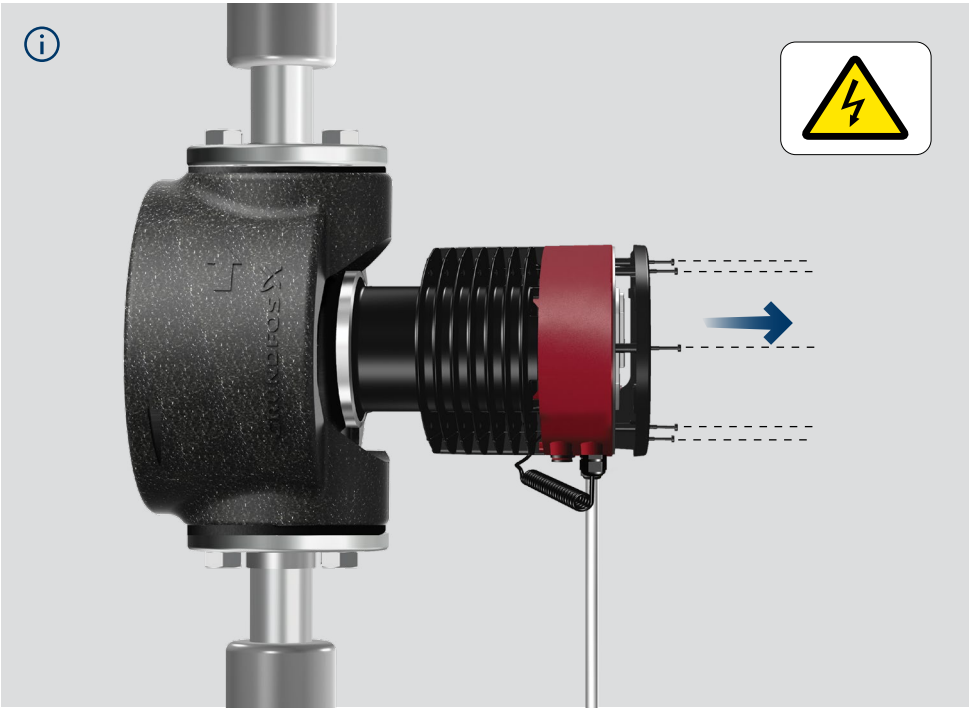

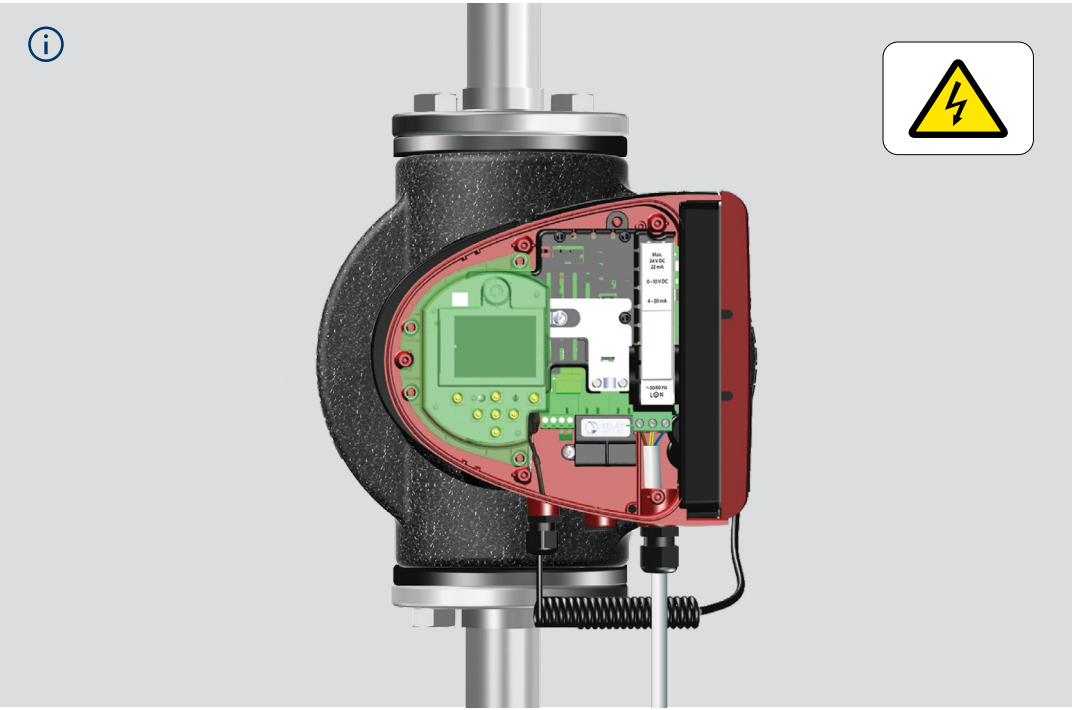

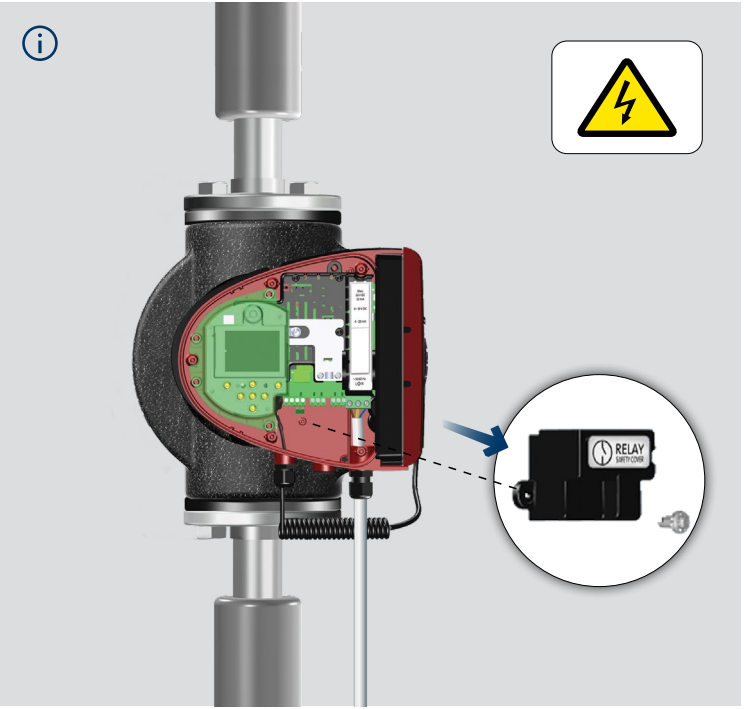
RELAY
SAFETY CONN

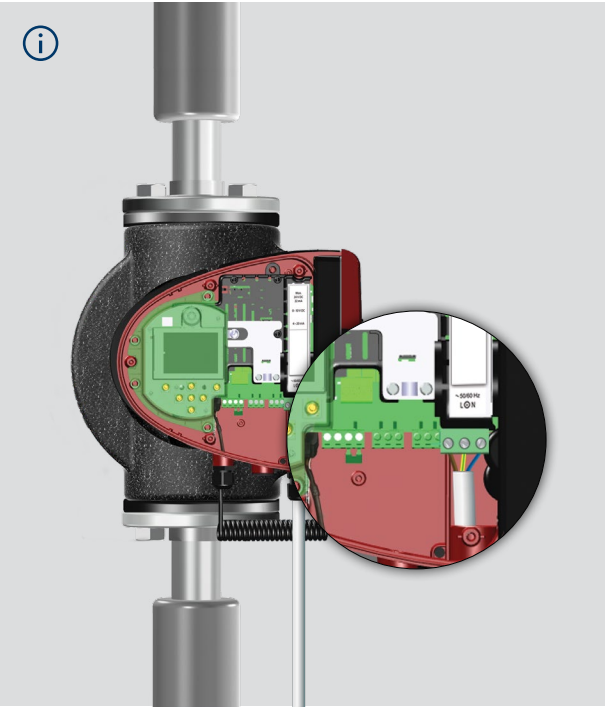
~50/60 Hz
LON

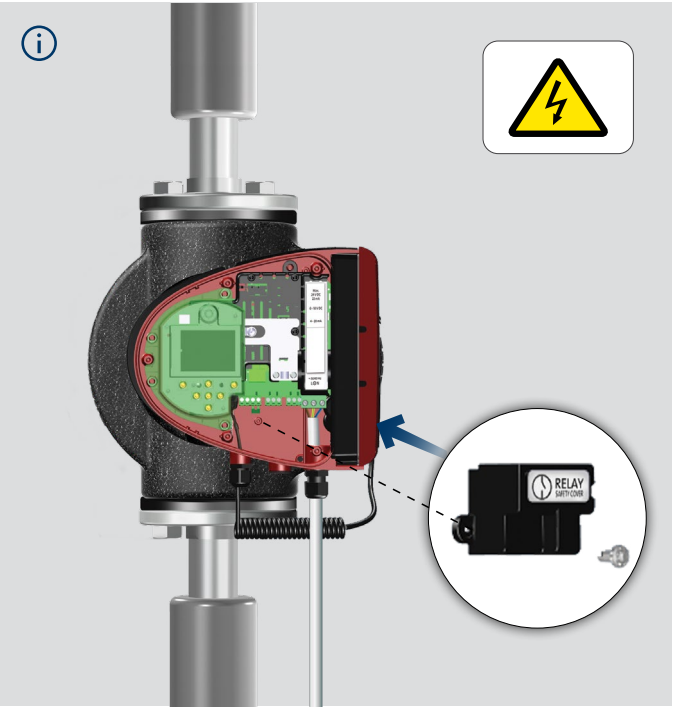
RELAY
SAFETY CONN

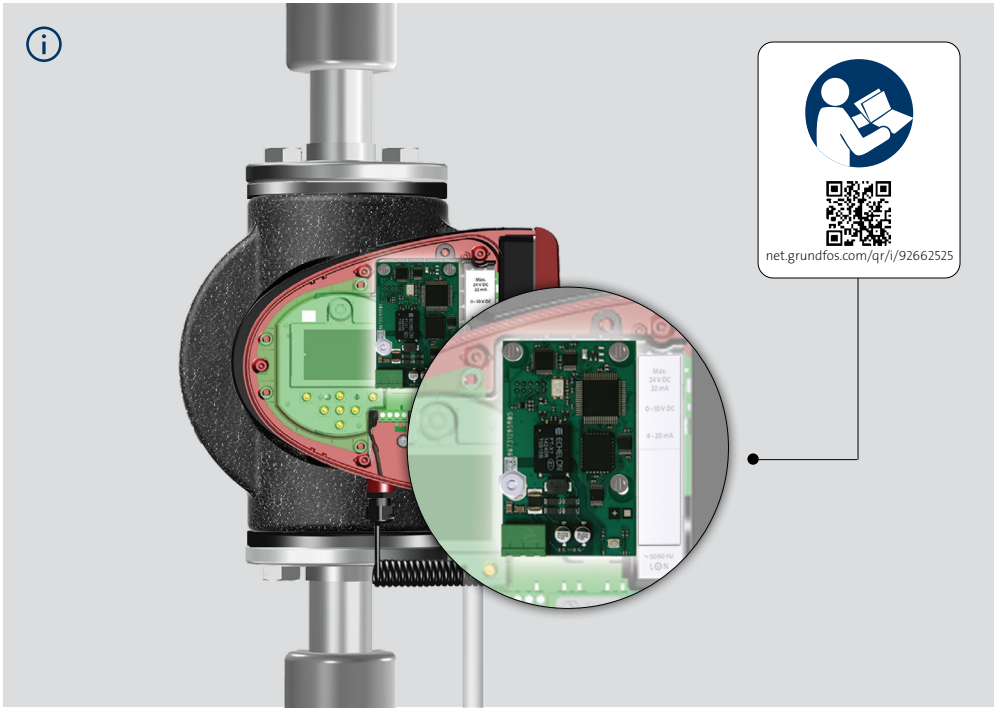
net.grundfos.com/qr/i/92662525

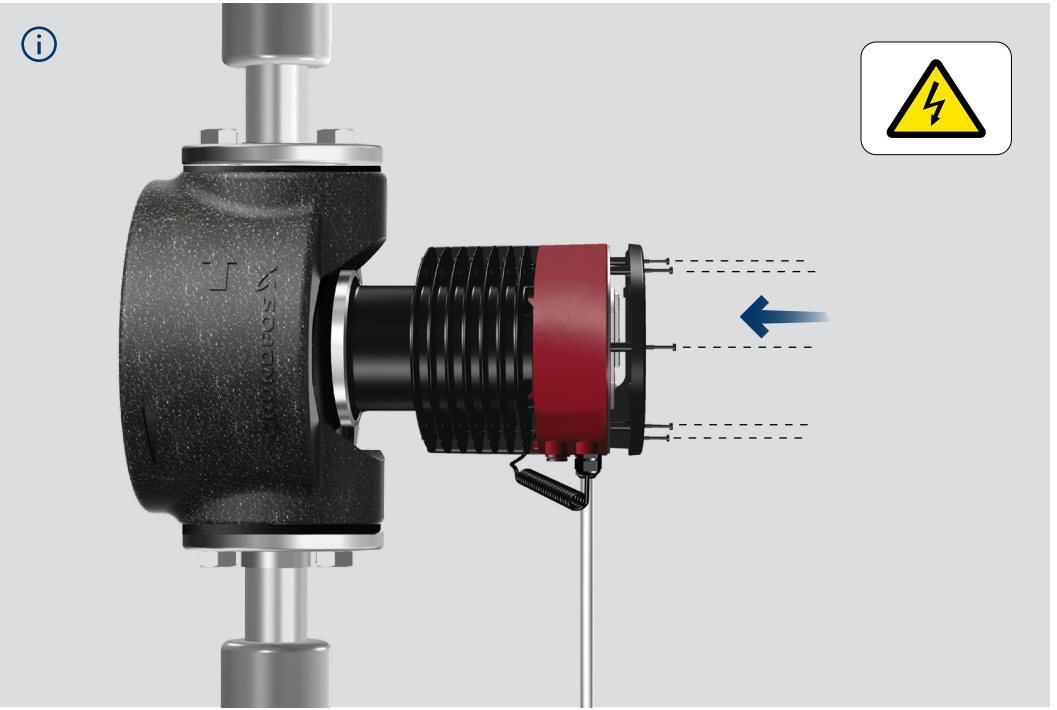

be think innovate

Installation date: _____

Installer:

_____

_____

_____

_____

92598577 09.2025	
ECM: 1433122	

GRUNDFOS Holding A/S
Poul Due Jensens Vej 7
DK-8850 Bjerringbro
Tel: +45 87 50 14 00
www.grundfos.com

Trademarks displayed in this material, including but not limited to Grundfos, the Grundfos logo and "be think innovate" are registered trademarks owned by The Grundfos Group. All rights reserved.

© 2025 Grundfos Holding A/S, all rights reserved.