Installation and operating instructions

SCALA1 System

GRUNDFOS

SCALA1 System

English (GB)

Installation and operating instructions 4

Original installation and operating instructions

Table of contents

1. General information 5
1.1 Hazard statements 5
1.2 Notes 5
1.3 Target group. 5

2. Product introduction 6
2.1 Product description 6
2.2 Pumped liquids 6

3. Mechanical installation 6
3.1 Wall installation 7
3.2 Installing the overflow connection 8
3.3 Connecting the tap water pipe 8
3.4 Connecting the rainwater inlet pipe 9
3.5 Connecting the outlet pipe 9
3.6 Installing the float switch 10

4. Starting up the product 12
4.1 Priming the product 12
4.2 Starting up the pump 12
4.3 Operation 12
4.4 Shaft seal run-in. 13

5. Control functions 13
5.1 Overflow alarm 13
5.2 Operating panel 14
5.3 Auto reset 15
5.4 Dry-running protection 16
5.5 Micro-leakage detection 16
5.6 Maximum runtime 16
5.7 Performance modes 17
5.8 Selecting the performance mode. 18

6. Fault finding 18
6.1 Grundfos Eye SCALA1 19
6.2 The pump does not start 20
6.3 The pump does not start 20
6.4 The pump is not running, and the indicator light for dry running and water shortage is on 20
6.5 The pump starts and stops too frequently . . 21
6.6 The pump does not stop 21
6.7 Insufficient pump performance 21
6.8 The pump is not running 22
6.9 The pump is not running, and the indicator light for exceeded maximum runtime is on 22
6.10 The pump is not running, and the indicator light for leakage in the system is on 22
6.11 The pump is not running and Grundfos Eye is flashing red 22
6.12 The pump is running and the motor shows a red indicator light 23
6.13 The pump cuts out during operation 23
6.14 Electric shock 23
6.15 Resetting fault indications 23

7. Maintenance 24
7.1 Cleaning the filter 24

8. Technical data 25
8.1 Operating conditions 25
8.2 Mechanical data. 26
8.3 Electrical data 26
8.4 Dimensions and weights 26

9. Disposing of the product 27
9.1 Disposing of hazardous or toxic materials . . 27

10. Document quality feedback 27

1. General information

This appliance can be used by children aged from 8 years and above and persons with reduced physical, sensory or mental capabilities or lack of experience and knowledge if they have been given supervision or instruction concerning use of the appliance in a safe way and understand the hazards involved.

Children shall not play with the appliance. Cleaning and user maintenance shall not be made by children without supervision.

Read this document before you install the product. Installation and operation must comply with local regulations and accepted codes of good practice.

1.1 Hazard statements

The symbols and hazard statements below may appear in Grundfos installation and operating instructions, safety instructions and service instructions.

DANGER

Indicates a hazardous situation which, if not avoided, will result in death or serious personal injury.

WARNING

Indicates a hazardous situation which, if not avoided, could result in death or serious personal injury.

CAUTION

Indicates a hazardous situation which, if not avoided, could result in minor or moderate personal injury.

The hazard statements are structured in the following way:

SIGNAL WORD

Description of the hazard

Consequence of ignoring the warning

- Action to avoid the hazard.

1.2 Notes

The symbols and notes below may appear in Grundfos installation and operating instructions, safety instructions and service instructions.

Observe these instructions for explosion-proof products.

A blue or gray circle with a white graphical symbol indicates that an action must be taken.

A red or gray circle with a diagonal bar, possibly with a black graphical symbol, indicates that an action must not be taken or must be stopped.

If these instructions are not observed, it may result in malfunction or damage to the equipment.

Tips and advice that make the work easier.

1.3 Target group

These installation and operating instructions are intended for professional as well as non-professional users.

2. Product introduction

2.1 Product description

The SCALA1 System is used to manage and distribute rain. The system is suitable for irrigation, water flushing of toilets and floor cleaning systems.

The system prioritises the use of rainwater over tap water. In case of insufficient rainwater in the tank, the control unit switches to tap water to ensure the necessary water flow at the tapping points. The system automatically switches between the rainwater tank and the tap water tank by means of a three-way valve installed on the pump inlet port. The water supplied by the system is not potable.

2.2 Pumped liquids

DANGER
Explosion risk
Death or serious personal injury

- Do not use the product for flammable liquids such as diesel oil, petrol or similar liquids. The product must only be used for water.

WARNING
Electric shock
Death or serious personal injury

- Do not use the product for aggressive liquids. The product must only be used for water.

WARNING
Toxic material
Death or serious personal injury

- Do not use the product for toxic liquids. The product must only be used for water.

If the water contains sand, gravel or other debris, there is a risk of pump blockage and pump damage. Install a filter on the inlet side or apply a floating strainer to protect the pump.

The product is suitable for pumping clean, thin, non-aggressive and non-explosive liquids without solid particles or fibers.

The product is designed for fresh water with a maximum chloride content of 50 ppm and a free chlorine content below 0.2 ppm.

Examples of liquids:

- clean water
- rainwater.

3. Mechanical installation

WARNING
Electric shock
Death or serious personal injury

- Switch off the power supply before you start any work on the product. Make sure that the power supply cannot be switched on accidentally.

WARNING
Electric shock
Death or serious personal injury

- Mount the product horizontally to avoid condensation in the electrical insulation inside the control box.

WARNING
Chemical hazard
Death or serious personal injury

- Before the pump is used for supplying drinking water, flush the pump thoroughly with clean water.

WARNING
Biological hazard
Death or serious personal injury

- Before the pump is used for supplying drinking water, flush the pump thoroughly with clean water.

3.1 Wall installation

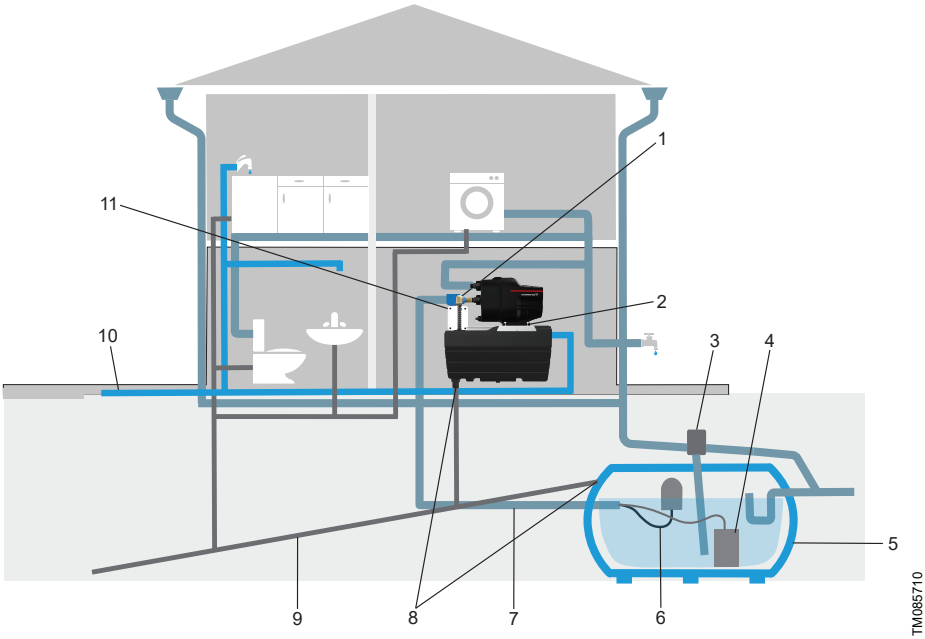

Pos.	Description
1	Three-way valve
2	SCALA1 System
3	Filter
4	Optional feed pump (for example SBA 3-35)
5	Rainwater tank
6	Inlet filter/float switch
7	Inlet pipe
8	Tank overflow
9	Sewer line
10	Mains water supply
11	Control box

Before installing the product, ensure that the sewage system is at least 1 metre below where SCALA1 System is to be installed. The following requirements must also be met:

- The room must have an outlet pipe that is connected to the sewage system.
- The location must be dry and protected from rain.
- Flat wall, in horizontal position.
- Minimum distance from the ceiling: 50 cm.

! We recommend installing a feed pump with a maximum system pressure of 8 bar if the distance between the rainwater tank and SCALA1 System is too long.

3.1.1 Mounting the product

The security screws are essential to ensure the stability of the system and the safety of persons.

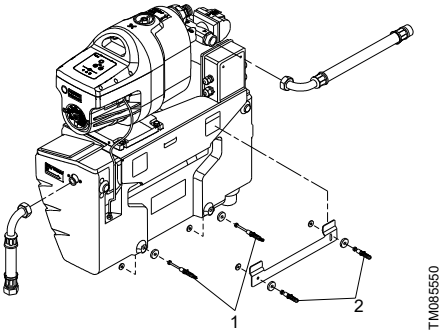

SCALA1 system

Pos.	Description
1	Mounting screws for the bracket
2	Security screws

Follow the steps below to mount the SCALA1 system:

1. Install the mounting bracket on the wall.
   Make sure it is horizontal using a spirit level, and mark the positions of the holes.
2. Drill the mounting holes using a D.10 drill bit.
3. Fix the bracket to the wall, making sure that it is level and securely attached to the wall.
4. Install the SCALA1 system as shown above.
5. Mount the security screws.
6. Place two of the supplied vibration dampers between the bracket and the wall, and place the remaining two between the tank and the wall to reduce the transfer of vibrations to the wall.

3.2 Installing the overflow connection

To install the overflow connection, follow the steps below:

1. Connect the DN 50 outlet pipe to the overflow pipe of the system.
2. Make sure that the outlet pipe slopes sufficiently to guarantee correct drainage.
3. Connect the outlet pipe to the sewage system.
4. If the outlet pipe does not slope sufficiently, install a pump system.

3.3 Connecting the tap water pipe

When tightening the pipe, make sure the tap water hose does not turn.

The float switch that regulates the backflow of the tap water is designed to operate at a maximum pressure of 4 bar and a flow rate of more than 10 L/min. If the mains water pressure exceeds this value, install a pressure regulator upstream of the float and add a mesh filter to protect the pressure regulator from any debris that could compromise its operation. Excessive pressure in the pipes of the tap water network can lead to a leak or a malfunctioning float switch.

We recommend installing an on/off tap upstream of the float switch to cut off the mains water supply in case of breakage or malfunction so that maintenance can be carried out safely.

1. Connect the tap water pipe to the 3/4 inch drain on the right side of the tank.

3.4 Connecting the rainwater inlet pipe

The inlet pipe must have an internal diameter of at least 25 mm, and it must always slope towards the tank.

We recommend installing a float switch fitted with an inlet strainer and a non-return valve in the rainwater tank.

1. Install the system as close to the rainwater tank as possible.
   a. Never exceed a suction lift of 6 metres for optimum performance of the pump. The total of the suction distance and the suction loss depends on the length of the inlet pipe.
   b. The inlet point must always ensure the suction of clean water. Use a suction kit, and install it as shown here.

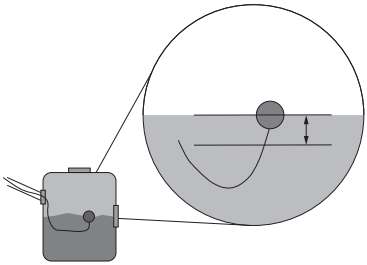

Installation of the suction kit

2. Connect the inlet pipe to the connecting piece.
3. Install a feed pump if the maximum pipe length according to the suction lift is outside the curve. See the graph below.

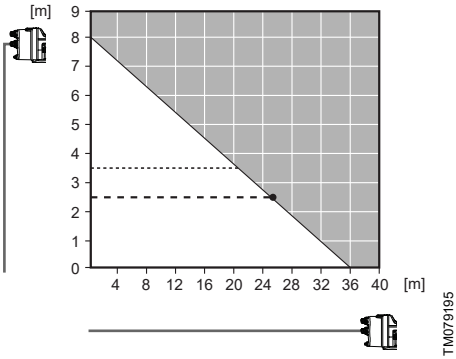

Maximum inlet pipe length (horizontal axis) according to the suction lift (vertical axis)

3.5 Connecting the outlet pipe

Install an on/off tap upstream of the float switch to cut off the mains water supply in case of breakage or malfunction so that maintenance can be carried out safely.

1. Connect the outlet pipe to the 1-inch connector with the supplied hose as shown below.
2. Fix the pipe to the wall with a suitable bracket.

3.6 Installing the float switch

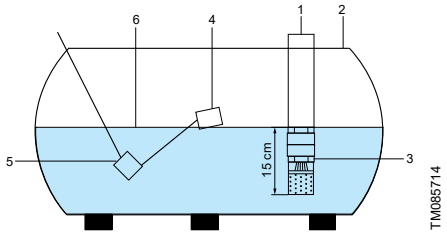

Installing the float switch

Pos.	Description
1	Inlet pipe
2	Rainwater tank
3	Strainer
4	Float switch
5	Counterweight
6	Water level

The float switch must be installed in the rainwater tank. Proceed as follows:

1. Place the float switch as shown in the illustration above.
2. Adjust the counterweight so that there is a distance of at least 20 cm between the float switch and the counterweight.
3. After adjusting the float switch, make sure that the cable is protected along its entire length:
   a. Place the cable in a casing tube.
   b. Reconnect the float switch cable at the control box.

To prevent the inlet strainer from filling with air, the float switch must stop the system when the water level falls to 15 cm above the inlet strainer.

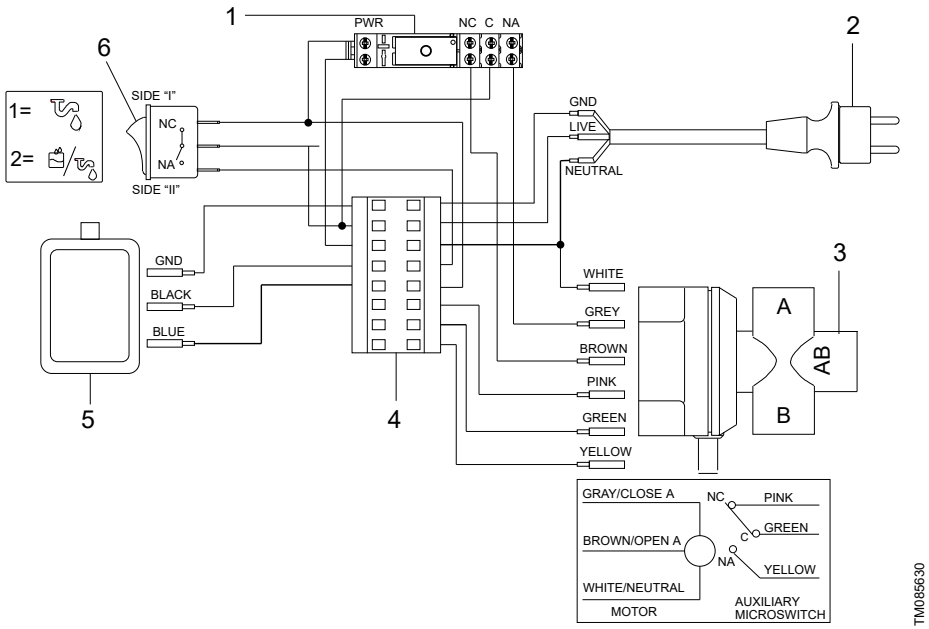

Electrical diagram

Pos.	Description
1	Relay
2	Power input
3	Three-way valve
4	Terminal
5	Float switch
6	Water source control switch

4. Starting up the product

Do not turn on the power supply until the pump has been filled with liquid.

4.1 Priming the product

1. Unscrew the priming plug and pour at least 1.7 litres (0.45 gallons) of water into the pump housing.
2. Screw the priming plug on again.

Example:

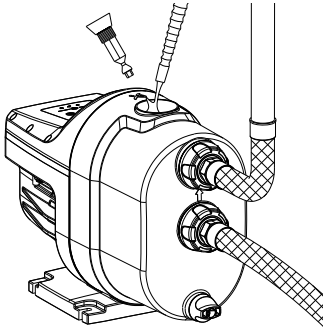

TM075342

Priming the pump

If the suction depth exceeds 6 m (20 ft), it may be necessary to prime the pump more than once.

Always tighten priming and drain plugs by hand.

4.2 Starting up the pump

After installing and priming, follow the following steps to start up the pump.

1. Prime the pump according to the priming instructions.
2. Open all isolating valves.
3. Open the tapping point that is the highest or furthest away from the pump to let out air trapped in the system.
4. Turn on the pump's power supply. All the symbols on the operating panel will light up briefly. The **Stop** icon remains on.
5. Press the **Start/Stop** button to start the pump. If there is a suction lift, it may take up to five minutes before the pump delivers water depending on the length and diameter of the inlet pipe.
6. When the water flows through the tapping point without air, close the tapping point. The pump will stop after approx. 10 seconds.
7. The startup is now completed, and the pump is ready for operation.

4.3 Operation

4.3.1 Normal operation

When water is consumed in the water supply system, the pump starts if the starting conditions of the pump are fulfilled. This happens, for example, when a tap is opened, making the pressure in the system drop.

The pump stops when the consumption stops, that is when the tap is closed.

Open pipe systems

When using the pump in an open pipe system, it must be ensured that the water can be diverted to prevent potential flooding or property damage in case of an accidental startup.

4.3.1.1 Starting and stopping conditions

To ensure optimal performance, the cut-in pressure is set by Grundfos. It is therefore not possible to adjust the cut-in pressure.

Starting conditions

The pump starts when at least one of the following conditions is fulfilled:

- The flow is higher than Qmin (1.5 l/min).
- The pressure is lower than pstart.

Stopping conditions

The pump stops with a time delay of 10 seconds when both of the following conditions are fulfilled:

- The flow is lower than Qmin (1.5 l/min).
- The pressure is higher than pstart.

The pstart values are shown in Technical data.

4.4 Shaft seal run-in

The shaft seal faces are lubricated by the pumped liquid. A slight leakage from the shaft seal of up to 10 ml per day or 8 to 10 drops per hour may occur. Under normal conditions, the leaking liquid will evaporate. As a result, no leakage will be detected.

When the pump is started for the first time, or when the shaft seal has been replaced, a certain run-in period is required before the leakage is reduced to an acceptable level. The time required for this depends on the operating conditions, that is, every time the operating conditions change, a new run-in period will be started.

Leaking liquid will drain through the drain holes in the motor flange.

Install the product in such a way that leakage cannot cause undesirable collateral damage.

5. Control functions

5.1 Overflow alarm

If the refill valve starts to leak, causing loss of water from the mains through the inner overflow drain, an overflow alarm will be triggered. The pump is stopped and two opposite yellow indicator lights will flash simultaneously on Grundfos Eye. The alarm blocks the system without any audible warning.

The alarm must be reset by switching the button on the back of the pump from **1-Alarm D on** to **0-Alarm D off**. See the figure below.

TM085720

Related information

6.8 The pump is not running

5.2 Operating panel

TM075407

Symbol	Description
	Grundfos Eye: The indicator light shows the operating status of the product.
	Start/Stop: Press the button to make the product mandatory-ready for operation or to start and stop the product. **Start**: If you press the button when the product is stopped, the product starts if no other functions with higher priority have been enabled. **Stop**: If you press the button when the product is running, the product always stops.
Stop	The pump is stopped. The stop icon will light up on the display.
	Bluetooth connect button enables communication with Grundfos GO. The connection indicator light will light up when the connection to Grundfos GO is established.
Reset	Reset the pump alarms.

The following alarm lights indicate an issue with installation:

Symbol	Description
	Leakage in the system.
	Dry running or water shortage.
	The maximum runtime has been exceeded.

5.3 Auto reset

This function allows the pump to automatically check if the operating conditions are back to normal. If the operating conditions are back to normal, the alarm indication will be reset automatically.

The factory setting is on.

The **Auto reset** function works as follows:

Alarm	Auto-reset action	Configurable	Default
Dry running	The pump will attempt four restarts at 25-minute intervals. If not successful, this cycle will be repeated after 12 hours. In twin configuration Duty/Assist, there is no reset if only one pump is in dry-running alarm. If both pumps are in dry running, the reset will be staggered. In twin configuration Duty/Standby, the pump will attempt to restart immediately independent of the second pump.	Yes	On
Micro-leakage detection (anti-cycling)	This function will attempt to reset after 12 hours, and the pump will return to normal operation.	Yes	On
Max. runtime	None	Fixed disabled	
Missed twin pump	Auto reset is performed by the system when communication is reestablished.	Fixed enabled	

5.4 Dry-running protection

If a dry-running alarm has been activated, the cause should be identified before the pump is restarted to prevent damage to the pump.

The unit incorporates dry-running protection that automatically stops the pump in case of dry-running. The dry-running protection functions differently during priming and operation.

5.4.1 Dry-running during priming

If the unit does not detect pressure and flow within 5 minutes after it has been connected to a power supply, and the pump has started, the dry-running alarm is activated.

5.4.2 Dry-running during operation

If the unit does not detect pressure and flow within 40 seconds during normal operation, the dry-running alarm is activated.

5.4.3 Resetting of dry-running alarm

If the dry-running alarm has been activated, the pump can be restarted manually by pressing [Reset]. If the unit does not detect pressure and flow within 40 seconds after restarting, the dry-running alarm is reactivated.

This protection is always **ON.**

Dry-running or water shortage.

5.5 Micro-leakage detection

Note: This function was previously called anti-cycling. It has been renamed to micro-leakage detection.

If there is a minor leakage in the system, or a tap has not been closed entirely, the unit will start and stop the pump periodically. To avoid cycling, the micro-leakage detection of the unit will stop the pump and indicate an alarm. The micro-leakage detection can be configurated in Grundfos GO.

Off

If the pump starts 40 times in a fixed pattern, an indicator light will signal cycling. The pump will remain in normal operation.

On

If the pump starts and stops in a fixed pattern, there is a leakage in the system. The pump stops, Grundfos Eye is flashing red and an indicator light is on.

The factory setting for this function is on.

Leakage in the system.

Related information

6.5 The pump starts and stops too frequently

5.6 Maximum runtime

This function is a timer that can turn off the pump if it runs continuously for a certain amount of time. This time period can be adjusted via Grundfos GO.

Off

The pump will run depending on the operating conditions disregarding the continuous operation.

On

The pump will stop after the specified period of continuous operation, and it will show the alarm **Maximum runtime exceeded**. This alarm will always need to be reset manually.

The factory setting for this function is off.

Maximum runtime exceeded.

5.7 Performance modes

Different performance modes can be selected for SCALA1. Selecting the correct mode is dependent on the installation.

There are 3 performance modes for SCALA1:

- self-priming
- air handling
- positive inlet.

The default mode is self-priming, which will be the desired mode for most installations.

Performance mode	Description	Benefits
Self-priming	The self-priming valve is fully opened.	Best performance and lowest noise level in suction applications.
Air handling [1)]	When there is air in the installations, it can accumulate in the hydraulics. Partially closing the self-priming valve can provide assistance.	Improves the pump's capability to handle air in the water.
Positive inlet	If the installation has a positive inlet pressure, the pump is always primed, and the self-priming valve can be fully closed.	Removes sound associated with self-priming valve movement in installations with positive inlet pressure.

1) This performance mode will result in some performance loss and a slight increase in noise level. Refer to technical data for more information.

5.8 Selecting the performance mode

If the performance mode needs to be changed from the default setting, follow these steps:

1. Remove the pump cover.
   a. Unscrew and remove the priming plug from the pump.
   b. Loosen and remove the inlet and outlet connections from the pump.
   c. Loosen and pull away the pump cover to remove it from the pump.

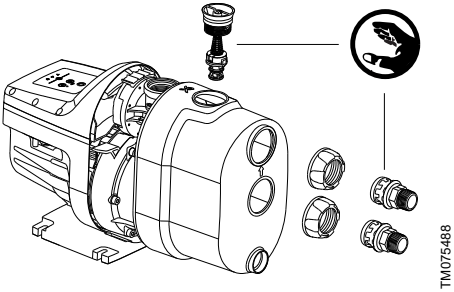

Remove the pump cover

2. Locate the performance mode knob.
3. Using a size 10 hexagon key, turn the knob to the desired selection.

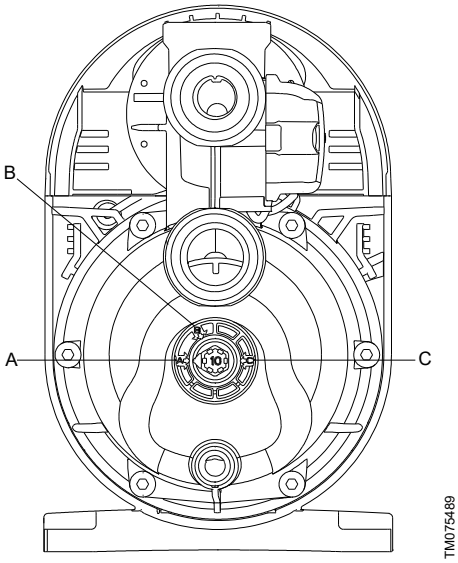

Turn the knob to select performance mode

Pos.	Description
A	Self-priming
B	Air handling
C	Positive inlet

4. Return the pump cover and reconnect the priming plug and connections.

6. Fault finding

CAUTION
Hot surface
Minor or moderate personal injury
- Do not run the pump continuously with a closed inlet or outlet valve.

CAUTION
Hot or cold liquid
Minor or moderate personal injury
- Make sure that escaping hot or cold liquid does not cause injury to persons or damage to the equipment.

6.1 Grundfos Eye SCALA1

Grundfos Eye indicates the operating conditions of the motor on the motor operating panel.

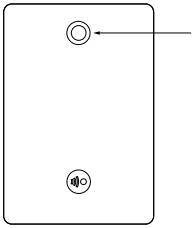

TM085776

Grundfos Eye indicator light

Grundfos Eye	Cause	Remedy
	No lights are on.	**Power off** The motor is not running.
	Two opposite green indicator lights are permanently on.	**Power on** The motor is not running.
	Two opposite green indicator lights are rotating.	**Power on** The motor is running. The indicator lights are rotating in the direction of rotation of the motor when seen from the non-drive end.
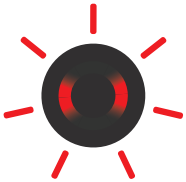	Two opposite red indicator lights are flashing simultaneously.	**Alarm** The motor has stopped.
	Two opposite yellow lights are permanently on.	The pump was stopped by: • external input • calendar function • twin communication failure (only SCALA1).
	Two yellow and two green lights are permanently on.	The pump is performing a self-test.

6.2 The pump does not start

Grundfos Eye: No lights are on.	TM053827

Cause	Remedy
The fuses in the electrical installation have blown.	• Replace the fuses if they are blown. • Check the electrical installation.
The earth leakage circuit breaker or the voltage-operated circuit breaker has tripped.	• Reset the circuit breaker.
No power supply.	1. Switch on the power supply. 2. Check for blown fuses in the electrical installation. 3. Check the cables and cable connections for defects and loose connections. 4. Contact the power supply authorities.

6.3 The pump does not start

Grundfos Eye: Two opposite green indicator lights are permanently on.	TM053831

Cause	Remedy
The difference between the SCALA1 unit and the tapping point is too large.	• Adjust the installation or select a SCALA1 unit with a higher head.

6.4 The pump is not running, and the indicator light for dry running and water shortage is on

Grundfos Eye: Two opposite red indicator lights are flashing simultaneously.	TM053839
The indicator light for dry running and water shortage is on.	TM074900

Cause	Remedy
Dry running or water shortage.	• Check the water source, and prime the pump.
Impurities are blocking the inlet pipe.	• Clean the inlet pipe.
The foot or non-return valve is blocked in a closed position.	• Clean, repair or replace the foot or non-return valve.
Leakage in the inlet pipe.	• Repair the inlet pipe.
Air in the inlet pipe or the pump.	• Prime the inlet pipe and the pump. Check the inlet conditions of the pump.

6.5 The pump starts and stops too frequently

Grundfos Eye:

Two opposite green indicator lights are rotating.

TM053829

Cause	Remedy
Leakage in the inlet pipe or air in the water.	• Restore the water supply or repair the inlet pipe.
A tap has not been closed entirely after use.	• Check that all taps have been closed.
Minor leakage in the system.	• Check the system for leakages.

Related information

5.5 Micro-leakage detection

6.6 The pump does not stop

Grundfos Eye:

Two opposite green indicator lights are rotating.

TM053829

Cause	Remedy
The pump cannot deliver the necessary discharge pressure.	• Replace the pump.
The existing pipes are leaking or defective.	• Repair the pipes.
The non-return valve is blocked or missing.	• Clean the valve or fit a non-return valve.

6.7 Insufficient pump performance

Grundfos Eye:

Two opposite green indicator lights are rotating.

TM053829

Cause	Remedy
The pump inlet pressure is too low.	• Check the pump inlet conditions.
The pump is undersized.	• Replace the pump with a larger pump.
Inlet pipe, inlet strainer or pump are partially blocked by impurities.	• Clean the inlet pipe or the pump.
Leakage in the inlet pipe.	• Repair the inlet pipe.
Air in the inlet pipe or the pump.	• Prime the inlet pipe and the pump. Check the pump inlet conditions.

6.8 The pump is not running

The pump has been stopped by external input or calendar function.

Grundfos Eye: Two opposite yellow lights are permanently on.	TM075021

Cause	Remedy
The water level has exceeded its maximum level and triggered an overflow alarm.	• Check the water level in the tank, and reset the pump manually by switching the button on the back of the pump from **1-Alarm D on** to **0-Alarm D off**. • Determine the root cause of the alarm. • Switch the button on the back of the pump to **1-Alarm D on** to return to normal operation when the issue has been resolved.

Related information

5.1 Overflow alarm

6.9 The pump is not running, and the indicator light for exceeded maximum runtime is on

Grundfos Eye: Two opposite red indicator lights are flashing simultaneously.	TM053839
The indicator light for exceeded maximum runtime is on.	TM074902

Cause	Remedy
The pump has been running for a long time and the maximum runtime has been exceeded.	• Check the installation for leakage and reset the alarm.

6.10 The pump is not running, and the indicator light for leakage in the system is on

Grundfos Eye: Two opposite red indicator lights are flashing simultaneously.	TM053839
The leakage indicator light is on.	TM074899

Cause	Remedy
The internal non-return valve is defective or blocked in completely or partially open position.	• Clean, repair or replace the non-return valve.
A small leakage is detected by the micro-leakage detection. Alarm is on.	• Make sure that all taps are closed, and check the system for leakages.

6.11 The pump is not running and Grundfos Eye is flashing red

Grundfos Eye: Two opposite red indicator lights are flashing simultaneously.	TM053839

Cause	Remedy
The shaft seal is seized up.	• Dismantle the pump. • Remove the impurities.
The pump is blocked by impurities.	• Inspect the pump for signs of blockage, and remove any impurities.
Overheating due to seized-up or choked-up pump.	• Contact your pump supplier.
Too low or too high supply voltage.	• Check the supply voltage and correct the fault, if possible.

6.12 The pump is running and the motor shows a red indicator light

Grundfos Eye: Two opposite green indicator lights are rotating.		TM053829
The leakage indicator light is on.		TM074899

Cause	Remedy
The non-return valve is not properly closed or the pipe system is leaking. This happens when cycling alarm and/or leakage alarm are disabled.	• Check and repair the pipe system, or clean, repair or replace the non-return valve.
Small continuous consumption.	• Make sure that all taps are closed. • Check the system for leakages.

6.13 The pump cuts out during operation

Grundfos Eye: Two opposite red indicator lights are flashing simultaneously.		TM053839

Cause	Remedy
Overheating caused by one of the following: • overloaded motor • seized-up motor or pump.	• Contact your pump supplier.
The voltage is too low.	• Check the supply voltage and correct the fault, if possible.

6.14 Electric shock

All electrical connections must be carried out by qualified persons in accordance with local regulations.

Cause	Remedy
Defective earth connection.	• Connect the earth connection to the pump according to local regulations.

6.15 Resetting fault indications

A fault indication can be reset in one of the two following ways:

1. Eliminate the fault cause and reset the pump manually by pressing the **Reset** button.
2. Enable the **Auto reset** function.

Example:

If the fault disappears by itself, the pump will attempt to reset automatically, and the fault indication will disappear. The fault indication will still be visible in the Grundfos GO alarm log.

7. Maintenance

The system does not require regular maintenance.

The following maintenance activities can be performed preventatively every 6-12 months:

- Make sure that the valve closes hermetically and that the float switch can move freely.
- Make sure that the pump is delivering the correct pressure and that it is not making any mechanical noise or whistling.
- Make sure that there are no leaks in the connections.
- Confirm that the level sensor functions correctly when cleaning the rainwater tank.

7.1 Cleaning the filter

To clean the filter on the SCALA1 system, follow the steps below.

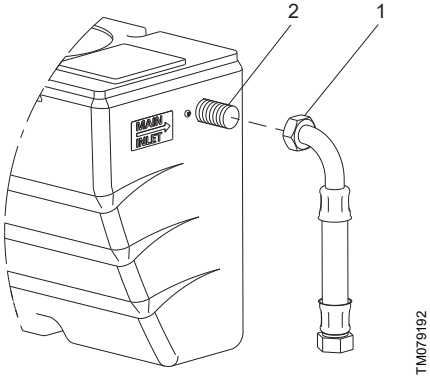

Pos.	Description
1	Tuboflex tap water inlet
2	Pressure relief valve

1. Loosen and remove the ring nut of the Tuboflex.
2. Remove any dirt from the filter with a pressure washer.
3. Insert the filter back into the pressure relief valve.
4. Place the gasket on the ring nut of the Tuboflex.
5. Tighten the ring nut onto the screw thread of the regulator.

   Make sure the screw thread of the ring nut is correctly positioned on the screw thread of the pressure relief valve.

8. Technical data

8.1 Operating conditions

	SCALA1 System	
	3-35	**3-45**
Pump water temperature [°C]	5-35	5-35
Max. ambient temperature [°C]	55	55
Max. liquid temperature [°C]	45	45
Max. system pressure [bar]	8	8
Max. inlet pressure [bar]	4	3
Max. inlet pressure from mains [bar]	10	10
Max. head [m]	36	45
Nominal head [m]	20	25
Nominal flow [m³/h]	3.72	3.59
IP Rating System	IP 20	IP 20
Pumped liquid	Rainwater	Rainwater
Noise level [db(A)] [2)]	< 55	< 55
Frequency of starts and stops	25 per hour	25 per hour
Start pressure (pstart) [bar]	1.5	2.2
Inlet and outlet connections	1"	1"
Diameter of tap water pipe	3/4"	3/4"
Diameter of overflow	PP DN 50 M	PP DN 50 M
Tank capacity [L]	15 [3)]	15
Material of tank	HDPE (high-density polyethylene)	
Float switch level of tank	Start/Stop float switch with 20 m cable	
Media type	Non-aggressive and non-explosive liquids without solid particles or fibres or abrasive water.	

2) Noise level of SCALA1 pump

3) Useful volume is 12 L

8.2 Mechanical data

Pipe connections are R1" or NPT1".

8.3 Electrical data

Pump type	Voltage [V]	P1 [W]	P2 [W]	n [rpm]	I_n [A]	I_{start} [A]	Standby power [W]
SCALA1 3-35	1 × 230	720	450	2800	3.27	13.0	1.5
SCALA1 3-45	1 × 230	910	580	2800	4.10	17.0	1.5

8.4 Dimensions and weights

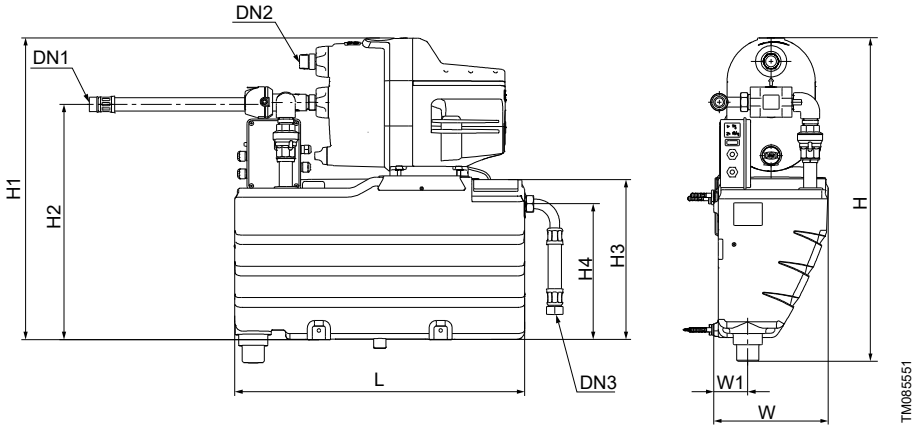

Pump	H [mm]	H1 [mm]	H2 [mm]	H3 [mm]	H4 [mm]	L [mm]	W [mm]	W1 [mm]	DN1	DN2	DN3	Weight [kg]
SCALA1 System 3-35	733	679	533.5	366	305	650	259.3	77	1"	1"	3/4"	26
SCALA1 System 3-45	733	679	533.5	366	305	650	259.3	77	1"	1"	3/4"	27

9. Disposing of the product

This product or parts of it must be disposed of in an environmentally sound way.

1. Use the public or private waste collection service.
2. If this is not possible, contact the nearest Grundfos company or service workshop.
3. Dispose of the waste battery through the national collective schemes. If in doubt, contact your local Grundfos company.

The crossed-out wheelie bin symbol on a product means that it must be disposed of separately from household waste. When a product marked with this symbol reaches its end of life, take it to a collection point designated by the local waste disposal authorities. The separate collection and recycling of such products will help protect the environment and human health.

See also end-of-life information at *www.grundfos.com/product-recycling*.

9.1 Disposing of hazardous or toxic materials

WARNING
Chemical hazard
Death or serious personal injury

- Observe the material safety data sheet of the dosing medium.
- Wear protective clothing when working on the dosing head, connections or lines.
- Rinse the parts that have been in contact with the dosing medium.
- Collect and dispose of all chemicals in a way that is not harmful to persons or the environment.

The materials used in DMX pumps do not pose any health risk to the person handling them. To identify the specific materials, check the type key on the product nameplate and read the explanation in the section Type key.

Observe also the product recycling page on *http://www.grundfos.com/products/product-sustainability/dmx.html*

10. Document quality feedback

To provide feedback about this document, scan the QR-code using your phone's camera or a QR code app.

Click here to submit your feedback

Argentina
Bombas GRUNDFOS de Argentina S.A.
Ruta Panamericana km. 37.500industin
1619 - Garín Pcia. de B.A.
Tel.: +54-3327 414 444
Fax: +54-3327 45 3190

Australia
GRUNDFOS Pumps Pty. Ltd.
P.O. Box 2040
Regency Park
South Australia 5942
Tel.: +61-8-8461-4611
Fax: +61-8-8340-0155

Austria
GRUNDFOS Pumpen Vertrieb
Ges.m.b.H.
Grundfosstraße 2
A-5082 Grödig/Salzburg
Tel.: +43-6246-883-0
Fax: +43-6246-883-30

Belgium
N.V. GRUNDFOS Bellux S.A.
Boomsesteenweg 81-83
B-2630 Aartselaar
Tel.: +32-3-870 7300
Fax: +32-3-870 7301

Bosnia and Herzegovina
GRUNDFOS Sarajevo
Zmaja od Bosne 7-7A
BiH-71000 Sarajevo
Tel.: +387 33 592 480
Fax: +387 33 590 465
www.ba.grundfos.com
E-mail: grundfos@bih.net.ba

Brazil
BOMBAS GRUNDFOS DO BRASIL
Av. Humberto de Alencar Castelo
Branco, 630
CEP 09850 - 300
São Bernardo do Campo - SP
Tel.: +55-11 4393 5533
Fax: +55-11 4343 5015

Bulgaria
Grundfos Bulgaria EOOD
Slatina District
Iztochna Tangenta street no. 100
BG - 1592 Sofia
Tel.: +359 2 49 22 200
Fax: +359 2 49 22 201
E-mail: bulgaria@grundfos.bg

Canada
GRUNDFOS Canada inc.
2941 Brighton Road
Oakville, Ontario
L6H 6C9
Tel.: +1-905 829 9533
Fax: +1-905 829 9512

China
GRUNDFOS Pumps (Shanghai) Co. Ltd.
10F The Hub, No. 33 Suhong Road
Minhang District
Shanghai 201106 PRC
Tel.: +86 21 612 252 22
Fax: +86 21 612 253 33

Colombia
GRUNDFOS Colombia S.A.S.
Km 1.5 vía Siberia-Cota Conj. Potrero
Chico,
Parque Empresarial Arcos de Cota Bod.
1A.
Cota, Cundinamarca
Tel.: +57(1)-2913444
Fax: +57(1)-8764586

Croatia
GRUNDFOS CROATIA d.o.o.
Buzinski prilaz 38, Buzin
HR-10010 Zagreb
Tel.: +385 1 6595 400
Fax: +385 1 6595 499
www.hr.grundfos.com

Czech Republic
GRUNDFOS Sales Czechia and Slovakia
s.r.o.
Čajkovského 21
779 00 Olomouc
Tel.: +420-585-716 111

Denmark
GRUNDFOS DK A/S
Martin Bachs Vej 3
DK-8850 Bjerringbro
Tel.: +45-87 50 50 50
www.grundfos.com/DK

Estonia
SIA Grundfos Pumps Baltic Eesti filiaal
Priisle tee 10
13914 Tallinn
Tel.: + 372 606 1690
E-mail: estonia@sales.grundfos.com

Finland
OY GRUNDFOS Pumput AB
Trukkikuja 1
FI-01360 Vantaa
Tel.: +358-(0) 207 889 500

France
Pompes GRUNDFOS Distribution S.A.
Parc d'Activités de Chesnes
57, rue de Malacombe
F-38290 St. Quentin Fallavier (Lyon)
Tel.: +33-4 74 82 15 15
Fax: +33-4 74 94 10 51

Germany
GRUNDFOS GMBH
Schlüterstr. 33
40699 Erkrath
Tel.: +49-(0) 211 929 69-0
Fax: +49-(0) 211 929 69-3799
E-mail: infoservice@grundfos.de
Service in Deutschland:
kundendienst@grundfos.de

Greece
GRUNDFOS Hellas A.E.B.E.
20th km. Athinon-Markopoulou Av.
P.O. Box 71
GR-19002 Peania
Tel.: +0030-210-66 83 400
Fax: +0030-210-66 46 273

Hong Kong
GRUNDFOS Pumps (Hong Kong) Ltd.
Unit 1, Ground floor, Siu Wai industrial
Centre
29-33 Wing Hong Street & 68 King Lam
Street, Cheung Sha Wan
Kowloon
Tel.: +852-27861706 / 27861741
Fax: +852-27858664

Hungary
GRUNDFOS South East Europe Kft.
Tópark u. 8
H-2045 Törökbálint
Tel.: +36-23 511 110
Fax: +36-23 511 111

India
GRUNDFOS Pumps India Private
Limited
118 Old Mahabalipuram Road
Thoraipakkam
Chennai 600 097
Tel.: +91-44 2496 6800

Indonesia
PT GRUNDFOS Pompa
Graha intirub Lt. 2 & 3
Jln. Cililitan Besar No.454. Makasar,
Jakarta Timur
ID-Jakarta 13650
Tel.: +62 21-469-51900
Fax: +62 21-460 6910 / 460 6901

Ireland
GRUNDFOS (Ireland) Ltd.
Unit A, Merrywell Business Park
Ballymount Road Lower
Dublin 12
Tel.: +353-1-4089 800
Fax: +353-1-4089 830

Italy
GRUNDFOS Pompe Italia S.r.l.
Via Gran Sasso 4
I-20060 Truccazzano (Milano)
Tel.: +39-02-95838112
Fax: +39-02-95309290 / 95838461

Japan
GRUNDFOS Pumps K.K.
1-2-3, Shin-Miyakoda, Kita-ku
Hamamatsu
431-2103 Japan
Tel.: +81 53 428 4760
Fax: +81 53 428 5005

Kazakhstan
Grundfos Kazakhstan LLP
7' Kyz-Zhibek Str., Kok-Tobe micr.
KZ-050020 Almaty Kazakhstan
Tel.: +7 (727) 227-98-55/56

Korea
GRUNDFOS Pumps Korea Ltd.
6th Floor, Aju Building 679-5
Yeoksam-dong, Kangnam-ku, 135-916
Seoul, Korea
Tel.: +82-2-5317 600
Fax: +82-2-5633 725

Latvia
GRUNDFOS Pumps Baltic SIA
Gunāra Astras iela 8B
LV-1082, Rīga,
Tel.: + 371 671 49640
E-mail: latvia@sales.grundfos.com

Lithuania
SIA „GRUNDFOS PUMPS BALTIC“ Lietuvos filialas
Smolensko g. 6
LT-03201 Vilnius
Tel.: + 370 5 239 5430
E-mail: lithuania@sales.grundfos.com

Malaysia
GRUNDFOS Pumps Sdn. Bhd.
7 Jalan Peguam U1/25
Glenmarie industrial Park
40150 Shah Alam, Selangor
Tel.: +60-3-5569 2922
Fax: +60-3-5569 2866

Mexico
Bombas GRUNDFOS de México S.A. de C.V.
Boulevard TLC No. 15
Parque industrial Stiva Aeropuerto
Apodaca, N.L. 66600
Tel.: +52-81-8144 4000
Fax: +52-81-8144 4010

Netherlands
GRUNDFOS Netherlands
Veluwezoom 35
1326 AE Almere
Postbus 22015
1302 CA ALMERE
Tel.: +31-88-478 6336
Fax: +31-88-478 6332
E-mail: info_gnl@grundfos.com

New Zealand
GRUNDFOS Pumps NZ Ltd.
17 Beatrice Tinsley Crescent
North Harbour Industrial Estate
Albany, Auckland
Tel.: +64-9-415 3240
Fax: +64-9-415 3250

Norway
GRUNDFOS Pumper A/S
Strømsveien 344
Postboks 235, Leirdal
N-1011 Oslo
Tel.: +47-22 90 47 00
Fax: +47-22 32 21 50

Poland
GRUNDFOS Pompy Sp. z o.o.
ul. Klonowa 23
Baranowo k. Poznania
PL-62-081 Przeźmierowo
Tel.: (+48-61) 650 13 00
Fax: (+48-61) 650 13 50

Portugal
Bombas GRUNDFOS Portugal, S.A.
Rua Calvet de Magalhães, 241
Apartado 1079
P-2770-153 Paço de Arcos
Tel.: +351-21-440 76 00
Fax: +351-21-440 76 90

Romania
GRUNDFOS Pompe România SRL
S-PARK BUSINESS CENTER, Clădirea A2, etaj 2
Str. Tipografilor, Nr. 11-15, Sector 1, Cod 013714
Bucuresti, Romania
Tel.: 004 021 2004 100
E-mail: romania@grundfos.ro

Serbia
Grundfos Srbija d.o.o.
Omladinskih brigada 90b
11070 Novi Beograd
Tel.: +381 11 2258 740
Fax: +381 11 2281 769
www.rs.grundfos.com

Singapore
GRUNDFOS (Singapore) Pte. Ltd.
25 Jalan Tukang
Singapore 619264
Tel.: +65-6681 9688
Fax: +65-6681 9689

Slovakia
GRUNDFOS s.r.o.
Prievozská 4D 821 09 BRATISLAVA
Tel.: +421 2 5020 1426
sk.grundfos.com

Slovenia
GRUNDFOS LJUBLJANA, d.o.o.
Leskoškova 9e, 1122 Ljubljana
Tel.: +386 (0) 1 568 06 10
Fax: +386 (0)1 568 06 19
E-mail: tehnika-si@grundfos.com

South Africa
GRUNDFOS (PTY) LTD
16 Lascelles Drive, Meadowbrook Estate
1609 Germiston, Johannesburg
Tel.: (+27) 10 248 6000
Fax: (+27) 10 248 6002
E-mail: lgradidge@grundfos.com

Spain
Bombas GRUNDFOS España S.A.
Camino de la Fuentecilla, s/n
E-28110 Algete (Madrid)
Tel.: +34-91-848 8800
Fax: +34-91-628 0465

Sweden
GRUNDFOS AB
Box 333 (Lunnagårdsgatan 6)
431 24 Mölndal
Tel.: +46 31 332 23 000
Fax: +46 31 331 94 60

Switzerland
GRUNDFOS Pumpen AG
Bruggacherstrasse 10
CH-8117 Fällanden/ZH
Tel.: +41-44-806 8111
Fax: +41-44-806 8115

Taiwan
GRUNDFOS Pumps (Taiwan) Ltd.
7 Floor, 219 Min-Chuan Road
Taichung, Taiwan, R.O.C.
Tel.: +886-4-2305 0868
Fax: +886-4-2305 0878

Thailand
GRUNDFOS (Thailand) Ltd.
92 Chaloem Phrakiat Rama 9 Road
Dokmai, Pravej, Bangkok 10250
Tel.: +66-2-725 8999
Fax: +66-2-725 8998

Turkey
GRUNDFOS POMPA San. ve Tic. Ltd. Sti.
Gebze Organize Sanayi Bölgesi
Ihsan dede Caddesi
2. yol 200. Sokak No. 204
41490 Gebze/ Kocaeli
Tel.: +90 - 262-679 7979
Fax: +90 - 262-679 7905
E-mail: satis@grundfos.com

Ukraine
ТОВ "ГРУНДФОС УКРАЇНА"
Бізнес Центр Європа
Столичне шосе, 103
м. Київ, 03131, Україна
Tel.: (+38 044) 237 04 00
Fax: (+38 044) 237 04 01
E-mail: ukraine@grundfos.com

United Arab Emirates
GRUNDFOS Gulf Distribution
P.O. Box 16768
Jebel Ali Free Zone, Dubai
Tel.: +971 4 8815 166
Fax: +971 4 8815 136

United Kingdom
GRUNDFOS Pumps Ltd.
Grovebury Road
Leighton Buzzard/Beds. LU7 4TL
Tel.: +44-1525-850000
Fax: +44-1525-850011

U.S.A.
Global Headquarters for WU
856 Koomey Road
Brookshire, Texas 77423 USA
Phone: +1-630-236-5500

Uzbekistan
Grundfos Tashkent, Uzbekistan
The Representative Office of Grundfos Kazakhstan in Uzbekistan
38a, Oybek street, Tashkent
Tel.: (+998) 71 150 3290 / 71 150 3291
Fax: (+998) 71 150 3292

© Grundfos Holding A/S 07.2026

92585523

ECM: 1453350	07.2026

Grundfos Holding A/S
Poul Due Jensens Vej 7
DK-8850 Bjerringbro
Tel: +45 87 50 14 00
www.grundfos.com