THIRD ANGLE PROJECTION

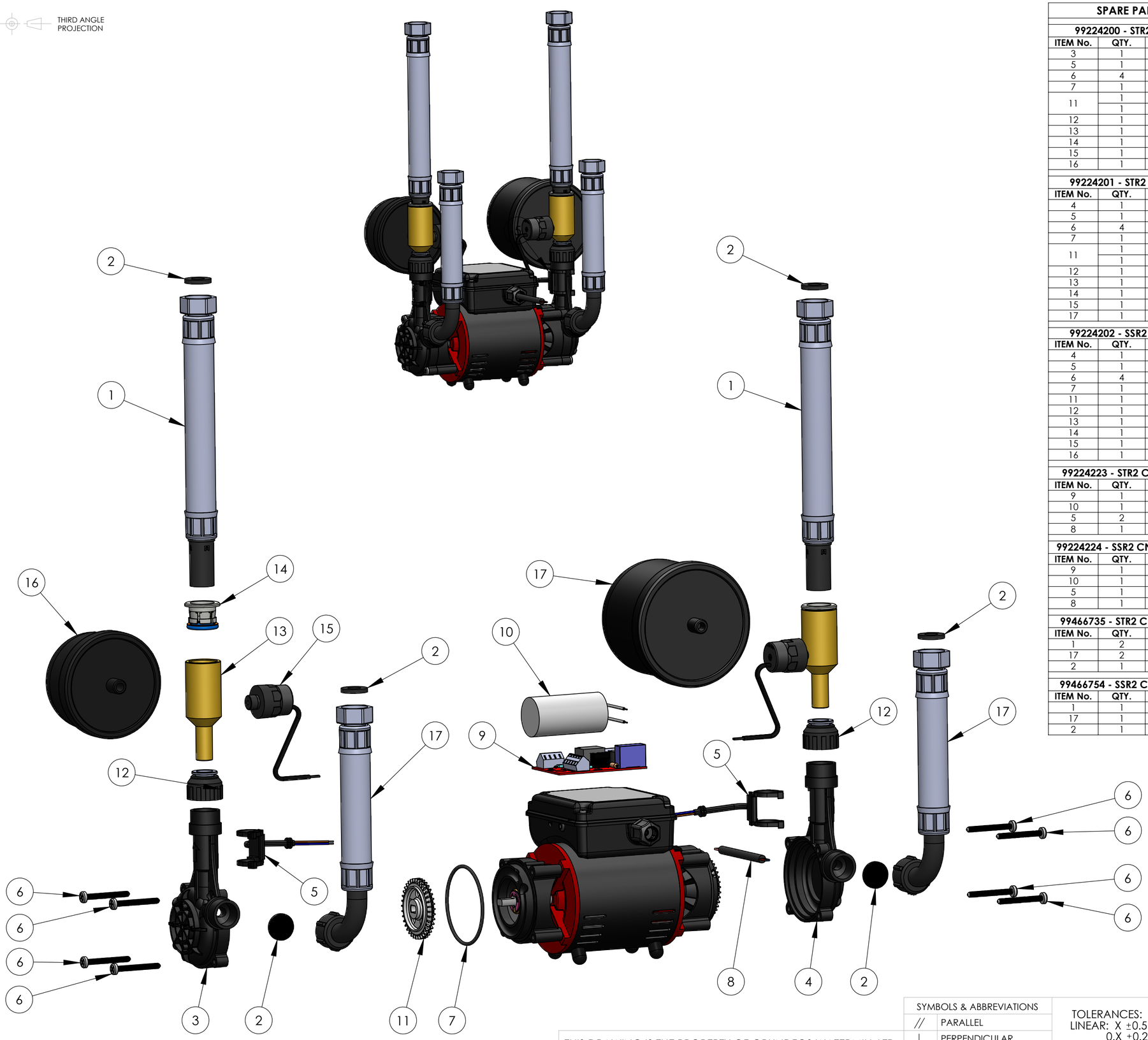

SPARE PARTS KITS - STR2 CN & SSR2 CN UNIVERSAL HEAD PUMPS - IRELAND

99224200 - STR2 CN PUMP HEAD - LEFT HAND - UNIVERSAL HEAD (SMALL PRESSURE VESSEL)

ITEM No.	QTY.	DESCRIPTION
3	1	PUMP HEAD ASSEMBLY - STR2 LEFT HAND - WITH FLOAT
5	1	REED SWITCH + CABLE TIES
6	4	PUMP HEAD SCREW - STR2 PUMP
7	1	PUMP HEAD O-RING - STR2 PUMP
11	1	IMPELLER - 1.5 BAR (BLACK) - STR2 PUMP
	1	IMPELLER - 2.0 BAR (WHITE) - STR2 PUMP
12	1	COLLET ADAPTOR KIT
13	1	ADAPTER UNIVERSAL HEAD 15mm - BRASS - WITH NON-RETURN VALVE
14	1	22mm COLLET SET
15	1	PRESSURE SWITCH
16	1	PRESSURE VESSEL - 0.3 LITRE

99224201 - STR2 CN PUMP HEAD - RIGHT HAND - UNIVERSAL HEAD (LARGE PRESSURE VESSEL)

ITEM No.	QTY.	DESCRIPTION
4	1	PUMP HEAD ASSEMBLY - STR2 RIGHT HAND - WITH FLOAT
5	1	REED SWITCH + CABLE TIES
6	4	PUMP HEAD SCREW - STR2 PUMP
7	1	PUMP HEAD O-RING - STR2 PUMP
11	1	IMPELLER - 1.5 BAR (BLACK) - STR2 PUMP
	1	IMPELLER - 2.0 BAR (WHITE) - STR2 PUMP
12	1	COLLET ADAPTOR KIT
13	1	ADAPTER UNIVERSAL HEAD 15mm - BRASS - WITH NON-RETURN VALVE
14	1	22mm COLLET SET
15	1	PRESSURE SWITCH
17	1	PRESSURE VESSEL - 0.5 LITRE

99224202 - SSR2 CN PUMP HEAD - RIGHT HAND - UNIVERSAL HEAD (SMALL PRESSURE VESSEL)

ITEM No.	QTY.	DESCRIPTION
4	1	PUMP HEAD ASSEMBLY - STR2 RIGHT HAND - WITH FLOAT
5	1	REED SWITCH + CABLE TIES
6	4	PUMP HEAD SCREW - STR2 PUMP
7	1	PUMP HEAD O-RING - STR2 PUMP
11	1	IMPELLER - 2.0 BAR (WHITE) - STR2 PUMP
12	1	COLLET ADAPTOR KIT
13	1	ADAPTER UNIVERSAL HEAD 15mm - BRASS - WITH NON-RETURN VALVE
14	1	22mm COLLET SET
15	1	PRESSURE SWITCH
16	1	PRESSURE VESSEL - 0.3 LITRE

99224223 - STR2 CN PCB, CAPACITOR, REED SWITCHES & MAINS CABLE - TWIN UNIVERSAL PUMP

ITEM No.	QTY.	DESCRIPTION
9	1	PCB - UNIVERSAL HEAD - STR2 CN PUMP
10	1	CAPACITOR - 8µF
5	2	REED SWITCH + CABLE TIES
8	1	MAINS CABLE - STR2 PUMP

99224224 - SSR2 CN PCB, CAPACITOR, REED SWITCHES & MAINS CABLE - SINGLE UNIVERSAL PUMP

ITEM No.	QTY.	DESCRIPTION
9	1	PCB - UNIVERSAL HEAD - SSR2 CN PUMP
10	1	CAPACITOR - 8µF
5	1	REED SWITCH + CABLE TIES
8	1	MAINS CABLE - SSR2 PUMP

99466735 - STR2 CN UNIVERSAL HEAD PUMP - FLEXIBLE HOSE SET (IRELAND - 3/4" BSP METAL NUT)

ITEM No.	QTY.	DESCRIPTION
1	2	HOSE - 22mm PLASTIC STANDPIPE (3/4" BSP METAL NUT)
17	2	HOSE - 22mm ELBOW (3/4" BSP METAL NUT)
2	1	HOSE WASHER SET (2 STRAINER WASHERS & 6 PLAIN WASHERS)

99466754 - SSR2 CN UNIVERSAL HEAD PUMP - FLEXIBLE HOSE SET (IRELAND - 3/4" BSP METAL NUT)

ITEM No.	QTY.	DESCRIPTION
1	1	HOSE - 22mm PLASTIC STANDPIPE (3/4" BSP METAL NUT)
17	1	HOSE - 22mm ELBOW (3/4" BSP METAL NUT)
2	1	HOSE WASHER SET (2 STRAINER WASHERS & 2 PLAIN WASHERS)

ISSUE	MODIFICATION	DATE	ECR No.
02	CHANGE FROM PARTS TO SPARES KITS.	07.06.18	858
01	ORIGINAL ISSUE	21.01.16	733

THIS DRAWING IS THE PROPERTY OF GRUNDFOS WATERMILL LTD. AND MUST NOT BE PASSED ON TO ANY PERSON OR BE COPIED OR OTHERWISE UTILISED WITHOUT WRITTEN PERMISSION FROM GRUNDFOS WATERMILL LTD.
© 2016 GRUNDFOS WATERMILL LTD.

SYMBOLS & ABBREVIATIONS	
//	PARALLEL
⊥	PERPENDICULAR
◎	CONCENTRIC
℄	CENTRE LINE
P.C.D.	PITCH CIRCLE DIAMETER

TOLERANCES:
LINEAR: X ±0.5
0.X ±0.2
0.XX ±0.1
ANGULAR: ±0.5 DEG

	NAME	DATE
DRAWN	R.P.	21.01.16
CHK'D	J.H.	11.06.18

DO NOT SCALE DRAWING
DIMENSIONS IN MILLIMETRES

FINISH:

DEBUR AND BREAK SHARP EDGES

MATERIAL:

GRUNDFOS WATERMILL
Gemini House, Enterprise Way,
Edenbridge. Kent. TN8 6HF.

TITLE: EXPLODED PARTS VIEW - STR2 & SSR2 PUMP UNIVERSAL HEAD IRELAND - SPARES

DWG NO. 10632

SHEET SIZE A2

SCALE:1:2.5

SHEET 1 OF 1