THIRD ANGLE PROJECTION

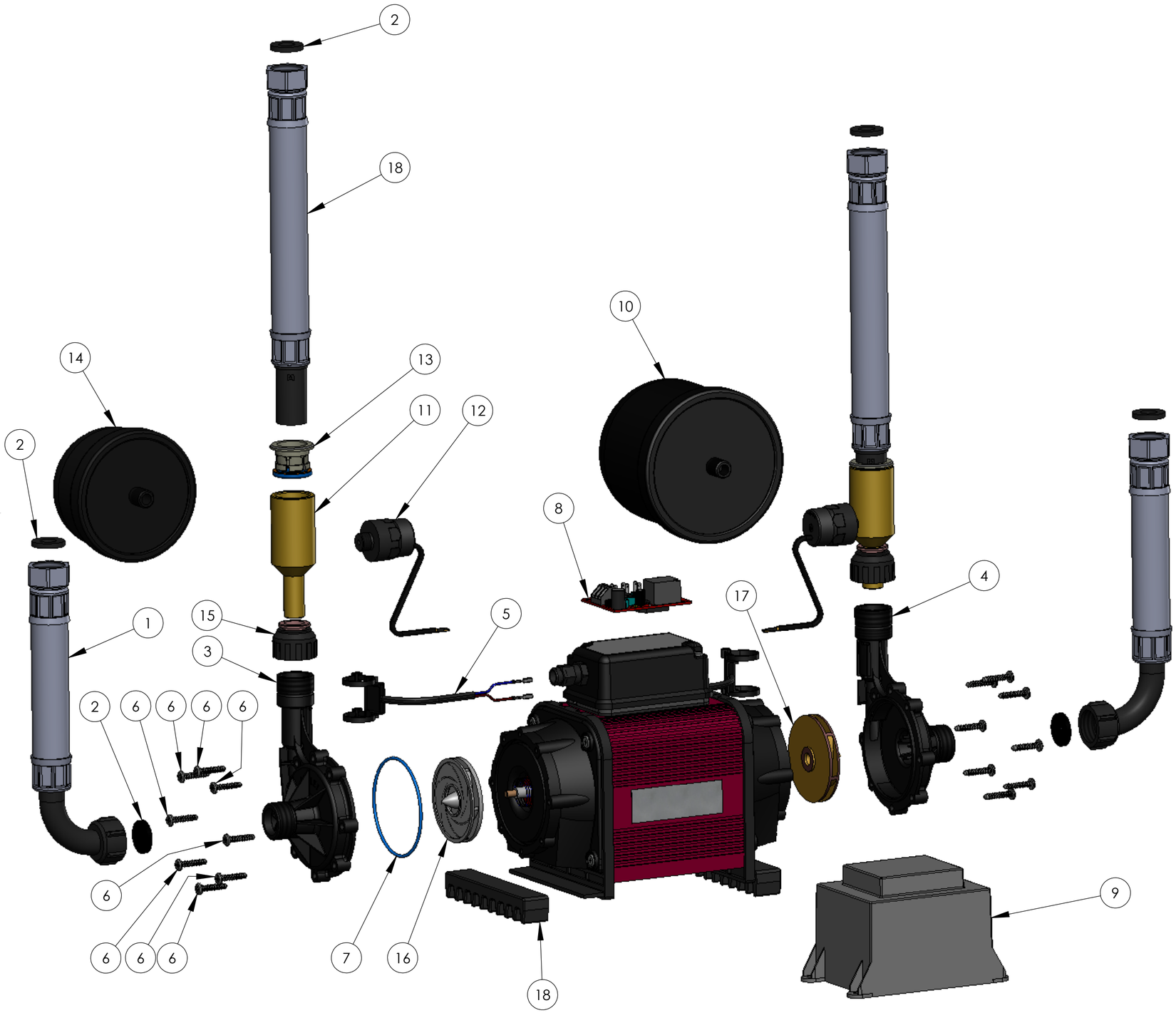

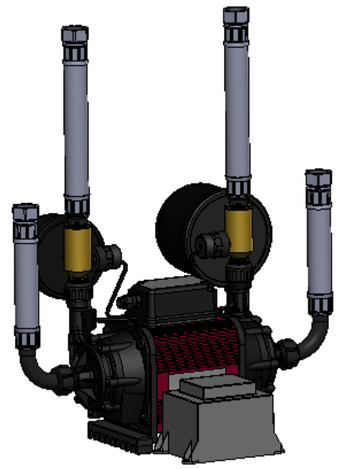

SPARE PARTS KITS - STL CN LOW VOLTAGE CENTRIFUGAL UNIVERSAL HEAD PUMPS - IRELAND

99224138 - STC / STL PUMP HEAD - LEFT HAND - UNIVERSAL HEAD (SMALL PRESSURE VESSEL)

ITEM No.	QTY.	DESCRIPTION
3	1	PUMP HEAD MOULDING - CENTRIFUGAL - LEFT HAND - WITH FLOAT
5	1	REED SWITCH + CABLES TIES
6	8	PUMP HEAD SCREW - CENTRIFUGAL PUMP
7	1	PUMP HEAD O-RING - CENTRIFUGAL PUMP
16	1	IMPELLER - CENTRIFUGAL PUMP - LEFT SIDE
15	1	COLLET ADAPTOR KIT
11	1	ADAPTER UNIVERSAL HEAD 15mm - BRASS - WITH NON-RETURN VALVE
13	1	22mm COLLET SET
12	1	PRESSURE SWITCH
14	1	PRESSURE VESSEL - 0.3 LITRE

99224139 - STC / STL PUMP HEAD - RIGHT HAND - UNIVERSAL HEAD (LARGE PRESSURE VESSEL)

ITEM No.	QTY.	DESCRIPTION
4	1	PUMP HEAD MOULDING - CENTRIFUGAL - RIGHT HAND - WITH FLOAT
5	1	REED SWITCH + CABLES TIES
6	8	PUMP HEAD SCREW - CENTRIFUGAL PUMP
7	1	PUMP HEAD O-RING - CENTRIFUGAL PUMP
17	1	IMPELLER - CENTRIFUGAL PUMP - RIGHT SIDE
15	1	COLLET ADAPTOR KIT
11	1	ADAPTER UNIVERSAL HEAD 15mm - BRASS - WITH NON-RETURN VALVE
13	1	22mm COLLET SET
12	1	PRESSURE SWITCH
10	1	PRESSURE VESSEL - 0.5 LITRE

99224165 - STL CN PCB - UNIVERSAL HEAD & REED SWITCHES

ITEM No.	QTY.	DESCRIPTION
8	1	PCB - LOW VOLTAGE CENTRIFUGAL PUMP - UNIVERSAL HEAD
5	2	REED SWITCH + CABLES TIES

99466735 - STC CN / STL CN / STR2 CN UNIVERSAL HEAD PUMP - FLEXIBLE HOSE SET (IRELAND - 3/4" BSP METAL NUT)

ITEM No.	QTY.	DESCRIPTION
18	2	HOSE - 22mm PLASTIC STANDPIPE (3/4" BSP METAL NUT)
1	2	HOSE - 22mm ELBOW (3/4" BSP METAL NUT)
2	1	HOSE WASHER SET (2 STRAINER WASHERS & 6 PLAIN WASHERS)

99224135 - STC / STL ANTI-VIBRATION FOOT & PUMP HEAD O-RING

ITEM No.	QTY.	DESCRIPTION
18	2	ANTI-VIBRATION FOOT - CENTRIFUGAL PUMP
6	16	PUMP HEAD SCREW - CENTRIFUGAL PUMP
7	2	PUMP HEAD O-RING - CENTRIFUGAL PUMP

99224168 - STL 2.0 BAR PUMP TRANSFORMER

ITEM No.	QTY.	DESCRIPTION
9	1	TRANSFORMER - STL-2.0 C(N)

ISSUE	MODIFICATION	DATE	ECR No.
04	CHANGE FROM PARTS TO SPARES KITS.	01.06.18	858
03	ITEM 9 WAS AT030	16.08.13	626
02	ADD VOLUTES AND REED SWITCH FOR CABLE TIE VERSION	11.12.12	589
01	ORIGINAL ISSUE	04.01.12	548

THIS DRAWING IS THE PROPERTY OF GRUNDFOS WATERMILL LTD. AND MUST NOT BE PASSED ON TO ANY PERSON OR BE COPIED OR OTHERWISE UTILISED WITHOUT WRITTEN PERMISSION FROM GRUNDFOS WATERMILL LTD.
© 2009 GRUNDFOS WATERMILL LTD.

SYMBOLS & ABBREVIATIONS	
//	PARALLEL
⊥	PERPENDICULAR
◎	CONCENTRIC
℄	CENTRE LINE
P.C.D.	PITCH CIRCLE DIAMETER

TOLERANCES:
LINEAR: X ±0.5
0.X ±0.2
0.XX ±0.1
ANGULAR: ±0.5 DEG

	NAME	DATE
DRAWN	R.P.	04.01.12
CHK'D	J.H.	11.06.18

DO NOT SCALE DRAWING
DIMENSIONS IN MILLIMETRES

FINISH:

DEBUR AND BREAK SHARP EDGES

MATERIAL:

GRUNDFOS WATERMILL
Gemini House, Enterprise Way,
Edenbridge. Kent. TN8 6HF.

TITLE: EXPLODED PARTS VIEW - LV CENTRIFUGAL NEGATIVE HEAD (ONE PIECE VOLUTES) - IRELAND - SPARES

DWG NO. 10303

SHEET SIZE A2

SCALE:1:2.25

SHEET 1 OF 1