THIRD ANGLE PROJECTION

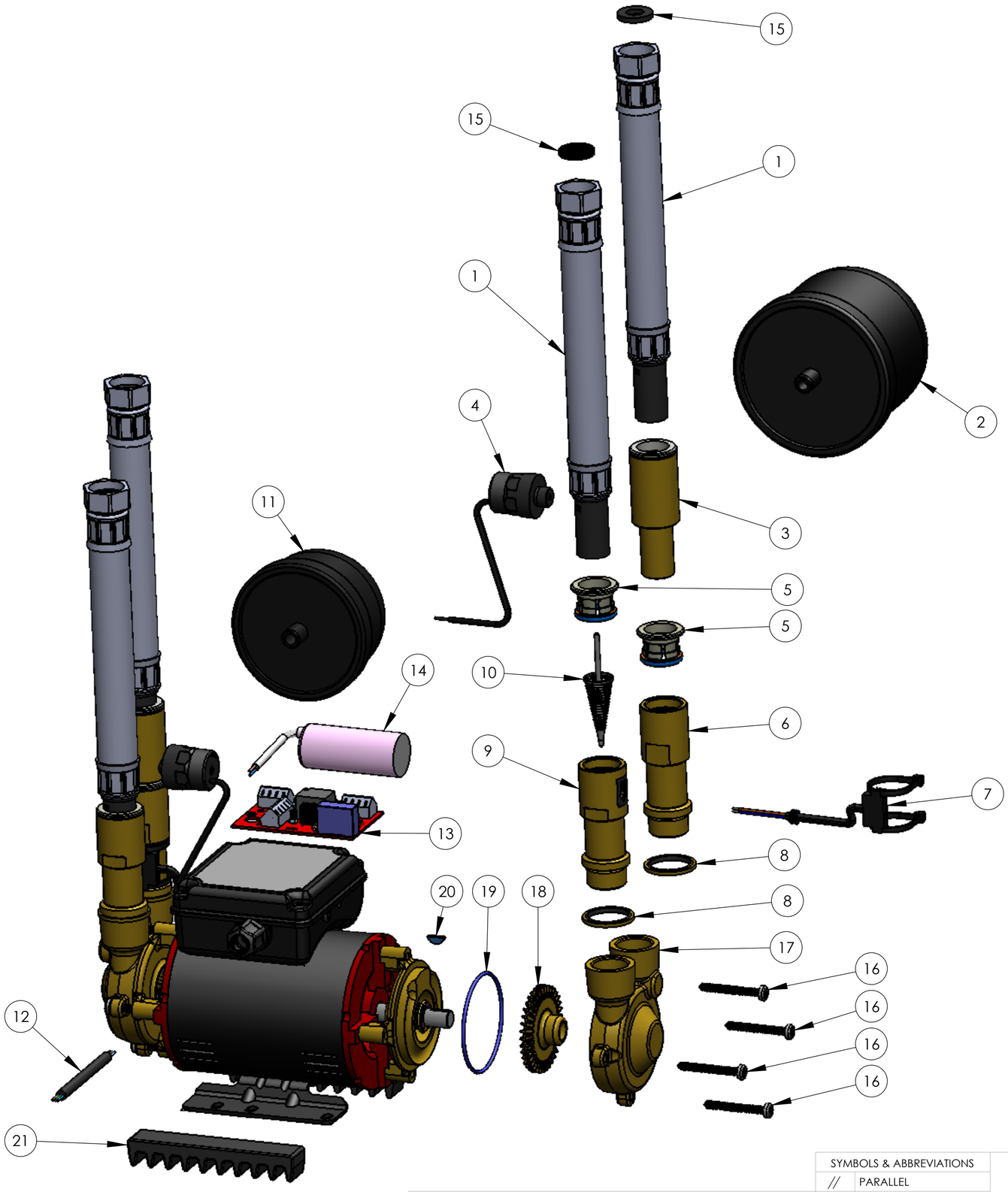

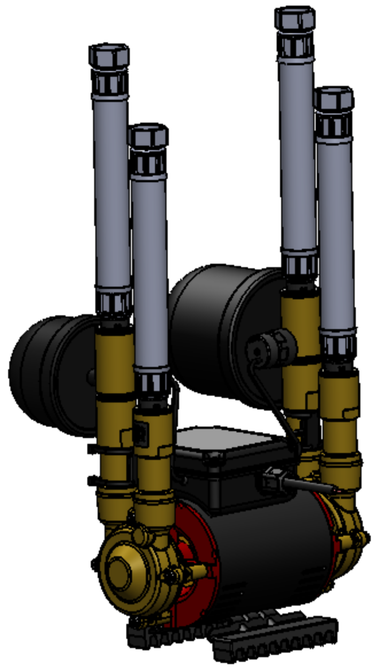

ISSUE	MODIFICATION	DATE	ECR No.
09	CHANGE FROM PARTS TO SPARES KITS. ADD SHEET 2.	30.05.18	858
08	DELETE MG027 & MS069. ADD MG10651.	08.08.17	810
07	UPDATE CAPACITORS, IMPELLERS AND ANTI-VIBRATION FEET	07.09.16	764
06	ADD BP448 PRESSURE SWITCH	20.01.16	734
05	UPDATE CAPACITOR FOR STN-2.0 B	01.10.15	723
04	UPDATE CAPACITOR FOR SSN-2.0 B & SSN-3.0 B	31.03.14	666
03	UPDATE CAPACITORS FOR STN-1.5 B & STN-2.0 B	08.01.14	648
02	UPDATE REED SWITCH, FLOW SWITCH TOWER, CAPACITORS & IMPELLERS	28.11.12	587
01	ORIGINAL ISSUE	20.08.09	411

THIS DRAWING IS THE PROPERTY OF GRUNDFOS WATERMILL LTD. AND MUST NOT BE PASSED ON TO ANY PERSON OR BE COPIED OR OTHERWISE UTILISED WITHOUT WRITTEN PERMISSION FROM GRUNDFOS WATERMILL LTD.
© 2009 GRUNDFOS WATERMILL LTD.

SYMBOLS & ABBREVIATIONS	
//	PARALLEL
⊥	PERPENDICULAR
◎	CONCENTRIC
℄	CENTRE LINE
P.C.D.	PITCH CIRCLE DIAMETER

TOLERANCES:
LINEAR: X ±0.5
0.X ±0.2
0.XX ±0.1
ANGULAR: ±0.5 DEG

	NAME	DATE
DRAWN	R.P.	20.08.09
CHK'D	J.H.	11.06.18

DO NOT SCALE DRAWING
DIMENSIONS IN MILLIMETRES

FINISH:

DEBUR AND BREAK SHARP EDGES

MATERIAL:

GRUNDFOS WATERMILL
Gemini House, Enterprise Way,
Edenbridge. Kent. TN8 6HF.

TITLE:
EXPLODED PARTS VIEW - BRASS
UNIVERSAL HEAD PUMP IRELAND - SPARES

DWG NO. 10032

SHEET SIZE A2

SCALE:

SHEET 1 OF 2

THIRD ANGLE PROJECTION

SPARE PARTS KITS - STN & SSN BRASS UNIVERSAL HEAD PUMPS - IRELAND

99224226 - STP / SSP / STN / SSN PUMP HEAD & IMPELLER - 1.5 BAR

ITEM No.	QTY.	DESCRIPTION
17	1	PUMP HEAD - BRASS
16	4	PUMP HEAD SCREW - BRASS PUMP
19	1	PUMP HEAD O-RING - BRASS PUMP
18	1	IMPELLER - 1.5 BAR - STN-1.5 B
20	1	WOODRUFF KEY

99224227 - STP / SSP / STN / SSN PUMP HEAD & IMPELLER - 2.0 BAR

ITEM No.	QTY.	DESCRIPTION
17	1	PUMP HEAD - BRASS
16	4	PUMP HEAD SCREW - BRASS PUMP
19	1	PUMP HEAD O-RING - BRASS PUMP
18	1	IMPELLER - 2.0 BAR - STN-2.0 B & SSN-2.0 B
20	1	WOODRUFF KEY

99224229 - STP / SSP / STN / SSN PUMP HEAD & IMPELLER - 3.0 BAR

ITEM No.	QTY.	DESCRIPTION
17	1	PUMP HEAD - BRASS
16	4	PUMP HEAD SCREW - BRASS PUMP
19	1	PUMP HEAD O-RING - BRASS PUMP
18	1	IMPELLER - 3.0 BAR - STN-3.0 B & SSN-3.0 B
20	1	WOODRUFF KEY

99224230 - STP / SSP / STN / SSN PUMP HEAD & IMPELLER - 4.0 BAR

ITEM No.	QTY.	DESCRIPTION
17	1	PUMP HEAD - BRASS
16	4	PUMP HEAD SCREW - BRASS PUMP
19	1	PUMP HEAD O-RING - BRASS PUMP
18	1	IMPELLER - 4.0 BAR - STN-4.0 B
20	1	WOODRUFF KEY

99224231 - STP / SSP / STN / SSN STRAINER HOUSING TOWER

ITEM No.	QTY.	DESCRIPTION
9	1	STRAINER HOUSING - BRASS
5	1	COLLET SET 22mm
8	1	BONDED SEAL
10	1	STRAINER BASKET

99224232 - STP / SSP / STN / SSN FLOW SWITCH HOUSING TOWER

ITEM No.	QTY.	DESCRIPTION
6	1	FLOW SWITCH HOUSING - BRASS - WITH FLOAT
5	1	COLLET SET 22mm
8	1	BONDED SEAL
7	1	REED SWITCH + CABLE TIES

99466755 - STP / STN FLEXIBLE HOSE SET (IRELAND - 3/4" BSP METAL NUT)

ITEM No.	QTY.	DESCRIPTION
1	4	HOSE - 22mm PLASTIC STANDPIPE (3/4" BSP METAL NUT)
15	1	HOSE WASHER SET (2 STRAINER WASHERS & 6 PLAIN WASHERS)

99466756 - SSP / SSN FLEXIBLE HOSE SET (IRELAND - 3/4" BSP METAL NUT)

ITEM No.	QTY.	DESCRIPTION
1	2	HOSE - 22mm PLASTIC STANDPIPE (3/4" BSP METAL NUT)
15	1	HOSE WASHER SET (2 STRAINER WASHERS & 6 PLAIN WASHERS)

99224240 - STN / SSN UNIVERSAL HEAD TOWER - SMALL PRESSURE VESSEL - 1.5 & 2.0 BAR PUMPS

ITEM No.	QTY.	DESCRIPTION
3	1	ADAPTER UNIVERSAL HEAD 22mm BRASS - WITH NON-RETURN VALVE & COLLET
4	1	PRESSURE SWITCH - 1.5 & 2.0 BAR PUMPS - STN-1.5 B, STN-2.0 B & SSN-2.0 B
11	1	PRESSURE VESSEL - 0.3 LITRE

99224241 - STN / SSN UNIVERSAL HEAD TOWER - SMALL PRESSURE VESSEL - 3.0 & 4.0 BAR PUMPS

ITEM No.	QTY.	DESCRIPTION
3	1	ADAPTER UNIVERSAL HEAD 22mm BRASS - WITH NON-RETURN VALVE & COLLET
4	1	PRESSURE SWITCH - 3.0 & 4.0 BAR PUMPS - STN-3.0 B, SSN-3.0 B & STN-4.0 B
11	1	PRESSURE VESSEL - 0.3 LITRE

99224242 - STN UNIVERSAL HEAD TOWER - LARGE PRESSURE VESSEL - 1.5 & 2.0 BAR PUMPS

ITEM No.	QTY.	DESCRIPTION
3	1	ADAPTER UNIVERSAL HEAD 22mm BRASS - WITH NON-RETURN VALVE & COLLET
4	1	PRESSURE SWITCH - 1.5 & 2.0 BAR PUMPS - STN-1.5 B, STN-2.0 B
2	1	PRESSURE VESSEL - 0.5 LITRE

99224243 - STN UNIVERSAL HEAD TOWER - LARGE PRESSURE VESSEL - 3.0 & 4.0 BAR PUMPS

ITEM No.	QTY.	DESCRIPTION
3	1	ADAPTER UNIVERSAL HEAD 22mm BRASS - WITH NON-RETURN VALVE & COLLET
4	1	PRESSURE SWITCH - 3.0 & 4.0 BAR PUMPS - STN-3.0 B & STN-4.0 B
2	1	PRESSURE VESSEL - 0.5 LITRE

99224244 - STN PCB, CAPACITOR 10µF, REED SWITCHES & MAINS CABLE - 1.5, 2.0 & 3.0 BAR PUMPS

ITEM No.	QTY.	DESCRIPTION
13	1	PCB - BRASS TWIN UNIVERSAL HEAD
14	1	CAPACITOR - 10µF
7	2	REED SWITCH + CABLE TIES
12	1	MAINS CABLE - BRASS PUMP

99224245 - STN PCB, CAPACITOR 16µF, REED SWITCHES & MAINS CABLE - 4.0 BAR PUMPS

ITEM No.	QTY.	DESCRIPTION
13	1	PCB - BRASS TWIN UNIVERSAL HEAD
14	1	CAPACITOR - 16µF
7	2	REED SWITCH + CABLE TIES
12	1	MAINS CABLE - BRASS PUMP

99224246 - SSN PCB, CAPACITOR, REED SWITCH & MAINS CABLE

ITEM No.	QTY.	DESCRIPTION
13	1	PCB - BRASS SINGLE UNIVERSAL HEAD
14	1	CAPACITOR - 10µF
7	1	REED SWITCH + CABLE TIES
12	1	MAINS CABLE - BRASS PUMP

99224247 - STP / SSP / STN / SSN ANTI VIBRATION FOOT (UP TO APRIL 2016) & PUMP HEAD O-RING

ITEM No.	QTY.	DESCRIPTION
21	2	ANTI-VIBRATION FOOT - BRASS PUMP UP TO APRIL 2016
16	8	PUMP HEAD SCREW - BRASS PUMP
19	2	PUMP HEAD O-RING - BRASS PUMP

99224249 - STP / SSP / STN / SSN ANTI VIBRATION FOOT (MAY 2016 TO JANUARY 2017) & PUMP HEAD O-RING

ITEM No.	QTY.	DESCRIPTION
21	2	ANTI-VIBRATION FOOT - BRASS PUMP MAY 2016 TO JANUARY 2017
16	8	PUMP HEAD SCREW - BRASS PUMP
19	2	PUMP HEAD O-RING - BRASS PUMP

99224250 - STP / SSP / STN / SSN ANTI VIBRATION FOOT (FROM FEBRUARY 2017) & PUMP HEAD O-RING

ITEM No.	QTY.	DESCRIPTION
21	2	ANTI-VIBRATION FOOT - BRASS PUMP FROM FEBRUARY 2017
16	8	PUMP HEAD SCREW - BRASS PUMP
19	2	PUMP HEAD O-RING - BRASS PUMP

ISSUE	MODIFICATION	DATE	ECR No.
09	CHANGE FROM PARTS TO SPARES KITS. ADD SHEET 2.	30.05.18	858
08	DELETE MG027 & MS069. ADD MG10651.	08.08.17	810
07	UPDATE CAPACITORS, IMPELLERS AND ANTI-VIBRATION FEET	07.09.16	764
06	ADD BP448 PRESSURE SWITCH	20.01.16	734
05	UPDATE CAPACITOR FOR STN-2.0 B	01.10.15	723
04	UPDATE CAPACITOR FOR SSN-2.0 B & SSN-3.0 B	31.03.14	666
03	UPDATE CAPACITORS FOR STN-1.5 B & STN-2.0 B	08.01.14	648
02	UPDATE REED SWITCH, FLOW SWITCH TOWER, CAPACITORS & IMPELLERS	28.11.12	587
01	ORIGINAL ISSUE	20.08.09	411

THIS DRAWING IS THE PROPERTY OF GRUNDFOS WATERMILL LTD. AND MUST NOT BE PASSED ON TO ANY PERSON OR BE COPIED OR OTHERWISE UTILISED WITHOUT WRITTEN PERMISSION FROM GRUNDFOS WATERMILL LTD. © 2009 GRUNDFOS WATERMILL LTD.

SYMBOLS & ABBREVIATIONS

//	PARALLEL
⊥	PERPENDICULAR
◎	CONCENTRIC
℄	CENTRE LINE
P.C.D.	PITCH CIRCLE DIAMETER

TOLERANCES:
LINEAR: X ±0.5
0.X ±0.2
0.XX ±0.1
ANGULAR: ±0.5 DEG

	NAME	DATE
DRAWN	R.P.	20.08.09
CHK'D		

DO NOT SCALE DRAWING
DIMENSIONS IN MILLIMETRES

FINISH:

DEBUR AND BREAK SHARP EDGES

MATERIAL:

GRUNDFOS WATERMILL
Gemini House, Enterprise Way, Edenbridge. Kent. TN8 6HF.

TITLE: EXPLODED PARTS VIEW - BRASS UNIVERSAL HEAD PUMP IRELAND - SPARES

DWG NO. 10032

SHEET SIZE A2

SCALE:

SHEET 2 OF 2