THIRD ANGLE PROJECTION

SPARE PARTS KITS - STP & SSP BRASS POSITIVE HEAD PUMPS - IRELAND

99224226 - STP / SSP / STN / SSN PUMP HEAD & IMPELLER - 1.5 BAR

ITEM No.	QTY.	DESCRIPTION
13	1	PUMP HEAD - BRASS
12	4	PUMP HEAD SCREW - BRASS PUMP
15	1	PUMP HEAD O-RING - BRASS PUMP
14	1	IMPELLER - 1.5 BAR - STN-1.5 B
16	1	WOODRUFF KEY

99224227 - STP / SSP / STN / SSN PUMP HEAD & IMPELLER - 2.0 BAR

ITEM No.	QTY.	DESCRIPTION
13	1	PUMP HEAD - BRASS
12	4	PUMP HEAD SCREW - BRASS PUMP
15	1	PUMP HEAD O-RING - BRASS PUMP
14	1	IMPELLER - 2.0 BAR - STN-2.0 B & SSN-2.0 B
16	1	WOODRUFF KEY

99224229 - STP / SSP / STN / SSN PUMP HEAD & IMPELLER - 3.0 BAR

ITEM No.	QTY.	DESCRIPTION
13	1	PUMP HEAD - BRASS
12	4	PUMP HEAD SCREW - BRASS PUMP
15	1	PUMP HEAD O-RING - BRASS PUMP
14	1	IMPELLER - 3.0 BAR - STN-3.0 B & SSN-3.0 B
16	1	WOODRUFF KEY

99224230 - STP / SSP / STN / SSN PUMP HEAD & IMPELLER - 4.0 BAR

ITEM No.	QTY.	DESCRIPTION
13	1	PUMP HEAD - BRASS
12	4	PUMP HEAD SCREW - BRASS PUMP
15	1	PUMP HEAD O-RING - BRASS PUMP
14	1	IMPELLER - 4.0 BAR - STN-4.0 B
16	1	WOODRUFF KEY

99224231 - STP / SSP / STN / SSN STRAINER HOUSING TOWER

ITEM No.	QTY.	DESCRIPTION
5	1	STRAINER HOUSING - BRASS
2	1	COLLET SET 22mm
6	1	BONDED SEAL
3	1	STRAINER BASKET

99224232 - STP / SSP / STN / SSN FLOW SWITCH HOUSING TOWER

ITEM No.	QTY.	DESCRIPTION
4	1	FLOW SWITCH HOUSING - BRASS - WITH FLOAT
2	1	COLLET SET 22mm
6	1	BONDED SEAL
7	1	REED SWITCH + CABLE TIES

99224233 - STP / SSP PCB, CAPACITOR 10µF, REED SWITCHES & MAINS CABLE - 1.5, 2.0 & 3.0 BAR PUMPS

ITEM No.	QTY.	DESCRIPTION
9	1	PCB - BRASS POSITIVE HEAD
10	1	CAPACITOR - 10µF
7	2	REED SWITCH + CABLE TIES
8	1	MAINS CABLE - BRASS PUMP

99224235 - STP PCB, CAPACITOR 16µF, REED SWITCHES & MAINS CABLE - 4.0 BAR PUMPS

ITEM No.	QTY.	DESCRIPTION
9	1	PCB - BRASS POSITIVE HEAD
10	1	CAPACITOR - 16µF
7	2	REED SWITCH + CABLE TIES
8	1	MAINS CABLE - BRASS PUMP

99466755 - STP / STN FLEXIBLE HOSE SET (IRELAND - 3/4" BSP METAL NUT)

ITEM No.	QTY.	DESCRIPTION
1	4	HOSE - 22mm PLASTIC STANDPIPE (3/4" BSP METAL NUT)
11	1	HOSE WASHER SET (2 STRAINER WASHERS & 2 PLAIN WASHERS)

99466756 - SSP / SSN FLEXIBLE HOSE SET (IRELAND - 3/4" BSP METAL NUT)

ITEM No.	QTY.	DESCRIPTION
1	2	HOSE - 22mm PLASTIC STANDPIPE (3/4" BSP METAL NUT)
11	1	HOSE WASHER SET (2 STRAINER WASHERS & 2 PLAIN WASHERS)

99224247 - STP / SSP / STN / SSN ANTI VIBRATION FOOT (UP TO APRIL 2016) & PUMP HEAD O-RING

ITEM No.	QTY.	DESCRIPTION
17	2	ANTI-VIBRATION FOOT - BRASS PUMP UP TO APRIL 2016
12	8	PUMP HEAD SCREW - BRASS PUMP
15	2	PUMP HEAD O-RING - BRASS PUMP

99224249 - STP / SSP / STN / SSN ANTI VIBRATION FOOT (MAY 2016 TO JANUARY 2017) & PUMP HEAD O-RING

ITEM No.	QTY.	DESCRIPTION
17	2	ANTI-VIBRATION FOOT - BRASS PUMP MAY 2016 TO JANUARY 2017
12	8	PUMP HEAD SCREW - BRASS PUMP
15	2	PUMP HEAD O-RING - BRASS PUMP

99224250 - STP / SSP / STN / SSN ANTI VIBRATION FOOT (FROM FEBRUARY 2017) & PUMP HEAD O-RING

ITEM No.	QTY.	DESCRIPTION
17	2	ANTI-VIBRATION FOOT - BRASS PUMP FROM FEBRUARY 2017
12	8	PUMP HEAD SCREW - BRASS PUMP
15	2	PUMP HEAD O-RING - BRASS PUMP

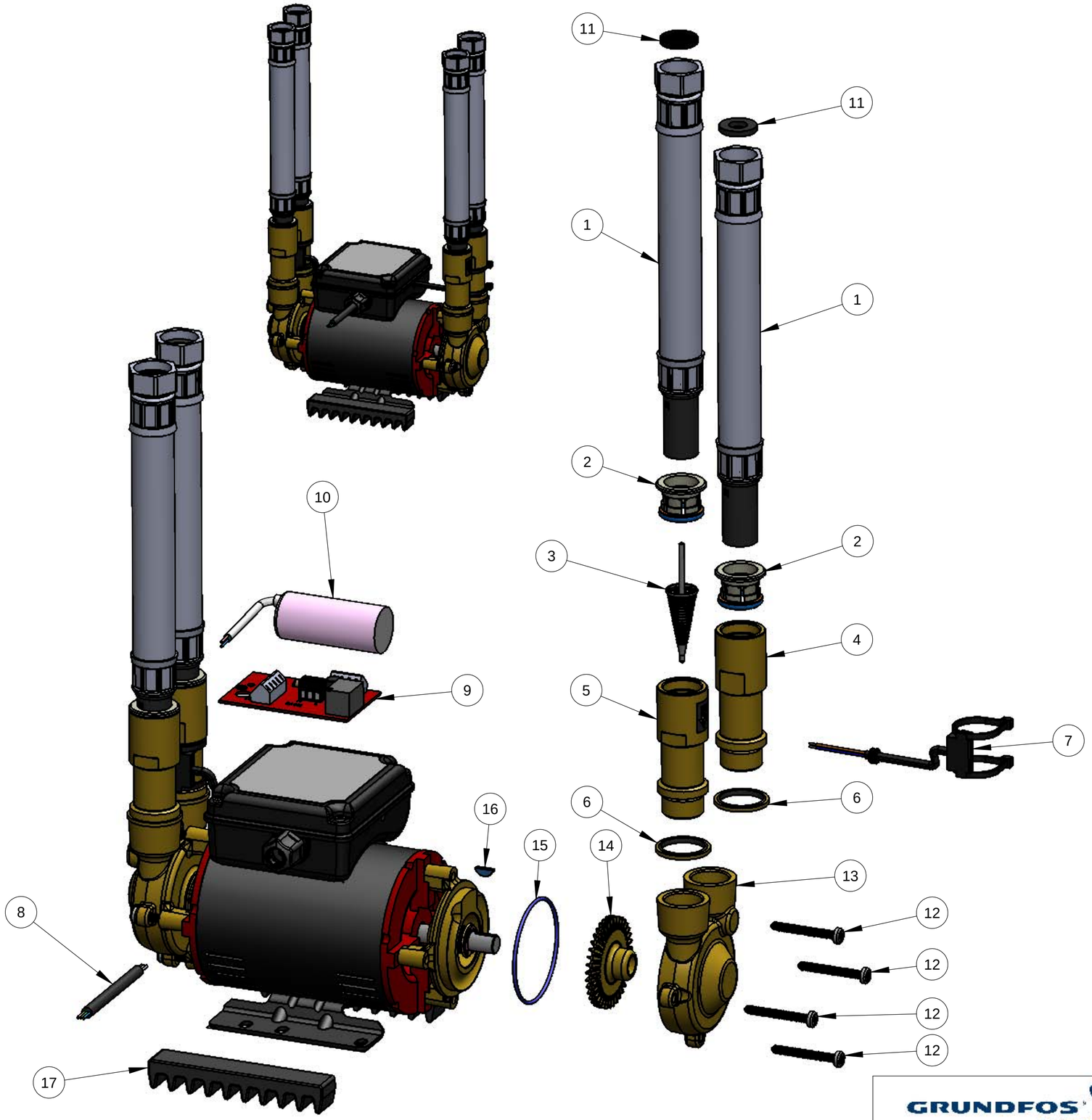

ISSUE	MODIFICATION	DATE	ECR No.
08	CHANGE FROM PARTS TO SPARES KITS.	30.05.18	858
07	DELETE MG027 & MS069. ADD MG10651.	08.08.17	810
06	UPDATE CAPACITORS, IMPELLERS AND ANTI-VIBRATION FEET	07.09.16	764
05	UPDATE CAPACITOR FOR STP-2.0 B	01.10.15	723
04	UPDATE CAPACITOR FOR SSP-2.0 B & SSP-3.0 B	31.03.14	666
03	UPDATE CAPACITORS FOR STP-1.5 B & STP-2.0 B	08.01.14	648
02	UPDATE REED SWITCH, FLOW SWITCH TOWER, CAPACITORS & IMPELLERS	28.11.12	587
01	ORIGINAL ISSUE	20.08.09	411

THIS DRAWING IS THE PROPERTY OF GRUNDFOS WATERMILL LTD. AND MUST NOT BE PASSED ON TO ANY PERSON OR BE COPIED OR OTHERWISE UTILISED WITHOUT WRITTEN PERMISSION FROM GRUNDFOS WATERMILL LTD.
© 2009 GRUNDFOS WATERMILL LTD.

SYMBOLS & ABBREVIATIONS

//	PARALLEL
⊥	PERPENDICULAR
◎	CONCENTRIC
℄	CENTRE LINE
P.C.D.	PITCH CIRCLE DIAMETER

TOLERANCES:
LINEAR: X ±0.5
0.X ±0.2
0.XX ±0.1
ANGULAR: ±0.5 DEG

	NAME	DATE
DRAWN	R.P.	20.08.09
CHK'D	J.H.	11.06.18

DO NOT SCALE DRAWING
DIMENSIONS IN MILLIMETRES

FINISH:

DEBUR AND BREAK SHARP EDGES

MATERIAL:

GRUNDFOS WATERMILL
Gemini House, Enterprise Way, Edenbridge. Kent. TN8 6HF.

TITLE: EXPLODED PARTS VIEW - BRASS POSITIVE HEAD PUMP IRELAND - SPARES

DWG NO. 10030

SHEET SIZE A2

SCALE:1:2

SHEET 1 OF 1