THIRD ANGLE PROJECTION

SPARE PARTS KITS - STR & SSR REGEN PUMPS - IRELAND

99224170 - STR PUMP HEAD - LEFT HAND

ITEM No.	QTY.	DESCRIPTION
3	1	PUMP HEAD MOULDING - REGEN - WITH FLOAT AND REED SWITCH
6	6	PUMP HEAD SCREW - REGEN PUMP
5	1	PUMP HEAD O-RING - REGEN PUMP
7	1	IMPELLER - REGEN PUMP

99224171 - STR / SSR PUMP HEAD - RIGHT HAND

ITEM No.	QTY.	DESCRIPTION
4	1	PUMP HEAD MOULDING - REGEN - WITH FLOAT AND REED SWITCH
6	6	PUMP HEAD SCREW - REGEN PUMP
5	1	PUMP HEAD O-RING - REGEN PUMP
7	1	IMPELLER - REGEN PUMP

99224172 - STR / SSR PCB, CAPACITOR & MAINS CABLE

ITEM No.	QTY.	DESCRIPTION
9	1	PCB - REGEN PUMP
10	1	CAPACITOR - 8µF
8	1	MAINS CABLE - REGEN PUMP

99466738 - STR FLEXIBLE HOSE SET (IRELAND - 3/4" BSP METAL NUT)

ITEM No.	QTY.	DESCRIPTION
1	4	HOSE - 15mm STRAIGHT (3/4" BSP METAL NUT)
2	1	HOSE WASHER SET (2 STRAINER WASHERS & 6 PLAIN WASHERS)

99466741 - SSR FLEXIBLE HOSE SET (IRELAND - 3/4" BSP METAL NUT)

ITEM No.	QTY.	DESCRIPTION
1	2	HOSE - 22mm PLASTIC STANDPIPE (3/4" BSP METAL NUT)
2	1	HOSE WASHER SET (2 STRAINER WASHERS & 6 PLAIN WASHERS)

99224196 - STR / SSR ANTI VIBRATION FOOT & PUMP HEAD O-RING

ITEM No.	QTY.	DESCRIPTION
11	2	ANTI-VIBRATION FOOT - REGEN PUMP
6	12	PUMP HEAD SCREW - REGEN PUMP
5	2	PUMP HEAD O-RING - REGEN PUMP

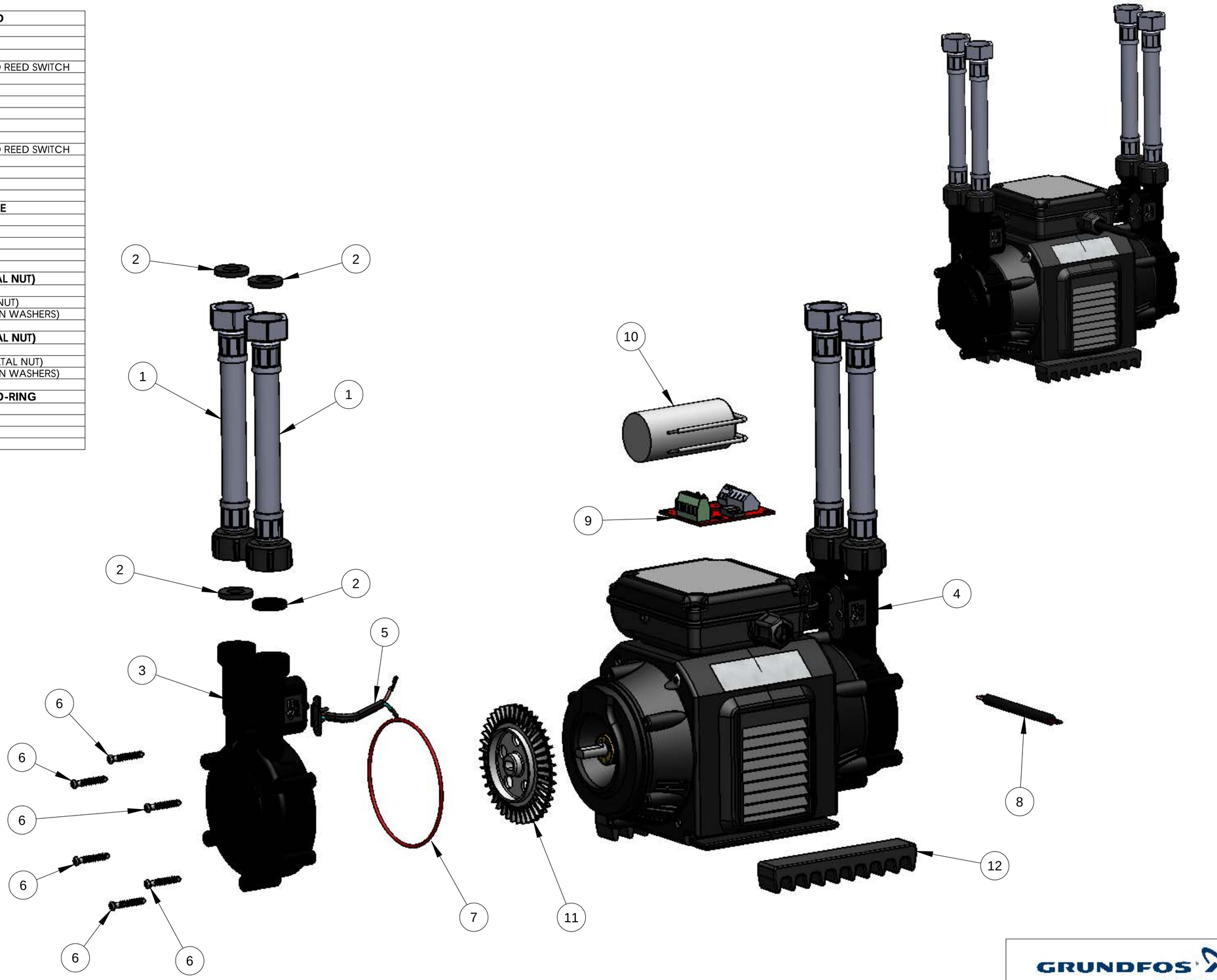

ISSUE	MODIFICATION	DATE	ECR No.
02	CHANGE FROM PARTS TO SPARES KITS	30.05.18	858
01	ORIGINAL ISSUE	18.08.09	411

THIS DRAWING IS THE PROPERTY OF GRUNDFOS WATERMILL LTD. AND MUST NOT BE PASSED ON TO ANY PERSON OR BE COPIED OR OTHERWISE UTILISED WITHOUT WRITTEN PERMISSION FROM GRUNDFOS WATERMILL LTD.
© 2009 GRUNDFOS WATERMILL LTD.

SYMBOLS & ABBREVIATIONS	
//	PARALLEL
⊥	PERPENDICULAR
◎	CONCENTRIC
℄	CENTRE LINE
P.C.D.	PITCH CIRCLE DIAMETER

TOLERANCES:
LINEAR: X ±0.5
0.X ±0.2
0.XX ±0.1
ANGULAR: ±0.5 DEG

	NAME	DATE
DRAWN	R.P.	18.08.09
CHK'D	J.H.	11.06.18

DO NOT SCALE DRAWING
DIMENSIONS IN MILLIMETRES

FINISH:

DEBUR AND BREAK SHARP EDGES

MATERIAL:

GRUNDFOS WATERMILL
Gemini House, Enterprise Way,
Edenbridge. Kent. TN8 6HF.

TITLE: EXPLODED PARTS VIEW - REGEN PUMP - IRELAND - SPARES

DWG NO. 10025

SHEET SIZE A2

SCALE:1:2

SHEET 1 OF 1