UNOLIFT, DUOLIFT

Installation and operating instructions

GRUNDFOS

UNOLIFT, DUOLIFT

English (GB)
Installation and operating instructions 5

Български (BG)
Упътване за монтаж и експлоатация 36

Čeština (CZ)
Montážní a provozní návod 69

Deutsch (DE)
Montage- und Betriebsanleitung 100

Dansk (DK)
Monterings- og driftsinstruktion 133

Eesti (EE)
Paigaldus- ja kasutusjuhend 165

Español (ES)
Instrucciones de instalación y funcionamiento 196

Suomi (FI)
Asennus- ja käyttöohjeet 228

Français (FR)
Notice d'installation et de fonctionnement 260

Ελληνικά (GR)
Οδηγίες εγκατάστασης και λειτουργίας 292

Magyar (HU)
Telepítési és üzemeltetési utasítás 325

Italiano (IT)
Istruzioni di installazione e funzionamento 357

Lietuviškai (LT)
Įrengimo ir naudojimo instrukcija 389

Latviešu (LV)
Uzstādīšanas un ekspluatācijas instrukcija 421

Nederlands (NL)
Installatie- en bedieningsinstructies 454

Polski (PL)
Instrukcja montażu i eksploatacji 486

Português (PT)
Instruções de instalação e funcionamento 518

Română (RO)
Instrucţiuni de instalare şi utilizare 549

Svenska (SE)
Monterings- och driftsinstruktion 581

Türkçe (TR)
Montaj ve kullanım kılavuzu 612

Українська (UA)
Інструкції з монтажу та експлуатації 647

中文 (CN)
安装和使用说明书 680

Appendix A 711

Original installation and operating instructions

Table of contents

1. General information 6
1.1 Hazard statements 6
1.2 Notes 6
1.3 Symbols on the product. 6

2. Receiving the product. 7
2.1 Transporting the product 7
2.2 Inspecting the product 7
2.3 Scope of delivery 7

3. Installing the product 12
3.1 General guidelines 12
3.2 Mechanical installation 13
3.3 Tools. 14
3.4 Installation overview 14
3.5 Positioning the product 14
3.6 Installing the tank 14
3.7 Drilling holes for the pipes 15
3.8 Fitting the cable glands 15
3.9 Fitting the vent port 15
3.10 Connecting the vent pipe 16
3.11 Connecting the inlet pipes 16
3.12 Installing the pump 16
3.13 Installing the pump connecting pipes. 17
3.14 Installing the level sensor tube 22
3.15 Installing an alarm float switch 22
3.16 Installing the outlet pipes 22
3.17 Installing a diaphragm pump 24
3.18 Installing the controller 24
3.19 Electrical connection 24
3.20 Setting the controller before startup 25

4. Starting up the product 25
4.1 Starting up a product with a controller 25
4.2 Starting up a product without a controller . . 25

5. Storing the product 26

6. Product introduction 26
6.1 Product overview 26
6.2 Applications 27
6.3 Pumped liquids 27
6.4 Automatic operation. 27
6.5 Identification. 27
6.6 Diaphragm pump 28
6.7 Level sensor tube 28

7. Operating the product. 28
7.1 Setting the start levels 28

8. Starting up the product after standstill . . 31

9. Servicing the product 31

10. Taking the product out of operation 32

11. Technical data 33
11.1 Operating conditions 33
11.2 Material 33
11.3 Electrical data 33
11.4 Dimensions and weights 33

12. Fault finding the product 34
12.1 The pump does not start. 34
12.2 The pump does not stop. 34
12.3 The pump starts and stops randomly. 34
12.4 The tank is not emptying although the pump is running. 34
12.5 The pump makes an unusual sound.. 35

13. Disposing of the product 35

1. General information

This appliance can be used by children aged from 8 years and above and persons with reduced physical, sensory or mental capabilities or lack of experience and knowledge if they have been given supervision or instruction concerning use of the appliance in a safe way and understand the hazards involved.

Children shall not play with the appliance. Cleaning and user maintenance shall not be made by children without supervision.

Read this document before you install the product. Installation and operation must comply with local regulations and accepted codes of good practice.

1.1 Hazard statements

The symbols and hazard statements below may appear in Grundfos installation and operating instructions, safety instructions and service instructions.

DANGER

Indicates a hazardous situation which, if not avoided, will result in death or serious personal injury.

WARNING

Indicates a hazardous situation which, if not avoided, could result in death or serious personal injury.

CAUTION

Indicates a hazardous situation which, if not avoided, could result in minor or moderate personal injury.

The hazard statements are structured in the following way:

SIGNAL WORD

Description of the hazard

Consequence of ignoring the warning

- Action to avoid the hazard.

1.2 Notes

The symbols and notes below may appear in Grundfos installation and operating instructions, safety instructions and service instructions.

Observe these instructions for explosion-proof products.

A blue or grey circle with a white graphical symbol indicates that an action must be taken.

A red or grey circle with a diagonal bar, possibly with a black graphical symbol, indicates that an action must not be taken or must be stopped.

If these instructions are not observed, it may result in malfunction or damage to the equipment.

Tips and advice that make the work easier.

1.3 Symbols on the product

European conformity

2. Receiving the product

2.1 Transporting the product

WARNING
Falling objects
Death or serious personal injury

- Secure the product during transportation to prevent it from tilting or falling down.

CAUTION
Back injury
Minor or moderate personal injury

- Get assistance from another person or use lifting equipment to carry the product.

CAUTION
Crushing of feet
Minor or moderate personal injury

- Wear safety shoes when moving the product.

2.2 Inspecting the product

1. Check that the product is as ordered.
2. Check that no visible parts have been damaged.
3. If parts are damaged or missing, contact your local Grundfos sales company and refer to the product numbers in section Scope of delivery.

Related information

2.3 Scope of delivery

2.3 Scope of delivery

The scope of delivery depends on your order. Pumps, tank and pipes are supplied separately and must be assembled.

If used for a liquid which is injurious to health or toxic, the pump will be classified as contaminated.

Before the pump is returned to Grundfos for service, the safety declaration at the end of these instructions must be filled in by authorised personnel and attached to the pump in a visible position.

If Grundfos is requested to service the pump, it must be cleaned before it is returned.

If proper cleaning is not possible, all relevant information about the pumped liquid must be provided.

If the above is not fulfilled, Grundfos can refuse to accept the pump for service.

Possible costs of returning the pump are to be paid by the customer.

The safety declaration can be found at the end of these instructions (only in English).

2.3.1 Description of kits

Tank		
Designation	**Quantity**	
	270 litres	**540 litres**
Tank	1	1
Cover with gasket	1	2
Screw, M8 × 30	12	24
Washer	12	24
Fastening bracket for level sensor tube	2	2
Screw for fixing the tank	4	4
Expansion anchor for fixing the tank	4	4
Socket seal, DN 40	1	1
Socket seal, DN 100	1	1

Pump connecting pipes				
Designation		**Quantity**		
		KP/CC	**SEG**	**APB**
Adapter, Rp 2 - R 1 1/2	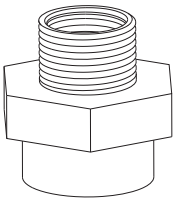	1	1	-
Double nipple, R 2 - R 2	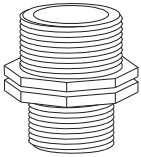	1	1	1
Nut, PVC, 2"	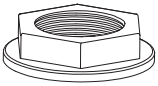	1	1	1
O-ring, ∅60, EPDM		-	-	1

Pump connecting pipes				
Designation		**Quantity**		
		KP/CC	**SEG**	**APB**
Adapter	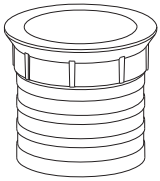	2	-	-
Stainless-steel clamp	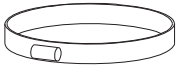	2	2	2
Flexible connecting tube, ∅50		1	1	1
Elbow, 90°	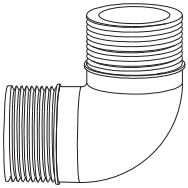	-	1	1
Flange, ∅50		-	1	-
Screw for flange	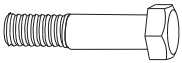	-	4	-
Washer for flange		-	8	-
Nut, M16, for flange		-	4	-
O-ring, ∅50, for flange		-	1	-

Pump connecting pipes			
Designation	**Quantity**		
	KP/CC	**SEG**	**APB**
UNILIFT KP: Double nipple 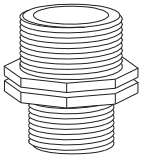	1	-	-
UNILIFT CC: Adapter 1 1/2" - 1 1/4" 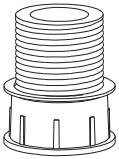	1	-	-
UNILIFT KP: Non-return flap valve	1*	-	-
Thread tape	1	1	1
Fitting, 2", ∅50	-	1	1
Fitting, 90°, 2", ∅50	-	1	-
Fitting, 90°, 1 1/2", ∅50	-	1	-
Tube, ∅50	-	1	1
Threaded rod M8	-	1**	-
Pipe clamp M8	-	2**	-
Vent port			
Socket, PVC, 75 × 63 × 2"	1	1	1
Gasket, EPDM, ∅63 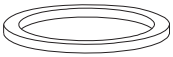	1	1	1
Nut, PVC, 2" 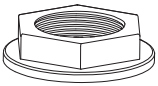	1	1	1
Other components			
Schuko plug	1	-	1
Cable gland, M20	2	1	2
Cable gland, M25	-	1	-

* The kit for pump connecting pipes contains a non-return valve for the UNILIFT KP pump. The UNILIFT CC pump is supplied with a non-return valve.

** The threaded rod M8 and pipe clamp M8 parts are only for DUOLIFT SEG pumps.

Accessories

We recommend the following accessories.

Outlet pipe					
Designation		**Quantity**			
		UNOLIFT		**DUOLIFT**	
		CC/KP	**APB/SEG**	**CC/KP**	**APB/SEG**
Non-return valve	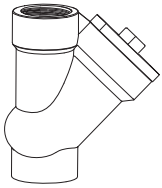	-*	1	-*	2
Double nipple	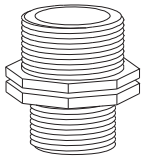	-	1	3	5
Isolating valve	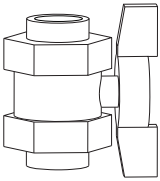	1	1	1	1
Union nut	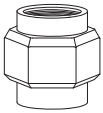	-	-	2	2
T-piece, PVC, 90°	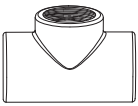	-	-	1	1
Elbow, PVC, 90°	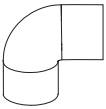	-	-	2	2
Pipe, ∅50, 2 m		-	-	1	1
Thread tape		1	1	1	1

* The UNILIFT CC pump is supplied with a non-return valve.

3. Installing the product

3.1 General guidelines

The guidelines for correct mechanical installation of lifting station are according to EN 12056-4.

- If the lifting station is installed in a basement with recurrent penetration of groundwater, we recommend that you install a drainage pump in a separate pump sump below floor level. In some countries the drainage pump is mandatory. If there is only a risk of penetrating groundwater, we recommend that you install a float switch outside the lifting station and connect it to a controller which indicates high-level alarm in case of flooding.
- Fix the tank to the floor.
- We recommend that you connect a diaphragm pump to the tank to be able to empty the tank manually.
- All outlet pipes from the lifting station, diaphragm pump and drainage pump must have a backflow loop, i.e. a bend above the local backflow level. Commonly, the highest point of the bend must be above street level. See fig. 2 Installation example with a tank on the basement floor. The diaphragm pump is not shown.
- Surface water must not be discharged into the lifting station inside the building. Collect and discharge surface water outside the building.
- Install a non-return valve at the outlet of the lifting station to prevent backflow.
- Fit isolating valves at the inlet and outlet of the lifting station.
- The volume of the outlet pipe above the non-return valve up to the backflow loop must be smaller than the effective tank volume. See pos. 7 in fig. *Installation example with a tank in a sump and with a controller. The diaphragm pump is not shown.* and fig. *Installation example with a tank on the basement floor. The diaphragm pump is not shown.*
- In general, a lifting station for black wastewater must be vented above roof level. However, it is permitted to lead the vent pipe into the main building ventilation system. Place special two-way venting valves outside the building.
- If the wastewater is discharged into a collecting line, the collecting line must have a filling ratio of at least h/d = 0.7. The collecting line must be at least one nominal diameter bigger after the outlet pipe connection.
- Use 45° bends to avoid deposits in the pipes.

Related information

3.2.2 Location

3.2 Mechanical installation

3.2.1 Tank inlets

We recommend that you connect the inlet pipes to the top inlets of the tank. This prevents backflow and deposits in the inlet pipe, and enables a high start level of the pump. A high start level increases the effective tank volume and reduces the number of start/stops of the pumps.

3.2.2 Location

Install the lifting station in a properly lit and vented room with 60 cm free space around all parts to be serviced and operated.

The tank must not be exposed to direct sunlight. UV light can affect the properties of its composite material, resulting in a shorter life.

The product is designed for indoor operation. If installed outside, the lifting station must be placed in a closed pit.

The tank can be flooded and may be installed in a basement with risk of penetrating groundwater.

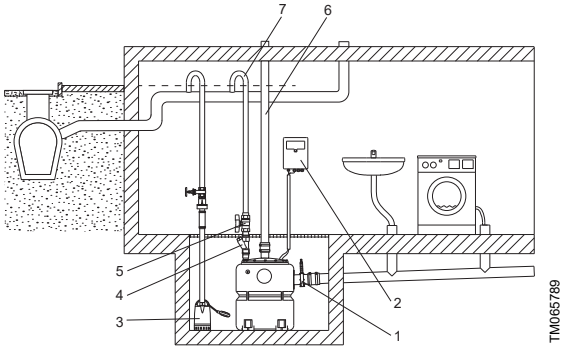

Pos.	Designation
1	Isolating valve, inlet
2	Controller
3	Drainage pump
4	Non-return valve, outlet
5	Isolating valve, outlet
6	Vent pipe
7	Backflow loop

Installation example with a tank in a sump and with a controller. The diaphragm pump is not shown.

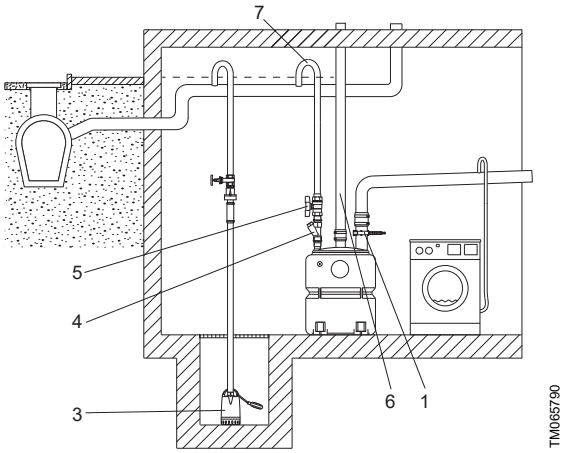

Pos.	Designation
1	Isolating valve, inlet
3	Drainage pump
4	Non-return valve, outlet
5	Isolating valve, outlet
6	Vent pipe
7	Backflow loop

Installation example with a tank on the basement floor. The diaphragm pump is not shown.

3.3 Tools

- Thread tape
- glue.

Not supplied with the product:

- drilling machine
- drilling bits: ∅20, ∅25
- hole saw: ∅40, ∅100
- deburring tool for polyethylene.

3.4 Installation overview

Depending on your product type, you must go through different steps to install your lifting station. You may need to go through additional steps if you have ordered accessories.

Lifting station with pumps with float switches

1. Fix the tank to the floor.
2. Drill holes for the inlet pipes.
3. Connect the inlet pipes to the tank.
4. Fit the vent port and the cable glands.
5. Set the start levels by adjusting the cable length of the float switch.
6. Install the pumps in the tank.
7. Fit the pump connecting pipes.
8. Connect the vent pipe.
9. Connect the outlet pipes.

Lifting station with controller

1. Fix the tank to the floor.
2. Drill holes for the inlet pipes.
3. Connect the inlet pipes to the tank.
4. Fit the vent port and the cable glands.
5. Install the pumps in the tank.
6. Fit the level sensor tube in the tank.
7. Fit the pump connecting pipes.
8. Connect the vent pipe.
9. Connect the outlet pipes.

3.5 Positioning the product

CAUTION
Back injury
Minor or moderate personal injury

- Get assistance from another person or use lifting equipment to carry the product.

CAUTION
Crushing of feet
Minor or moderate personal injury

- Wear safety shoes when moving the product.

Position the tank so that all components are easily accessible during operation and maintenance.

3.6 Installing the tank

Fix the tank to the floor to prevent uplift and twist. Use the mounting brackets to fix the tank with screws.

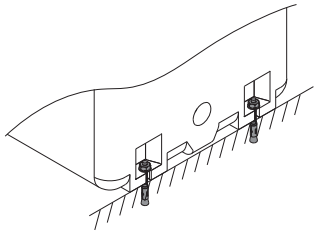

Fixing the tank to the floor

3.7 Drilling holes for the pipes

CAUTION
Sharp element
Minor or moderate personal injury
- Wear protective gloves.

The tank has three or four holes, ∅100, for the inlet pipes, depending on the size. The tank also has a hole, ∅40, for the diaphragm pump. See section Product overview. These holes must be drilled to be used.

Holes for the outlet pipes, the vent port and the minimum required cable glands are open.

1. Determine which inlets you want to use. See sections Tank inlets and Setting the start levels.
2. Drill holes with a hole saw. The diameter of the hole saw must be the same as the diameter of the pipe.

Inlet:	∅100
Hole for diaphragm pump:	∅40

3. Deburr the holes.

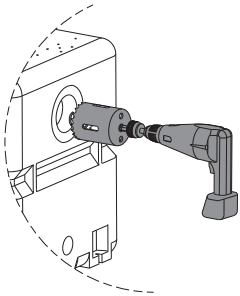

TM065851

Drilling holes for pipes

Related information

3.2.1 Tank inlets
6.1 Product overview
7.1 Setting the start levels

3.8 Fitting the cable glands

Choose the appropriate cable gland:

Cable gland for UNILIFT pumps:	M20
Cable gland for SEG pumps:	M25
Cable gland for level sensor hose:	M20

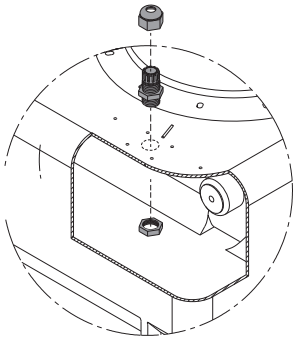

TM065779

Fitting the cable glands

3.9 Fitting the vent port

1. Fit the gasket on the socket.
2. Fit the nipple in the hole on top of the tank.
3. Fit the nut inside the tank and tighten it.

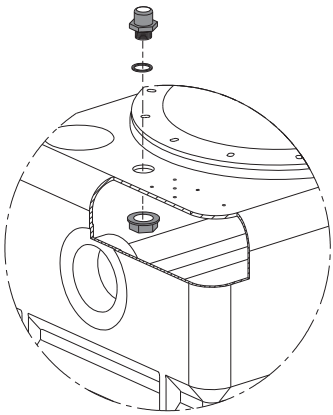

TM065924

Fitting the vent port

3.10 Connecting the vent pipe

The vent pipe is not supplied with the product.

You can connect your vent pipe to the vent port in three different ways:

- By means of a PVC vent pipe with an outer diameter of 63 mm and glue.
- By means of a flexible pipe connection with an inner diameter of 75 mm and with clamps. A flexible pipe connection with clamps is available as an accessory.
- By means of a PP double nipple with an inner diameter of 75 mm. The nipple must comply with EN 1451.

3.11 Connecting the inlet pipes

You can connect three or four inlet pipes to the tank, depending on the tank size. First you must drill the holes. See section Drilling holes for the pipes.

1. Fit the socket seal in the inlet.
2. Connect the isolating valve to the inlet pipe. The isolating valve is an accessory. Product number 96615831.
3. Insert the inlet pipe into the socket seal.

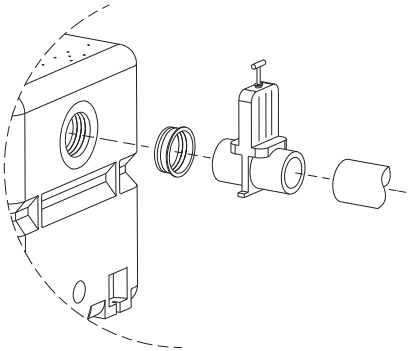

Connecting an inlet pipe with an isolating valve

Related information

3.7 Drilling holes for the pipes

3.12 Installing the pump

Pumps with float switches

Adjust the cable length of the float switch before you install the pump. See section Setting the start levels with float switches.

1. Remove the plug from the pump cable. You may need to cut the cable.
2. SEG: Fit the foot extensions. See fig. Fitting the foot extensions on the SEG pump.
3. Position the pump in the tank. Make sure that the float switch, if any, can move freely.

   UNILIFT CC, KP, APB: Position the pump between the three positioning dots at the bottom of the tank so that it stays in place during operation. See figures Correct position of UNILIFT CC and KP pumps and Correct position of UNILIFT APB pumps. SEG: The pump weight ensures that the pump stays in place.
4. Lead the pump cable through the cable gland of the tank.
5. Tighten the cable gland.

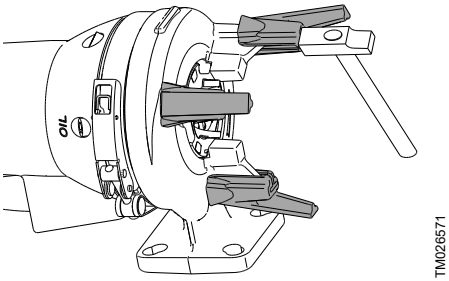

Fitting the foot extensions on the SEG pump

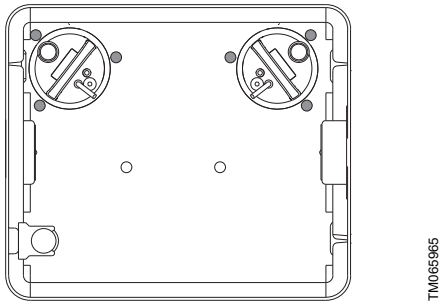

Correct position of UNILIFT CC and KP pumps

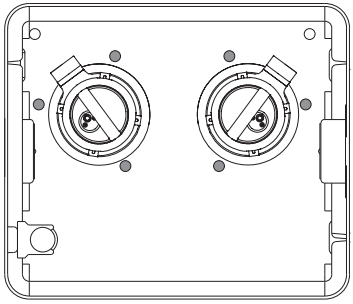

TM065966

Correct position of UNILIFT APB pumps

Related information

7.1.2 Setting the start levels with float switches

3.13 Installing the pump connecting pipes

3.13.1 Cutting the flexible tube

The connecting pipes are supplied with a flexible tube of ∅50. Cut the tube to a length according to the table below.

Pump type	Tube length [mm]
UNILIFT CC	240
UNILIFT KP	350
UNILIFT APB	423
UNILIFT APG	375
SEG	375

Pump type	PE tube length [mm]	Threaded rod M8 [mm] *
SEG	1 × 275 1 × 185	685 (540 L tank) 220 (270 L tank)
UNILIFT APB	1 × 270 1 × 185	
UNILIFT APG	1 × 275 1 × 185	685 (540 L tank) 220 (270 L tank)

* Only for double pump installation.

3.13.2 Assembling the pump connecting pipes

Use the thread tape in the kit to seal the threaded connections.

1. Assemble the connecting pipe outside the tank, except for the nut. See pos. 1 in fig. Example with UNILIFT KP pumps.
2. Connect the connecting pipe to the pump in the tank.
3. Connect the connecting pipe to the outlet of the tank. Make sure that the pump is in position and that the float switch, if any, can move freely before you tighten the nut.

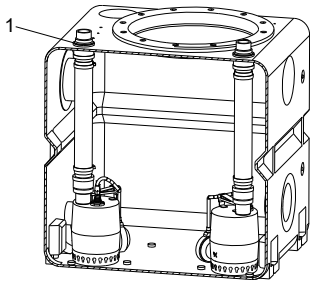

TM049563

Example with UNILIFT KP pumps

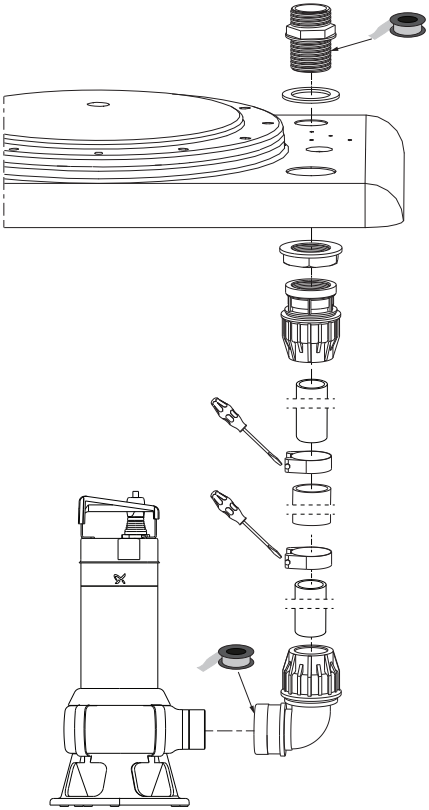

UNILIFT AP35B, AP50B

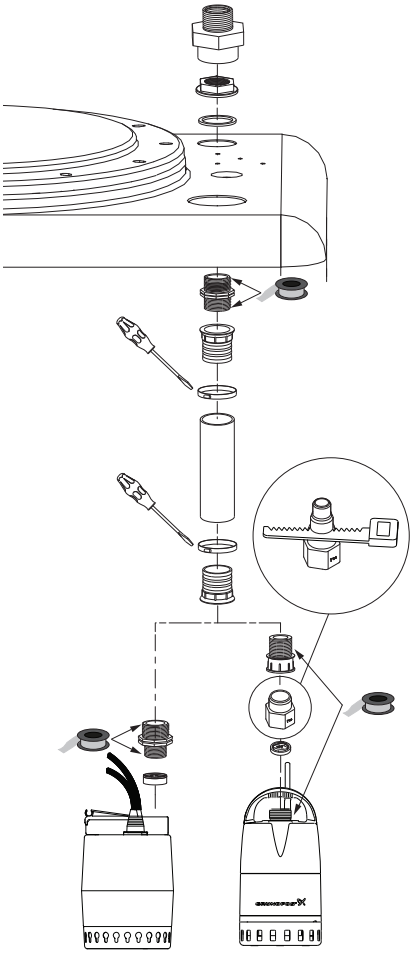

UNILIFT CC, KP

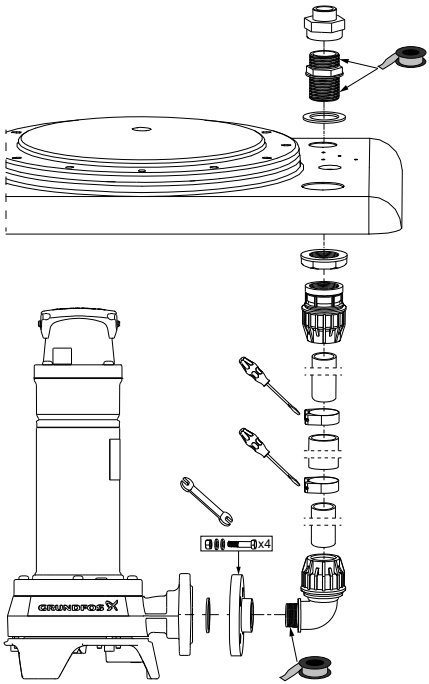

TM082793

UNILIFT APG

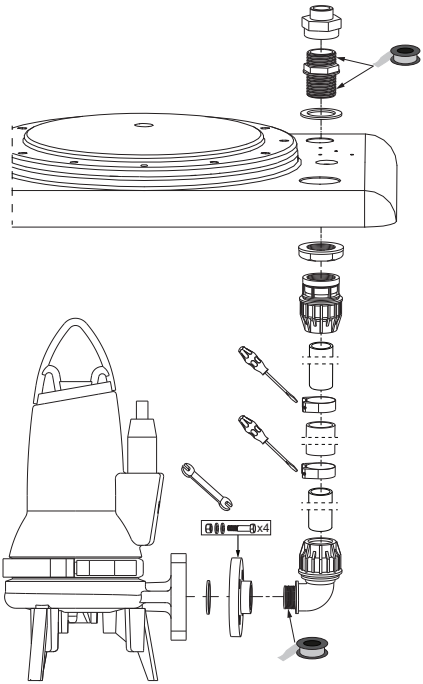

TM059632

SEG

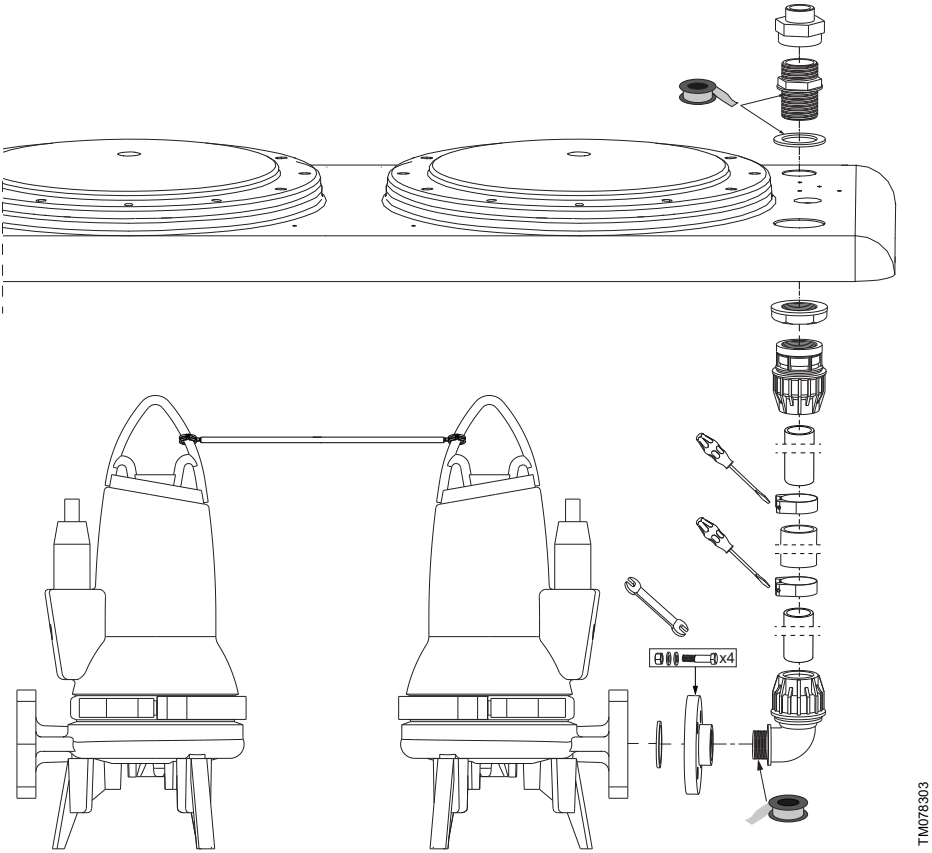

DUOLIFT SEG

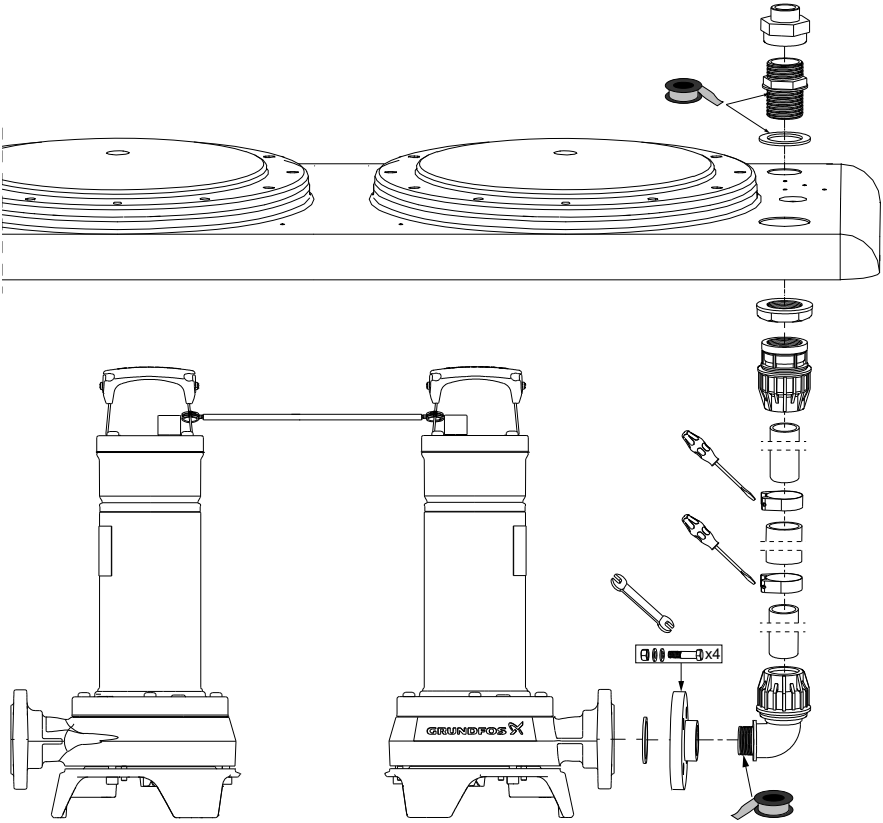

DUOLIFT UNILIFT APG

3.14 Installing the level sensor tube

If your pump is not equipped with a float switch, you must install a level sensor tube in the tank.

1. Fix the level sensor tube to the brackets inside the tank. The locking ring of the tube must be under the top bracket to prevent the tube from rising with the water level.
2. Lead the level sensor hose through the gland.
3. Tighten the gland.

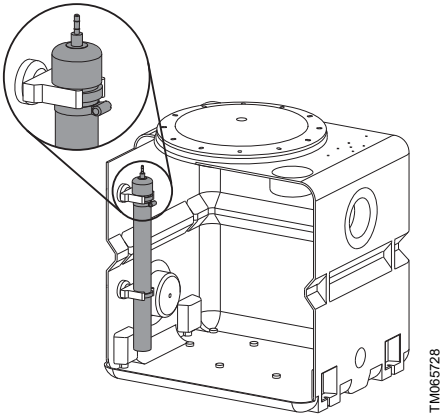

Correct positioning of the level sensor tube

3.15 Installing an alarm float switch

If you have an alarm device, you can install an additional float switch inside the tank and connect it to the alarm device in order to trigger a high-level alarm.

If you have an LC 220 or LC 221 controller, you do not need an additional alarm float switch as high-level alarm is triggered by the level sensor.

1. Fix the cable of the float switch to the pump connecting pipe with a cable tie.
   - Make sure that there is a free cable length of minimum 70 mm.
   - Make sure that the float switch can move freely from its lowest position to its highest position.
2. Tighten the cable tie.
3. Drill a hole, ∅20, for the cable gland.
4. Fit the cable gland. See fig. Fitting the cable glands.
5. Lead the cable of the float switch through the cable gland.
6. Tighten the cable gland.

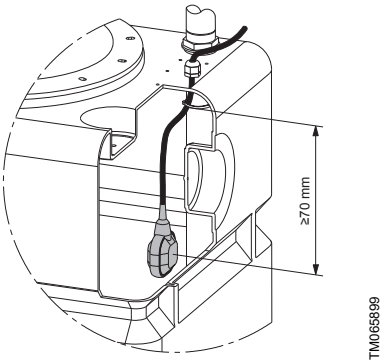

Alarm float switch

Related information

3.8 Fitting the cable glands

3.16 Installing the outlet pipes

The outlet pipes described in this section are accessories.

3.16.1 Cutting the pipe

This section applies to DUOLIFT. The outlet pipe kit includes a 2 metres' pipe ∅50. Cut the pipe into two pieces of according to the table below.

Model	Pipe length [mm]
DUOLIFT CC, KP, SEG, 270 L	2 × 180
DUOLIFT CC, KP, SEG, 540 L	2 × 430
DUOLIFT APB, 270 L	2 × 163
DUOLIFT APB, 540 L	2 × 413

3.16.2 Assembling the outlet pipes

See the drawings below.

Tips for DUOLIFT

1. Assemble the outlet pipes before connecting anything to the tank.
2. Connect the outlet pipes to the tank by tightening the two union nuts on the tank outlets. See pos. 1 in figures 18 and 20.

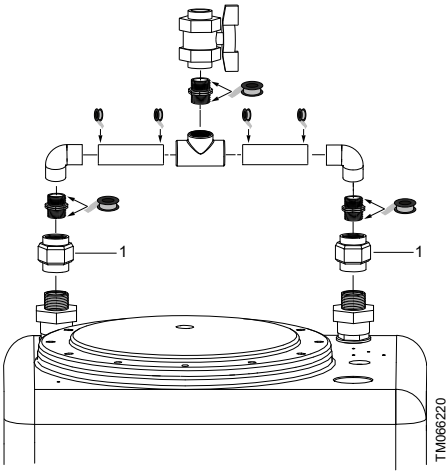

*Fig. 18 DUOLIFT CC, KP**

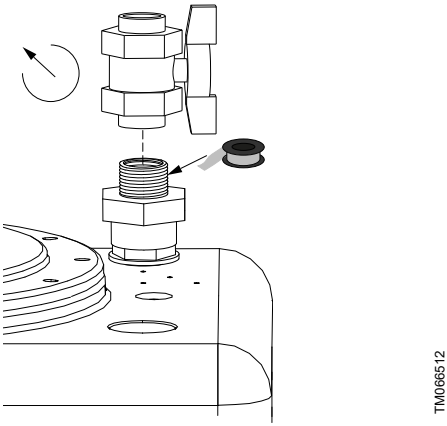

*Fig. 19 UNOLIFT CC, KP**

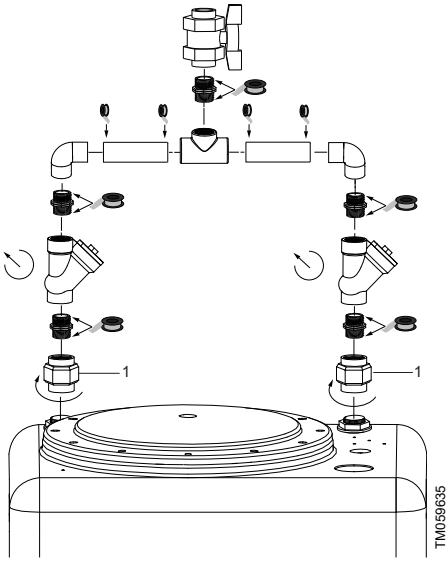

*Fig. 20 DUOLIFT APB, SEG***

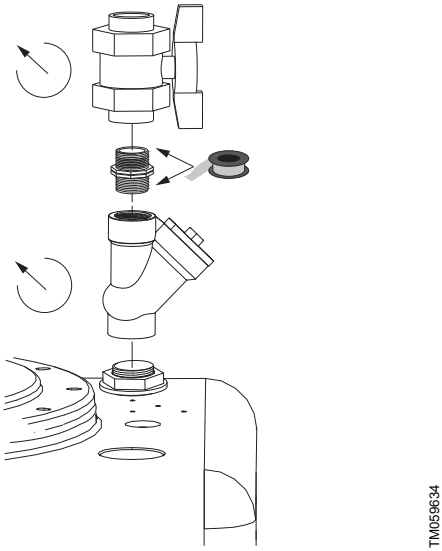

*Fig. 21 UNOLIFT APB, SEG***

* The UNILIFT CC pump is supplied with a non-return valve.

** The adapter Rp 2 - R 1 1/2 for DUOLIFT SEG is not shown on the drawing.

3.17 Installing a diaphragm pump

The diaphragm pump is optional.

1. Drill the outlet for the diaphragm pump. See section Drilling holes for the pipes.
2. Fit the DN 40 socket seal in the opening for the diaphragm pump at the bottom of the tank. See figures UNOLIFT 270 / DUOLIFT 270 and DUOLIFT 540.
3. Insert the pipe from the diaphragm pump into the outlet.
4. Secure the diaphragm pump and connect it to the building outlet pipe according to the installation and operating instructions of the pump.

Related information

3.7 Drilling holes for the pipes

6.1 Product overview

3.18 Installing the controller

Mount the controller on a wall with screws through the mounting holes of the back plate.

The cable entries must point downwards, and the user interface must be easily accessible.

See the installation and operating instructions of the controller.

3.19 Electrical connection

DANGER
Electric shock
Death or serious personal injury

- Before starting any work on the product, make sure that the power supply has been switched off and that it cannot be accidentally switched on.

DANGER
Electric shock
Death or serious personal injury

- The protective earth (PE) of the power outlet must be connected to the protective earth of the product. The plug must have the same PE connection system as the power outlet.

DANGER
Electric shock
Death or serious personal injury

- The installation must be fitted with a residual current device (RCD) with a tripping current less than 30 mA.

DANGER
Electric shock
Death or serious personal injury

- The product must be connected to an external main switch with a minimum contact gap of 3 mm (0.12 inch) in all poles.

3.19.1 Connecting the pump

Connecting the pump to a power socket

1. Lead the pump cable through the cable gland.
2. Fit the power plug on the cable. A Schuko plug is supplied with the product.
3. Insert the plug into a power socket.

Connecting the pump to a controller

1. Lead the pump cable through the cable gland.
2. Connect the pump cable to the controller. See the wiring diagram supplied with the controller.

3.19.2 Connecting the level sensor hose to the controller

Connect the level sensor hose to the pneumatic entry in the bottom of the controller. The hose is connected properly when it is pushed all the way in and locked in position.

3.19.3 Connecting an alarm float switch to the controller

1. Lead the cable of the float switch through one of the M20 cable glands in the bottom of the controller.
2. Connect the cable to the terminal for high-level alarm. See the installation and operating instructions of the controller.

3.20 Setting the controller before startup

LC 220

Select settings via the DIP switches. See the installation and operating instructions of the controller.

LC 221

You must set the start level and rated current of the motor to be able to start the product. All other settings are preset.

1. Close the isolating valves.
2. Set the selector switches on the controller to "OFF".
3. Switch on the controller.
4. When the display shows "L_01", press [OK] to enter the start level menu.
5. Select the start level using the left and right arrows and press [OK]. See section Setting the start levels with a controller.
6. Go to the rated current menu "L_02" using the left and right arrows and select the rated motor current [A] according to the nameplate of the pump motor.

You can change some factory settings. See the installation and operating instructions of the controller.

LC 220

QR98503253

http://net.grundfos.com/qr/i/98503253

LC 221

QR98503252

http://net.grundfos.com/qr/i/98503252

Related information

7.1.1 Setting the start levels with a controller

4. Starting up the product

4.1 Starting up a product with a controller

Make sure that the controller is set correctly. See section Setting the controller before startup.

1. Make sure that all pipes and connections are tight.
2. Switch on the controller.
3. Set the selector switch to "AUTO".
4. Open the isolating valves.
5. Flush a toilet or open a tap connected to one of the inlets.
6. Monitor the increasing liquid level in the tank up to the start level and check that the pumps start and stop at least twice.

Related information

3.20 Setting the controller before startup

4.2 Starting up a product without a controller

1. Make sure that all pipes and connections are tight.
2. Open the isolating valves.
3. Switch on the power supply to the pump.
4. Flush a toilet or open a tap connected to one of the inlets.
5. Monitor the increasing liquid level in the tank up to the start level and check that the pumps start and stop at least twice.

5. Storing the product

CAUTION
Back injury
Minor or moderate personal injury
- Get assistance from another person or use lifting equipment to carry the product.

CAUTION
Crushing of feet
Minor or moderate personal injury
- Wear safety shoes when moving the product.

The tank must not be exposed to direct sunlight. UV light can affect the properties of its composite material, resulting in a shorter life.

For information on how to store the pumps and the controller, see the installation and operating instructions of the product.

6. Product introduction

6.1 Product overview

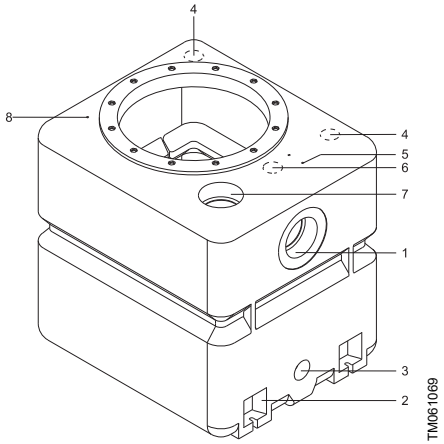

UNOLIFT 270 / DUOLIFT 270

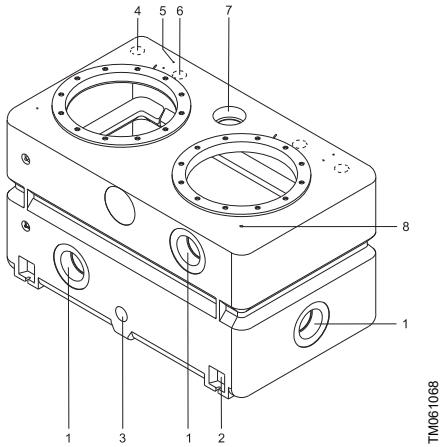

DUOLIFT 540

Pos.	Description
1	Horizontal main inlets, DN 100
2	Mounting brackets
3	Connection, DN 40, for optional diaphragm pump
4	Pump outlet
5	Holes for cable glands
6	Outlet for vent pipe, ∅60
7	Vertical main inlet, DN 100
8	Hole for level sensor hose

6.2 Applications

The lifting station is designed for pumping grey and black wastewater from family houses and commercial buildings where the liquid cannot be led directly to the sewer due to lack of a natural downward slope.

6.3 Pumped liquids

UNILIFT CC, UNILIFT KP, UNILIFT APB

Grey wastewater, that is domestic wastewater without toilet discharge.

UNILIFT AP50B may be used for black wastewater, that is domestic wastewater with toilet discharge, in countries allowing outlet pipes of DN 50 for black wastewater without using a grinder pump.

SEG

Grey and black wastewater, that is domestic wastewater with toilet discharge.

The SEG pump has a grinder system.

Surface water must not be discharged into a lifting station inside the building.

6.4 Automatic operation

The lifting station is designed to operate automatically according to the liquid level in the tank.

You can set the lifting station to automatic operation in two ways. Equip the lifting station either with float switches, fitted directly on the pumps, or with a level sensor tube and a controller.

6.5 Identification

6.5.1 Type key

Example: UNOLIFT 270.40.CC

Example	Type	Designation
UNOLIFT	UNOLIFT: one pump DUOLIFT: two pumps	Model
270	270 540	Tank volume [litres]
40	DN 40	Outlet
CC	CC KP APB, APB SEG	Pump

6.5.2 Nameplate

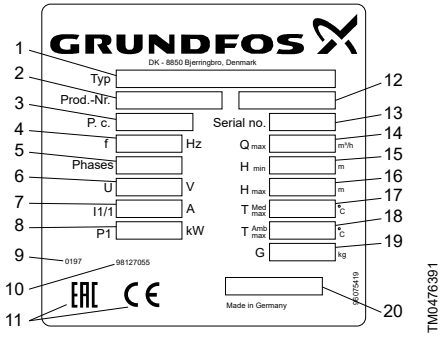

Nameplate, lifting station

Pos.	Description
1	Type designation
2	Product number
3	Production code (year and week)
4-8	-
9	CE mark
10	-
11	Serial number
12-14	-
15	Maximum liquid temperature [°C]
16	Maximum ambient temperature [°C]
17	Weight [kg]
18	-
19	Reference number for the declaration of performance
20	Notified body

6.6 Diaphragm pump

We recommend that you connect a diaphragm pump to the tank. It is a positive displacement pump which can be operated manually. It can be used to drain the tank before service or during power cuts. The tank has a DN 40 outlet for the pump.

6.7 Level sensor tube

The level sensor is an accessory, which works together with a controller LC 220 or LC 221.

The level sensor tube is connected to a piezoresistive level sensor in the controller via the level sensor hose.

The rising liquid level compresses the air inside the level sensor tube and hose, and the piezoresistive sensor transforms the changing pressure into an analog signal. The controller uses the analog signal to start and stop the pump and to indicate high-level alarm.

7. Operating the product

The lifting station is designed to operate automatically according to the liquid level in the tank.

With a controller, you can easily change settings, monitor the system or perform fault finding.

You can download the installation and operating instructions of the controller with the following links and QR codes.

LC 220

QR98503253

http://
net.grundfos.com/qr/i/
98503252

LC 221

QR98503252

http://
net.grundfos.com/qr/i/
98503253

7.1 Setting the start levels

The optimum start level is closely related to the chosen inlet height and pipe configuration. The start level must be as high as possible to increase the effective tank volume and reduce the number of start/stops of the pumps. A too high start level, however, may increase the backflow in the inlet pipe and thus increase the risk of deposits in the inlet pipe.

The figures below show the recommended start levels in relation to the inlet height and pipe configuration.

You can select all the values with LC 221. With LC 220, you can select the lowest or highest value.

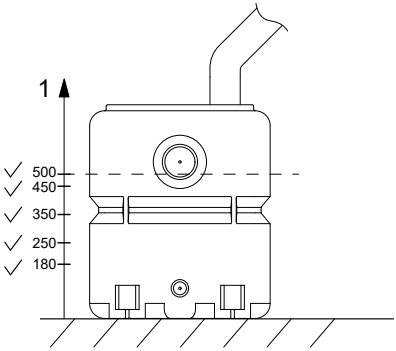

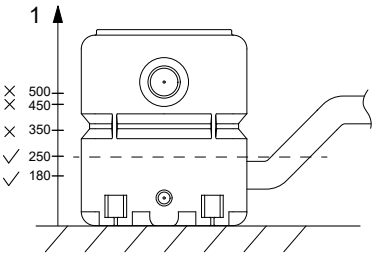

TM066491

TM066489

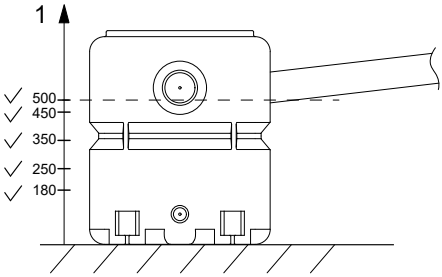

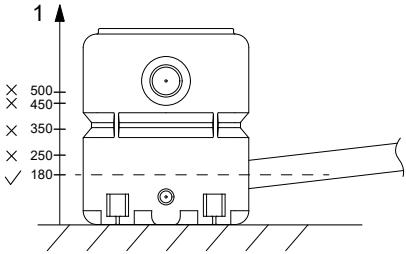

TM066490

TM066488

Pos.	Description
1	Start level

Recommended start levels in relation to the inlet height and pipe configuration

7.1.1 Setting the start levels with a controller

LC 220

Select a start level, either "LOW" or "HIGH", via the DIP switches. The stop and alarm levels are set automatically according to the selected start level.

	LOW	HIGH
Start level [mm]	180	500
Stop level [mm]	100	100
Alarm level [mm]	350	600

See the installation and operating instructions of the controller for more information about the DIP switches.

You can change the values corresponding to "LOW" and "HIGH" via PC Tool, which is available as an accessory. Product number: 96705378.

LC 221

Go go [Setup], [L_01] and select one of the following start levels. The stop and alarm levels are set automatically according to the selected start level.

	1	2	3	4	5
Start level [mm]	180	250	350	450	500
Stop level [mm]	100	100	100	100	100
Alarm level [mm]	350	400	550	600	600

7.1.2 Setting the start levels with float switches

Set the start and stop levels by adjusting the free cable length (L).

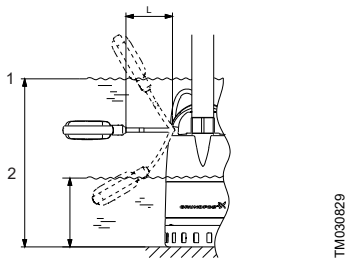

Example of start and stop levels for UNILIFT CC

Pos.	Description
1	Start
2	Stop

We recommend start and stop levels corresponding to a cable length between the minimum and maximum values indicated below.

UNILIFT KP	Cable length (L)			
	70 mm (minimum)		150 mm (maximum)	
	Start	Stop	Start	Stop
UNILIFT KP 150	290	140	335	100
UNILIFT KP 250				
UNILIFT KP 350	300	150	345	110

UNILIFT CC	Cable length (L)			
	100 mm (minimum)		200 mm (maximum)	
	Start	Stop	Start	Stop
UNILIFT CC 5	350	115	400	55
UNILIFT CC 7				
UNILIFT CC 9	350	150	435	90

UNILIFT APB	Cable length (L)			
	100 mm (minimum)		400 mm (maximum)	
	Start	Stop	Start	Stop
UNILIFT AP35/50B	430	320	460	140

7.1.3 Setting the start levels with a lever arm

	Lever arm position	Start [mm]	Stop [mm]
UNILIFT KP 150	High *	250	50
UNILIFT KP 250			
UNILIFT KP 350		260	60
UNILIFT CC 5	-	211	89
UNILIFT CC 7	-		
UNILIFT CC 9	-	247	125
UNILIFT AP35/50B	Low	290	170
	Middle	330	210
	High	380	260

* UNILIFT KP: Use only the high position. See the figure below.

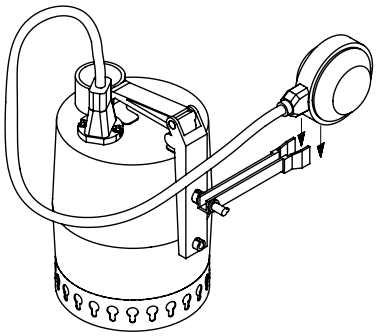

Lever arm on UNILIFT KP

8. Starting up the product after standstill

If the lifting station has been stopped for a long time, for example in a holiday house during winter, you must remove any hard deposits from the bottom of the tank.

If you hear a unusual noise when the pumps start, the pumps may blocked. Close the isolating valve on the inlet side and remove the blockage before you start the system again. You may need to dismantle the pump.

Related information

12. Fault finding the product

9. Servicing the product

WARNING
Biological hazard
Death or serious personal injury

- Wear protective gloves, close the isolating valves and drain the tank before you start any work on the tank.

According to EN 12056, lifting stations in family houses must be maintained at least once a year, in blocks of flats twice a year and in commercial buildings four times a year.

We recommend that you enter a maintenance contract with Grundfos to ensure a consistent operational safety of the system.

Regular checks of the system must include the following:

- Check for deposits at the bottom of the tank.
- Check for leakage.
- Check that the float switch, if any, can move freely.
- Check that the pump is in correct position.

For pump maintenance, see the installation and operating instructions of the pump. It is easy to remove the pumps from the tank thanks to the flexible connecting pipes and clamps.

10. Taking the product out of operation

WARNING
Biological hazard
Death or serious personal injury

- Wear protective gloves, close the isolating valves and drain the tank before you start any work on the tank.

CAUTION
Sharp element
Minor or moderate personal injury

- Wear protective gloves when handling the pump. The impeller has sharp edges.

CAUTION
Crushing of feet
Minor or moderate personal injury

- Wear safety shoes when moving the product.

1. Close the isolating valves on the inlet side.
2. Start the pumps manually to empty most of the tank.
3. Close the isolating valve on the outlet side.
4. Empty the tank completely with the diaphragm pump.
5. Switch of the power supply to the pumps or to the controller, if any.

You can now disconnect and dismantle all the pipes, remove the pumps, cables, etc.

11. Technical data

11.1 Operating conditions

Ambient temperature	0-40 °C
Liquid temperature	0-40 °C during normal operation. Maximum 60 °C for 5 minutes.
Maximum system pressure	6 bar

11.2 Material

Tank	PE
Level sensor tube	PVC
Parts for pipe connection	PVC/PP/EPDM

11.3 Electrical data

See the installation and operating instructions of the pump and the controller.

11.4 Dimensions and weights

The weight applies to the tank only

	Volume [litres]	Weight [kg]
Small tank	270	19.5
Big tank	540	29.5
Tank cover	-	2

12. Fault finding the product

WARNING
Biological hazard
Death or serious personal injury

- Wear protective gloves, close the isolating valves and drain the tank before you start any work on the tank.

For faults indicated by alarms and related to the controller, see the installation and operating instructions of the controller.

For faults related to the pumps, see the installation and operating instructions of the pumps.

12.1 The pump does not start.

Cause	Remedy
The float switch is blocked in low position.	1. Make sure that the float switch can move freely. 2. It may be necessary to adjust the cable length. See section Setting the start levels.
The pump cable is defective.	Repair or replace the cable.

Related information

7.1 Setting the start levels

12.2 The pump does not stop.

Cause	Remedy
The float switch is blocked in high position.	1. Make sure that the float switch can move freely. 2. It may be necessary to adjust the cable length. See section Setting the start levels.

Related information

7.1 Setting the start levels

12.3 The pump starts and stops randomly.

Cause	Remedy
The float switch is not set properly.	Adjust the cable length of the float switch. See section Setting the start levels.
The level sensor tube is not fixed properly in the tank and is moving up as the liquid rises. The sensor receives wrong signals.	Fix the tube to the tank. See fig. 13.
The float switch cannot move freely because the pump has moved.	Position the pump according to fig. Correct position of UNILIFT CC and KP pumps or Correct position of UNILIFT APB pumps.

Related information

3.12 Installing the pump

3.13.2 Assembling the pump connecting pipes

7.1 Setting the start levels

12.4 The tank is not emptying although the pump is running.

Cause	Remedy
There is an airlock in the pump impeller. The pump cannot build up pressure.	Drill a hole of maximum 6 mm in the connecting pipes in the tank. The air is pushed out when the pump starts, and the pump builds up pressure. The pressure loss due to the hole is negligible.

Cause	Remedy
	Do not drill a hole in the outlet pipe outside the tank.

12.5 The pump makes an unusual sound.

Cause	Remedy
The pump is blocked.	Take the pump out of the tank and remove the blockage. You may need to dismantle the pump. See the installation and operating instructions of the pump.

13. Disposing of the product

This product or parts of it must be disposed of in an environmentally sound way.

1. Use the public or private waste collection service.
2. If this is not possible, contact the nearest Grundfos company or service workshop.

The crossed-out wheelie bin symbol on a product means that it must be disposed of separately from household waste. When a product marked with this symbol reaches its end of life, take it to a collection point designated by the local waste disposal authorities. The separate collection and recycling of such products will help protect the environment and human health.

See also end-of-life information at *www.grundfos.com/product-recycling*.

A.1.

Appendix

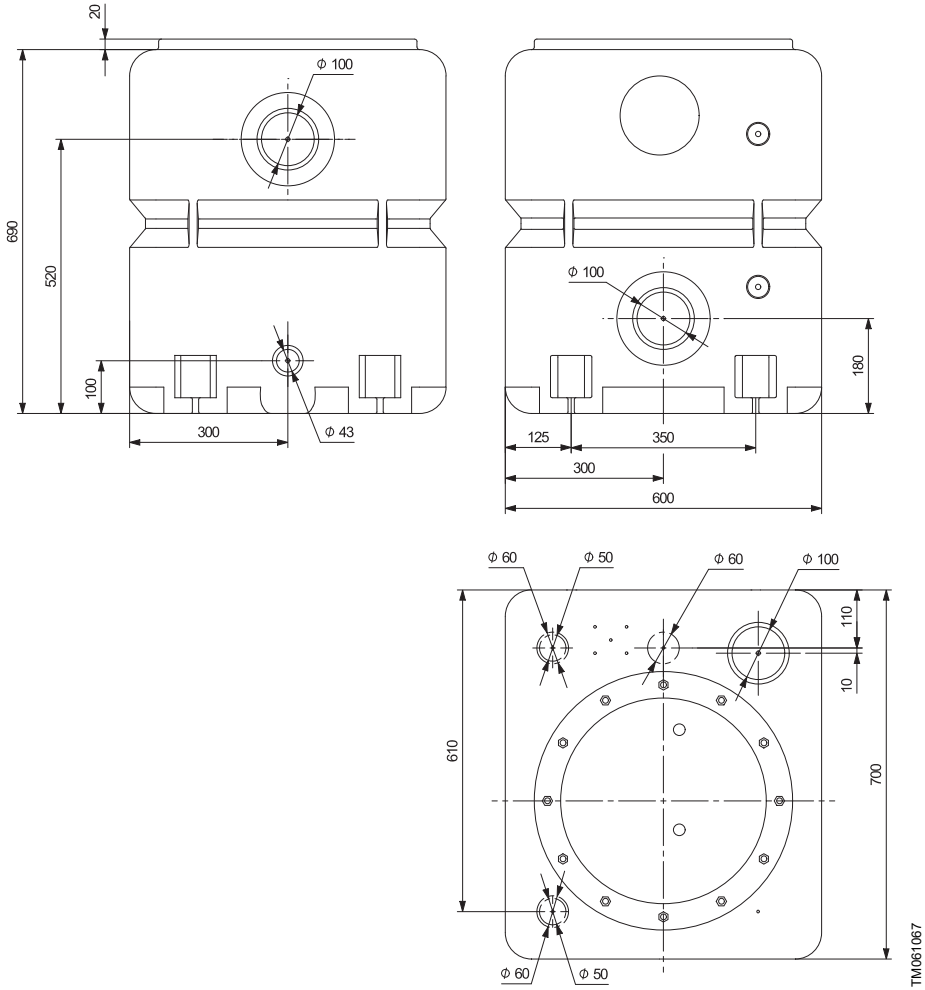

UNOLIFT 270, DUOLIFT 270

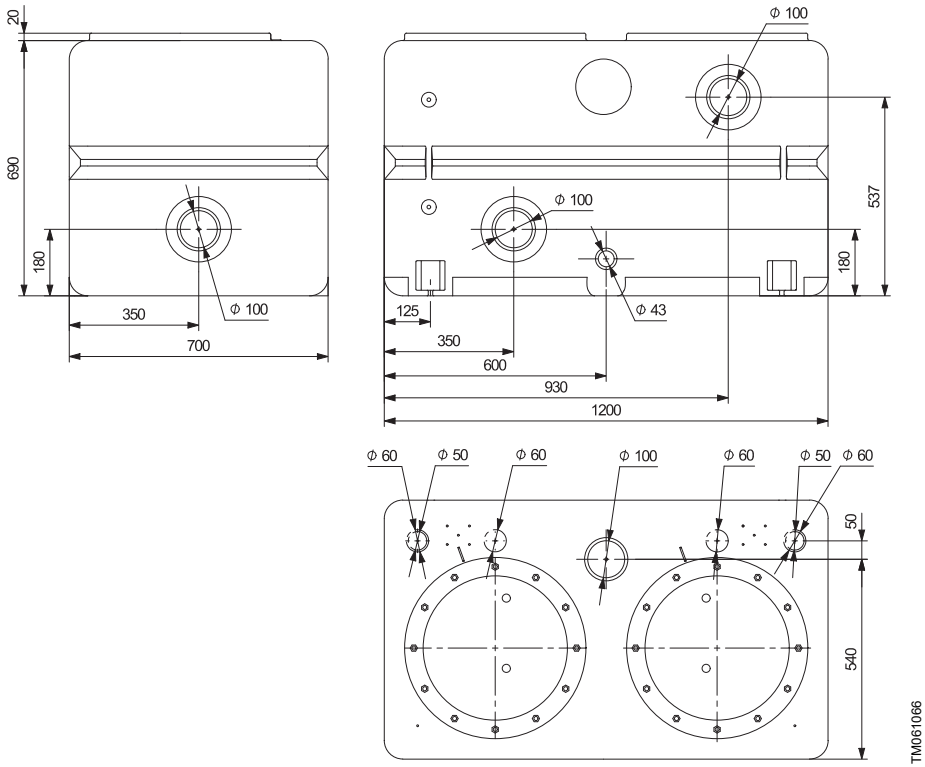
20
690
180
350
700
Φ 100
Φ 100
Φ 100
537
180
125
Φ 43
350
600
930
1200
Φ 60
Φ 50
Φ 60
Φ 100
Φ 60
Φ 50
Φ 60
50
540
TM061066

DUOLIFT 540

Argentina
Bombas GRUNDFOS de Argentina S.A.
Ruta Panamericana km. 37.500industin
1619 - Garín Pcia. de B.A.
Tel.: +54-3327 414 444
Fax: +54-3327 45 3190

Australia
GRUNDFOS Pumps Pty. Ltd.
P.O. Box 2040
Regency Park
South Australia 5942
Tel.: +61-8-8461-4611
Fax: +61-8-8340-0155

Austria
GRUNDFOS Pumpen Vertrieb
Ges.m.b.H.
Grundfosstraße 2
A-5082 Grödig/Salzburg
Tel.: +43-6246-883-0
Fax: +43-6246-883-30

Belgium
N.V. GRUNDFOS Bellux S.A.
Boomsesteenweg 81-83
B-2630 Aartselaar
Tel.: +32-3-870 7300
Fax: +32-3-870 7301

Belarus
Представительство ГРУНДФОС в Минске
220125, Минск
ул. Шафарнянская, 11, оф. 56, БЦ «Порт»
Тел.: +375 17 397 397 3
+375 17 397 397 4
Факс: +375 17 397 397 1
E-mail: minsk@grundfos.com

Bosnia and Herzegovina
GRUNDFOS Sarajevo
Zmaja od Bosne 7-7A
BiH-71000 Sarajevo
Tel.: +387 33 592 480
Fax: +387 33 590 465
www.ba.grundfos.com
E-mail: grundfos@bih.net.ba

Brazil
BOMBAS GRUNDFOS DO BRASIL
Av. Humberto de Alencar Castelo Branco, 630
CEP 09850 - 300
São Bernardo do Campo - SP
Tel.: +55-11 4393 5533
Fax: +55-11 4343 5015

Bulgaria
Grundfos Bulgaria EOOD
Slatina District
Iztochna Tangenta street no. 100
BG - 1592 Sofia
Tel.: +359 2 49 22 200
Fax: +359 2 49 22 201
E-mail: bulgaria@grundfos.bg

Canada
GRUNDFOS Canada inc.
2941 Brighton Road
Oakville, Ontario
L6H 6C9
Tel.: +1-905 829 9533
Fax: +1-905 829 9512

China
GRUNDFOS Pumps (Shanghai) Co. Ltd.
10F The Hub, No. 33 Suhong Road
Minhang District
Shanghai 201106 PRC
Tel.: +86 21 612 252 22
Fax: +86 21 612 253 33

Columbia
GRUNDFOS Colombia S.A.S.
Km 1.5 vía Siberia-Cota Conj. Potrero Chico,
Parque Empresarial Arcos de Cota Bod. 1A.
Cota, Cundinamarca
Tel.: +57(1)-2913444
Fax: +57(1)-8764586

Croatia
GRUNDFOS CROATIA d.o.o.
Buzinski prilaz 38, Buzin
HR-10010 Zagreb
Tel.: +385 1 6595 400
Fax: +385 1 6595 499
www.hr.grundfos.com

Czech Republic
GRUNDFOS Sales Czechia and Slovakia s.r.o.
Čajkovského 21
779 00 Olomouc
Tel.: +420-585-716 111

Denmark
GRUNDFOS DK A/S
Martin Bachs Vej 3
DK-8850 Bjerringbro
Tel.: +45-87 50 50 50
Fax: +45-87 50 51 51
E-mail: info_GDK@grundfos.com
www.grundfos.com/DK

Estonia
GRUNDFOS Pumps Eesti OÜ
Peterburi tee 92G
11415 Tallinn
Tel.: + 372 606 1690
Fax: + 372 606 1691

Finland
OY GRUNDFOS Pumput AB
Trukkikuja 1
FI-01360 Vantaa
Tel.: +358-(0) 207 889 500

France
Pompes GRUNDFOS Distribution S.A.
Parc d'Activités de Chesnes
57, rue de Malacombe
F-38290 St. Quentin Fallavier (Lyon)
Tel.: +33-4 74 82 15 15
Fax: +33-4 74 94 10 51

Germany
GRUNDFOS GMBH
Schlüterstr. 33
40699 Erkrath
Tel.: +49-(0) 211 929 69-0
Fax: +49-(0) 211 929 69-3799
E-mail: infoservice@grundfos.de
Service in Deutschland:
kundendienst@grundfos.de

Greece
GRUNDFOS Hellas A.E.B.E.
20th km. Athinon-Markopoulou Av.
P.O. Box 71
GR-19002 Peania
Tel.: +0030-210-66 83 400
Fax: +0030-210-66 46 273

Hong Kong
GRUNDFOS Pumps (Hong Kong) Ltd.
Unit 1, Ground floor, Siu Wai industrial Centre
29-33 Wing Hong Street & 68 King Lam Street, Cheung Sha Wan
Kowloon
Tel.: +852-27861706 / 27861741
Fax: +852-27858664

Hungary
GRUNDFOS Hungária Kft.
Tópark u. 8
H-2045 Törökbálint
Tel.: +36-23 511 110
Fax: +36-23 511 111

India
GRUNDFOS Pumps india Private Limited
118 Old Mahabalipuram Road
Thoraipakkam
Chennai 600 097
Tel.: +91-44 2496 6800

Indonesia
PT GRUNDFOS Pompa
Graha intirub Lt. 2 & 3
Jln. Cililitan Besar No.454. Makasar, Jakarta Timur
ID-Jakarta 13650
Tel.: +62 21-469-51900
Fax: +62 21-460 6910 / 460 6901

Ireland
GRUNDFOS (Ireland) Ltd.
Unit A, Merrywell Business Park
Ballymount Road Lower
Dublin 12
Tel.: +353-1-4089 800
Fax: +353-1-4089 830

Italy
GRUNDFOS Pompe Italia S.r.l.
Via Gran Sasso 4
I-20060 Truccazzano (Milano)
Tel.: +39-02-95838112
Fax: +39-02-95309290 / 95838461

Japan
GRUNDFOS Pumps K.K.
1-2-3, Shin-Miyakoda, Kita-ku
Hamamatsu
431-2103 Japan
Tel.: +81 53 428 4760
Fax: +81 53 428 5005

Korea
GRUNDFOS Pumps Korea Ltd.
6th Floor, Aju Building 679-5
Yeoksam-dong, Kangnam-ku, 135-916
Seoul, Korea
Tel.: +82-2-5317 600
Fax: +82-2-5633 725

Latvia
SIA GRUNDFOS Pumps Latvia
Deglava biznesa centrs
Augusta Deglava ielā 60
LV-1035, Rīga,
Tel.: + 371 714 9640, 7 149 641
Fax: + 371 914 9646

Lithuania
GRUNDFOS Pumps UAB
Smolensko g. 6
LT-03201 Vilnius
Tel.: + 370 52 395 430
Fax: + 370 52 395 431

Malaysia
GRUNDFOS Pumps Sdn. Bhd.
7 Jalan Peguam U1/25
Glenmarie industrial Park
40150 Shah Alam, Selangor
Tel.: +60-3-5569 2922
Fax: +60-3-5569 2866

Mexico
Bombas GRUNDFOS de México
S.A. de C.V.
Boulevard TLC No. 15
Parque industrial Stiva Aeropuerto
Apodaca, N.L. 66600
Tel.: +52-81-8144 4000
Fax: +52-81-8144 4010

Netherlands
GRUNDFOS Netherlands
Veluwezoom 35
1326 AE Almere
Postbus 22015
1302 CA ALMERE
Tel.: +31-88-478 6336
Fax: +31-88-478 6332
E-mail: info_gnl@grundfos.com

New Zealand
GRUNDFOS Pumps NZ Ltd.
17 Beatrice Tinsley Crescent
North Harbour Industrial Estate
Albany, Auckland
Tel.: +64-9-415 3240
Fax: +64-9-415 3250

Norway
GRUNDFOS Pumper A/S
Strømsveien 344
Postboks 235, Leirdal
N-1011 Oslo
Tel.: +47-22 90 47 00
Fax: +47-22 32 21 50

Poland
GRUNDFOS Pompy Sp. z o.o.
ul. Klonowa 23
Baranowo k. Poznania
PL-62-081 Przeźmierowo
Tel.: (+48-61) 650 13 00
Fax: (+48-61) 650 13 50

Portugal
Bombas GRUNDFOS Portugal, S.A.
Rua Calvet de Magalhães, 241
Apartado 1079
P-2770-153 Paço de Arcos
Tel.: +351-21-440 76 00
Fax: +351-21-440 76 90

Romania
GRUNDFOS Pompe România SRL
S-PARK BUSINESS CENTER, Clădirea A2, etaj 2
Str. Tipografilor, Nr. 11-15, Sector 1, Cod 013714
Bucuresti, Romania
Tel.: 004 021 2004 100
E-mail: romania@grundfos.ro

Russia
ООО Грундфос Россия
ул. Школьная, 39-41
Москва, RU-109544, Russia
Тел. (+7) 495 564-88-00 (495) 737-30-00
Факс (+7) 495 564 8811
E-mail grundfos.moscow@grundfos.com

Serbia
Grundfos Srbija d.o.o.
Omladinskih brigada 90b
11070 Novi Beograd
Tel.: +381 11 2258 740
Fax: +381 11 2281 769
www.rs.grundfos.com

Singapore
GRUNDFOS (Singapore) Pte. Ltd.
25 Jalan Tukang
Singapore 619264
Tel.: +65-6681 9688
Faxax: +65-6681 9689

Slovakia
GRUNDFOS s.r.o.
Prievozská 4D 821 09 BRATISLAVA
Tel.: +421 2 5020 1426
sk.grundfos.com

Slovenia
GRUNDFOS LJUBLJANA, d.o.o.
Leskoškova 9e, 1122 Ljubljana
Tel.: +386 (0) 1 568 06 10
Fax: +386 (0)1 568 06 19
E-mail: tehnika-si@grundfos.com

South Africa
GRUNDFOS (PTY) LTD
16 Lascelles Drive, Meadowbrook Estate
1609 Germiston, Johannesburg
Tel.: (+27) 10 248 6000
Fax: (+27) 10 248 6002
E-mail: lgradidge@grundfos.com

Spain
Bombas GRUNDFOS España S.A.
Camino de la Fuentecilla, s/n
E-28110 Algete (Madrid)
Tel.: +34-91-848 8800
Fax: +34-91-628 0465

Sweden
GRUNDFOS AB
Box 333 (Lunnagårdsgatan 6)
431 24 Mölndal
Tel.: +46 31 332 23 000
Fax: +46 31 331 94 60

Switzerland
GRUNDFOS Pumpen AG
Bruggacherstrasse 10
CH-8117 Fällanden/ZH
Tel.: +41-44-806 8111
Fax: +41-44-806 8115

Taiwan
GRUNDFOS Pumps (Taiwan) Ltd.
7 Floor, 219 Min-Chuan Road
Taichung, Taiwan, R.O.C.
Tel.: +886-4-2305 0868
Fax: +886-4-2305 0878

Thailand
GRUNDFOS (Thailand) Ltd.
92 Chaloem Phrakiat Rama 9 Road
Dokmai, Pravej, Bangkok 10250
Tel.: +66-2-725 8999
Fax: +66-2-725 8998

Turkey
GRUNDFOS POMPA San. ve Tic. Ltd. Sti.
Gebze Organize Sanayi Bölgesi
Ihsan dede Caddesi
2. yol 200. Sokak No. 204
41490 Gebze/ Kocaeli
Tel.: +90 - 262-679 7979
Fax: +90 - 262-679 7905
E-mail: satis@grundfos.com

Ukraine
ТОВ "ГРУНДФОС УКРАЇНА"
Бізнес Центр Європа
Столичне шосе, 103
м. Київ, 03131, Україна
Tel.: (+38 044) 237 04 00
Fax: (+38 044) 237 04 01
E-mail: ukraine@grundfos.com

United Arab Emirates
GRUNDFOS Gulf Distribution
P.O. Box 16768
Jebel Ali Free Zone, Dubai
Tel.: +971 4 8815 166
Fax: +971 4 8815 136

United Kingdom
GRUNDFOS Pumps Ltd.
Grovebury Road
Leighton Buzzard/Beds. LU7 4TL
Tel.: +44-1525-850000
Fax: +44-1525-850011

U.S.A.
Global Headquarters for WU
856 Koomey Road
Brookshire, Texas 77423 USA
Phone: +1-630-236-5500

Uzbekistan
Grundfos Tashkent, Uzbekistan
The Representative Office of Grundfos Kazakhstan in Uzbekistan
38a, Oybek street, Tashkent
Tel.: (+998) 71 150 3290 / 71 150 3291
Fax: (+998) 71 150 3292

Trademarks displayed in this material, including but not limited to Grundfos and the Grundfos logo, are registered trademarks owned by The Grundfos Group. © 2022 Grundfos Holding A/S, all rights reserved.

98490287 **09.2022**

ECM: 1351737