AP80-100

Safety instructions and other important information

QR99912898
Installation and operating instructions
(all available languages)
http://net.grundfos.com/qr/i/99912898

GRUNDFOS

AP80-100

English (GB)

Safety instructions. 4

Declaration of conformity 13

Declaration of conformity 16

Declaration of performance 17

Declaration of performance 30

English (GB) Safety instructions

Original safety instructions

These safety instructions give a quick overview of the safety precautions to be taken in connection with any work on this product. Observe these safety instructions during handling, installation, operation, maintenance, service and repair of this product. These safety instructions are a supplementary document, and all safety instructions will appear again in the relevant sections of the installation and operating instructions. Keep these safety instructions at the installation site for future reference.

General information

Read this document before you install the product. Installation and operation must comply with local regulations and accepted codes of good practice.

Hazard statements

The symbols and hazard statements below may appear in Grundfos installation and operating instructions, safety instructions and service instructions.

DANGER
Indicates a hazardous situation which, if not avoided, will result in death or serious personal injury.

WARNING
Indicates a hazardous situation which, if not avoided, could result in death or serious personal injury.

CAUTION
Indicates a hazardous situation which, if not avoided, could result in minor or moderate personal injury.

The hazard statements are structured in the following way:

SIGNAL WORD
Description of the hazard
Consequence of ignoring the warning
- Action to avoid the hazard.

Notes

The symbols and notes below may appear in Grundfos installation and operating instructions, safety instructions and service instructions.

Observe these instructions for explosion-proof products.

A blue or grey circle with a white graphical symbol indicates that an action must be taken.

A red or grey circle with a diagonal bar, possibly with a black graphical symbol, indicates that an action must not be taken or must be stopped.

If these instructions are not observed, it may result in malfunction or damage to the equipment.

Tips and advice that make the work easier.

Target group

These installation and operating instructions are intended for professional installers.

Product description

The AP80-100 pumps are a range of vortex and single-channel (1-channel) impeller pumps designed for pumping sewage, effluents, sludge and surface water.

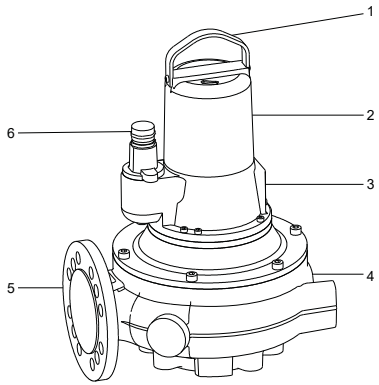

AP80 pump

Position	Description
1	Lifing bracket
2	Stator housing
3	Nameplate

Position	Description
4	Pump housing
5	Outlet
6	Cable plug

Pumped liquids

The pumps must not be used for pumping combustible, flammable, or corrosive liquids.

The pumps are designed for transferring the following liquids:

- sewage
- drainage and surface water
- sludge with minimal dry-solids content
- effluent.

Intended use

These pumps are designed for pumping sewage and wastewater in a wide range of private and industrial applications.

Identification

Nameplate

Fix the extra nameplate supplied with the pump at the installation site or keep it in the cover of this booklet.

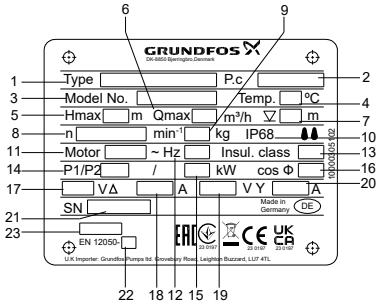

Position	Description
1	Type designation
2	Production code, year and week
3	Product number
4	Maximum liquid temperature [°C]
5	Maximum head [m]
6	Maximum flow rate [m^3/h]
7	Maximum installation depth [m]
8	Speed [rpm]
9	Net weight [kg]
10	Enclosure class
11	Phase
12	Frequency [Hz]
13	Insulation class
14	Motor input power P1 [kW]
15	Motor input power P2 [kW]
16	Cos φ, 1/1 load
17	Rated voltage [V], delta connection
18	Rated current [A], delta connection
19	Rated voltage [V], star connection
20	Rated current [A], star connection
21	Serial number
22	Standard number
23	Safety Instruction publication number

Type key

Fix the extra nameplate supplied with the pump at the installation site or keep it in the cover of this booklet

Example: AP80.80.13.3.V

Code	Description	Explanation
AP	Wastewater/ sewage pump	Pump type
80	Maximum solids size 80 = 80 mm	Pump passage
80	Nominal outlet diameter 80 = 80 mm	Pump outlet
13	Output power P2 / 10	Power [kW]
1	Single-phase motor	Number of phases

Code	Description	Explanation
3	Three-phase motor	
1	Single-channel impeller	Impeller type
V	Vortex impeller	
Z	Custom-built products	Customisation

Handling and lifting the product

All lifting equipment must be rated for the purpose and checked for damage before lifting the pump. The lifting equipment rating must not be exceeded. The pump weight is stated on the nameplate.

WARNING
Crushing hazard
Death or serious personal injury

- Do not stack pump packages or pallets on top of each other when lifting or moving them.
- Always lift the pump by its lifting bracket or by a forklift truck, if the pump is fixed on a pallet. Never lift the pump by the power cable, hose or pipe.

CAUTION
Sharp element
Minor or moderate personal injury

- Wear protective gloves when opening the pump package.

Keep the cable end protectors in storage for later use.

WARNING
Crushing hazard
Death or serious personal injury

- Make sure that your hand cannot get caught between the lifting bracket and the hook.

WARNING
Crushing hazard
Death or serious personal injury

- Make sure that the hook is fixed to the lifting bracket properly.
- Always lift the pump by its lifting bracket or by a forklift truck, if the pump is fixed on a pallet.
- Make sure that the lifting bracket is tightened before lifting the pump.

Installation requirements

Pump installation in pits must be carried out by specially trained persons.

DANGER
Electric shock
Death or serious personal injury

- It must be possible to lock the main switch in position 0. Type and requirements are specified in EN 60204-1.

DANGER
Electric shock
Death or serious personal injury

- Make sure there is at least 3 m free cable above the maximum liquid level.

Maintenance and service work must be carried out when the pump is outside the pit. For safety reasons, all work inside pits must be supervised by a person outside the pit.

WARNING
Crushing hazard
Death or serious personal injury

- Make sure the lifting bracket is tightened before lifting the pump.

Electrical connection

DANGER
Electric shock
Death or serious personal injury

- Connect the pump to an external main switch, which ensures all-pole disconnection with a contact separation according to EN 60204-1.
- It must be possible to lock the main switch in position 0. Type and requirements as specified in EN 60204-1.

DANGER
Electric shock
Death or serious personal injury

- If the power cable is damaged, it must be replaced by the manufacturer, his service agent or a similarly qualified person.

DANGER
Electric shock
Death or serious personal injury
- Before the first startup, check the cable for visible defects to avoid short circuits.

Frequency converter operation

In principle, all three-phase motors can be connected to a frequency converter. However, frequency converter operation often exposes the motor insulation system to a heavier load and may cause the motor to be more noisy due to eddy currents caused by voltage peaks.

Large motors driven with a frequency converter may be loaded by bearing currents.

For frequency converter operation, observe the following:

- The thermal protection of the motor must be connected.
- Peak voltage and dU/dt must be in accordance with the table below. The values stated are maximum values supplied to the motor terminals. The cable influence is not taken into account. See the frequency converter data sheet regarding the actual values and the cable influence on the peak voltage and dU/dt.
- The minimum switching frequency is 2 kHz. The switching frequency can be variable.
- If the pump is an Ex-approved pump, check if the Ex certificate of the specific pump allows the use of a frequency converter.
- Set the frequency converter U/f ratio according to the motor data.
- Before installing a frequency converter, calculate the lowest frequency allowed in the installation to avoid zero flow.
- Do not reduce the motor speed to less than 50 %.
- Keep the flow rate above 1 m/sec.
- Let the pump run at rated speed at least once a day to prevent sedimentation in the pipe network.
- Do not exceed the frequency indicated on the nameplate as this may cause motor overload.
- Keep the power cable as short as possible. The peak voltage increases with the length of the power cable.
- Use input and output filters on the frequency converter.
- Use a screened power cable if there is a risk that electrical noise may disturb other electrical equipment.
- Set the frequency converter for constant-torque operation. Use pulse width modulation.

When operating the pump with a frequency converter, consider the following:

- The locked-rotor torque can be lower depending on the type of the frequency converter.
- The noise level may increase. See the installation and operating instructions for the selected frequency converter.

Maximum repetitive peak voltage [V]	Maximum dU/dt U_N 400 V [V/µ sec.]
850	2000

Frequency converter use may reduce the lifespan of the bearings and the shaft seal, depending on the operating mode and other circumstances.

For more information about the frequency converter operation, see the data sheet and the installation and operating instructions for the selected frequency converter.

Level controllers

The liquid level can be controlled by the Grundfos LC level controllers.

Suitable level controllers:

- LC 231: compact solution with certified motor protection for single- and dual-pump versions.
- LC 241: cabinet solution offering modularity and customisation for single- and dual-pump versions.

In the following description, "level switches" can be air bells, float switches or electrodes depending on the selected pump controller.

Depending on the security levels and the number of pumps, level switches can be used in the following setups:

- Dry run (optional)
- Stop
- Start pump 1 (single-pump version)
- Start pump 2 (dual-pump version)
- High level (optional)

Analogue level transmitters can be used, and all levels can be customised. Level switches can be used with level transmitters, for dry-run protection and high level alarm.

The pump must not run dry. Install an additional level switch to ensure that the pump is stopped in case the stop level switch is not operating.

Installing level switches

When installing the level switches, observe the following points:

- To prevent air intake and vibrations, install the stop level switch, so the pump is stopped before the liquid level is lowered to the middle of the motor housing.

- Install the start level switch, so the pump is started at the required level. The pump must always start before the liquid level reaches the bottom inlet pipe.
- Always install the high-level alarm switch about 10 cm above the start level switch. However, the alarm must always be given before the liquid level reaches the inlet pipe.

For further settings and information, see the installation and operating instructions for the selected level controllers.

Startup

CAUTION
Crushing of hands
Minor or moderate personal injury

- Do not put your hands or any tool into the pump inlet or outlet after the pump has been connected to the power supply, unless the pump has been switched off by removing the fuses or switching off the main switch.
- Make sure that the power supply cannot be switched on unintentionally.

CAUTION
Biological hazard
Minor or moderate personal injury

- Make sure to seal the pump outlet properly when fitting the outlet pipe, otherwise water might spray out.

WARNING
Crushing of hands
Death or serious personal injury

- When lifting the pump, make sure your hand cannot get caught between the lifting bracket and the hook.

DANGER
Crushing hazard
Death or serious personal injury

- Make sure that the hook is fixed properly to the lifting bracket.
- Always lift the pump by its lifting bracket or by a forklift truck, if the pump is fixed on a pallet.
- Never lift the pump by the power cable, hose or pipe.
- Make sure that the lifting bracket is tightened before lifting the pump.

DANGER
Electric shock
Death or serious personal injury

- Before starting up the product for the first time, check the power cable for visible defects to avoid short circuits.
- If the power cable is damaged, it must be replaced by the manufacturer, his service agent or a similarly qualified person.
- Make sure that the product is earthed properly.
- Switch off the power supply and lock the main switch in position 0.
- Switch off any external voltage connected to the product before working on it.

CAUTION
Biological hazard
Minor or moderate personal injury

- Flush the pump thoroughly with clean water and rinse the pump parts after dismantling.
- Wear appropriate personal protective equipment and clothing.

CAUTION
Hot surface
Minor or moderate personal injury

- Do not touch the surface of the pump while it is running.

Operating modes

Never use these pumps for siphoning operation. The pumps must always be completely submerged in the pumped liquid.

The pumps are designed for continuous (S1) operation. In this operating mode, the pump can operate continuously without being stopped for cooling. Being completely submerged, the pump is sufficiently cooled by the surrounding liquid. During S1 operation, the maximum number of starts per hour is 15.

The pumps must be completely submerged for continuous operation.

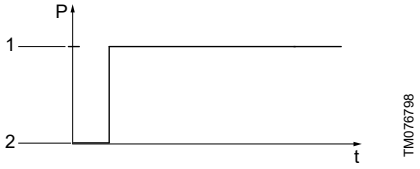

S1 operation

Position	Description
1	Operation
2	Stop

The minimum liquid level is at the top of the pump housing.

For AP40 and AP50 pumps,
intermittent (S3) operation between 40 °C and 60 °C liquid temperature is permitted up to 30%. S3 operation is a series of 10-minute duty cycles. Each cycle has a 3-minute period of constant load followed by a 7-minute period of rest. Thermal equilibrium is not reached during the cycle.

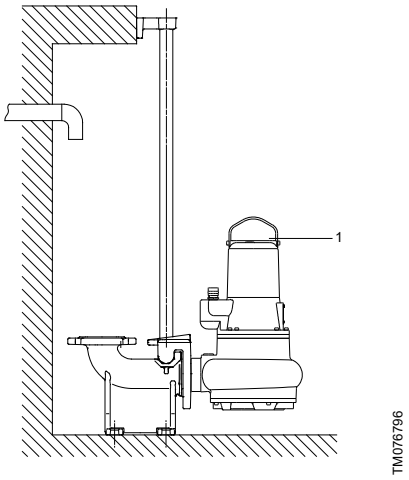

Minimum liquid level

Position	Description
1	Minimum liquid level

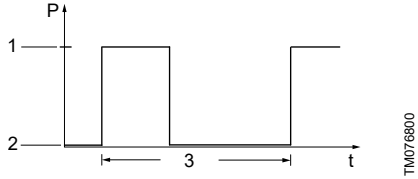

S3 operation

Position	Description
1	Operation
2	Stop
3	Duty cycle

Direction of rotation

All single-phase pumps are factory-wired for the correct direction of rotation. Before starting up three-phase pumps, check the direction of rotation. An arrow on the stator housing indicates the correct direction of rotation.

The impeller rotates clockwise. When started, the pump jerks counterclockwise.

Procedure 1:

1. Start the pump and measure the quantity of liquid or the outlet pressure.
2. Stop the pump and interchange two phases in the power cable.
3. Restart the pump and measure the quantity of liquid or the outlet pressure.
4. Stop the pump.
5. Compare the results of steps 1 and 3. The connection which gives the larger quantity of liquid or the higher pressure is the correct direction of rotation.

Procedure 2:

1. Let the pump hang from a lifting device such as the chain used for lowering the pump into the pit.
2. Start and stop the pump while observing the movement (jerk) of the pump.
3. If connected correctly, the pump jerks counterclockwise.
4. If the direction of rotation is wrong, interchange two phases in the power cable.

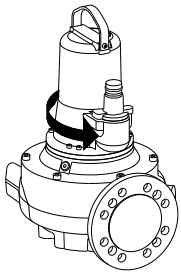

TM076805

Jerk direction

Storing the product

For periods of storage the pump must be protected against moisture and heat.

After a period of storage, inspect the pump before putting it into operation. Make sure that the impeller can rotate freely. Pay attention to the condition of the shaft seals, O-rings and the cable entries.

Leave the cable-end protectors on the power and control cables until starting the electrical connection. Whether insulated or not, the free cable end must never be exposed to moisture or water. Non-compliance with this may cause damage to the motor.

If the pump is being stored for more than one month, turn the impeller at least every month to prevent the seal faces of the lower mechanical shaft seal from seizing up.

If you do not do this, the shaft seal may be damaged when the pump is started.

If the impeller cannot be turned, contact Grundfos or an authorised service workshop.

WARNING
Crushing of hands
Death or serious personal injury
- Do not turn the impeller by hand. Always use an appropriate tool.

Maintenance schedule

Before initial startup or after a longer period of storage:
- Check the insulation resistance.
- Check the fill level in the sealing chamber.
- Check possible damage on the axial face seal.

Monthly:
- Monitor the power input and voltage.
- Check the used switchgears for resistance and sealed space control.

Every six months:
- Inspect the power supply cable.
- Inspect the cable holder and wiring.
- Inspect the accessories, such as the suspension device and hoisting gears.

After 1000 operating hours or after six months, whichever is earlier:
- Monitor current consumption and voltage
- Check the relays for posistors, sealing room, etc.
- Inspect power supply cable
- Inspect cable holder and cable bracing
- Inspect accessories, e.g. suspension device and hoisting gears

After 3000 operating hours:
- Perform visual check of the pump and inspect the wear ring.
- Check the oil level and condition. Change the oil. Change the shaft seal in case of water ingress or oil leakage.
- Check the hydraulic components and wear ring for wear. Replace if necessary.

After 8000 operating hours or two years:
- Check the insulation resistance
- Empty the leakage chamber. Not available for all models. For more information, contact Grundfos.
- Inspect all safety and control devices.
- Check the coating and touch-up as required.

After 15 000 operating hours or five years:
- General overhaul.

If the pump is used in highly abrasive or corrosive matter, the maintenance intervals should be reduced.

Tightening torques

	A2/A4, Hardness class 70	A2/A4, Hardness class 80
	DIN912 / DIN933	
M6	7 Nm	11.8 Nm
M8	17 Nm	28.7 Nm
M10	33 Nm	58 Nm
M12	57 Nm	100 Nm
M16	140 Nm	245 Nm
M20	273 Nm	494 Nm

Oil check and change

Only use original parts.

Use Shell Ondina X420 oil or equivalent type.

Dispose of used oil must comply with local regulations

CAUTION
Pressurised system
Minor or moderate personal injury
- The oil chamber may be under pressure. Loosen the screws carefully and do not remove them until the pressure has been completely relieved.

After 3000 operating hours or at least once a year, change the oil in the oil chamber as described below. If the shaft seal has been replaced, the oil must be changed.

When the pump is new or the shaft seal is replaced, check the oil level and water content after one week of operation. If there is more than 20 % extra liquid (water) in the oil chamber, the shaft seal is defective.

The table below states the quantity of oil in the oil chamber:

Pump type	Quantity of oil in the oil chamber [l]
AP80	0.6
AP100	1.9

Draining of oil

1. Place the pump on a level surface with one oil screw pointing downwards.
2. Place a 2.5 litre capacity transparent container under the oil screw.
3. Remove the lower oil screw.
4. Remove the upper oil screw. Inspect the oil. If the colour is greyish white, the oil may contain water.If the oil contains water, the shaft seal is defective and must be replaced. If the oil quantity is less than the specified, the shaft seal is defective and must be replaced. If the shaft seal is not replaced, it can cause motor damage.
5. Clean the surfaces for gaskets and oil screws.

Filling with oil

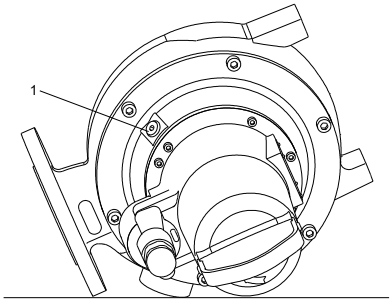

Oil filling position

Proceed as follows:

1. Place the pump horizontally, on a level surface.
2. Fill new oil into the chamber through the oil filling position (1). The correct oil volume is prescribed in the Table above. Use Shell Ondina X420 or equivalent.
3. Remove the old seal (gasket) for the oil plug, and replace it with a new seal, which can be found in Kit Oil Plug Seals.
4. Fit both oil screws

Contaminated pumps

The product is classified as contaminated, if it is used for contagious or toxic liquid.

CAUTION
Biological hazard
Minor or moderate personal injury
- Flush the pump thoroughly with clean water and rinse the pump parts after dismantling.

Before returning the product for service, contact Grundfos with details about the pumped liquid. Otherwise, Grundfos can deny to service the product.

Any application for service must include details about the pumped liquid.

Clean the product in the best possible way before returning it.

Technical data

	Maximum solids size [mm]	Impeller type	Shaft seal		Ball bearing types	
			Motor side	Medium side	Upper	Lower
AP80 (1.3 kW)	80	1-channel	SIC / SIC	SIC / SIC	Double row angular	Deep groove
AP80 (2.6 kW)		Vortex				
AP80 (2.0 kW)						
AP100 (2.9 kW)	100	1-channel				

Operating conditions

Operating mode	S1
Liquid temperature	0-40 °C. For short periods, a temperature of up to 60 °C is allowed.
Maximum density of the medium	1040 kg/m³
pH	6 – 11
Maximum installation depth	20 m
Operating pressure	6 bar
Regular cable length	10 m
Maximum starts per hour	15

The sound pressure level of the pumps is lower than the limiting values stated in the EC Council directive 2006/42/EC relating to machinery.

Weights

Type (kW)	Weight (kg)
AP80.80.13.3.1.28 (1.3)	74
AP80.80.13.3.1.30 (1.3)	
AP80.80.100.13.3.1.28 (1.3)	
AP80.80.100.13.3.1.30 (1.3)	
AP80.80.26.3.V (2.6)	66
AP80.80.20.3.V (2.0)	
AP100.100.29.3.1 (2.9)	104

Electrical data

Power supply	3 x 400 V 50 Hz
	1 x 230 V 50 Hz
Enclosure class	IP68
Insulation class	H (180°C)

Disposing of the product

This product or parts of it must be disposed of in an environmentally sound way.

1. Use the public or private waste collection service.
2. If this is not possible, contact the nearest Grundfos company or service workshop.

The crossed-out wheelie bin symbol on a product means that it must be disposed of separately from household waste. When a product marked with this symbol reaches its end of life, take it to a collection point designated by the local waste disposal authorities. The separate collection and recycling of such products will help protect the environment and human health.

See also end-of-life information at *www.grundfos.com/product-recycling*.

Declaration of conformity

GB: EC/EU declaration of conformity

We, Grundfos, declare under our sole responsibility that the products AP80, AP100, to which the declaration below relates, are in conformity with the Council Directives listed below on the approximation of the laws of the EC/EU member states.

BG: Декларация за съответствие на ЕС/ЕО

Ние, Grundfos, декларираме с пълната си отговорност, че продуктите AP80, AP100, за които се отнася настоящата декларация, отговарят на следните директиви на Съвета за уеднаквяване на правните разпоредби на държавите-членки на ЕС/ЕО.

CZ: ES/EU prohlášení o shodě

My společnost Grundfos prohlašujeme na svou plnou odpovědnost, že výrobky AP80, AP100, YYY, na které se toto prohlášení vztahuje, jsou v souladu s níže uvedenými ustanoveními směrnice Rady pro sblížení právních předpisů členských států ES/EU.

DE: EG-/EU-Konformitätserklärung

Wir, Grundfos, erklären in alleiniger Verantwortung, dass das Produkt AP80, AP100, auf das sich diese Erklärung bezieht, mit den folgenden Richtlinien des Rates zur Angleichung der Rechtsvorschriften der EG-/EU-Mitgliedsstaaten übereinstimmt.

DK: EF/EU-overensstemmelseserklæring

Vi, Grundfos, erklærer under ansvar at produkterne AP80, AP100 som erklæringen nedenfor omhandler, er i overensstemmelse med Rådets direktiver der er nævnt nedenfor, om indbyrdes tilnærmelse til EF/EU-medlemsstaternes lovgivning.

EE: EÜ/ELi vastavusdeklaratsioon

Meie, Grundfos, kinnitame ja kanname ainuisikulist vastutust selle eest, et tooted AP80, AP100, mille kohta allolev deklaratsioon käib, on kooskõlas Nõukogu Direktiividega, mis on nimetatud allpool vastavalt vastuvõetud õigusaktidele ühtlustamise kohta EÜ/ELi liikmesriikides.

ES: Declaración de conformidad de la CE/UE

Grundfos declara, bajo su exclusiva responsabilidad, que los productos a los que concierne la presente declaración, marcados con la denominación AP80, AP100, son conformes con las Directivas del Consejo que figuran a continuación, basadas en la aproximación de las legislaciones correspondientes de los Estados miembros de la CE/UE.

FI: EY/EU-vaatimustenmukaisuusvakuutus

Grundfos vakuuttaa omalla vastuullaan, että tuotteet AP80, AP100, joita tämä vakuutus koskee, ovat EY/EU:n jäsenvaltioiden lainsäädännön lähentämiseen tähtäävien Euroopan neuvoston direktiivien vaatimusten mukaisia seuraavasti.

FR : Déclaration de conformité CE/UE

Nous, Grundfos, déclarons sous notre entière responsabilité que les produits AP80, AP100 auxquels la déclaration ci-dessous fait référence, sont conformes aux directives du Conseil répertoriées ci-dessous, concernant le rapprochement des législations des États membres de la CE et de l'UE.

GR: Δήλωση συμμόρφωσης ΕΚ/ΕΕ

Εμείς, η Grundfos, δηλώνουμε με αποκλειστικά δική μας ευθύνη ότι τα προϊόντα AP80, AP100, στα οποία αναφέρεται η παρακάτω δήλωση, συμμορφώνονται με τις παρακάτω Οδηγίες του Συμβουλίου περί προσέγγισης των νομοθεσιών των κρατών μελών της ΕΚ/ΕΕ.

HU: EC/EU megfelelőségi nyilatkozat

Mi, a Grundfos vállalat, teljes felelősséggel kijelentjük, hogy a(z) AP80, AP100 termékek, amelyre az alábbi nyilatkozat vonatkozik, megfelelnek az Európai Közösség/Európai Unió tagállamainak jogi irányelveit összehangoló tanács alábbi előírásainak.

IT: Dichiarazione di conformità CE/UE

Grundfos dichiara sotto la sua esclusiva responsabilità che i prodotti AP80, AP100, ai quali si riferisce questa dichiarazione, sono conformi alle seguenti direttive del Consiglio riguardanti il riavvicinamento delle legislazioni degli Stati membri CE/UE.

LT: EB/ES atitikties deklaracija

Mes, „Grundfos“, su visa atsakomybe pareiškiame, kad produktai AP80, AP100, kuriems skirta ši deklaracija, atitinka toliau nurodytas Tarybos Direktyvas dėl EB/ES šalių narių įstatymų suderinimo.

LV: EK/ES atbilstības deklarācija

Uzņēmums Grundfos ar pilnu atbildību paziņo, ka produkti AP80, AP100, uz kuriem attiecas tālāk redzamā deklarācija, atbilst tālāk norādītajām Padomes direktīvām par EK/ES dalībvalstu normatīvo aktu tuvināšanu.

NL: EG/EU-conformiteitsverklaring

Wij, Grundfos, verklaren geheel onder eigen verantwoordelijkheid dat de producten AP80, AP100, waarop de onderstaande verklaring betrekking heeft, in overeenstemming zijn met de onderstaande Richtlijnen van de Raad inzake de onderlinge aanpassing van de wetgeving van de EG-/EU-lidstaten.

PL: Deklaracja zgodności WE/UE

Firma Grundfos oświadcza z pełną odpowiedzialnością, że jej produkty AP80, AP100, których dotyczy niniejsza deklaracja, są zgodne z następującymi dyrektywami Rady w sprawie zbliżenia przepisów prawnych państw członkowskich WE/UE.

PT: Declaração de conformidade CE/UE

A Grundfos declara sob sua única responsabilidade que os produtos AP80, AP100, aos quais diz respeito a declaração abaixo, estão em conformidade com as Diretivas do Conselho sobre a aproximação das legislações dos Estados Membros da CE/UE.

RO: Declarație de conformitate CE/UE

Subscrisa, Grundfos, declară pe propria răspundere că produsele AP80, AP100, la care se referă declarația de mai jos, sunt în conformitate cu Directivele Consiliului enumerate mai jos privind apropierea legislațiilor statelor membre CE/UE.

SR: EZ/EU deklaracija o usklađenosti

Mi, Grundfos, izjavljujemo na našu isključivu odgovornost da su proizvodi AP80, AP100, na koje se dole navedena deklaracija odnosi, u skladu sa dole navedenim Direktivama Saveta o usklađivanju zakona zemalja članica EZ/EU.

SE: EG/EU-försäkran om överensstämmelse

Vi, Grundfos, försäkrar under ansvar att produkterna AP80, AP100, som omfattas av nedanstående försäkran, är i överensstämmelse med de rådsdirektiv om inbördes närmande till EG/EU-medlemsstaternas lagstiftning som listas nedan.

SI: Izjava o skladnosti ES/EU

V Grundfosu s polno odgovornostjo izjavljamo, da so izdelki AP80, AP100, na katere se spodnja izjava nanaša, v skladu s spodnjimi direktivami Sveta o približevanju zakonodaje za izenačevanje pravnih predpisov držav članic EZ/EU.

SK: ES/EÚ vyhlásenie o zhode

My, spoločnosť Grundfos, vyhlasujeme na svoju plnú zodpovednosť, že produkty AP80, AP100, na ktoré sa vyhlásenie uvedené nižšie vzťahuje, sú v súlade s ustanoveniami nižšie uvedených smerníc Rady pre zblíženie právnych predpisov členských štátov ES/EÚ.

TR: AT/AB uygunluk beyanı

Grundfos olarak, aşağıdaki bildirim konusu olan AP80, AP100 ürünlerinin, AT/AB üye ülkelerinin direktiflerinin yakınlaştırılmasıyla ilgili aşağıdaki Konsey Direktifleriyle uyumlu olduğunu ve bununla ilgili olarak tüm sorumluluğun bize ait olduğunu beyan ederiz.

UA: Декларація відповідності директивам EC/EU

Ми, компанія Grundfos, під нашу одноосібну відповідальність заявляємо, що вироби AP80, AP100, до яких відноситься нижченаведена декларація, відповідають директивам Ради, переліченим нижче, щодо тотожності законів країн-членів ЄС.

CN:欧共体/欧盟符合性声明

我们，格兰富，在我们的全权责任下声明，产品 AP80, AP100，即本声明所指之产品，符合欧共体/欧盟使其成员国法律趋于一致的以下理事会指令。

AR: إقرار مطابقة EC/EU

نقر نحن، جروندفوس، بمقتضى مسؤوليتنا الفردية بأن المنتجات AP80, AP100 التي يختص بها الإقرار أدناه تكون مطابقة لتوجيهات المجلس المذكورة أدناه بشأن التقريب بين قوانين الدول أعضاء المجموعة الأوروبية/الاتحاد الأوروبي (EC/EU).

- Machinery Directive (2006/42/EC).
  Standards used: EN 809:1998 + A1:2009
- RoHS Directives (2011/65/EU and 2015/863/EU
  Standards used: EN IEC 63000:2018

This EC/EU declaration of conformity is only valid when published as part of the Grundfos AP80-100 safety instructions (publication number 99926157) document.

Székesfehérvár, January 31, 2024

Zoltán Lajtos

MUNI Solutions Value Stream Director
Grundfos Holding A/S
Poul Due Jensens Vej 7
8850 Bjerringbro, Denmark
www.grundfos.com

Person authorised to compile technical file and empowered to sign the EC/EU declaration of conformity.

Declaration of conformity

UK declaration of conformity

We, Grundfos, declare under our sole responsibility that the products to which the declaration below relates, are in conformity with UK regulations, standards and specifications to which conformity is declared, as listed below:

Valid for products:

AP80, AP100

- Supply of Machinery (Safety) Regulations 2008

  Standards used: EN 809:1998 + A1:2009.
- The Restriction of the Use of Certain Hazardous Substances in Electrical and Electronic Equipment Regulations 2019

  Standards used: EN IEC 63000:2018

This UK declaration of conformity is only valid when accompanying Grundfos Safety Instructions.

UK Importer: Grundfos Pumps ltd. Grovebury Road, Leighton Buzzard, LU7 4TL.

Székesfehérvár, January 31, 2024

Zoltán Lajtos
MUNI Solutions Value Stream Director
Grundfos Holding A/S
Poul Due Jensens Vej 7
8850 Bjerringbro, Denmark
www.grundfos.com

Manufacturer and person empowered to sign the UK declaration of conformity.

10000346859

GB: Declaration of performance

EU declaration of performance in accordance with Annex III of Regulation (EU) No 305/2011Â (Construction Product Regulation)

1. Unique identification code of the product type:
   - EN 12050-1
2. Type, batch or serial number or any other element allowing identification of the construction product as required pursuant to Article 11(4):
   - AP80-100 pumps marked with EN 12050-1 on the nameplate.
3. Intended use or uses of the construction product, in accordance with the applicable harmonised technical specification, as foreseen by the manufacturer:
   - Pumps for pumping of wastewater containing faecal matter marked with EN 12050-1 on the nameplate.
4. Name, registered trade name or registered trade mark and contact address of the manufacturer as required pursuant to Article 11(5):
   - Grundfos Holding A/S

     Poul Due Jensens Vej 7

     8850 Bjerringbro

     Denmark.
5. NOT RELEVANT.
6. System or systems of assessment and verification of constancy of performance of the construction product as set out in Annex V:
   - System 3.
7. In case of the declaration of performance concerning a construction product covered by a harmonised standard:
   - TÜV Rheinland LGA Products GmbH, identification number: 0197.

     Performed test according to EN 12050-1 under system 3. (description of the third-party tasks as set out in Annex V)
   - Test report: No. DE23OXLA.

     Type-tested.
8. NOT RELEVANT.
9. Declared performance:

   The products covered by this declaration of performance are in compliance with the essential characteristics and the performance requirements as described in the following:
   - Standard used: EN 12050-1:2015-05, EN 12050-1:2001.
10. The performance of the product identified in points 1 and 2 is in conformity with the declared performance in point 9.

BG: Декларация за изпълнение

Декларация на ЕО за изпълнение съгласно Анекс III на регламент (ЕО) № 305/2011Â (Регламент за строителните продукти)

1. Уникален идентификационен код на типа продукт:
   - EN 12050-1
2. Типов, партиден или сериен номер на всеки друг елемент, позволяващ идентификация на строителния продукт, изисквана съгласно Член 11(4):
   - Помпи AP80-100 с обозначение EN 12050-1 на табелката с данни.
3. Употреба или употреби по предназначение на строителния продукт, в съответствие с приложимата хармонизирана техническа спецификация, както е предвидено от производителя:
   - Помпи за изпомпване на отпадни води, съдържащи фекални вещества, означени с EN 12050-1 на табелата с данни.
4. Име, запазено търговско име или запазена търговска марка и адрес за контакт на производителя, както се изисква съгласно Член 11(5):
   - Grundfos Holding A/S

     Poul Due Jensens Vej 7

     8850 Bjerringbro

     Дания.
5. НЕ СЕ ОТНАСЯ ЗА СЛУЧАЯ.
6. Система или системи за оценка и проверка на устойчивостта на изпълнението на строителния продукт, както е изложено в Анекс V:
   - Система 3.
7. В случай на декларация за изпълнение, отнасяща се за строителен продукт, който попада в обсега на хармонизиран стандарт:
   - TÜV Rheinland LGA Products GmbH, идентификационен номер: 0197.

     Изпълнен тест в съответствие с EN 12050-1 съгласно система 3. (описание на задачи на трети лица, както е изложено в Анекс V)
   - Отчет от изпитания: № DE23OXLA.

     Тестван за тип.
8. НЕ СЕ ОТНАСЯ ЗА СЛУЧАЯ.
9. Декларирано изпълнение:

   Продуктите, предмет на тази декларация за изпълнение, са в съответствие с основните характеристики и изисквания за изпълнение, описани по-долу:
   - Приложен стандарт: EN 12050-1:2015-05, EN 12050-1:2001.
10. Изпълнението на продукта, посочен в точки 1 и 2, е в съответствие с декларираното изпълнение в точка 9.

CZ: Prohlášení o vlastnostech

Prohlášení o vlastnostech EU v souladu s Dodatkem III předpisu (EU) č. 305/2011Â (Předpis pro stavební výrobky)

1. Jedinečný identifikační kód typu výrobku:
   - EN 12050-1
2. Typ, dávka nebo výrobní číslo nebo jakýkoliv prvek umožňující identifikaci stavebního výrobku podle požadavku Článku 11(4):
   - Čerpadla AP80-100 s označením EN 12050-1 na typovém štítku.
3. Zamýšlená použití stavebního výrobku v souladu s příslušnou harmonizovanou technickou specifikací výrobce:
   - Čerpací stanice odpadních vod s fekáliemi s označením EN 12050-1 na typovém štítku.
4. Název, registrovaný obchodní název nebo registrovaná ochranná známka a kontaktní adresa výrobce podle požadavku Článku 11(5):
   - Grundfos Holding A/S

     Poul Due Jensens Vej 7

     8850 Bjerringbro

     Dánsko.
5. NESOUVISÍ.
6. Systém nebo systémy posuzování a ověřování stálosti vlastností stavebního výrobku podle ustanovení Dodatku V:
   - Systém 3.
7. V případě prohlášení o vlastnostech stavebního výrobku zahrnutého v harmonizované normě:
   - TÜV Rheinland LGA Products GmbH, identifikační číslo: 0197.

     Proveden test podle EN 12050-1 v systému 3. (popis úkolů třetí strany podle ustanovení Dodatku V)
   - Zkušební zpráva: Č. DE23OXLA.

     Typ testován.
8. NESOUVISÍ.
9. Prohlašované vlastnosti:

   Výrobky uvedené v tomto Prohlášení o vlastnostech jsou v souladu se základními charakteristikami a požadavky na vlastnosti, jak je popsáno níže:
   - Použitá norma: EN 12050-1:2015-05, EN 12050-1:2001.

10. Vlastnosti výrobku uvedeného v bodech 1 a 2 v souladu s prohlašovanými vlastnostmi v bodě 9.

DE: Leistungserklärung

EU-Leistungserklärung gemäß Anhang III der Verordnung (EU) Nr. 305/2011Â (Bauprodukte-Verordnung)

1. Einmalige Kennnummer des Produkttyps:
   - EN 12050-1
2. Typ, Charge, Seriennummer oder jedes andere Element, das eine Identifizierung des Bauprodukts erlaubt, wie in Artikel 11 (4) vorgeschrieben.
   - Pumpen AP80–100, die auf dem Leistungsschild mit EN 12050-1 gekennzeichnet sind.
3. Verwendungszweck oder Verwendungszwecke des Bauprodukts, gemäß den geltenden harmonisierten technischen Spezifikationen, wie vom Hersteller vorgesehen:
   - Pumpen für die Förderung von fäkalienhaltigem Abwasser, auf dem Typenschild mit EN 12050-1 gekennzeichnet.
4. Name, eingetragener Markenname oder eingetragenes Warenzeichen und Kontaktanschrift des Herstellers, wie in Artikel 11(5) vorgeschrieben.
   - Grundfos Holding A/S

     Poul Due Jensens Vej 7

     8850 Bjerringbro

     Dänemark
5. NICHT RELEVANT.
6. System oder Systeme zur Bewertung und Überprüfung der Leistungsbeständigkeit des Bauprodukts gemäß Anhang V:
   - System 3.
7. Bei der Leistungserklärung bezüglich eines von einer harmonisierten Norm erfassten Bauprodukts:
   - TÜV Rheinland LGA Products GmbH, Kennnummer: 0197.

     Vorgenommene Prüfung gemäß EN 12050-1 unter Anwendung von System 3. (Beschreibung der Aufgaben von unabhängigen Dritten gemäß Anhang V)
   - Prüfbericht: DE23OXLA.

     Typgeprüft.
8. NICHT RELEVANT.
9. Erklärte Leistung:

   Die von dieser Leistungserklärung erfassten Produkte entsprechen den grundlegenden Charakteristika und Leistungsanforderungen, wie im Folgenden beschrieben:
   - Angewandte Norm: EN 12050-1:2015-05, EN 12050-1:2001.

10. Die Leistung des in Punkt 1 und 2 genannten Produkts entspricht der in Punkt 9 erklärten Leistung.

DK: Ydeevnedeklaration

EU-ydeevnedeklaration i henhold til bilag III af forordning (EU) nr. 305/2011Â (Byggevareforordningen)

1. Varetypens unikke identifikationskode:
   - EN 12050-1
2. Type-, parti- eller serienummer eller en anden form for angivelse ved hjælp af hvilken byggevaren kan identificeres som krævet i henhold til artikel 11, stk. 4:
   - AP80-100-pumper der er mærket med EN 12050-1 på typeskiltet.
3. Byggevarens tilsigtede anvendelse eller anvendelser i overensstemmelse med den gældende harmoniserede tekniske specifikation som påtænkt af fabrikanten:
   - Pumper til pumpning af spildevand med fækalier der er mærket med EN 12050-1 på typeskiltet.
4. Fabrikantens navn, registrerede firmabetegnelse eller registrerede varemærke og kontaktadresse som krævet i henhold til artikel 11, stk. 5:
   - Grundfos Holding A/S

     Poul Due Jensens Vej 7

     8850 Bjerringbro

     Danmark.
5. IKKE RELEVANT.
6. Systemet eller systemerne til vurdering og kontrol af at byggevarens ydeevne er konstant, jf. bilag V:
   - System 3.
7. Hvis ydeevnedeklarationen vedrører en byggevare der er omfattet af en harmoniseret standard:
   - TÜV Rheinland LGA Products GmbH, identifikationsnummer: 0197.

     Udført test i henhold til EN 12050-1 efter system 3 (beskrivelse af tredjepartsopgaverne, jf. bilag V).
   - Testrapport: Nr. DE23OXLA.

     Typetestet.
8. IKKE RELEVANT.
9. Deklareret ydeevne:

   De produkter der er omfattet af denne ydeevnedeklaration, er i overensstemmelse med de væsentlige egenskaber og ydelseskrav der er beskrevet i følgende:
   - Anvendt standard: EN 12050-1:2015-05, EN 12050-1:2001.

10. Ydeevnen for den byggevare der er anført i punkt 1 og 2, er i overensstemmelse med den deklarerede ydeevne i punkt 9.

EE: Toimivusdeklaratsioon

EU toimivusdeklaratsioon on kooskõlas EU normatiivi nr. 305/2011 Lisa IIIÂ (Ehitustoote normid)

1. Toote tüübi ainulaadne identifiseerimis kood:
   - EN 12050-1
2. Tüübi-, partii- või tootenumber või mõni teine element mis võimaldab kindlaks teha, et ehitustoode vastab artikli 11(4):
   - AP80-100 pumbad, mille andmeplaadil on tähis EN 12050-1.
3. Ehitustooted on ettenähtud kasutamiseks vastavalt tootja poolt etteantud kasutusaladel järgides tehnilisi ettekirjutusi.
   - Andmeplaadil märgitud EN 12050-1 pumbad on mõeldud fekaale sisaldava heitvee pumpamiseks.
4. Nimetus, registreeritud kaubamärk või registreeritud kaubamärk ja kontaktaadress tootjafirmast peavad olema vastavuses Artikkel 11(5):
   - Grundfos Holding A/S

     Poul Due Jensens Vej 7

     8850 Bjerringbro

     Taani.
5. POLE OLULINE.
6. Süsteemi või süsteemi hindamine ja kinnitamine püsiva jõudlusega ehitustooteks nagu on kirjas Lisa V:
   - Süsteem 3.
7. Toimivusdeklaratsioon järgib ehitustoodete standarditest:
   - TÜV Rheinland LGA Products GmbH, indentifitseerimis number: 0197.

     Testitud vastavalt EN 12050-1 järgi süsteem 3. (kolmandate osapoolte ülesanded nagu on kirjas Lisa V)
   - Uuring: Nr. DE23OXLA.

     Tüüptestitud.
8. POLE OLULINE.
9. Avaldatud jõudlus:

   Toode, mille kohta antud toimivusdeklaratsioon kehtib, on vastavuses põhiomadustega ja jõudlus vajadustega nagu järgnevalt kirjutatud:
   - Kasutatud standard: EN 12050-1:2015-05, EN 12050-1:2001.

10. Toote tuvastatud jõudlus punktides 1 ja 2 on vastavuses toimivusdeklaratsiooni punkti 9.

ES: Declaración de prestaciones

Declaración EU de prestaciones conforme al Anexo III del Reglamento (EU) n.º 305/2011Â (Reglamento de productos de construcción)

1. Código de identificación único del tipo de producto:
   - EN 12050-1
2. Tipo, lote o número de serie, o cualquier otro elemento que facilite la identificación del producto de construcción de acuerdo con los requisitos establecidos en el Artículo 11(4):
   - Bombas AP 80-100 en cuya placa de características figure la norma EN 12050-1.
3. Uso o usos previstos del producto de construcción, conforme a la especificación técnica armonizada correspondiente, según lo previsto por el fabricante:
   - Bombas para el bombeo de aguas residuales que contengan materia fecal en cuya placa de características figure la norma EN 12050-1.
4. Nombre, nombre comercial registrado o marca comercial registrada y domicilio de contacto del fabricante de acuerdo con los requisitos establecidos en el Artículo 11(5):
   - Grundfos Holding A/S

     Poul Due Jensens Vej 7

     8850 Bjerringbro

     Dinamarca.
5. NO CORRESPONDE.
6. Sistema o sistemas de evaluación y verificación de la continuidad de las prestaciones del producto de construcción, de acuerdo con lo establecido en el Anexo V.
   - Sistema 3.
7. Si la declaración de prestaciones concierne a un producto de construcción cubierto por una norma armonizada:
   - TÜV Rheinland LGA Products GmbH, número de identificación: 0197.

     Ensayo ejecutado según las normas EN 12050-1, sistema 3. (Descripción de las tareas de las que deben responsabilizarse otras partes de acuerdo con lo establecido en el Anexo V).
   - Informe de ensayo: n.º DE23OXLA.

     Tipo sometido a ensayo.
8. NO CORRESPONDE.
9. Prestaciones declaradas:

   Los productos que cubre esta declaración de prestaciones satisfacen las características fundamentales y requisitos en materia de prestaciones descritos en:
   - Norma aplicada: EN 12050-1:2015-05, EN 12050-1:2001.

10. Las prestaciones del producto indicado en los puntos 1 y 2 cumplen lo declarado en el punto 9.

FI: Suoritustasoilmoitus

EU-suoritustasoilmoitus laadittu asetuksen 305/2011/EU liitteen III mukaisestiÂ (Rakennustuoteasetus)

1. Tuotetyypin yksilöllinen tunniste:
   - EN 12050-1
2. Tyyppi-, erä- tai sarjanumero tai muu merkintä, jonka ansiosta rakennustuotteet voidaan tunnistaa, kuten 11 artiklan 4 kohdassa edellytetään:
   - AP80-100-pumput, joiden tyyppikilvessä on merkintä EN 12050-1.
3. Valmistajan ennakoima, sovellettavan yhdenmukaistetun teknisen eritelmän mukainen rakennustuotteen aiottu käyttötarkoitus tai -tarkoitukset:
   - Pumput ulosteperäistä materiaalia sisältävien jätevesien pumppaukseen. Arvokilvessä on merkintä EN 12050-1.
4. Valmistajan nimi, rekisteröity kauppanimi tai tavaramerkki sekä osoite, josta valmistajaan saa yhteyden, kuten 11 artiklan 5 kohdassa edellytetään:
   - Grundfos Holding A/S

     Poul Due Jensens Vej 7

     8850 Bjerringbro

     Tanska.
5. EI TARVITA.
6. Rakennustuotteen suoritustason pysyvyyden arviointi- ja varmennusjärjestelmä(t) liitteen V mukaisesti:
   - Järjestelmä 3.
7. Kun kyse on yhdenmukaistetun standardin piiriin kuuluvan rakennustuotteen suoritustasoilmoituksesta:
   - TÜV Rheinland LGA Products GmbH, tunnistenumero: 0197.

     Testaus suoritettu standardien EN 12050-1 ja järjestelmän 3 mukaisesti. (Liitteessä V esitettyjä kolmannen osapuolen tehtävien kuvauksia noudattaen.)
   - Testiraportin nro DE23OXLA.

     Tyyppitestattu.
8. EI TARVITA.
9. Ilmoitetut suoritustasot:

   Tähän suoritustasoilmoitukseen kuuluvien tuotteiden perusominaisuudet ja suoritustasovaatimukset:
   - Sovellettu standardi: EN 12050-1:2015-05, EN 12050-1:2001.

10. Kohdissa 1 ja 2 yksilöidyn tuotteen suoritustasot ovat kohdassa 9 ilmoitettujen suoritustasojen mukaiset.

FR: Déclaration des performances

Déclaration des performances UE conformément à l'Annexe III du Règlement (UE) n° 305/2011Â (Règlement Produits de Construction)

1. Code d'identification unique du type de produit :
   - EN 12050-1
2. Numéro de type, de lot ou de série ou tout autre élément permettant l'identification du produit de construction comme l'exige l'Article 11(4) :
   - Pompes AP80-100 marquées EN 12050-1 sur la plaque signalétique.
3. Usage(s) prévu(s) du produit de construction conformément à la spécification technique harmonisée applicable comme indiqué par le fabricant :
   - Pompe pour la collecte des effluents contenant des matières fécales marquées EN 12050-1 sur la plaque signalétique.
4. Nom, nom de commerce déposé ou marque commerciale déposée et adresse du fabricant comme l'exige l'Article 11(5) :
   - Grundfos Holding A/S

     Poul Due Jensens Vej 7

     8850 Bjerringbro

     Danemark.
5. NON APPLICABLE.
6. Système ou systèmes d'attestation et de vérification de la constance des performances du produit de construction comme stipulé dans l'Annexe V :
   - Système 3.
7. En cas de déclaration des performances d'un produit de construction couvert par une norme harmonisée :
   - TÜV Rheinland LGA Products GmbH, numéro d'identification : 0197.

     Test effectué conformément aux normes EN 12050-1 selon le système 3. (description des tâches de tierce partie comme stipulé dans l'Annexe V)
   - Rapport d'essai : N° DE23OXLA.

     Contrôlé.
8. NON APPLICABLE.
9. Performances déclarées :

   Les produits couverts par cette déclaration des performances sont conformes aux caractéristiques essentielles et aux exigences de performances décrites par la suite :
   - Norme utilisée : EN 12050-1:2015-05, EN 12050-1:2001.

10. Les performances du produit identifié aux points 1 et 2 sont conformes aux performances déclarées au point 9.

GR: Δήλωση απόδοσης

Δήλωση απόδοσης ΕΕ σύμφωνα με το Παράρτημα III του Κανονισμού (ΕΕ) Αρ. 305/2011Α (Κανονισμός για Προϊόντα του Τομέα Δομικών Κατασκευών)

1. Μοναδικός κωδικός ταυτοποίησης του τύπου του προϊόντος:
   - EN 12050-1
2. Αριθμός τύπου, παρτίδας ή σειράς ή οποιοδήποτε άλλο στοιχείο επιτρέπει την ταυτοποίηση του προϊόντος του τομέα των δομικών κατασκευών όπως απαιτείται δυνάμει του Άρθρου 11(4):
   - Αντλίες AP80-100 με σήμανση EN 12050-1 στην πινακίδα.
3. Προτεινόμενη χρήση ή χρήσεις του προϊόντος του τομέα δομικών κατασκευών, σύμφωνα με την ισχύουσα εναρμονισμένη τεχνική προδιαγραφή, όπως προβλέπεται από τον κατασκευαστή:
   - Αντλίες για άντληση ακάθαρτων υδάτων που περιέχουν περιττώματα με σήμανση EN 12050-1 στην πινακίδα.
4. Όνομα, εμπορική επωνυμία ή σήμα κατατεθέν και διεύθυνση επικοινωνίας του κατασκευαστή όπως απαιτείται δυνάμει του Άρθρου 11(5):
   - Grundfos Holding A/S

     Poul Due Jensens Vej 7

     8850 Bjerringbro

     Δανία.
5. ΜΗ ΣΧΕΤΙΚΟ.
6. Σύστημα ή συστήματα αξιολόγησης και επαλήθευσης της σταθερότητας της απόδοσης του προϊόντος του τομέα δομικών κατασκευών όπως καθορίζεται στο Παράρτημα V:
   - Σύστημα 3.
7. Σε περίπτωση δήλωσης απόδοσης που αφορά προϊόν του τομέα δομικών κατασκευών το οποίο καλύπτεται από εναρμονισμένο πρότυπο:
   - TÜV Rheinland LGA Products GmbH, αριθμός ταυτοποίησης: 0197.

     Διενήργησε δοκιμή σύμφωνα με τα EN 12050-1 βάσει του συστήματος 3. (περιγραφή των καθηκόντων του τρίτου μέρους όπως καθορίζονται στο Παράρτημα V)
   - Έκθεση δοκιμής: Αρ. DE23OXLA.

     Έχει υποβληθεί σε δοκιμή τύπου.
8. ΜΗ ΣΧΕΤΙΚΟ.
9. Δηλωθείσα απόδοση:

   Τα προϊόντα που καλύπτονται από την παρούσα δήλωση απόδοσης συμμορφώνονται με τα ουσιώδη χαρακτηριστικά και τις απαιτήσεις απόδοσης όπως περιγράφεται στα ακόλουθα:
   - Πρότυπο που χρησιμοποιήθηκε: EN 12050-1:2015-05, EN 12050-1:2001.

10. Η απόδοση του προϊόντος που ταυτοποιήθηκε στα σημεία 1 και 2 συμμορφώνεται με τη δηλωθείσα απόδοση στο σημείο 9.

HR: Izjava o izvedbi

Izjava EU o izjavi u skladu s aneksom III uredbe (EU) br. 305/2011Â (Uredba za građevinske proizvode)

1. Jedinstveni identifikacijski kod vrste proizvoda:
   - EN 12050-1
2. Vrsta, broj serije, serijski broj ili bilo koji drugi element koji omogućuje identificiranje građevinskog proizvoda u skladu sa člankom 11(4):
   - AP80-100 crpke označene s EN 100 na natpisnoj pločici.
3. Namjena ili uporabe građevinskog proizvoda u skladu s primjenjivim harmoniziranim tehničkim specifikacijama, kao što je predvidio proizvođač:
   - Crpke za ispumpavanje otpadnih voda s fekalijama, označene s EN 12050-1 na natpisnoj pločici.
4. Naziv, registrirani trgovački naziv ili registrirani zaštitni znak i adresa za kontaktiranje proizvođača u skladu sa člankom 11(5):
   - Grundfos Holding A/S

     Poul Due Jensens Vej 7

     8850 Bjerringbro

     Danska.
5. NIJE RELEVANTNO.
6. Procjena jednog ili više sustava i provjera stalnosti rada građevinskog proizvoda, kao što je određeno aneksom V:
   - Sustav 3.
7. U slučaju izjave o izvedbi za građevinski proizvod pokriven harmoniziranim standardom:
   - TÜV Rheinland LGA Products GmbH, identifikacijski broj: 0197.

     Izvršite ispitivanje u skladu s EN 12050-1 u okviru sustava 3. (Opis zadataka trećih strana, kao što je definirano aneksom V)
   - Ispitno izvješće: br. DE23OXLA.

     Ispitana vrsta.
8. NIJE RELEVANTNO.
9. Izjavljena izvedba:

   Proizvodi obuhvaćeni ovom izjavom o izvedbi u skladu su s osnovnim karakteristikama i zahtjevima za izvedbu, kao što je definirano u nastavku:
   - Korištena norma: EN 12050-1:2015-05, EN 12050-1:2001.

10. Izvedba proizvoda identificirana u točkama 1 i 2 u skladu je s izjavljenom izvedbom u točki 9.

HU: Teljesítménynyilatkozat

EU teljesítménynyilatkozat a 305/2011 számú EU rendelet III. mellékletének megfelelőenÂ (Építési termék rendelet)

1. A terméktípus egyedi azonosító kódja:
   - EN 12050-1
2. Típus, adag, sorozatszám, vagy bármilyen más olyan elem, amely lehetővé teszi az építési terméknek a 11. cikk (4) bekezdése alapján megkövetelt azonosítását:
   - AP80-100 szivattyúk, EN 100 jelöléssel az adattáblán.
3. Az építési termék tervezett felhasználása vagy felhasználásai, a vonatkozó harmonizált műszaki előírásoknak megfelelően, a gyártó szándéka szerint:
   - Fekáliatartalmú szennyvíz szivattyúzására szolgáló szivattyúk, EN 12050-1 jelöléssel az adattáblán.
4. A gyártó neve, védjegye, bejegyzett kereskedelmi neve és értesítési címe a 11. cikk (5) bekezdése alapján megkövetelt módon:
   - Grundfos Holding A/S

     Poul Due Jensens Vej 7

     8850 Bjerringbro

     Dánia.
5. NEM RELEVÁNS.
6. Az építési termék teljesítmény állandóságának értékelésére és ellenőrzésére vonatkozó rendszer vagy rendszerek, az V. mellékeltben meghatározott módon:
   - 3-as rendszer.
7. Olyan építési termékre vonatkozó teljesítménynyilatkozat esetén, amelyre kiterjed egy harmonizált szabvány:
   - TÜV Rheinland LGA Products GmbH, azonosító szám: 0197.

     Az EN 12050-1 szerint elvégzett teszt, a 3-as rendszer keretében. (harmadik fél feladatainak leírása az V. mellékletben meghatározott módon)
   - Tesztjegyzőkönyv száma: DE23OXLA.

     Típustesztelve.
8. NEM RELEVÁNS.
9. Megadott teljesítmény:

   Azok a termékek, amelyekre ez a teljesítménynyilatkozat vonatkozik, rendelkeznek azokkal az alapvető jellemzőkkel és kielégítik azokat a teljesítményre vonatkozó követelményeket, amelyeket alább ismertetünk:
   - Alkalmazott szabvány: EN 12050-1:2015-05, EN 12050-1:2001.

10. Az 1-es és 2-es pontban azonosított termék teljesítménye összhangban van a 9. pontban megadott teljesítménnyel.

IT: Dichiarazione di prestazioni

Dichiarazione UE di prestazioni in conformità all'all. III del Regolamento (UE) n. 305/2011Â (regolamento sui prodotti da costruzione)

1. Codice identificativo esclusivo del tipo di prodotto:
   - EN 12050-1
2. Tipo, lotto o numero di serie o qualsiasi altro elemento che consenta l'identificazione del prodotto da costruzione come necessario secondo l'art. 11(4):
   - Pompe AP80-100, marcate con EN 12050-1 sulla targa dei dati identificativi.
3. Utilizzo o utilizzi previsti del prodotto da costruzione, in accordo alla specifica tecnica armonizzata pertinente, come previsto dal fabbricante:
   - Pompe per il pompaggio di acque reflue contenenti materie fecali, marcate con EN 12050-1 sulla targa dei dati identificativi.
4. Denominazione, denominazione commerciale registrata o marchio registrato e indirizzo di contatto del fabbricante secondo l'art. 11(5):
   - Grundfos Holding A/S

     Poul Due Jensens Vej 7

     8850 Bjerringbro

     Danimarca.
5. NON RILEVANTE.
6. Sistema o sistemi di valutazione e verifica della costanza delle prestazioni del prodotto da costruzione come definito sub all. V:
   - Sistema 3.
7. In caso di dichiarazione di prestazioni concernente un prodotto da costruzione conforme a una norma armonizzata:
   - TÜV Rheinland LGA Products GmbH, numero d'identificazione: 0197.

     Test eseguito secondo EN 12050-1 con il sistema 3. (descrizione delle mansioni di terzi come definito sub all. V)
   - Rapporto di prova: N. DE23OXLA.

     Testato per il tipo.
8. NON RILEVANTE.
9. Prestazioni dichiarate:

   I prodotti coperti dalla presente dichiarazione di prestazione sono conformi alle caratteristiche essenziali ed ai requisiti di prestazioni descritti dove segue:
   - Norma applicata: EN 12050-1:2015-05, EN 12050-1:2001.

10. Le prestazioni del prodotto identificato ai punti 1 e 2 sono conformi alle prestazioni dichiarate al punto 9.

LT: Eksploatacinių savybių deklaracija

ES eksploatacinių savybių deklaracija pagal reglamento (ES) Nr. 305/2011 III priedąÀ (Statybos produktų reglamentas)

1. Unikalus produkto tipo identifikacinis kodas:
   - EN 12050-1
2. Tipo, partijos ar serijos numeris ar bet koks kitas elementas, pagal kurį galima identifikuoti statybos produktą, kaip reikalaujama pagal 11 straipsnio 4 dalį:
   - AP80-100 siurbliai, vardinėje plokštelėje pažymėti EN 12050-1.
3. Gamintojo numatyta statybos produkto naudojimo paskirtis ar paskirtys pagal taikomą darniąją techninę specifikaciją:
   - Siurbliai, skirti išsiurbti nuotekas, kurių sudėtyje yra fekalijų, vardinėje plokštelėje pažymėti EN 12050-1.
4. Gamintojo pavadinimas, registruotas komercinis pavadinimas arba registruotas prekės ženklas ir kontaktinis adresas, kaip reikalaujama pagal 11 straipsnio 5 dalį:
   - Grundfos Holding A/S

     Poul Due Jensens Vej 7

     8850 Bjerringbro

     Danija.
5. NETAIKYTINA.
6. Statybos produkto eksploatacinių savybių pastovumo vertinimo ir tikrinimo sistema ar sistemos, kaip nustatyta V priede:
   - Sistema 3.
7. Eksploatacinių savybių deklaracijos, susijusios su statybos produktu, kuriam taikomas darnusis standartas, atveju:
   - TÜV Rheinland LGA Products GmbH, identifikacinis numeris: 0197.

     atliko EN 12050-1 reikalavimus atitinkantį bandymą pagal sistemą 3. (trečiosios šalies užduočių, kaip nustatyta V priede, aprašymas)
   - Bandymo ataskaita: Nr. DE23OXLA.

     Tipas patikrintas.
8. NETAIKYTINA.
9. Deklaruojamos eksploatacinės savybės:

   Produktai, kuriuos apima ši eksploatacinių savybių deklaracija, atitinka esmines charakteristikas ir eksploatacinių savybių reikalavimus, kaip aprašyta:
   - Taikomas standartas: EN 12050-1:2015-05, EN 12050-1:2001.

10. 1 ir 2 punktuose nurodyto produkto eksploatacinės savybės atitinka 9 punkte deklaruojamas eksploatacines savybes.

LV: Ekspluatācijas īpašību deklarācija

ES ekspluatācijas īpašību deklarācija saskaņā ar Regulas (ES) Nr. 305/2011 III pielikumuÂ (Būvizstrādājumu regula)

1. Unikāls izstrādājuma tipa identifikācijas numurs:
   - EN 12050-1
2. Tips, partijas vai sērijas numurs vai kāds cits būvizstrādājuma identifikācijas elements, kā noteikts 11. panta 4. punktā:
   - AP80-100 sūkņi ar apzīmējumu EN 12050-1 uz datu plāksnītes.
3. Būvizstrādājuma paredzētais izmantojums vai izmantojumi saskaņā ar piemērojamo saskaņoto tehnisko specifikāciju, kā paredzējis ražotājs:
   - Izkārnījumus saturošo notekūdeņu sūknēšanai paredzētie sūkņi ar EN 12050-1 apzīmējumu uz datu plāksnītes.
4. Ražotāja nosaukums, reģistrētais komercnosaukums vai reģistrētā preču zīme un kontaktadrese, kā noteikts 11. panta 5. punktā:
   - Grundfos Holding A/S

     Poul Due Jensens Vej 7

     8850 Bjerringbro

     Dānija.
5. NAV ATTIECINĀMS.
6. Ekspluatācijas īpašību noturības novērtējuma un pārbaudes sistēma vai sistēmas, kā noteikts V pielikumā:
   - 3. sistēma.
7. Gadījumā, ja ekspluatācijas īpašību deklarācija attiecas uz būvizstrādājumu, kuram ir saskaņotais standarts:
   - TÜV Rheinland LGA Products GmbH, identifikācijas numurs: 0197.

     Pārbaudi veica saskaņā ar EN 12050-1 atbilstoši 3. sistēmai. (V pielikumā izklāstīto trešo personu uzdevumu apraksts)
   - Pārbaudes ziņojums: Nr. DE23OXLA.

     Tipa pārbaude.
8. NAV ATTIECINĀMS.
9. Deklarētās ekspluatācijas īpašības

   Izstrādājumi, uz kuriem attiecas šī ekspluatācijas īpašību deklarācija, atbilst būtiskiem raksturlielumiem un prasībām pret ekspluatācijas īpašībām, kas aprakstītas tālākminētajos dokumentos.
   - Piemērotais standarts: EN 12050-1:2015-05, EN 12050-1:2001.

10. Pielikuma 1. un 2. punktā norādītā izstrādājuma ekspluatācijas īpašības atbilst 9. punktā norādītajām deklarētajām ekspluatācijas īpašībām.

NL: Prestatieverklaring

Prestatieverklaring van EU in overeenstemming met Bijlage III van verordening (EU) nr. 305/2011Â (Bouwproductenverordening)

1. Unieke identificatiecode van het producttype:
   - EN 12050-1
2. Type-, batch- of serienummer of enig ander element dat identificatie van het bouwproduct mogelijk maakt zoals vereist conform artikel 11(4):
   - AP80-100-pompen gemarkeerd met EN 12050-1 op het typeplaatje.
3. Beoogde toepassing of toepassingen van het bouwproduct, in overeenstemming met de van toepassing zijnde geharmoniseerde technische specificatie, zoals voorzien door de fabrikant:
   - Pompen voor het verpompen van afvalwater dat fecale materie bevat gemarkeerd met EN 12050-1 op het typeplaatje.
4. Naam, gedeponeerde handelsnaam of gedeponeerd handelsmerk en contactadres van de fabrikant zoals vereist conform artikel 11(5):
   - Grundfos Holding A/S

     Poul Due Jensens Vej 7

     8850 Bjerringbro

     Denemarken.
5. NIET RELEVANT.
6. Systeem of systemen voor beoordeling en verificatie van constantheid van prestaties van het bouwproduct zoals beschreven in Bijlage V:
   - Systeem 3.
7. In het geval van de prestatieverklaring voor een bouwproduct dat onder een geharmoniseerde norm valt:
   - TÜV Rheinland LGA Products GmbH, identificatienummer: 0197.

     Uitgevoerde test conform EN 12050-1 onder systeem 3. (beschrijving van de externe taken zoals beschreven in Bijlage V)
   - Testrapport: Nr. DE23OXLA.

     Type getest.
8. NIET RELEVANT.
9. Verklaarde prestatie:

   De producten die vallen onder deze prestatieverklaring zijn in overeenstemming met de essentiële eigenschappen en de prestatievereisten zoals beschreven in het volgende:
   - Gebruikte norm: EN 12050-1:2015-05, EN 12050-1:2001.

10. De prestaties van het product dat is geïdentificeerd in punten 1 en 2 zijn in overeenstemming met de verklaarde prestaties in punt 9.

PL: Deklaracja właściwości użytkowych

Deklaracja właściwości użytkowych UE według załącznika III do dyrektywy (UE) nr 305/2011Â w/s wprowadzania do obrotu wyrobów budowlanych

1. Niepowtarzalny kod identyfikacyjny typu wyrobu:
   - EN 12050-1
2. Numer typu, partii lub serii lub jakikolwiek inny element umożliwiający identyfikację wyrobu budowlanego, wymagany zgodnie z art. 11 ust. 4:
   - Pompy AP80–100 oznaczone EN 12050-1 na tabliczce znamionowej.
3. Przewidziane przez producenta zamierzone zastosowanie lub zastosowania wyrobu budowlanego zgodnie z mającą zastosowanie zharmonizowaną specyfikacją techniczną:
   - Pompy do pompowania ścieków zawierających fekalia, oznaczone na tabliczce znamionowej kodem EN 12050-1.
4. Nazwa, zastrzeżona nazwa handlowa lub zastrzeżony znak towarowy oraz adres kontaktowy producenta, wymagany zgodnie z art. 11 ust. 5:
   - Grundfos Holding A/S

     Poul Due Jensens Vej 7

     8850 Bjerringbro

     Dania.
5. NIE DOTYCZY.
6. System lub systemy oceny i weryfikacji stałości właściwości użytkowych wyrobu budowlanego określone w załączniku V:
   - System 3.
7. W przypadku deklaracji właściwości użytkowych dotyczącej wyrobu budowlanego objętego normą zharmonizowaną:
   - Jednostka certyfikująca TÜV Rheinland LGA Products GmbH, numer identyfikacyjny: 0197.

     przeprowadziła badanie określone w EN 12050-1, w systemie 3 i wydała certyfikat (opis zadań strony trzeciej, określonych w załączniku V)
   - Raport z badań: nr DE23OXLA.

     Certyfikat badania typu.
8. NIE DOTYCZY.
9. Deklarowane właściwości użytkowe:

   Wyroby, których dotyczy niniejsza deklaracja właściwości użytkowych są zgodne z zasadniczymi charakterystykami i wymaganiami określonymi w następujących normach:
   - Zastosowana norma: EN 12050-1:2015-05, EN 12050-1:2001.

10. Właściwości użytkowe wyrobu określone w pkt 1 i 2 są zgodne z właściwościami użytkowymi deklarowanymi w pkt 9.

PT: Declaração de desempenho

Declaração de desempenho UE, em conformidade com o Anexo III do Regulamento (UE) N.º 305/2011Â (Regulamento de Produtos da Construção)

1. Código de identificação exclusivo do tipo de produto:
   - EN 12050-1
2. Tipo, lote ou número de série ou qualquer outro elemento que permita a identificação do produto de construção, em conformidade com o Artigo 11(4):
   - Bombas AP80-100 com a marca EN 12050-1 na chapa de características.
3. Utilização ou utilizações prevista(s) do produto de construção, em conformidade com a especificação técnica harmonizada aplicável, conforme previsto pelo fabricante:
   - Bombas para bombeamento de águas residuais com conteúdo de matéria fecal com a indicação EN 12050-1 na chapa de características.
4. Nome, nome comercial registado ou marca registada e endereço de contacto do fabricante, em conformidade com o Artigo 11(5):
   - Grundfos Holding A/S

     Poul Due Jensens Vej 7

     8850 Bjerringbro

     Dinamarca.
5. NÃO RELEVANTE.
6. Sistema ou sistemas de avaliação e verificação da regularidade do desempenho do produto de construção, conforme definido no Anexo V:
   - Sistema 3.
7. Em caso de declaração de desempenho referente a um produto de construção abrangido por uma norma harmonizada:
   - TÜV Rheinland LGA Products GmbH, número de identificação: 0197.

     Teste realizado em conformidade com EN 12050-1 ao abrigo do sistema 3. (descrição das tarefas de partes terceiras, conforme definido no Anexo V)
   - Relatório de teste: N.º DE23OXLA.

     Testado.
8. NÃO RELEVANTE.
9. Desempenho declarado:

   Os produtos abrangidos por esta declaração de desempenho cumprem as características essenciais e os requisitos de desempenho conforme descritos em:
   - Norma utilizada: EN 12050-1:2015-05, EN 12050-1:2001.

10. O desempenho do produto identificado nos pontos 1 e 2 encontra-se em conformidade com o desempenho declarado no ponto 9.

RO: Declarație de performanță

Declarație UE de performanță în conformitate cu anexa III a Regulamentului (UE) nr 305/2011Â (reglementare privind produsele pentru construcţii)

1. Cod unic de identificare a tipului de produs:
   - EN 12050-1
2. Tipul, lotul sau seria, sau orice alt element care permite identificarea produsului pentru construcții după cum este necesar în conformitate cu articolul 11 (4):
   - Pompe AP80-100 marcate cu EN 12050-1 pe plăcuța de identificare.
3. Utilizarea sau utilizările preconizate ale produsului pentru construcții, în conformitate cu specificația tehnică armonizată aplicabilă, astfel cum este prevăzut de către producător:
   - Pompe pentru pomparea apei uzate conținând materii fecale, marcate cu EN 12050-1 pe placa de identificare.
4. Numele, denumirea comercială înregistrată sau marca înregistrată și adresa de contact a fabricantului cerute conform cu articolului 11 (5):
   - Grundfos Holding A/S

     Poul Due Jensens Vej 7

     8850 Bjerringbro

     Danemarca.
5. NU ESTE RELEVANT.
6. Sistemul sau sistemele de evaluare și verificare a constanței performanței produsului pentru construcții astfel cum este prevăzut în anexa V:
   - Sistemul 3.
7. În cazul declarației de performanță pentru un produs pentru construcții specificat într-un standard armonizat:
   - TÜV Rheinland LGA Products GmbH, număr de identificare: 0197.

     Test efectuat conform EN 12050-1 potrivit sistemului 3. (descrierea sarcinilor terței părți așa cum este prevăzut în anexa V)
   - Raport de testare: Nr. DE23OXLA.

     Tip testat.
8. NU ESTE RELEVANT.
9. Performanță declarată:

   Produsele specificate de această declarație de performanță sunt în conformitate cu caracteristicile esențiale și cerințele de performanță descrise în cele ce urmează:
   - Standard utilizat: EN 12050-1:2015-05, EN 12050-1:2001.

10. Performanța produsului identificat la punctele 1 și 2 este în conformitate cu performanța declarată la punctul 9.

RS: Deklaracija o performansama

EU deklaracija o performansama u skladu sa Aneksom III propisa (EU) br. 305/2011Â (propis o konstrukciji proizvoda)

1. Jedinstvena identifikaciona šifra tipa proizvoda:
   - EN 12050-1
2. Tip, serija ili serijski broj ili neki drugi element koji omogućava identifikaciju konstrukcije proizvoda, kako je propisano shodno Članu 11(4):
   - AP80-100 pumpe označene sa EN 100 na natpisnoj pločici.
3. Predviđena namena ili predviđene namene konstruisanog proizvoda u skladu sa važećim i usklađenim tehničkim specifikacijama, kako je predvideo proizvođač:
   - Pumpe za pumpanje otpadnih voda sa fekalnim materijama na natpisnoj pločici imaju oznaku EN 12050-1.
4. Naziv, registrovana trgovačka marka ili registrovani zaštitni znak i kontakt adresa proizvođača kako je propisano na osnovu Člana 11(5):
   - Grundfos Holding A/S

     Poul Due Jensens Vej 7

     8850 Bjerringbro

     Danska.
5. NIJE RELEVANTNO.
6. Sistem ili sistemi za procenu i verifikaciju konstantnosti performansi konstruisanog proizvoda, kako je predviđeno u Aneksu V:
   - Sistem 3.
7. U slučaju deklaracije o performansama koja se odnosi na konstruisani proizvod koji je obuhvaćen usklađenim standardom:
   - TÜV Rheinland LGA Products GmbH, identifikacioni broj: 0197.

     Izvršeno ispitivanje u skladu sa EN 12050-1 na osnovu sistema 3 (opis zadataka treće strane kako je opisano u Aneksu V).
   - Izveštaj o ispitivanju: br. DE23OXLA.

     Tip - testirano.
8. NIJE RELEVANTNO.
9. Deklarisane performanse:

   Proizvodi koji su obuhvaćeni ovom deklaracijom o performansama usklađeni su sa osnovnim karakteristikama i zahtevima za performansama, kako je nadalje opisano:
   - Upotrebljeni standard: EN 12050-1:2015-05, EN 12050-1:2001.

10. Performanse proizvoda identifikovanog u tačkama 1 i 2 u saglasnosti su s deklarisanim performansama u tački 9.

SE: Prestandadeklaration

EU prestandadeklaration enligt bilaga III till förordning (EU) nr 305/2011Â (byggproduktförordningen)

1. Produkttypens unika identifikationskod:
   - EN 12050-1
2. Typ-, parti- eller serienummer eller någon annan beteckning som möjliggör identifiering av byggprodukter i enlighet med artikel 11.4:
   - AP80-100-pumpar märkta med EN 12050-1 på typskylten.
3. Byggproduktens avsedda användning eller användningar i enlighet med den tillämpliga, harmoniserade tekniska specifikationen, såsom förutsett av tillverkaren:
   - Pumpar för pumpning av avloppsvatten innehållande fekalier märkta med EN 12050-1 på typskylten.
4. Tillverkarens namn, registrerade företagsnamn eller registrerade varumärke samt kontaktadress enligt vad som krävs i artikel 11.5:
   - Grundfos Holding A/S

     Poul Due Jensens Vej 7

     8850 Bjerringbro

     Danmark.
5. EJ TILLÄMPLIGT.
6. Systemet eller systemen för bedömning och fortlöpande kontroll av byggproduktens prestanda enligt bilaga V:
   - System 3.
7. För det fall att prestandadeklarationen avser en byggprodukt som omfattas av en harmoniserad standard:
   - TÜV Rheinland LGA Products GmbH, identifikationsnummer: 0197.

     Utförde provning enligt EN 12050-1 under system 3. (beskrivning av tredje parts uppgifter såsom de anges i bilaga V)
   - Testrapport: Nr DE23OXLA.

     Typprovad.
8. EJ TILLÄMPLIGT.
9. Angiven prestanda:

   Produkterna som omfattas av denna prestandadeklaration överensstämmer med de väsentliga egenskaperna och prestandakraven i följande:
   - Tillämpad standard: EN 12050-1:2015-05, EN 12050-1:2001.

10. Prestandan för den produkt som anges i punkterna 1 och 2 överensstämmer med den prestanda som anges i punkt 9.

SI: Izjava o delovanju

Izjava EU o delovanju v skladu z Dodatkom III Uredbe (EU) št. 305/2011Â (uredba o gradbenih proizvodih)

1. Edinstvena identifikacijska koda za tip izdelka:
   - EN 12050-1
2. Tip, serijska številka ali kateri koli drug element, ki dovoljuje identifikacijo gradbenega proizvoda, kot to zahteva člen 11(4):
   - Črpalke AP80-100 z oznako EN 100 na tipski ploščici.
3. Predvidena uporaba gradbenega proizvoda v skladu z veljavnimi harmoniziranimi tehničnimi specifikacijami, kot jo predvideva proizvajalec:
   - Črpalke za črpanje odpadne vode, ki vsebuje fekalije, z oznako EN 12050-1 na tipski ploščici.
4. Ime, registrirano trgovsko ime ali registrirana blagovna znamka in naslov proizvajalca, kot zahteva člen 11(5):
   - Grundfos Holding A/S

     Poul Due Jensens Vej 7

     8850 Bjerringbro

     Danska.
5. NI POMEMBNO.
6. Sistem ali sistemi ocenjevanja in preverjanja stalnosti delovanja gradbenega proizvoda, kot je opredeljeno v Dodatku V:
   - Sistem 3.
7. Če izjavo o delovanju gradbenega proizvoda pokriva harmonizirani standard:
   - TÜV Rheinland LGA Products GmbH, identifikacijska številka: 0197.

     Test izveden v skladu z EN 12050-1 v sklopu sistema 3. (opis nalog tretje osebe, kot to določa Dodatek V)
   - Testno poročilo: št. DE23OXLA.

     Testirano glede tipa.
8. NI POMEMBNO.
9. Deklarirano delovanje:

   Proizvodi, ki jih krije ta izjava o delovanju, so skladni z bistvenimi lastnostmi in zahtevami delovanja, kot je opisano v nadaljevanju:
   - Uporabljeni standard: EN 12050-1:2015-05, EN 12050-1:2001.

10. Delovanje proizvoda, identificiranega pod točkama 1 in 2, je skladno z deklariranim delovanjem pod točko 9.

SK: Vyhlásenie o parametroch

Vyhlásenie o parametroch EU v súlade s prílohou III nariadenia (EÚ) č. 305/2011Â (Nariadenie o stavebných výrobkoch)

1. Jedinečný identifikačný kód typu výrobku:
   - EN 12050-1
2. Typ, číslo výrobnej dávky alebo sériové číslo, alebo akýkoľvek iný prvok umožňujúci identifikáciu stavebného výrobku, ako sa vyžaduje podľa článku 11 ods. 4:
   - Čerpadlá AP80-100 s označením EN 12050-1 na typovom štítku.
3. Zamýšľané použitia stavebného výrobku, ktoré uvádza výrobca, v súlade s uplatniteľnou harmonizovanou technickou špecifikáciou:
   - Čerpadlá určené na čerpanie splaškov s obsahom fekálií s označením EN 12050-1 na typovom štítku.
4. Názov, registrovaný obchodný názov alebo registrovaná obchodná značka a kontaktná adresa výrobcu podľa požiadaviek článku 11, ods. 5:
   - Grundfos Holding A/S

     Poul Due Jensens Vej 7

     8850 Bjerringbro

     Dánsko.
5. NEVZŤAHUJE SA.
6. Systém alebo systémy posudzovania a overovania nemennosti parametrov stavebného výrobku podľa ustanovení prílohy V:
   - Systém 3.
7. V prípade vyhlásenia o parametroch týkajúceho sa stavebného výrobku, na ktorý sa vzťahuje harmonizovaná norma:
   - TÜV Rheinland LGA Products GmbH, identifikačné číslo: 0197.

     Vykonal skúšku podľa EN 12050-1 v systéme 3. (popis úloh tretej strany, ako sa uvádzajú v prílohe V)
   - Skúšobná správa: Č. DE23OXLA.

     Typovo skúšaný.
8. NEVZŤAHUJE SA.
9. Deklarované parametre:

   Výrobky, na ktoré sa vzťahuje toto vyhlásenie o parametroch, vyhovujú podstatnými vlastnosťami a parametrami nasledovne:
   - Použitá norma: EN 12050-1:2015-05, EN 12050-1:2001.

10. Parametre výrobku uvedené v bodoch 1 a 2 sú v zhode s deklarovanými parametrami v bode 9.

TR: Performans beyanı

305/2011 sayılı AB Yönetmeliği AB III'e uygun olarak performans beyanıÂ (İnşaat Ürünü Yönetmeliği)

1. Ürün tipi özel tanımlama kodu:
   - EN 12050-1
2. Gereken şekil inşaat ürününün Madde 11(4)'e göre tanımlanmasına izin veren tip, parti, seri numarası veya başka bir öğe:
   - Etiketinde EN 12050-1 ifadesi yer alan AP80-100 pompalar.
3. Üretici tarafından öngörülen biçimde ilgili uyumlu teknik özelliklere uygun olarak inşaat ürününün amaçlanan kullanımı ve kullanımları:
   - Dışkı içeren atık suların pompalanmasına yönelik, etiketinde EN 12050-1 bilgisi bulunan pompalar.
4. Madde 11(5)'e göre gereken şekilde üreticinin adı, tescilli ticari adı veya tescilli ticari markası ve iletişim adresi:
   - Grundfos Holding A/S

     Poul Due Jensens Vej 7

     8850 Bjerringbro

     Danimarka.
5. İLGİLİ DEĞİL.
6. Ek V'te belirtilen şekilde inşaat ürününün performansının tutarlılığının değerlendirilmesi ve doğrulanmasına yönelik sistem veya sistemler:
   - Sistem 3.
7. Uyumlu bir standart kapsamındaki bir inşaat ürünüyle ilgili performans beyanı durumunda:
   - TÜV Rheinland LGA Products GmbH, tanımlama numarası: 0197.

     EN 12050-1'e göre sistem 3 altında gerçekleştirilen test. (Ek V'te belirtilen şekilde üçüncü taraf işlemlerin açıklaması)
   - Test raporu: No. DE23OXLA.

     Tip test edilmiş.
8. İLGİLİ DEĞİL.
9. Beyan edilen performans:

   Bu performans beyanı kapsamına giren ürünler, aşağıda belirtilen şekilde temel özelliklere ve performans gereksinimlerine uygundur:
   - Kullanılan standart: EN 12050-1:2015-05, EN 12050-1:2001.

10. 1. ve 2. noktalarda belirtilen ürünün performansı, 9. noktada beyan edilen performansa uygundur.

UA: Декларація показників

Декларація ЄС щодо показників будівельної продукції згідно з Додатком III Регламенту (ЄС) № 305/2011Â (Регламент на конструкційні, будівельні матеріали та продукцію)

1. Код однозначної ідентифікації типу продукту:
   - EN 12050-1
2. Тип, номер партії, номер серії або інший параметр, що дозволяє ідентифікувати продукт для встановлення в будівлях згідно Статті 11(4):
   - Насоси AP80-100 мають маркування EN 12050-1 на заводській табличці.
3. Цільове використання будівельної продукції згідно застосовних погоджених технічних умов, зазначених виробником:
   - Насоси для перекачування стічних вод із фекаліями мають позначення EN 12050-1 на фірмовій табличці.
4. Назва, зареєстроване торгове ім'я або зареєстрована торгова марка та контактна адреса виробника згідно Статті 11(5):
   - Grundfos Holding A/S

     Poul Due Jensens Vej 7

     8850 Bjerringbro

     Данія.
5. НЕ ЗАСТОСОВУЄТЬСЯ.
6. Система або системи оцінки та перевірки стабільності показників будівельної продукції згідно Додатку:
   - Система 3.
7. Якщо декларація щодо показників стосується будівельної продукції, що підпадає під гармонізований стандарт:
   - ТÜV Rheinland LGA Products GmbH, ідентифікаційний номер: 0197.

     Тест виконаний відповідно до EN 12050-1 за системи 3. (опис завдань третьої сторони відповідно до Додатку)
   - Звіт про випробування: № DE23OXLA.

     Типові випробування пройдені.
8. НЕ ЗАСТОСОВУЄТЬСЯ.
9. Задекларовані показники

   Продукти, що підпадають під цю декларацію, відповідають основним характеристикам і вимогам до показників, зазначеним нижче:
   - Застосовний стандарт: EN 12050-1:2015-05, EN 12050-1:2001.
10. Показникі продукту, вказані в пунктах 1 і 2, відповідають зазначеним показникам із пункту 9.

CN: 产品性能声明

EU 产品性能声明，根据欧盟第 305/2011 号法规 Â（建筑用产品法规）附录三的要求提供

1. 产品类型的唯一识别码：
   - EN 12050-1
2. 按照第 11（4）条规定应提供的产品类型、批次、序列号或其它可用来识别建筑产品的标识：
   - 铭牌上标有“EN 12050-1”字样的 AP80-100 泵。
3. 制造商预见的建筑产品用途（与适用的统一技术指标相一致）：
   - 铭牌上有"EN 12050-1"字样的、用于抽取含渣废水的水泵。
4. 按照第 11（5）条规定应提供的制造商名称、注册商户名称或注册商标以及地址等信息。
   - Grundfos Holding A/S

     Poul Due Jensens Vej 7

     8850 Bjerringbro

     丹麦
5. 不适用
6. 按照附录五规定应提供的建筑产品性能一致性评估和验证系统：
   - 系统 3。
7. 如果产品性能声明中涉及的某个建筑产品属于某个协调标准的管辖范围：
   - TÜV Rheinland 的 LGA 产品 GmbH，识别号码：0197.

     根据 EN 12050-1 的规定在系统 3 的环境中进行了性能测试（根据附录五的规定提供了第三方在测试中的任务）
   - 测试报告：编号 DE23OXLA。

     已通过测试。
8. 不适用
9. 声明的性能：

   本产品性能声明中所涉及的产品符合以下标准所规定的主要特性和性能指标：
   - 所用标准： EN 12050-1:2015-05, EN 12050-1:2001.
10. 第 1 点和第 2 点中所认定的产品达到第 9 点中所声明的性能。

EU declaration of performance reference number: 99926157

Székesfehérvár, 15.02.2024

Zoltán Lajtos
MUNI Solutions Value Stream Director
Grundfos Holding A/S
Poul Due Jensens Vej 7
8850 Bjerringbro, Denmark
www.grundfos.com

GB: Declaration of performance

UK declaration of performance in accordance with The Construction Products Regulation 2019

1. Unique identification code of the product type:
   - EN 12050-1
2. Type, batch or serial number or any other element allowing identification of the construction product as required pursuant to Article 11(4):
   - AP80-100 pumps marked with EN 12050-1 on the nameplate.
3. Intended use or uses of the construction product, in accordance with the applicable harmonised technical specification, as foreseen by the manufacturer:
   - Pumps for pumping of wastewater containing faecal matter marked with EN 12050-1 on the nameplate.
4. Name, registered trade name or registered trade mark and contact address of the manufacturer as required pursuant to Article 11(5):
   - Grundfos Holding A/S

     Poul Due Jensens Vej 7

     8850 Bjerringbro

     Denmark.
5. NOT RELEVANT.
6. System or systems of assessment and verification of constancy of performance of the construction product as set out in Annex V:
   - System 3.
7. In case of the declaration of performance concerning a construction product covered by a harmonised standard:
   - TÜV Rheinland LGA Products GmbH, identification number: 0197.

     Performed test according to EN 12050-1 under system 3. (description of the third-party tasks as set out in Annex V)
   - Test report: No. DE23OXLA.

     Type-tested.
8. NOT RELEVANT.
9. Declared performance:

   The products covered by this declaration of performance are in compliance with the essential characteristics and the performance requirements as described in the following:
   - Standard used: EN 12050-1:2015-05, EN 12050-1:2001.

10. The performance of the product identified in points 1 and 2 is in conformity with the declared performance in point 9.

Signature

UK declaration of performance reference number: 99926157
Székesfehérvár, 15.01.2024

Zoltán Lajtos
MUNI Solutions Value Stream Director
Grundfos Holding A/S
Poul Due Jensens Vej 7
8850 Bjerringbro, Denmark
www.grundfos.com

Argentina
Bombas GRUNDFOS de Argentina S.A.
Ruta Panamericana km. 37.500industin
1619 - Garín Pcia. de B.A.
Tel.: +54-3327 414 444
Fax: +54-3327 45 3190

Australia
GRUNDFOS Pumps Pty. Ltd.
P.O. Box 2040
Regency Park
South Australia 5942
Tel.: +61-8-8461-4611
Fax: +61-8-8340-0155

Austria
GRUNDFOS Pumpen Vertrieb
Ges.m.b.H.
Grundfosstraße 2
A-5082 Grödig/Salzburg
Tel.: +43-6246-883-0
Fax: +43-6246-883-30

Belgium
N.V. GRUNDFOS Bellux S.A.
Boomsesteenweg 81-83
B-2630 Aartselaar
Tel.: +32-3-870 7300
Fax: +32-3-870 7301

Bosnia and Herzegovina
GRUNDFOS Sarajevo
Zmaja od Bosne 7-7A
BiH-71000 Sarajevo
Tel.: +387 33 592 480
Fax: +387 33 590 465
www.ba.grundfos.com
E-mail: grundfos@bih.net.ba

Brazil
BOMBAS GRUNDFOS DO BRASIL
Av. Humberto de Alencar Castelo
Branco, 630
CEP 09850 - 300
São Bernardo do Campo - SP
Tel.: +55-11 4393 5533
Fax: +55-11 4343 5015

Bulgaria
Grundfos Bulgaria EOOD
Slatina District
Iztochna Tangenta street no. 100
BG - 1592 Sofia
Tel.: +359 2 49 22 200
Fax: +359 2 49 22 201
E-mail: bulgaria@grundfos.bg

Canada
GRUNDFOS Canada inc.
2941 Brighton Road
Oakville, Ontario
L6H 6C9
Tel.: +1-905 829 9533
Fax: +1-905 829 9512

China
GRUNDFOS Pumps (Shanghai) Co. Ltd.
10F The Hub, No. 33 Suhong Road
Minhang District
Shanghai 201106 PRC
Tel.: +86 21 612 252 22
Fax: +86 21 612 253 33

Columbia
GRUNDFOS Colombia S.A.S.
Km 1.5 vía Siberia-Cota Conj. Potrero
Chico,
Parque Empresarial Arcos de Cota Bod.
1A.
Cota, Cundinamarca
Tel.: +57(1)-2913444
Fax: +57(1)-8764586

Croatia
GRUNDFOS CROATIA d.o.o.
Buzinski prilaz 38, Buzin
HR-10010 Zagreb
Tel.: +385 1 6595 400
Fax: +385 1 6595 499
www.hr.grundfos.com

Czech Republic
GRUNDFOS Sales Czechia and Slovakia
s.r.o.
Čajkovského 21
779 00 Olomouc
Tel.: +420-585-716 111

Denmark
GRUNDFOS DK A/S
Martin Bachs Vej 3
DK-8850 Bjerringbro
Tel.: +45-87 50 50 50
Fax: +45-87 50 51 51
E-mail: info_GDK@grundfos.com
www.grundfos.com/DK

Estonia
GRUNDFOS Pumps Eesti OÜ
Peterburi tee 92G
11415 Tallinn
Tel.: + 372 606 1690
Fax: + 372 606 1691

Finland
OY GRUNDFOS Pumput AB
Trukkikuja 1
FI-01360 Vantaa
Tel.: +358-(0) 207 889 500

France
Pompes GRUNDFOS Distribution S.A.
Parc d'Activités de Chesnes
57, rue de Malacombe
F-38290 St. Quentin Fallavier (Lyon)
Tel.: +33-4 74 82 15 15
Fax: +33-4 74 94 10 51

Germany
GRUNDFOS GMBH
Schlüterstr. 33
40699 Erkrath
Tel.: +49-(0) 211 929 69-0
Fax: +49-(0) 211 929 69-3799
E-mail: infoservice@grundfos.de
Service in Deutschland:
kundendienst@grundfos.de

Greece
GRUNDFOS Hellas A.E.B.E.
20th km. Athinon-Markopoulou Av.
P.O. Box 71
GR-19002 Peania
Tel.: +0030-210-66 83 400
Fax: +0030-210-66 46 273

Hong Kong
GRUNDFOS Pumps (Hong Kong) Ltd.
Unit 1, Ground floor, Siu Wai industrial
Centre
29-33 Wing Hong Street & 68 King Lam
Street, Cheung Sha Wan
Kowloon
Tel.: +852-27861706 / 27861741
Fax: +852-27858664

Hungary
GRUNDFOS South East Europe Kft.
Tópark u. 8
H-2045 Törökbálint
Tel.: +36-23 511 110
Fax: +36-23 511 111

India
GRUNDFOS Pumps India Private
Limited
118 Old Mahabalipuram Road
Thoraipakkam
Chennai 600 097
Tel.: +91-44 2496 6800

Indonesia
PT GRUNDFOS Pompa
Graha intirub Lt. 2 & 3
Jln. Cililitan Besar No.454. Makasar,
Jakarta Timur
ID-Jakarta 13650
Tel.: +62 21-469-51900
Fax: +62 21-460 6910 / 460 6901

Ireland
GRUNDFOS (Ireland) Ltd.
Unit A, Merrywell Business Park
Ballymount Road Lower
Dublin 12
Tel.: +353-1-4089 800
Fax: +353-1-4089 830

Italy
GRUNDFOS Pompe Italia S.r.l.
Via Gran Sasso 4
I-20060 Truccazzano (Milano)
Tel.: +39-02-95838112
Fax: +39-02-95309290 / 95838461

Japan
GRUNDFOS Pumps K.K.
1-2-3, Shin-Miyakoda, Kita-ku
Hamamatsu
431-2103 Japan
Tel.: +81 53 428 4760
Fax: +81 53 428 5005

Kazakhstan
Grundfos Kazakhstan LLP
7' Kyz-Zhibek Str., Kok-Tobe micr.
KZ-050020 Almaty Kazakhstan
Tel.: +7 (727) 227-98-55/56

Korea
GRUNDFOS Pumps Korea Ltd.
6th Floor, Aju Building 679-5
Yeoksam-dong, Kangnam-ku, 135-916
Seoul, Korea
Tel.: +82-2-5317 600
Fax: +82-2-5633 725

Latvia
SIA GRUNDFOS Pumps Latvia
Deglava biznesa centrs
Augusta Deglava ielā 60
LV-1035, Rīga,
Tel.: + 371 714 9640, 7 149 641
Fax: + 371 914 9646

Lithuania
GRUNDFOS Pumps UAB
Smolensko g. 6
LT-03201 Vilnius
Tel.: + 370 52 395 430
Fax: + 370 52 395 431

Malaysia
GRUNDFOS Pumps Sdn. Bhd.
7 Jalan Peguam U1/25
Glenmarie industrial Park
40150 Shah Alam, Selangor
Tel.: +60-3-5569 2922
Fax: +60-3-5569 2866

Mexico
Bombas GRUNDFOS de México
S.A. de C.V.
Boulevard TLC No. 15
Parque industrial Stiva Aeropuerto
Apodaca, N.L. 66600
Tel.: +52-81-8144 4000
Fax: +52-81-8144 4010

Netherlands
GRUNDFOS Netherlands
Veluwezoom 35
1326 AE Almere
Postbus 22015
1302 CA ALMERE
Tel.: +31-88-478 6336
Fax: +31-88-478 6332
E-mail: info_gnl@grundfos.com

New Zealand
GRUNDFOS Pumps NZ Ltd.
17 Beatrice Tinsley Crescent
North Harbour Industrial Estate
Albany, Auckland
Tel.: +64-9-415 3240
Fax: +64-9-415 3250

Norway
GRUNDFOS Pumper A/S
Strømsveien 344
Postboks 235, Leirdal
N-1011 Oslo
Tel.: +47-22 90 47 00
Fax: +47-22 32 21 50

Poland
GRUNDFOS Pompy Sp. z o.o.
ul. Klonowa 23
Baranowo k. Poznania
PL-62-081 Przeźmierowo
Tel.: (+48-61) 650 13 00
Fax: (+48-61) 650 13 50

Portugal
Bombas GRUNDFOS Portugal, S.A.
Rua Calvet de Magalhães, 241
Apartado 1079
P-2770-153 Paço de Arcos
Tel.: +351-21-440 76 00
Fax: +351-21-440 76 90

Romania
GRUNDFOS Pompe România SRL
S-PARK BUSINESS CENTER, Clădirea A2, etaj 2
Str. Tipografilor, Nr. 11-15, Sector 1, Cod 013714
Bucuresti, Romania
Tel.: 004 021 2004 100
E-mail: romania@grundfos.ro

Serbia
Grundfos Srbija d.o.o.
Omladinskih brigada 90b
11070 Novi Beograd
Tel.: +381 11 2258 740
Fax: +381 11 2281 769
www.rs.grundfos.com

Singapore
GRUNDFOS (Singapore) Pte. Ltd.
25 Jalan Tukang
Singapore 619264
Tel.: +65-6681 9688
Faxax: +65-6681 9689

Slovakia
GRUNDFOS s.r.o.
Prievozská 4D 821 09 BRATISLAVA
Tel.: +421 2 5020 1426
sk.grundfos.com

Slovenia
GRUNDFOS LJUBLJANA, d.o.o.
Leskoškova 9e, 1122 Ljubljana
Tel.: +386 (0) 1 568 06 10
Fax: +386 (0)1 568 06 19
E-mail: tehnika-si@grundfos.com

South Africa
GRUNDFOS (PTY) LTD
16 Lascelles Drive, Meadowbrook Estate
1609 Germiston, Johannesburg
Tel.: (+27) 10 248 6000
Fax: (+27) 10 248 6002
E-mail: lgradidge@grundfos.com

Spain
Bombas GRUNDFOS España S.A.
Camino de la Fuentecilla, s/n
E-28110 Algete (Madrid)
Tel.: +34-91-848 8800
Fax: +34-91-628 0465

Sweden
GRUNDFOS AB
Box 333 (Lunnagårdsgatan 6)
431 24 Mölndal
Tel.: +46 31 332 23 000
Fax: +46 31 331 94 60

Switzerland
GRUNDFOS Pumpen AG
Bruggacherstrasse 10
CH-8117 Fällanden/ZH
Tel.: +41-44-806 8111
Fax: +41-44-806 8115

Taiwan
GRUNDFOS Pumps (Taiwan) Ltd.
7 Floor, 219 Min-Chuan Road
Taichung, Taiwan, R.O.C.
Tel.: +886-4-2305 0868
Fax: +886-4-2305 0878

Thailand
GRUNDFOS (Thailand) Ltd.
92 Chaloem Phrakiat Rama 9 Road
Dokmai, Pravej, Bangkok 10250
Tel.: +66-2-725 8999
Fax: +66-2-725 8998

Turkey
GRUNDFOS POMPA San. ve Tic. Ltd. Sti.
Gebze Organize Sanayi Bölgesi
Ihsan dede Caddesi
2. yol 200. Sokak No. 204
41490 Gebze/ Kocaeli
Tel.: +90 - 262-679 7979
Fax: +90 - 262-679 7905
E-mail: satis@grundfos.com

Ukraine
ТОВ "ГРУНДФОС УКРАЇНА"
Бізнес Центр Європа
Столичне шосе, 103
м. Київ, 03131, Україна
Tel.: (+38 044) 237 04 00
Fax: (+38 044) 237 04 01
E-mail: ukraine@grundfos.com

United Arab Emirates
GRUNDFOS Gulf Distribution
P.O. Box 16768
Jebel Ali Free Zone, Dubai
Tel.: +971 4 8815 166
Fax: +971 4 8815 136

United Kingdom
GRUNDFOS Pumps Ltd.
Grovebury Road
Leighton Buzzard/Beds. LU7 4TL
Tel.: +44-1525-850000
Fax: +44-1525-850011

U.S.A.
Global Headquarters for WU
856 Koomey Road
Brookshire, Texas 77423 USA
Phone: +1-630-236-5500

Uzbekistan
Grundfos Tashkent, Uzbekistan
The Representative Office of Grundfos Kazakhstan in Uzbekistan
38a, Oybek street, Tashkent
Tel.: (+998) 71 150 3290 / 71 150 3291
Fax: (+998) 71 150 3292

Trademarks displayed in this material, including but not limited to Grundfos and the Grundfos logo, are registered trademarks owned by The Grundfos Group. © 2024 Grundfos Holding A/S, all rights reserved.

99926157	**08.2024**
ECM: 1401615	