DMX 227

Dosing pump

Installation and operating instructions

DMX 227
Installation and operating instructions
Other languages
http://net.grundfos.com/qr/i/QR99559294

GRUNDFOS

DMX 227

English (GB)

Installation and operating instructions 4
Appendix A 23
Appendix B 24

Original installation and operating instructions

Table of contents

1. General information . . . 4
1.1 Hazard statements . . . 4
1.2 Notes . . . 4
1.3 Introduction . . . 5
1.4 Applications . . . 5
1.5 Qualification and training of personnel . . . 5

2. Safety . . . 5
2.1 Risks when safety instructions are not observed . . . 5
2.2 Safety-conscious working . . . 5
2.3 Safety instructions for the operator and user . . . 5
2.4 Safety instructions for maintenance, inspection and installation work . . . 5
2.5 Unauthorised modification and manufacture of spare parts . . . 6
2.6 Improper operating methods . . . 6
2.7 Safety of the system in the event of a failure in the dosing system . . . 6

3. Technical data . . . 6
3.1 Identification . . . 6
3.2 Pump types . . . 8
3.3 Pump performance . . . 8
3.4 Suction heights . . . 9
3.5 Ambient and operating conditions . . . 9
3.6 Dosing medium . . . 9
3.7 Electrical data . . . 9
3.8 Materials . . . 9
3.9 Weights . . . 9
3.10 Dimensional sketches . . . 10

4. Transport and storage . . . 12
4.1 Delivery . . . 12
4.2 Intermediate storage . . . 12
4.3 Unpacking . . . 12
4.4 Return . . . 12

5. Installation . . . 13
5.1 Optimum installation . . . 13
5.2 Installation tips . . . 14
5.3 Mounting . . . 15
5.4 Pipe lines . . . 15
5.5 Connecting the suction and discharge lines . . . 15

6. Electrical connections . . . 16
6.1 Connecting the motor . . . 16

7. Commissioning . . . 16
7.1 Checks before start-up . . . 16
7.2 Start-up . . . 16

8. Operation . . . 17
8.1 Description of the pump . . . 17
8.2 Switching on/off . . . 17
8.3 Adjustment of dosing flow using a frequency converter . . . 17

9. Maintenance . . . 18
9.1 General notes . . . 18
9.2 Cleaning and maintenance intervals . . . 18
9.3 Cleaning the suction and discharge valves . . . 19
9.4 Replacing the diaphragm . . . 20

10. Fault finding . . . 21
10.1 The dosing pump does not work . . . 21
10.2 The dosing pump does not suck in liquid . . . 21
10.3 No dosing flow . . . 21
10.4 The dosing flow of the pump is inaccurate . . . 21

11. Dosing curves . . . 22

12. Disposing of the product . . . 22

13. Document quality feedback . . . 22

1. General information

Read this document before you install the product. Installation and operation must comply with local regulations and accepted codes of good practice.

1.1 Hazard statements

The symbols and hazard statements below may appear in Grundfos installation and operating instructions, safety instructions and service instructions.

DANGER
Indicates a hazardous situation which, if not avoided, will result in death or serious personal injury.

WARNING
Indicates a hazardous situation which, if not avoided, could result in death or serious personal injury.

CAUTION
Indicates a hazardous situation which, if not avoided, could result in minor or moderate personal injury.

The hazard statements are structured in the following way:

SIGNAL WORD
Description of the hazard
Consequence of ignoring the warning

- Action to avoid the hazard.

1.2 Notes

The symbols and notes below may appear in Grundfos installation and operating instructions, safety instructions and service instructions.

Observe these instructions for explosion-proof products.

A blue or grey circle with a white graphical symbol indicates that an action must be taken.

A red or grey circle with a diagonal bar, possibly with a black graphical symbol, indicates that an action must not be taken or must be stopped.

If these instructions are not observed, it may result in malfunction or damage to the equipment.

Tips and advice that make the work easier.

1.3 Introduction

These installation and operating instructions contain all the information required for starting up and handling the DMX 227 dosing pump.

If you require further information or if any problems arise, which are not described in detail in this manual, please contact Grundfos.

1.4 Applications

WARNING
Toxic material
Death or serious personal injury
- Any usage other than that described here is not intended. Grundfos accepts no liability for any injuries or damage resulting from improper use.

The DMX 227 pump is suitable for liquid, non-abrasive and non-flammable media strictly in accordance with the instructions in this manual.

The DMX 227 dosing pumps have **not** been approved according to the EC directive 2014/34/EU, the so-called ATEX directive. The application of these pumps in potentially explosive environments according to ATEX directive is therefore not permitted.

1.5 Qualification and training of personnel

The personnel responsible for the operation, maintenance, inspection and installation must be appropriately qualified for these tasks. Areas of responsibility, levels of authority and the supervision of the personnel must be precisely defined by the operator.

If the personnel do not have the necessary knowledge, the necessary training and instruction must be given. If necessary, training can be performed by the manufacturer/supplier at the request of the operator of the pump. It is the responsibility of the operator to make sure that the contents of this manual are understood by the personnel.

2. Safety

This manual contains general instructions that must be observed during installation, operation and maintenance of the pump. This manual must therefore be read by the installation engineer and the relevant qualified personnel/operators prior to installation and start-up, and must be available at the installation location of the pump at all times.

It is not only the general safety instructions given in this "Safety" section that must be observed, but also all the specific safety instructions given in other sections.

2.1 Risks when safety instructions are not observed

Non-observance of the safety instructions may have dangerous consequences for the personnel, the environment and the pump. If the safety instructions are not observed, all rights to claims for damages may be lost.

Non-observance of the safety instructions may lead to the following hazards:

- failure of important functions of the pump/system
- failure of specified methods for maintenance
- harm to humans from exposure to electrical, mechanical and chemical influences
- damage to the environment from leakage of harmful substances.

2.2 Safety-conscious working

The safety instructions in this manual, applicable national health and safety regulations and any operator internal working, operating and safety regulations must be observed.

2.3 Safety instructions for the operator and user

WARNING
Electric shock
Death or serious personal injury
- Keep liquids away from the power supply and electrical components.

Before starting work on the pump, make sure the pump is disconnected from the power supply.

The system must be depressurised.

You must follow all safety regulations described here, as well as existing national regulations on health and environment protection, accident prevention, and any internal working, operating and safety regulations regarding the operator.

Hot or cold parts of the pump must be protected to prevent accidental contact.

Information attached to the pump must be observed.

Leakages of dangerous substances must be disposed of in a way that is not harmful to humans, animals or the environment.

Damage caused by electrical energy must be prevented. Observe the regulations of the local electricity supply company.

Only original accessories and original spare parts should be used.

2.4 Safety instructions for maintenance, inspection and installation work

The operator must ensure that all maintenance, inspection and installation work is carried out by authorised and qualified personnel, who have been adequately trained by reading this manual.

WARNING
Electric shock
Death or serious personal injury
- The pump housing must only be opened by personnel authorised by Grundfos.
- All electrical connections must be carried out by a qualified electrician in accordance with local regulations.

All work on the pump should only be carried out when the pump is stopped. The procedure described in this manual for stopping the pump must be observed.

Pumps or pump units which are used for media that are harmful to health must be decontaminated.

All safety and protective equipment must be immediately restarted or put into operation once work is complete.

Observe the points described in the initial start-up section prior to subsequent start-up.

Related information

7.1 Checks before start-up

7.2 Start-up

2.5 Unauthorised modification and manufacture of spare parts

Changes or modifications to the pump are only permitted after consultation with the manufacturer. Original spare parts and accessories should be used.

Grundfos accepts no liability for any damage resulting from incorrect use

2.6 Improper operating methods

The operational safety of the supplied pump is only ensured if it is used in accordance with section Technical data. The specified limit values must under no circumstances be exceeded.

Related information

3.1.1 Nameplate

3.1.2 Type key

2.7 Safety of the system in the event of a failure in the dosing system

DMX 227 dosing pumps are designed according to the latest technologies and are carefully manufactured and tested. However, a failure may occur in the dosing system. Systems in which dosing pumps are installed must be designed in such a way that the safety of the entire system is still ensured following a failure of the dosing pump. Provide the relevant monitoring and control functions for this.

3. Technical data

3.1 Identification

3.1.1 Nameplate

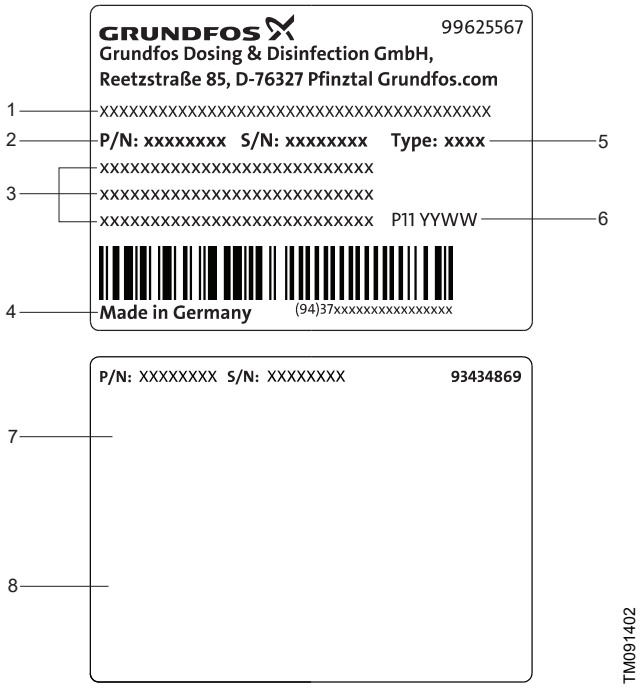

Pos.	Description
1	Type designation
2	Product number, Serial number
3	Pump performance by frequency
4	Country of origin
5	Pump model
6	Production code (year and week)
7	Marks of approval
8	ATEX designation

3.1.2 Type key

The type key is used to identify the precise pump and is not used for configuration purposes.

Type
DMX 1120-5D D-PVC/V/PVC-X-E 2 RR X E0 A G

Nominal dosing capacity [l/h]	
DMX **1120** -5D D-PVC/V/PVC-X-E 2 RR X E0 A G	

Max. pressure [bar]	
DMX 1120- **5D** D-PVC/V/PVC-X-E 2 RR X E0 A G	
5D	Pumps marked with a "D" after the pressure value are double-head pumps.

Control variant	
DMX 1120-5D **D** -PVC/V/PVC-X-E 2 RR X E0 A G	
D	Without manual control
S1	Stroke counter NAMUR, NC output

Dosing head variant	
DMX 1120-5D D- **PVC** /V/PVC-X-E 2 RR X E0 A G	
PP	Polypropylene
SS	Stainless steel 1.4571 (EN 10027-2), 316Ti (AISI)
PVC	Polyvinyl chloride

Gasket material	
DMX 1120-5D D-PVC/ **V** /PVC-X-E 2 RR X E0 A G	
E	EPDM
V	FKM
T	PTFE

Valve ball material	
DMX 1120-5D D-PVC/V/ **PVC** -X-E 2 RR X E0 A G	
SS	Stainless steel 1.4401 (EN 10027-2), 316 (AISI)
PP	Polypropylene
PVC	Polyvinyl chloride

Terminal box position (also VFD position)	
DMX 1120-5D D-PVC/V/PVC- **X** -E 2 RR X E0 A G	
X	Opposite side of dosing head (3 o'clock)

Supply voltage	
DMX 1120-5D D-PVC/V/PVC-X- **E** 2 RR X E0 A G	
E	3AC 230/400 V, 50 Hz, 460 V, 60 Hz (IE3, motors ≥ 0.75 kW)
F	Without motor, NEMA flange
0	Without motor, IEC flange
K	3AC 500 V, 50 Hz
M	3AC 400/690 V, 50 Hz (standard in power plants)

Valve type	
DMX 1120-5D D-PVC/V/PVC-X-E **2** RR X E0 A G	
2	Spring-loaded suction and discharge valve (0.05 bar)

Hydraulic connections (first = discharge, second = suction)	
DMX 1120-5D D-PVC/V/PVC-X-E 2 **RR** X E0 A G	
R	Flange DN 65, for pipes with external diameter 75 mm (PVC)
T	Flange DN 65, for pipes with external diameter 75 mm (PP)
U	Flange DN 65, for welding pipes with external diameter 75 mm (SS)
Z	Prepared for ANSI Flange 2 1/2" (PVC, PP, SS)

Power plug (only 1AC motors)	
DMX 1120-5D D-PVC/V/PVC-X-E 2 RR **X** E0 A G	
X	No plug

Motor variant and certification	
DMX 1120-5D D-PVC/V/PVC-X-E 2 RR X **E0** A G	
EM	Standard motor (without certificates)
E0	Motor with PTC for thermal protection (without certificates)
FA	VFD (variable frequency drive) (without certificates)
FB	VFD with I/O extension board (without certificates)
FC	VFD with internal Profibus (without certificates)
MP	Standard motor (with certificates)
K0	Motor with PTC for thermal protection (with certificates)

Pump housing material	
DMX 1120-5D D-PVC/V/PVC-X-E 2 RR X E0 **A** G	
A	Aluminium

Pump design	
DMX 1120-5D D-PVC/V/PVC-X-E 2 RR X E0 A **G**	
G	Grundfos
N	Neutral

3.2 Pump types

The pump nameplate shows various data of the pump like the type designation and the pump model. For an explanation of the nameplate see section Nameplate.

The pump type is the left part of the type designation and consists of the type abbreviation, the nominal dosing capacity and the maximum counterpressure. For an explanation of the type designation see section Type key.

Pump type	Dosing head size	Motor		Stroke volume [ml]
		Single pump [kW]	Double pump [kW]	
DMX 860-5	1	1.5	2.2	256
DMX 1120-5	1	1.5	2.2	256
DMX 1520-3	2	1.5	2.2	457
DMX 2000-3	2	1.5	2.2	457

Related information

3.1.1 Nameplate

3.1.2 Type key

3.3 Pump performance

3.3.1 Accuracy

- Dosing flow fluctuation: less than ± 2 % within the control range 1:10.

Applies to:

- water as dosing medium
- fully de-aerated dosing head
- standard pump version.

3.3.2 Performance

Applies to:

- maximum counterpressure
- water as dosing medium
- flooded suction 0.5 mWC
- fully de-aerated dosing head
- three-phase 400 V motor.

Pump type	p max. [1]		50 Hz		60 Hz			100 Hz [2]		
			Q	Max. stroke rate	Q		Max. stroke rate	Q		Max. stroke rate
Single pump	[bar]	[psi]	[l/h]	[n/min]	[l/h]	[gal/h]	[n/min]	[l/h]	[gal/h]	[n/min]
DMX 860-5	5	73	860	56	1032	273	67	1720	454	112
DMX 1120-5	5	73	1120	73	1344	355	88	2240	592	146
DMX 1520-3	3	44	1520	56	1824	482	67	3040	803	112
DMX 2000-3	3	44	2000	73	2400	634	88	4000	1057	146

1) Maximum counterpressure

2) Operation with frequency converter

Pump type	p max. [1]		50 Hz		60 Hz			100 Hz [2]		
			Q	Max. stroke rate	Q		Max. stroke rate	Q		Max. stroke rate
Double pump	[bar]	[psi]	[l/h]	[n/min]	[l/h]	[gal/h]	[n/min]	[l/h]	[gal/h]	[n/min]
DMX 860-5D	5	73	1720	56	2064	545	67	3440	909	112
DMX 1120-5D	5	73	2240	73	2688	710	88	4480	1184	146
DMX 1520-3D	3	44	3040	56	3648	964	67	6080	1606	112
DMX 2000-3D	3	44	4000	73	4800	1268	88	8000	2114	146

1) Maximum counterpressure

2) Operation with frequency converter

3.4 Suction heights

- Data in mWC.

Applies to:

- non-degassing and non-abrasive media
- Newtonian liquids
- temperature of 20 °C
- standard pump version.

3.4.1 Media with a viscosity similar to water

Maximum suction height: 3 mWC.

3.4.2 Suction heights for media with maximum permissible viscosity

Flooded suction: 1-3 mWC.

3.5 Ambient and operating conditions

CAUTION
Hot surface
Minor or moderate personal injury
- Pumps with AC motors may become hot. Allow a minimum space of 100 mm above the fan cover.

The installation site must be under cover.

Ensure that the enclosure class of motor and pump are not affected by the atmospheric conditions. Pumps with electronics are only suitable for indoor use.

Do not install the pump outdoors.

- Permissible ambient temperature: 0 °C to +40 °C.
- Permissible storage temperature: -20 °C to +50 °C.
- Permissible air humidity: max. relative humidity (non-condensing): 70 % at 40 °C, 90 % at 35 °C.
- Sound pressure level: 70 ± 5 dB(A), testing according to DIN 45635-01-KL3.
- Minimum counterpressure: 1 bar at the pump discharge valve. Pay attention to the pressure losses along the way to the injection point inclusively.
- Minimum pressure on the suction side: 1 bar.

3.6 Dosing medium

In case of questions regarding the material resistance and suitability of the pump for a specific dosing medium, contact Grundfos.

The dosing medium must have the following basic characteristics:

- liquid
- non-abrasive
- non-flammable.

3.6.1 Permissible media temperature

WARNING
Chemical hazard
Death or serious personal injury
- Observe the freezing and boiling points of the dosing medium.

Dosing head material	Temperature range p < 10 bar
PVC	0 °C to +40 °C
Stainless steel [3]	-10 °C to +70 °C
PP	0 °C to +40 °C

[3] For SIP/CIP applications, a temperature of 145 °C at a counterpressure of max. 2 bar is permitted for a short period (15 minutes).

3.6.2 Maximum permissible viscosity

Applies to:

- non-degassing and non-abrasive media
- Newtonian liquids
- temperature of 20 °C
- standard pump version.

Pump type	Viscosity [mPa s]	
	50 Hz	60 Hz
DMX 860-5	800	400
DMX 1120-5	400	200
DMX 1520-3	400	200
DMX 2000-3	200	100

3.7 Electrical data

3.7.1 Enclosure class

The enclosure class depends on the motor variant selected, see motor nameplate.

The specified enclosure class can only be ensured if the power supply cable is connected with the same degree of protection.

3.7.2 Motor

The motor design can be found on the nameplates of the motor and the pump.

3.8 Materials

Pump

- Pump housing: Al 226
- Diaphragm flanges: GG 25.

Optoelectronic diaphragm sensor

- Housing: ABS.

3.9 Weights

	Approx. weight [kg]
Single-head pumps	50
Double-head pumps	90

3.10 Dimensional sketches

3.10.1 Dimensions of DMX 227 single-head pumps

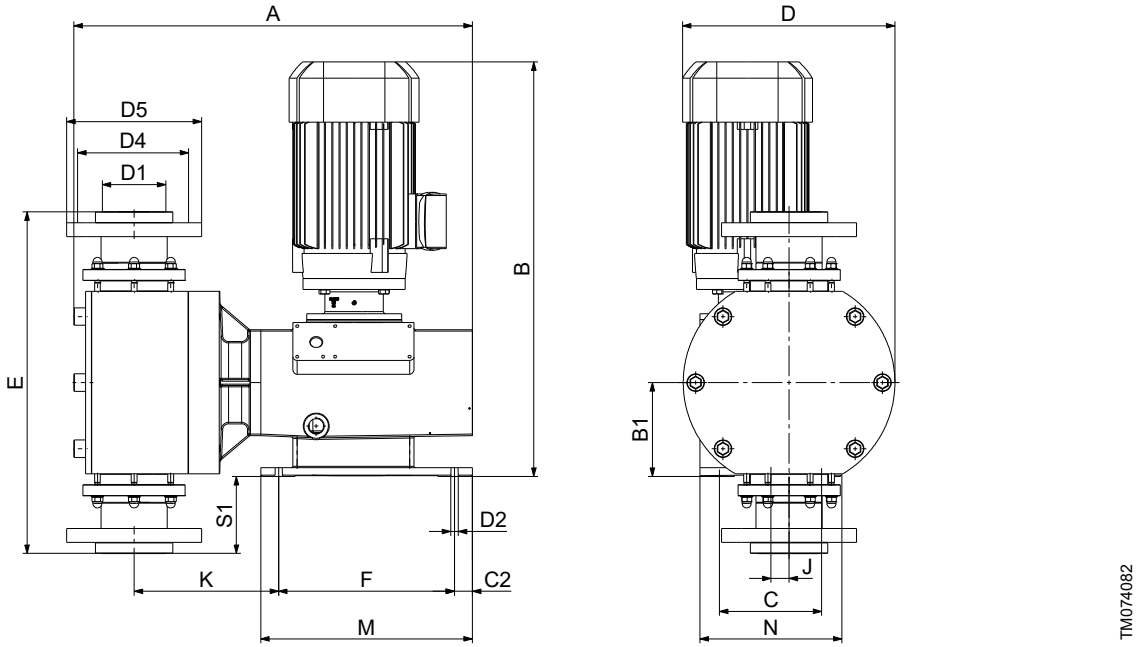

All dimensions are in mm, except for the thread designations.

Pump type	C	C2	D2	F	B1	M	N	J	D5
All	170	24.5	9.5	241	128.5	290	194.5	25	185

Pump type	Pump connection size D1	A	B	D	E	K	S1	D4
DMX 860-5	DN65	567	555	281	446	185	95	145
	ANSI 2 1/2	567	555	281	446	185	95	140
DMX 1120-5	DN65	567	555	281	446	185	95	145
	ANSI 2 1/2	567	555	281	446	185	95	140
DMX 1520-3	DN65	580	605	291	468	201	106	145
	ANSI 2 1/2	580	605	291	468	201	106	140
DMX 2000-3	DN65	580	605	291	468	201	106	145
	ANSI 2 1/2	580	605	291	468	201	106	140

3.10.2 Dimensions of DMX 227 double-head pumps

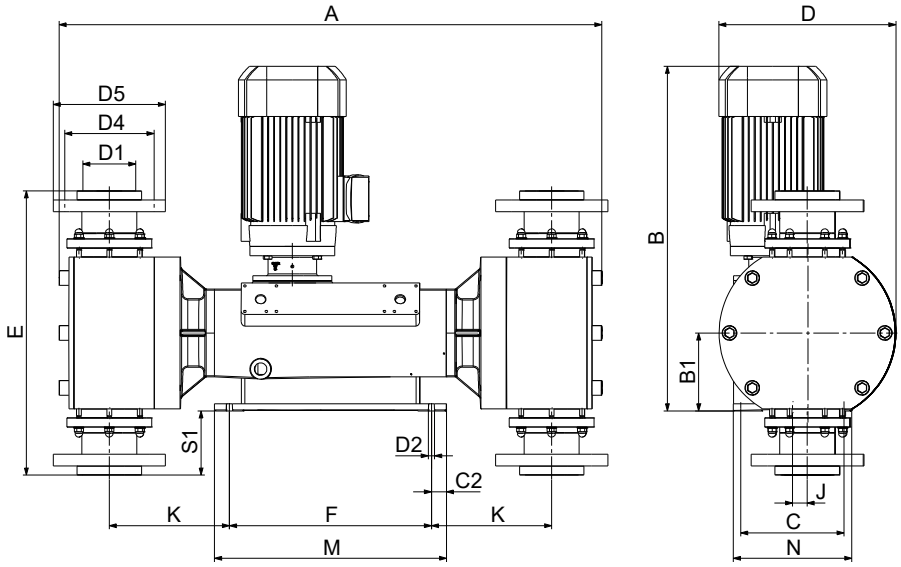

All dimensions are in mm, except for the thread designations.

Pump type	C	C2	D2	F	B1	M	N	J	D5
All	170	24.5	9.5	333	128.5	382	194.5	25	185

Pump type	Pump connection size D1	A	B	D	E	K	S1	D4
DMX 860-5D	DN65	880	555	281	446	185	95	145
	ANSI 2 1/2	880	555	281	446	185	95	140
DMX 1120-5D	DN65	880	555	281	446	185	95	145
	ANSI 2 1/2	880	555	281	446	185	95	140
DMX 1520-3D	DN65	910	605	291	468	201	106	145
	ANSI 2 1/2	910	605	291	468	201	106	140
DMX 2000-3D	DN65	910	605	291	468	201	106	145
	ANSI 2 1/2	910	605	291	468	201	106	140

4. Transport and storage

- Do not throw or drop the pump.
- Store the pump in a dry and cool place.
- Store the pump in upright position so that the gear grease cannot leak out.
- Do not use the protective packaging as transport packaging.
- Observe the permissible storage temperature.

4.1 Delivery

The DMX 227 dosing pumps are supplied in different packaging, depending on pump type and the overall delivery. For transport and intermediate storage, use the correct packaging to protect the pump against damage.

4.2 Intermediate storage

- Permissible storage temperature: -20 °C to +50 °C.
- Permissible air humidity: max. relative humidity: 92 % (non-condensing).

4.3 Unpacking

Retain the packaging for future storage or return, or dispose of the packaging in accordance with local regulations.

4.4 Return

WARNING
Toxic material
Death or serious personal injury

- Grundfos accepts no liability for damage caused by incorrect transportation or missing or unsuitable packaging of the pump.
- If the pump has been used for a medium which is dangerous to health or toxic, the pump will be classified as contaminated.

Return the pump in its original packaging or equivalent.

The pump must be thoroughly cleaned before it is returned or stored. It is essential that there are no traces of toxic or hazardous media remaining on the pump.

Before returning the pump to Grundfos for service, the safety declaration at the end of these instructions must be filled in by authorised personnel and attached to the pump in a visible position.

If Grundfos is requested to service the pump, it must be ensured that the pump is free from substances that can be injurious to health or toxic. If the pump has been used for such substances, the pump must be cleaned before it is returned.

If proper cleaning is not possible, all relevant information about the chemical must be provided.

If the above is not fulfilled, Grundfos can refuse to accept the pump for service. Possible costs of returning the pump are paid by the customer.

The safety declaration can be found at the end of these instructions.

5. Installation

5.1 Optimum installation

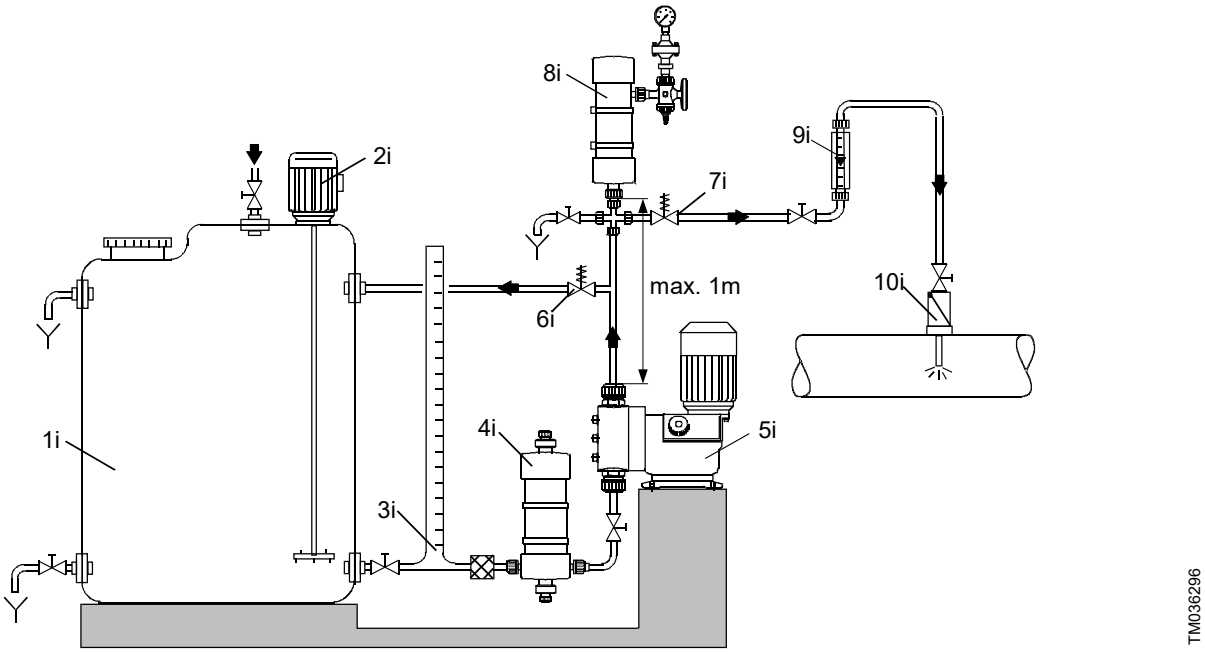

Example of optimum installation

Pos.	Components
1i	Dosing tank
2i	Electric agitator
3i	Extraction device
4i	Suction pulsation damper
5i	Dosing pump
6i	Relief valve
7i	Pressure loading valve
8i	Pulsation damper
9i	Measuring glass
10i	Injection unit

5.2 Installation tips

CAUTION
Hot surface
Minor or moderate personal injury
- Pumps with AC motors may become hot. Allow a minimum space of 100 mm above the fan cover.

- For easy de-aeration of the dosing head, install a ball valve (11i) with bypass line (back to the dosing tank) immediately after the discharge valve.
- In the case of long discharge lines, install a non-return valve (12i) in the discharge line.

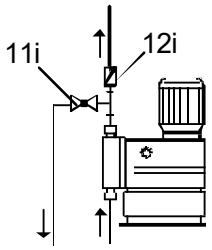

TM036297

Installation with ball valve and non-return valve

- When installing the suction line, observe the following:
  - Keep the suction line as short as possible. Prevent it from becoming tangled.
  - If necessary, use swept bends instead of elbows.
  - Always route the suction line up towards the suction valve.
  - Avoid loops which may cause air bubbles.

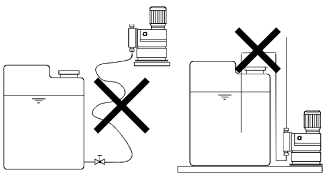

TM036298

Installation of suction line

- For non-degassing media with a viscosity similar to water, the pump can be mounted on the tank (observe the maximum suction height).
- Flooded suction preferred.
- For media with a tendency to sedimentation, install the suction line with filter (13i) so that the suction valve remains a few millimetres above the possible level of sedimentation.

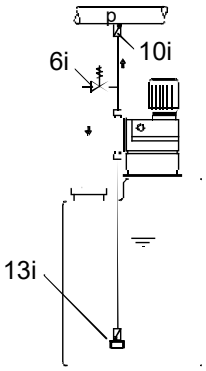

TM036299

Tank installation

- Note for suction-side installation: In dosing systems with a suction line longer than 1 metre, depending on the dosing flow, it may be necessary to install a properly sized pulsation damper (4i) immediately before the pump suction valve.

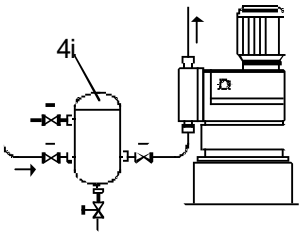

TM036300

Installation with suction-side pulsation damper

- Note for discharge-side installation: To protect the piping, use a pulsation damper (8i) for rigid piping longer than 3 metres and tubing longer than 5 metres.

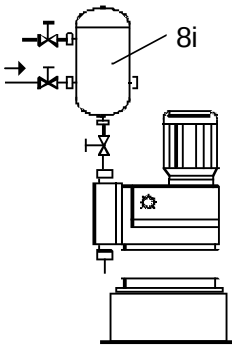

TM036301

Installation with discharge-side pulsation damper

- For degassing and viscous media: flooded suction.
- To protect the dosing pump and the discharge line against excessive pressure build-up, install a relief valve (6i) in the discharge line.

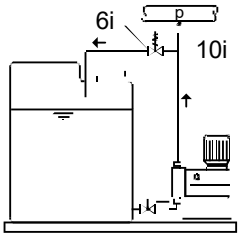

TM036302

Installation with relief valve

With open outflow of the dosing medium or a counterpressure below 1 bar

- Install a pressure-loading valve (7i) immediately before the outlet or the injection unit.

A positive pressure difference of at least 1 bar must be ensured between the counterpressure at the injection point and the pressure of the dosing medium at the pump suction valve.

- If this cannot be ensured, install a pressure-loading valve (7i) in the discharge line.

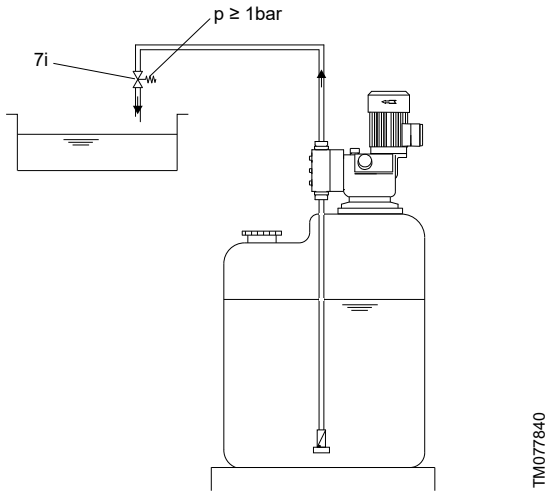

Installation with pressure-loading valve

- To avoid the siphon effect, install a pressure-loading valve (7i) in the discharge line and, if necessary, a solenoid valve (14i) in the suction line.

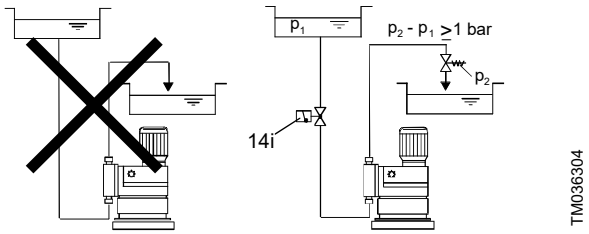

Installation to avoid the siphon effect

5.3 Mounting

- Mount the pump horizontally on the tank or on a console using four M8 screws.

5.4 Pipe lines

5.4.1 General

WARNING
Toxic material
Death or serious personal injury
- The resistance of the parts that come into contact with the media depends on the media, media temperature and operating pressure. Ensure that parts in contact with the media are chemically resistant to the dosing medium under operating conditions.
- Observe the safety data sheets and safety instructions of the chemical manufacturer when handling chemicals.

- To protect the dosing pump against excessive pressure build-up, install a relief valve in the discharge line.
- Only use the prescribed line types.
- All lines must be free from strain.
- Avoid loops and buckles in the hoses.
- Keep the suction line as short as possible to avoid cavitation.
- If necessary, use swept bends instead of elbows.
- Make sure the pump is suitable for the dosing medium.
- The flow must run in the opposite direction to gravity.

5.5 Connecting the suction and discharge lines

WARNING
Chemical hazard
Death or serious personal injury
- All lines must be free from strain.
- Only use the prescribed line types.

Pulsation dampers should be fitted on both the suction and discharge sides.

A positive pressure difference of 10 mWC is required for correct operation of the dosing pump. If the total of the counterpressure and the static difference in height between the suction valve and the dosing point is less than 10 mWC, a pressure-loading valve must be installed directly upstream of the dosing point.

To protect the dosing pump against excessive pressure build-up, install a relief valve in the discharge line.

Make sure that the valves are seated correctly. See image below for the position of the valve disk (C).

Depending on the material of the connection flanges (counter flanges):

- Pipe and flange made of stainless steel: Weld the pipe to the weld neck flange.
- Pipe and flange made of PP: Weld the pipe to the flange sleeve.
- Pipe and flange made of PVC: Adhere the pipe to the flange sleeve.
- The internal diameter of the lines, adapters and connectors should not be smaller than DN 65. If necessary, use bends instead of elbows.
- The suction lines must be designed in such a way that cavitation is avoided.
- Connect the suction line to the suction valve (A).
  - Install the suction line in the tank so that the foot valve remains 5 to 10 mm above the bottom of the tank or the possible level of sedimentation.
- Connect the discharge line to the discharge valve (B).

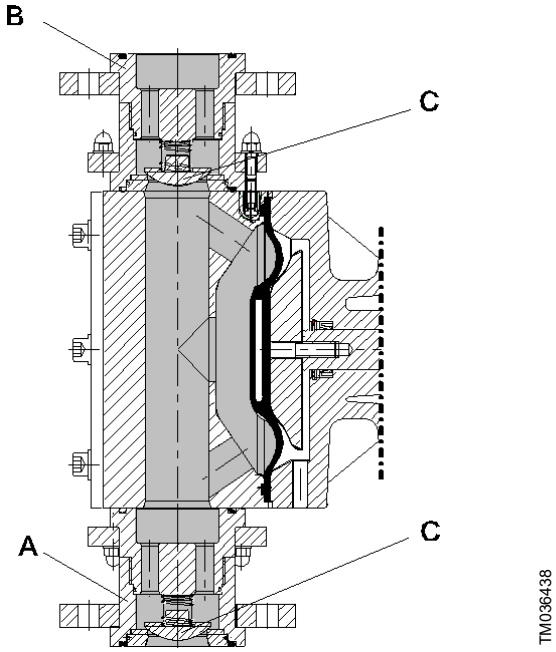

Connecting the suction and discharge lines

Pos.	Components
A	Suction valve
B	Discharge valve
C	Valve disk

6. Electrical connections

Make sure that the pump is suitable for the electricity supply on which it will be used.

WARNING
Electric shock
Death or serious personal injury

- All electrical connections must be carried out by a qualified electrician in accordance with local regulations.
- Disconnect the pump from the power supply before connecting the power supply cable and the relay contacts.
- Do not switch on the power supply until the pump is going to be started.
- The pump housing must only be opened by persons authorised by Grundfos.
- The power supply must be electrically isolated from the signal inputs and outputs.
- Observe the local safety regulations.

Protect the cable connections and plugs against corrosion and humidity.

Only remove the protective caps from the sockets that are being used.

The pump is switched off by switching off the power supply.

6.1 Connecting the motor

Observe the direction of rotation.

A motor protector, adjusted to the rated motor current, must be provided by the customer.

- Connect the motor according to the wiring diagram in the terminal box.
- When the pump is used with a frequency converter, the jumpers in the terminal box have to be set according to the converter voltage.
- The jumpers of three-phase motors are factory-set for star connection.

7. Commissioning

7.1 Checks before start-up

- Check that the rated voltage stated on the pump nameplate corresponds to the local conditions!
- Check that all connections are secure and tighten, if necessary.
- Check that the dosing head screws are tightened with the specified torque and tighten, if necessary.
- Check that all electrical connections are correct.

7.2 Start-up

After initial start-up and after each time the diaphragm is changed, tighten the dosing head screws.

After approximately 6-10 operating hours or two days, cross-tighten the dosing head screws using a torque wrench.

Maximum torque: 70-80 Nm.

7.2.1 Filling with gear oil

The pump has been tested in the factory, and the oil has been drained prior to shipping. Before starting, fill the pump with the supplied special oil as follows:

1. Make sure that the pump is switched off.
2. Slacken and remove the oil-filling screw with oil dipstick.
3. Slowly add the gear oil through the oil-filling opening until the oil reaches the mark on the oil dipstick.
   - Gear oil for single pumps: 5.0 litres.
   - Gear oil for double pumps: 7.5 litres.
4. Switch on the pump.
5. Switch off the pump after approx. 10 minutes, check the oil level, and add oil, if necessary.
6. Refit the oil-filling screw with dipstick.

7.2.2 Starting the pump

1. Switch on the power supply.
2. Pumps with frequency converter: Set the dosing rate to 100 %. See installation and operating instructions for the frequency converter and section Adjustment of dosing flow using a frequency converter.

The pump is now ready for operation.

Related information

8.3 Adjustment of dosing flow using a frequency converter

8. Operation

In the event of a diaphragm leakage, the dosing liquid may leak out of the hole in the intermediate flange between the pump and the dosing head. The parts inside the housing are protected from the dosing liquid for a short time (depending on the type of liquid) by the housing sealing. It is necessary to check regularly (daily) if liquid is leaking out of the intermediate flange.

8.1 Description of the pump

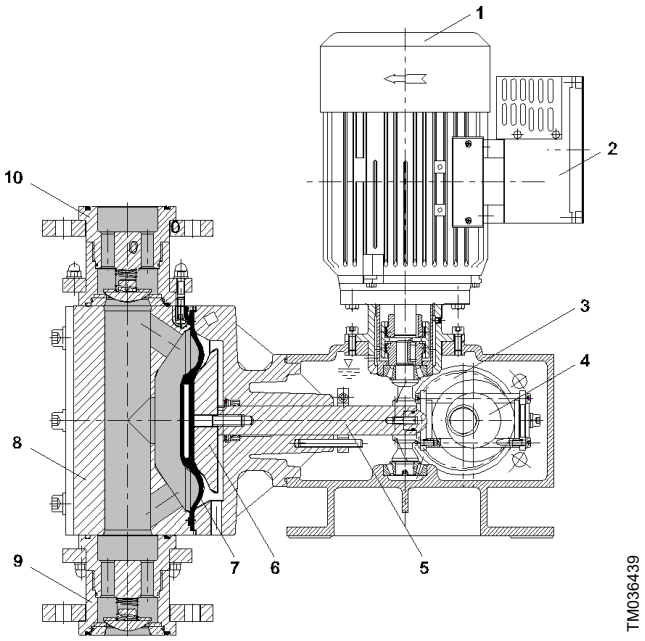

DMX 227

Pos.	Components
1	Motor
2	Frequency converter
3	Worm wheel
4	Eccentric
5	Tappet
6	Support disk
7	Dosing diaphragm
8	Dosing head
9	Suction valve
10	Pressure valve

Functional principle

- Oscillating positive displacement pump with electric drive, mechanical diaphragm deflection, and constant stroke length.
- Following reduction of the motor speed by a worm gear, the rotation of the drive is converted into the suction and compression movement of the diaphragm by means of an eccentric and tappet. A defined volume (stroke volume) of the dosed medium is thus sucked into the dosing head via the suction valve, and displaced into the dosing line by the discharge valve.
- The dosing flow can be adjusted in the range 1:10 if a frequency converter is installed.

8.2 Switching on/off

Before switching on the pump, check that it is installed correctly. Observe sections about installation and commissioning.

- To start the pump, switch on the power supply.
- To stop the pump, switch off the power supply.

Related information

5.1 Optimum installation
7.1 Checks before start-up

8.3 Adjustment of dosing flow using a frequency converter

WARNING
Electric shock
Death or serious personal injury
- Observe the manufacturer's instructions. All connections must be carried out to these instructions.

The dosing rate can only be adjusted in the range 1:10 if a frequency converter is installed. See installation and operating instructions for the frequency converter.

Settings of frequency converter when used with Grundfos dosing pumps

Pay special attention to the following parameters of the frequency converter:

- P013 (maximum motor frequency):
  - Set the frequency converter to maximum 100 Hz.
  - Due to this setting, the maximum stroke frequency of the pump cannot be exceeded.
- P086 (motor current limit):
  - Do not change the default setting (150 %).
  - The motor is protected by a PTC resistor. Therefore, this parameter is not necessary.
- P081 - P085 (motor data):
  - Set these parameters to the values stated on the motor nameplate.
  - Observe the manufacturer's instructions!

9. Maintenance

9.1 General notes

WARNING
Chemical hazard
Death or serious personal injury

- Observe the safety data sheets and safety instructions of the chemical manufacturer when handling chemicals.
- Wear personal protective equipment when working with chemicals.
- Collect and dispose of all chemicals in a way that is not harmful to humans, animals or the environment.

WARNING
Electric shock
Death or serious personal injury

- The pump housing must only be opened by personnel authorised by Grundfos.
- All repairs on the pump must be carried out by authorised and qualified personnel.
- Make sure the pump is disconnected from the power supply before starting any maintenance work or repairs.

9.2 Cleaning and maintenance intervals

In the event of a diaphragm leakage, the dosing liquid may leak out of the hole in the intermediate flange between the pump and the dosing head. The parts inside the housing are protected from the dosing liquid for a short time (depending on the type of liquid) by the housing sealing. It is necessary to check regularly (daily) if liquid is leaking out of the intermediate flange.

9.2.1 Changing the gear oil

The gear grease must only be changed by authorised and qualified personnel. For this purpose, send the pump to Grundfos or an authorised service workshop.

Use exclusively original gear oil.

When changing the gear oil, check the dosing diaphragm and, for safety reasons, replace, if necessary.

To ensure trouble-free operation, it is recommended to regularly change the gear oil.

9.2.2 Cleaning the diaphragm and valves

Clean the diaphragm and valves, and replace, if necessary (with stainless-steel valves: inner valve parts):

- At least every 12 months or after 3,000 operating hours.
- In the event of a fault.

9.3 Cleaning the suction and discharge valves

CAUTION
Toxic material
Minor or moderate personal injury
- Rinse the dosing head with water, if your dosing medium is compatible with water.

The O-rings must be correctly placed in the specified groove.

If the pump loses capacity, clean the suction and discharge valves as follows:
See figure below.

1. Loosen the cap nuts (8) on the supporting ring (1).
2. Remove the valve housing (2/9) and other parts of the valve.
3. Remove the other internal parts, and clean or replace, if necessary.
4. Re-assemble the valve according to the exploded view below.
5. Refit the valve.

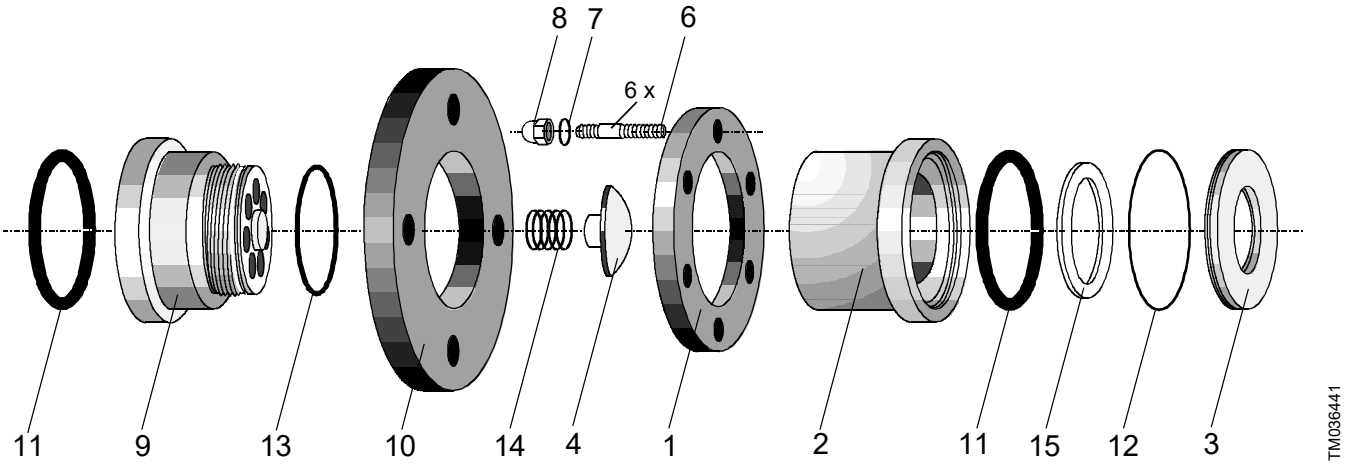

Exploded view of the valves

Pos.	Components
1	Supporting ring
2	Valve housing
3	Valve seat
4	Valve disk
6	Double-end stud
7	Washer
8	Cap nut
9	Valve housing
10	Flange
11	O-ring
12	O-ring
13	O-ring
14	Spring
15	Valve disk

9.4 Replacing the diaphragm

CAUTION
Toxic material
Minor or moderate personal injury
- Rinse the dosing head with water, if your dosing medium is compatible with water.

9.4.1 Switching off the pump

1. Switch off the pump and disconnect it from the power supply.
2. Depressurise the system.
3. Take suitable steps to ensure that the returning dosing medium is safely collected.

9.4.2 Replacing the diaphragm

CAUTION
Toxic material
Minor or moderate personal injury
- Rinse the dosing head with water, if your dosing medium is compatible with water.

After initial start-up and after each time the diaphragm is changed, tighten the dosing head screws.
ross-tighten the dosing head screws using a torque wrench after approximately 6-10 operating hours or two days. Maximum torque: 70-80 Nm.

1. Loosen the six dosing head screws.
2. Remove the dosing head.
3. Unscrew the diaphragm by manually turning it counter-clockwise.
4. Refit the retaining ring (4), shim ring (5), lip seal (7) and supporting ring (6). Replace faulty parts.
5. Screw in the new diaphragm completely.
6. Remove the motor fan cover, and turn the fan blades until the diaphragm reaches the bottom dead centre.
7. Refit the dosing head carefully, and cross-tighten the screws. Maximum torque: 70-80 Nm.
8. De-aerate and start the dosing pump.

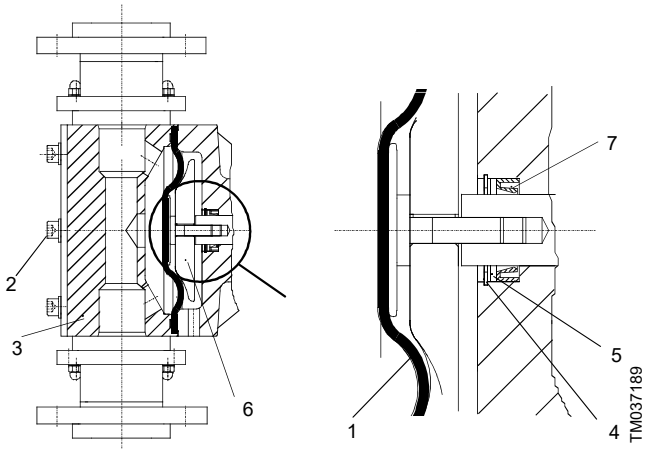

Replacing the diaphragm

Pos.	Components
1	Diaphragm
2	Dosing head screws
3	Dosing head
4	Retaining ring
5	Shim ring
6	Supporting ring
7	Lip seal

Grundfos gear oil

Order no	Description
98683958	5.0 l DHG 68
98683959	7.5 l DHG 68

Alternative special oil for DHG 68

Manufacturer	Designation
ARAL	Degol BMB 68
BP	BP-Energol GR-XP 68
Chevron	Chevron NL gear compound 68
ESSO	Spartan BP 68
Fina	Fina Giran 68
Mobil Oil	Mobilgear 626
Texaco	Texaco Meropa 68
Shell	Tellus 68
elf	reductelf SP 68

10. Fault finding

10.1 The dosing pump does not work

Cause	Remedy
The pump is not connected to the power supply.	• Connect the power supply cable.
Incorrect supply voltage.	• Replace the dosing pump.
Electrical failure in the motor or the pump control unit.	• Return the pump for repair.
The level sensor in the supply tank has stopped the pump, because the tank is empty.	• Refill the tank and start the pump.

10.2 The dosing pump does not suck in liquid

Cause	Remedy
The suction line is leaking.	• Check and seal or replace the suction line.
The suction line is too small or too long.	• Check with Grundfos specifications and adapt the suction line to the specifications.
The suction line is clogged.	• Clean or replace the suction line. • Clean the tank from the sediment or shorten the suction line.
The foot valve is covered by sediment.	• Hang the suction line at a higher position.
The suction line is buckled.	• Install the suction line correctly. Check for damage.
There are crystalline deposits in the valves.	• Clean the valves.
The dosing diaphragm is broken.	• Replace the dosing diaphragm.

10.3 No dosing flow

Cause	Remedy
There is air in the suction line and the dosing head.	• Wait until the pump has de-aerated.
The viscosity of the dosing medium is too high.	• Make sure the dosing pump and the installation are suitable for the viscosity of the dosing medium.
There are crystalline deposits in the valves.	• Clean the valves.
The valves are not assembled correctly.	• Assemble the valve parts in the right order. Ensure correct flow direction.
The injection point is blocked.	• Ensure correct flow direction (injection unit). Remove the obstruction.
The lines and peripheral equipment are installed incorrectly.	• Install the lines and peripheral equipment correctly. Ensure free passage.

10.4 The dosing flow of the pump is inaccurate.

Cause	Remedy
Dosing head not fully de-aerated.	• Repeat the de-areation.
The dosing medium is degassing.	• Check the installation.
The valves are dirty.	• Clean the valves.
Counterpressure fluctuations.	• Install a pressure-loading valve and a pulsation damper.
Suction height fluctuations.	• Keep the suction level constant.
There is a siphoning effect (the inlet pressure is higher than counterpressure).	• Install a pressure-loading valve.
The suction line or discharge line is leaking.	• Replace the suction line or discharge line.
Parts in contact with the medium are not resistant to it.	• Replace with resistant materials.
The dosing diaphragm is worn.	• Replace the diaphragm. Observe the maintenance instructions.
There are fluctuations in the supply voltage.	• Decrease the counterpressure of the pump.
There is variation in the density or the viscosity of the dosing medium.	• Check the concentration. Use an agitator, if necessary.

11. Dosing curves

The dosing curves in the appendix are trend curves.

They apply to:

- performance of single pump (the flow rate is doubled for the double pump)
- water as the dosing medium
- zero point of pump Q_0 at a counterpressure of 3 bar
- standard pump version.

Abbreviation	Description
Q	Dosing flow
f	Drive frequency

Related information

A.1. Dosing curves

12. Disposing of the product

This product or parts of it must be disposed of in an environmentally sound way.

1. Use the public or private waste collection service.
2. If this is not possible, contact the nearest Grundfos company or service workshop.

The crossed-out wheelie bin symbol on a product means that it must be disposed of separately from household waste. When a product marked with this symbol reaches its end of life, take it to a collection point designated by the local waste disposal authorities. The separate collection and recycling of such products will help protect the environment and human health.

See also end-of-life information at *www.grundfos.com/product-recycling*.

13. Document quality feedback

To provide feedback about this document, use your smart device to scan the QR code.

FEEDBACK99559294

Click here to submit your feedback

A.1. Dosing curves

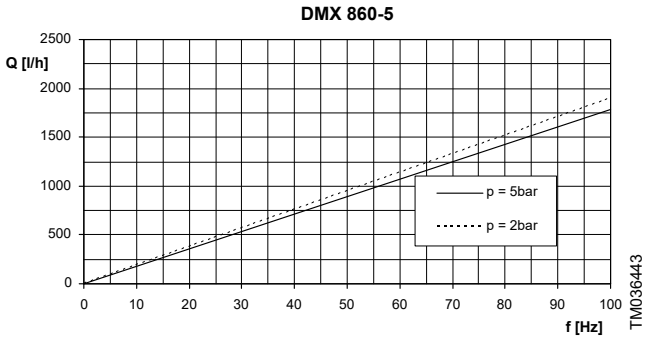

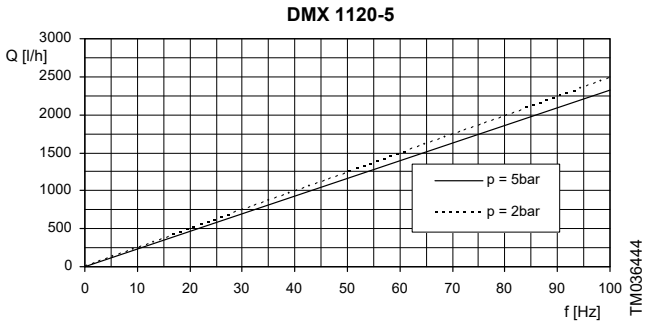

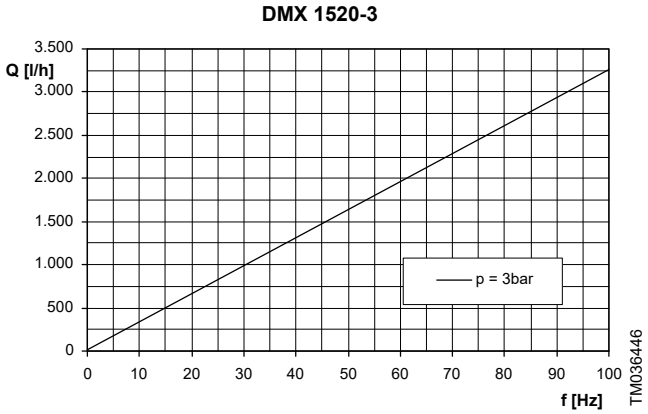

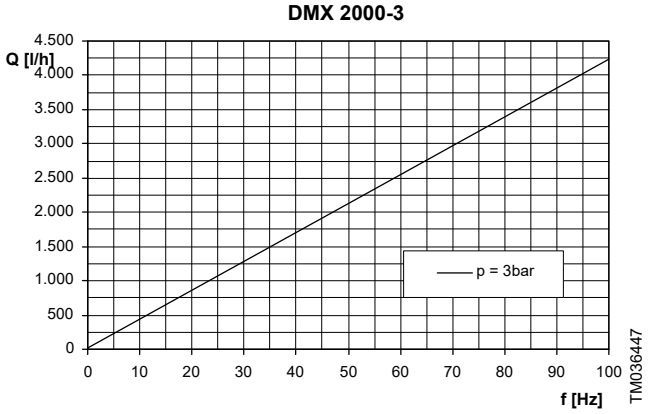

B.1. Safety declaration

- Please copy, fill in and sign this sheet and attach it to the product returned for service.
- Fill in this document using English or German language.

Fault description

- Please make a circle around the damaged part.
- In the case of an electrical or functional fault, please mark the cabinet.
- Please give a short description of the fault and indicate if the diaphragm is damaged:

TM074683

Declaration

We hereby declare that this product is free from hazardous chemicals, biological and radioactive substances:

Type designation (see nameplate):
Product number:

The product was used with the following dosing medium:

No dosing medium or water:
A chemical solution, name:

Date and signature:

Company stamp:

Argentina
Bombas GRUNDFOS de Argentina S.A.
Ruta Panamericana km. 37.500industin
1619 - Garín Pcia. de B.A.
Tel.: +54-3327 414 444
Fax: +54-3327 45 3190

Australia
GRUNDFOS Pumps Pty. Ltd.
P.O. Box 2040
Regency Park
South Australia 5942
Tel.: +61-8-8461-4611
Fax: +61-8-8340-0155

Austria
GRUNDFOS Pumpen Vertrieb Ges.m.b.H.
Grundfosstraße 2
A-5082 Grödig/Salzburg
Tel.: +43-6246-883-0
Fax: +43-6246-883-30

Belgium
N.V. GRUNDFOS Bellux S.A.
Boomsesteenweg 81-83
B-2630 Aartselaar
Tel.: +32-3-870 7300
Fax: +32-3-870 7301

Bosnia and Herzegovina
GRUNDFOS Sarajevo
Zmaja od Bosne 7-7A
BiH-71000 Sarajevo
Tel.: +387 33 592 480
Fax: +387 33 590 465
www.ba.grundfos.com
E-mail: grundfos@bih.net.ba

Brazil
BOMBAS GRUNDFOS DO BRASIL
Av. Humberto de Alencar Castelo Branco, 630
CEP 09850 - 300
São Bernardo do Campo - SP
Tel.: +55-11 4393 5533
Fax: +55-11 4343 5015

Bulgaria
Grundfos Bulgaria EOOD
Slatina District
Iztochna Tangenta street no. 100
BG - 1592 Sofia
Tel.: +359 2 49 22 200
Fax: +359 2 49 22 201
E-mail: bulgaria@grundfos.bg

Canada
GRUNDFOS Canada inc.
2941 Brighton Road
Oakville, Ontario
L6H 6C9
Tel.: +1-905 829 9533
Fax: +1-905 829 9512

China
GRUNDFOS Pumps (Shanghai) Co. Ltd.
10F The Hub, No. 33 Suhong Road
Minhang District
Shanghai 201106 PRC
Tel.: +86 21 612 252 22
Fax: +86 21 612 253 33

Colombia
GRUNDFOS Colombia S.A.S.
Km 1.5 vía Siberia-Cota Conj. Potrero Chico,
Parque Empresarial Arcos de Cota Bod. 1A.
Cota, Cundinamarca
Tel.: +57(1)-2913444
Fax: +57(1)-8764586

Croatia
GRUNDFOS CROATIA d.o.o.
Buzinski prilaz 38, Buzin
HR-10010 Zagreb
Tel.: +385 1 6595 400
Fax: +385 1 6595 499
www.hr.grundfos.com

Czech Republic
GRUNDFOS Sales Czechia and Slovakia s.r.o.
Čajkovského 21
779 00 Olomouc
Tel.: +420-585-716 111

Denmark
GRUNDFOS DK A/S
Martin Bachs Vej 3
DK-8850 Bjerringbro
Tel.: +45-87 50 50 50
Fax: +45-87 50 51 51
E-mail: info_GDK@grundfos.com
www.grundfos.com/DK

Estonia
GRUNDFOS Pumps Eesti OÜ
Peterburi tee 92G
11415 Tallinn
Tel.: + 372 606 1690
Fax: + 372 606 1691

Finland
OY GRUNDFOS Pumput AB
Trukkikuja 1
FI-01360 Vantaa
Tel.: +358-(0) 207 889 500

France
Pompes GRUNDFOS Distribution S.A.
Parc d'Activités de Chesnes
57, rue de Malacombe
F-38290 St. Quentin Fallavier (Lyon)
Tel.: +33-4 74 82 15 15
Fax: +33-4 74 94 10 51

Germany
GRUNDFOS GMBH
Schlüterstr. 33
40699 Erkrath
Tel.: +49-(0) 211 929 69-0
Fax: +49-(0) 211 929 69-3799
E-mail: infoservice@grundfos.de
Service in Deutschland:
kundendienst@grundfos.de

Greece
GRUNDFOS Hellas A.E.B.E.
20th km. Athinon-Markopoulou Av.
P.O. Box 71
GR-19002 Peania
Tel.: +0030-210-66 83 400
Fax: +0030-210-66 46 273

Hong Kong
GRUNDFOS Pumps (Hong Kong) Ltd.
Unit 1, Ground floor, Siu Wai industrial Centre
29-33 Wing Hong Street & 68 King Lam Street, Cheung Sha Wan
Kowloon
Tel.: +852-27861706 / 27861741
Fax: +852-27858664

Hungary
GRUNDFOS South East Europe Kft.
Tópark u. 8
H-2045 Törökbálint
Tel.: +36-23 511 110
Fax: +36-23 511 111

India
GRUNDFOS Pumps India Private Limited
118 Old Mahabalipuram Road
Thoraipakkam
Chennai 600 097
Tel.: +91-44 2496 6800

Indonesia
PT GRUNDFOS Pompa
Graha intirub Lt. 2 & 3
Jln. Cililitan Besar No.454. Makasar, Jakarta Timur
ID-Jakarta 13650
Tel.: +62 21-469-51900
Fax: +62 21-460 6910 / 460 6901

Ireland
GRUNDFOS (Ireland) Ltd.
Unit A, Merrywell Business Park
Ballymount Road Lower
Dublin 12
Tel.: +353-1-4089 800
Fax: +353-1-4089 830

Italy
GRUNDFOS Pompe Italia S.r.l.
Via Gran Sasso 4
I-20060 Truccazzano (Milano)
Tel.: +39-02-95838112
Fax: +39-02-95309290 / 95838461

Japan
GRUNDFOS Pumps K.K.
1-2-3, Shin-Miyakoda, Kita-ku
Hamamatsu
431-2103 Japan
Tel.: +81 53 428 4760
Fax: +81 53 428 5005

Kazakhstan
Grundfos Kazakhstan LLP
7' Kyz-Zhibek Str., Kok-Tobe micr.
KZ-050020 Almaty Kazakhstan
Tel.: +7 (727) 227-98-55/56

Korea
GRUNDFOS Pumps Korea Ltd.
6th Floor, Aju Building 679-5
Yeoksam-dong, Kangnam-ku, 135-916
Seoul, Korea
Tel.: +82-2-5317 600
Fax: +82-2-5633 725

Latvia
SIA GRUNDFOS Pumps Latvia
Deglava biznesa centrs
Augusta Deglava ielā 60
LV-1035, Rīga,
Tel.: + 371 714 9640, 7 149 641
Fax: + 371 914 9646

Lithuania
GRUNDFOS Pumps UAB
Smolensko g. 6
LT-03201 Vilnius
Tel.: + 370 52 395 430
Fax: + 370 52 395 431

Malaysia
GRUNDFOS Pumps Sdn. Bhd.
7 Jalan Peguam U1/25
Glenmarie industrial Park
40150 Shah Alam, Selangor
Tel.: +60-3-5569 2922
Fax: +60-3-5569 2866

Mexico
Bombas GRUNDFOS de México S.A. de C.V.
Boulevard TLC No. 15
Parque industrial Stiva Aeropuerto
Apodaca, N.L. 66600
Tel.: +52-81-8144 4000
Fax: +52-81-8144 4010

Netherlands
GRUNDFOS Netherlands
Veluwezoom 35
1326 AE Almere
Postbus 22015
1302 CA ALMERE
Tel.: +31-88-478 6336
Fax: +31-88-478 6332
E-mail: info_gnl@grundfos.com

New Zealand
GRUNDFOS Pumps NZ Ltd.
17 Beatrice Tinsley Crescent
North Harbour Industrial Estate
Albany, Auckland
Tel.: +64-9-415 3240
Fax: +64-9-415 3250

Norway
GRUNDFOS Pumper A/S
Strømsveien 344
Postboks 235, Leirdal
N-1011 Oslo
Tel.: +47-22 90 47 00
Fax: +47-22 32 21 50

Poland
GRUNDFOS Pompy Sp. z o.o.
ul. Klonowa 23
Baranowo k. Poznania
PL-62-081 Przeźmierowo
Tel.: (+48-61) 650 13 00
Fax: (+48-61) 650 13 50

Portugal
Bombas GRUNDFOS Portugal, S.A.
Rua Calvet de Magalhães, 241
Apartado 1079
P-2770-153 Paço de Arcos
Tel.: +351-21-440 76 00
Fax: +351-21-440 76 90

Romania
GRUNDFOS Pompe România SRL
S-PARK BUSINESS CENTER, Clădirea A2, etaj 2
Str. Tipografilor, Nr. 11-15, Sector 1, Cod 013714
Bucuresti, Romania
Tel.: 004 021 2004 100
E-mail: romania@grundfos.ro

Serbia
Grundfos Srbija d.o.o.
Omladinskih brigada 90b
11070 Novi Beograd
Tel.: +381 11 2258 740
Fax: +381 11 2281 769
www.rs.grundfos.com

Singapore
GRUNDFOS (Singapore) Pte. Ltd.
25 Jalan Tukang
Singapore 619264
Tel.: +65-6681 9688
Faxax: +65-6681 9689

Slovakia
GRUNDFOS s.r.o.
Prievozská 4D 821 09 BRATISLAVA
Tel.: +421 2 5020 1426
sk.grundfos.com

Slovenia
GRUNDFOS LJUBLJANA, d.o.o.
Leskoškova 9e, 1122 Ljubljana
Tel.: +386 (0) 1 568 06 10
Fax: +386 (0)1 568 06 19
E-mail: tehnika-si@grundfos.com

South Africa
GRUNDFOS (PTY) LTD
16 Lascelles Drive, Meadowbrook Estate
1609 Germiston, Johannesburg
Tel.: (+27) 10 248 6000
Fax: (+27) 10 248 6002
E-mail: lgradidge@grundfos.com

Spain
Bombas GRUNDFOS España S.A.
Camino de la Fuentecilla, s/n
E-28110 Algete (Madrid)
Tel.: +34-91-848 8800
Fax: +34-91-628 0465

Sweden
GRUNDFOS AB
Box 333 (Lunnagårdsgatan 6)
431 24 Mölndal
Tel.: +46 31 332 23 000
Fax: +46 31 331 94 60

Switzerland
GRUNDFOS Pumpen AG
Bruggacherstrasse 10
CH-8117 Fällanden/ZH
Tel.: +41-44-806 8111
Fax: +41-44-806 8115

Taiwan
GRUNDFOS Pumps (Taiwan) Ltd.
7 Floor, 219 Min-Chuan Road
Taichung, Taiwan, R.O.C.
Tel.: +886-4-2305 0868
Fax: +886-4-2305 0878

Thailand
GRUNDFOS (Thailand) Ltd.
92 Chaloem Phrakiat Rama 9 Road
Dokmai, Pravej, Bangkok 10250
Tel.: +66-2-725 8999
Fax: +66-2-725 8998

Turkey
GRUNDFOS POMPA San. ve Tic. Ltd. Sti.
Gebze Organize Sanayi Bölgesi
Ihsan dede Caddesi
2. yol 200. Sokak No. 204
41490 Gebze/ Kocaeli
Tel.: +90 - 262-679 7979
Fax: +90 - 262-679 7905
E-mail: satis@grundfos.com

Ukraine
ТОВ "ГРУНДФОС УКРАЇНА"
Бізнес Центр Європа
Столичне шосе, 103
м. Київ, 03131, Україна
Tel.: (+38 044) 237 04 00
Fax: (+38 044) 237 04 01
E-mail: ukraine@grundfos.com

United Arab Emirates
GRUNDFOS Gulf Distribution
P.O. Box 16768
Jebel Ali Free Zone, Dubai
Tel.: +971 4 8815 166
Fax: +971 4 8815 136

United Kingdom
GRUNDFOS Pumps Ltd.
Grovebury Road
Leighton Buzzard/Beds. LU7 4TL
Tel.: +44-1525-850000
Fax: +44-1525-850011

U.S.A.
Global Headquarters for WU
856 Koomey Road
Brookshire, Texas 77423 USA
Phone: +1-630-236-5500

Uzbekistan
Grundfos Tashkent, Uzbekistan
The Representative Office of Grundfos Kazakhstan in Uzbekistan
38a, Oybek street, Tashkent
Tel.: (+998) 71 150 3290 / 71 150 3291
Fax: (+998) 71 150 3292

© 2025 Grundfos Holding A/S, all rights reserved.

Trademarks displayed in this material, including but not limited to Grundfos and the Grundfos logo, are registered trademarks owned by The Grundfos Group.

99559294 **11.2025**

ECM: 1436921