DMH 28X

Dosing pump

Installation and operating instructions

DMH 28x
Installation and operating instructions
(all available languages)
http://net.grundfos.com/qr/i/99558950

GRUNDFOS

DMH 28X

English (GB)

Installation and operating instructions 4
Dosing curves 38
Safety declaration 47
China RoHS 48

Original installation and operating instructions

Table of contents

1. General information . . . 4
1.1 Hazard statements . . . 4
1.2 Notes . . . 4
1.3 Target group . . . 5
1.4 Safety instructions for the operator and user . . . 5
1.5 Safety of the system in the event of a failure in the dosing pump . . . 5
1.6 Dosing chemicals . . . 5

2. Handling and storing the product . . . 6
2.1 Storage . . . 6
2.2 Unpacking . . . 6
2.3 Transport . . . 6

3. Product introduction . . . 7
3.1 Product description . . . 7
3.2 Intended use . . . 10
3.3 Improper operating methods . . . 10
3.4 Type key . . . 11
3.5 Nameplate . . . 12

4. Technical data . . . 13
4.1 Pump performance . . . 13
4.2 Maximum inlet pressure . . . 14
4.3 Suction lift . . . 14
4.4 Sound pressure level . . . 14
4.5 Motor . . . 14
4.6 Enclosure class . . . 14
4.7 AR control unit . . . 15
4.8 Power supply . . . 15
4.9 Ambient and operating conditions . . . 15
4.10 Dimensions . . . 16
4.11 Weight . . . 17
4.12 Stroke volume . . . 17
4.13 Characteristics of the dosing medium . . . 17
4.14 Materials . . . 18
4.15 Data of contact pressure gauge for diaphragm leakage detection (optional) . . . 18

5. Installation . . . 18
5.1 Installation requirements . . . 18
5.2 Mechanical installation . . . 19
5.3 Mounting the product . . . 21
5.4 Values for suction lines when using pulsation dampers . . . 21
5.5 Hydraulic connection . . . 22
5.6 Electrical connection . . . 22

6. Startup . . . 23
6.1 Checks before start-up . . . 23
6.2 Filling the pump housing with oil . . . 24
6.3 Filling the dosing head for the initial start-up for systems without flooded suction (DMH 281-288) . . . 24
6.4 Startup of DMH 280 . . . 24
6.5 Startup of DMH 281-288 . . . 25
6.6 Setting the pressure-relief valve . . . 26
6.7 Zero-point adjustment (DMH 281-288) . . . 27

7. Operation . . . 28
7.1 Switching the pump on and off . . . 28
7.2 Setting the dosing flow and locking the stroke-length adjusting knob . . . 28
7.3 Manual de-aeration of the dosing head while the pump is running . . . 28
7.4 Optional AR control unit . . . 28
7.5 Optional electric servomotor . . . 29
7.6 Optional electronic preselection counter . . . 29

8. Service . . . 29
8.1 Maintenance schedule . . . 29
8.2 Torques for tightening the dosing head screws . . . 29
8.3 Diaphragm leakage control for diaphragm leakage detection . . . 29
8.4 Oil change . . . 30
8.5 Checking the oil level . . . 30
8.6 Cleaning the suction and discharge valves . . . 30
8.7 Dosing head with single diaphragm (no diaphragm leakage detection) . . . 31
8.8 Dosing head with double diaphragm . . . 32
8.9 Replacing the power cable . . . 34

9. Shutdown . . . 35
9.1 Preparations for shutdown . . . 35
9.2 Taking the product out of operation . . . 35

10. Repairs and return . . . 35

11. Fault finding . . . 35
11.1 No dosing flow, pump runs without noise . . . 35
11.2 No dosing flow, pump runs with noise . . . 35
11.3 No dosing flow, pump runs with noise . . . 36
11.4 No dosing flow, pump runs with noise . . . 36
11.5 The pump is not dosing, the pressure-relief valve opens . . . 36
11.6 Dosing flow too low . . . 36
11.7 Dosing flow too high . . . 36

12. Dosing curves . . . 36

13. Disposing of the product . . . 37

1. General information

Read this document before you install the product. Installation and operation must comply with local regulations and accepted codes of good practice.

1.1 Hazard statements

The symbols and hazard statements below may appear in Grundfos installation and operating instructions, safety instructions and service instructions.

DANGER
Indicates a hazardous situation which, if not avoided, will result in death or serious personal injury.

WARNING
Indicates a hazardous situation which, if not avoided, could result in death or serious personal injury.

CAUTION
Indicates a hazardous situation which, if not avoided, could result in minor or moderate personal injury.

The hazard statements are structured in the following way:

SIGNAL WORD
Description of the hazard
Consequence of ignoring the warning
- Action to avoid the hazard.

1.2 Notes

The symbols and notes below may appear in Grundfos installation and operating instructions, safety instructions and service instructions.

Observe these instructions for explosion-proof products.

A blue or grey circle with a white graphical symbol indicates that an action must be taken.

A red or grey circle with a diagonal bar, possibly with a black graphical symbol, indicates that an action must not be taken or must be stopped.

If these instructions are not observed, it may result in malfunction or damage to the equipment.

Tips and advice that make the work easier.

1.3 Target group

These installation and operating instructions are intended for professional installers and for the operators of the product.

Qualification and training

The persons responsible for the installation, operation and service must be appropriately qualified for these tasks.

Areas of responsibility, levels of authority and the supervision of the persons must be precisely defined by the operator. If necessary, the persons must be trained appropriately.

Risks of not observing the safety instructions

Non-observance of the safety instructions may have dangerous consequences for persons, the environment or the pump, and may result in the loss of any claim for damages.

The following hazards may arise:

- personal injury from exposure to electrical, mechanical or chemical influences
- damage to the environment or personal injury from leakage of harmful substances.

1.4 Safety instructions for the operator and user

WARNING
Electric shock
Death or serious personal injury
- Keep liquids away from the power supply and electrical components.

Before starting work on the pump, make sure the pump is disconnected from the power supply.

The system must be depressurised.

You must follow all safety regulations described here, as well as existing national regulations on health and environment protection, accident prevention, and any internal working, operating and safety regulations regarding the operator.

Hot or cold parts of the pump must be protected to prevent accidental contact.

Information attached to the pump must be observed.

Leakages of dangerous substances must be disposed of in a way that is not harmful to humans, animals or the environment.

Damage caused by electrical energy must be prevented. Observe the regulations of the local electricity supply company.

Only original accessories and original spare parts should be used.

1.5 Safety of the system in the event of a failure in the dosing pump

WARNING
Chemical hazard
Death or serious personal injury
- Make sure that no chemicals released from the pump or no damaged lines impair system parts and buildings.
- We recommend the installation of leak monitoring solutions and drip trays.

The dosing pump has been designed according to the latest technologies and is carefully manufactured and tested.

If it fails regardless of this, the safety of the overall system must be ensured. Use the relevant monitoring and control functions for this.

According to EN ISO 13850, the system must be connected to an external emergency stop device or emergency shutdown device.

1.6 Dosing chemicals

WARNING
Chemical hazard
Death or serious personal injury
- Observe the safety data sheets and safety instructions of the chemical manufacturer when handling chemicals.
- Wear personal protective equipment when working with chemicals.

When dosing chemicals, observe the following:

- Before switching on the power supply, the dosing lines must be connected in such a way that no chemical in the dosing head can spray out and put people at risk.
- The dosing medium is pressurised and can be harmful to health or the environment.
- When working with chemicals, the accident prevention regulations applicable at the installation site must be applied.
- A de-aeration hose routed into a container, such as a drip tray, must be connected to the de-aeration valve.
- The dosing medium must be in its liquid aggregate state.
- The freezing and boiling points of the dosing medium must be observed.
- The resistance of the parts that come into contact with the dosing medium, such as dosing head, valve ball, gaskets and lines, depends on the medium, media temperature and operating pressure.
- Parts in contact with the dosing media must be resistant to the dosing medium under operating conditions.

For more information, see the list of pumped liquids in the data booklet. See also *Liquids | Grundfos*.

2. Handling and storing the product

2.1 Storage

When storing the product, make sure you comply with the following:

- Observe the permissible ambient conditions.
- The storage location must be protected from rain, humidity, condensation, direct sunlight and dust.
- The product must be drained completely.
- The product must be cleaned.

Related information

4.9 Ambient and operating conditions

2.2 Unpacking

When unpacking the product, make sure you comply with the following:

- Install the product as soon as possible after unpacking.
- Observe the permissible ambient conditions.

Related information

4.9 Ambient and operating conditions

2.3 Transport

Do not throw or drop the product.

When transporting the product, make sure you comply with the following:

- The product must only be transported by trained persons.
- Wear personal protective equipment.
- Observe the permissible ambient conditions.
- The product must be drained completely.
- The product must be cleaned.
- Use the original packaging or equivalent to protect the product during transport.
- Use appropriate lifting and transporting devices.
- Secure the product during transport to prevent it from tilting or moving.
- Avoid strong impact loads.
- If the pump is installed in a system during transport, make sure it is secured on the mounting plate with the 6 vertical safety screws.

Related information

4.9 Ambient and operating conditions

3. Product introduction

3.1 Product description

DMH 28X are positive-displacement pumps with hydraulic diaphragm control. The operating principle of the dosing pump is shown in the sectional drawing. See the figures below.

The rotational movement of the motor (1p) is converted via the worm gear (2p) and eccentric (3p) into the reciprocating movement of the piston (6p). The piston has a hollow bore and a row of radial control holes, which provide a hydraulic connection between the drive area and the piston stroke area. The sliding sleeve (5p) covers the control holes during the stroke and seals the stroke area from the drive area.

The hydraulic-driven movement of the PTFE diaphragm (Q) displaces an equivalent volume of dosing medium from the dosing head (2) into the dosing line. With the suction stroke, the piston creates a low pressure, which is established in the dosing head. The ball valve (3b) on the dosing side closes and the dosing medium flows through the suction valve (3a) into the dosing head.

The stroke volume size is determined by the position of the sliding sleeve. The active stroke length and corresponding average dosing flow can be changed continuously and linearly from 10 % to 100 % using the stroke-length adjusting knob and Vernier scale (L).

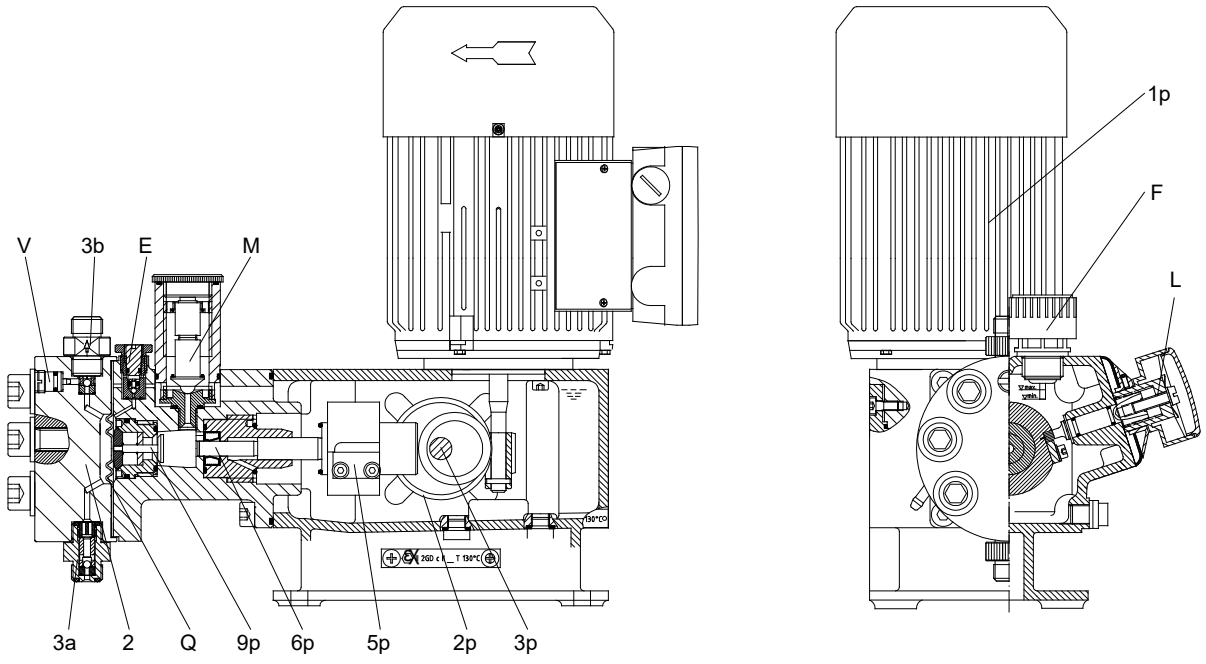

DMH 280

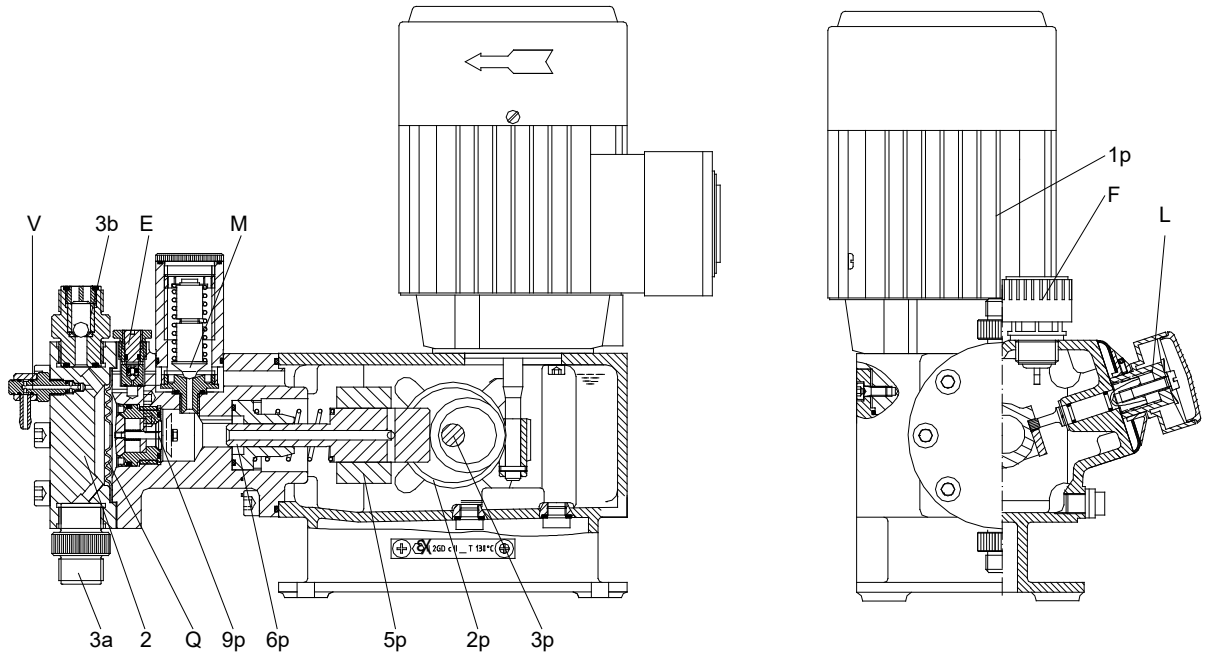

DMH 281

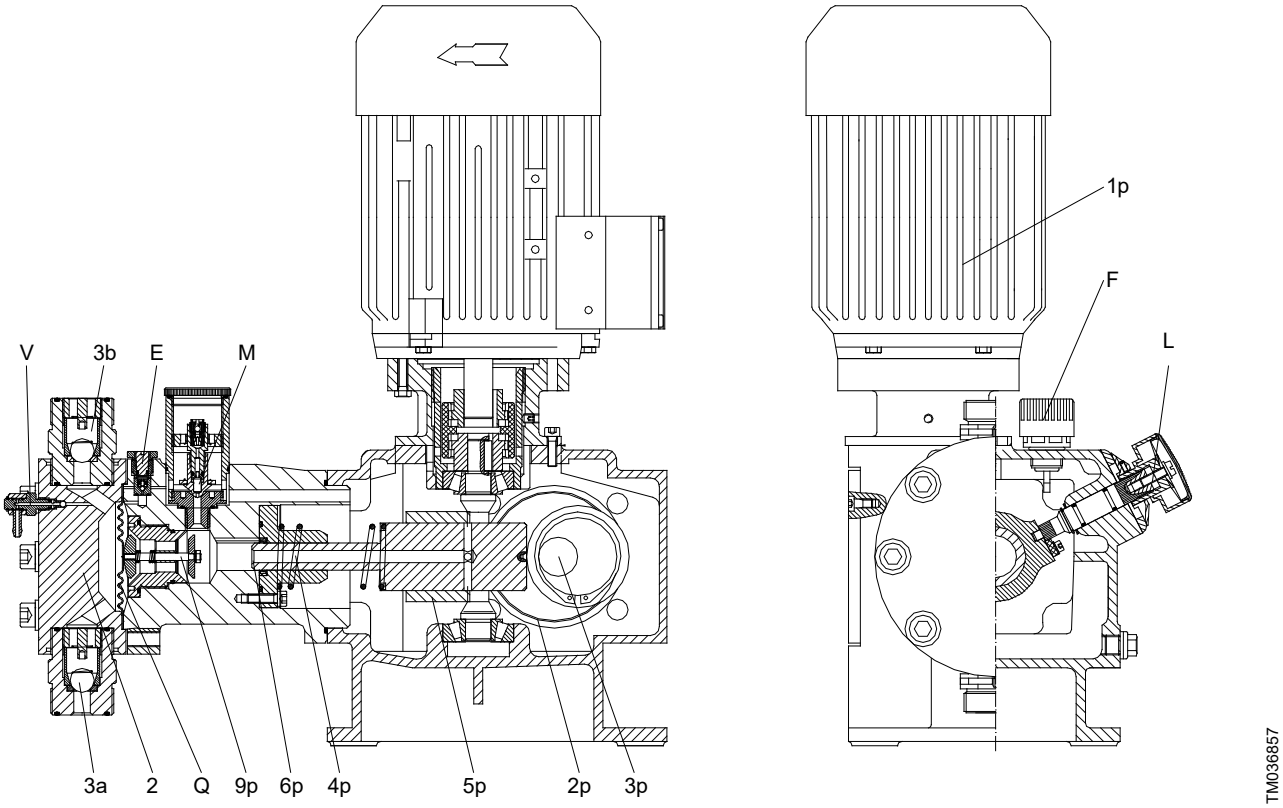

DMH 283

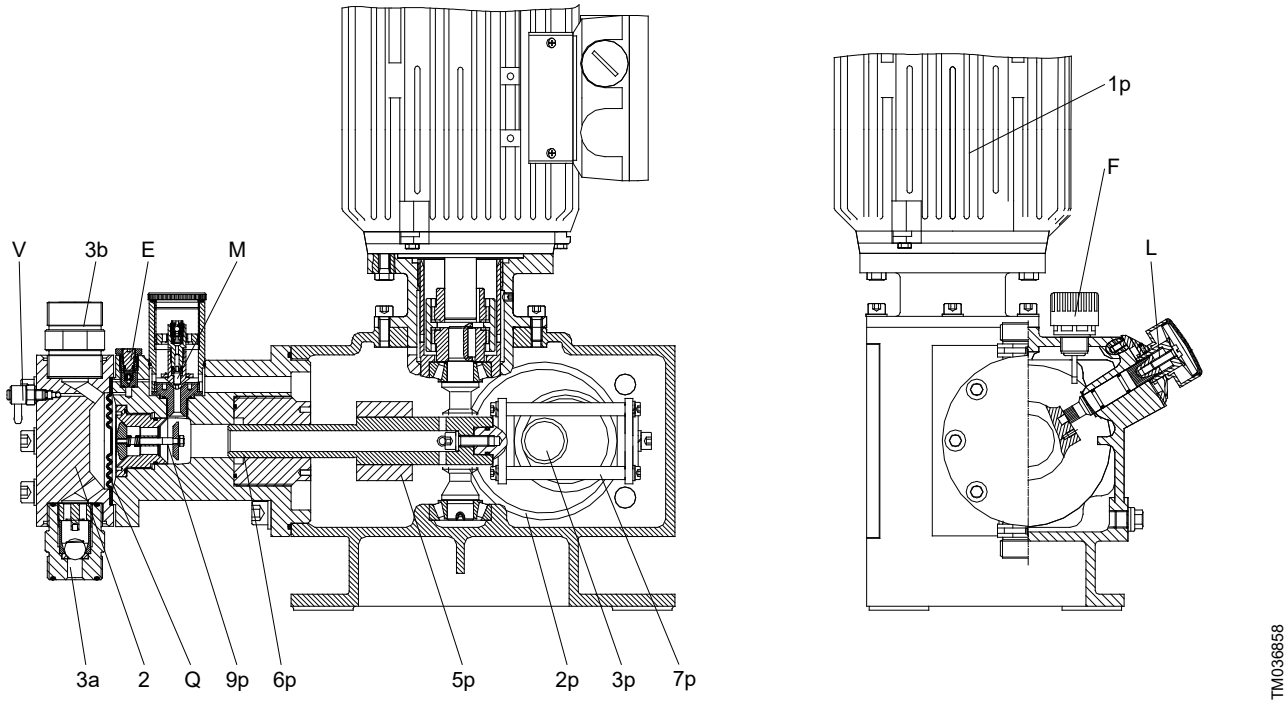

DMH 285, 286, 287

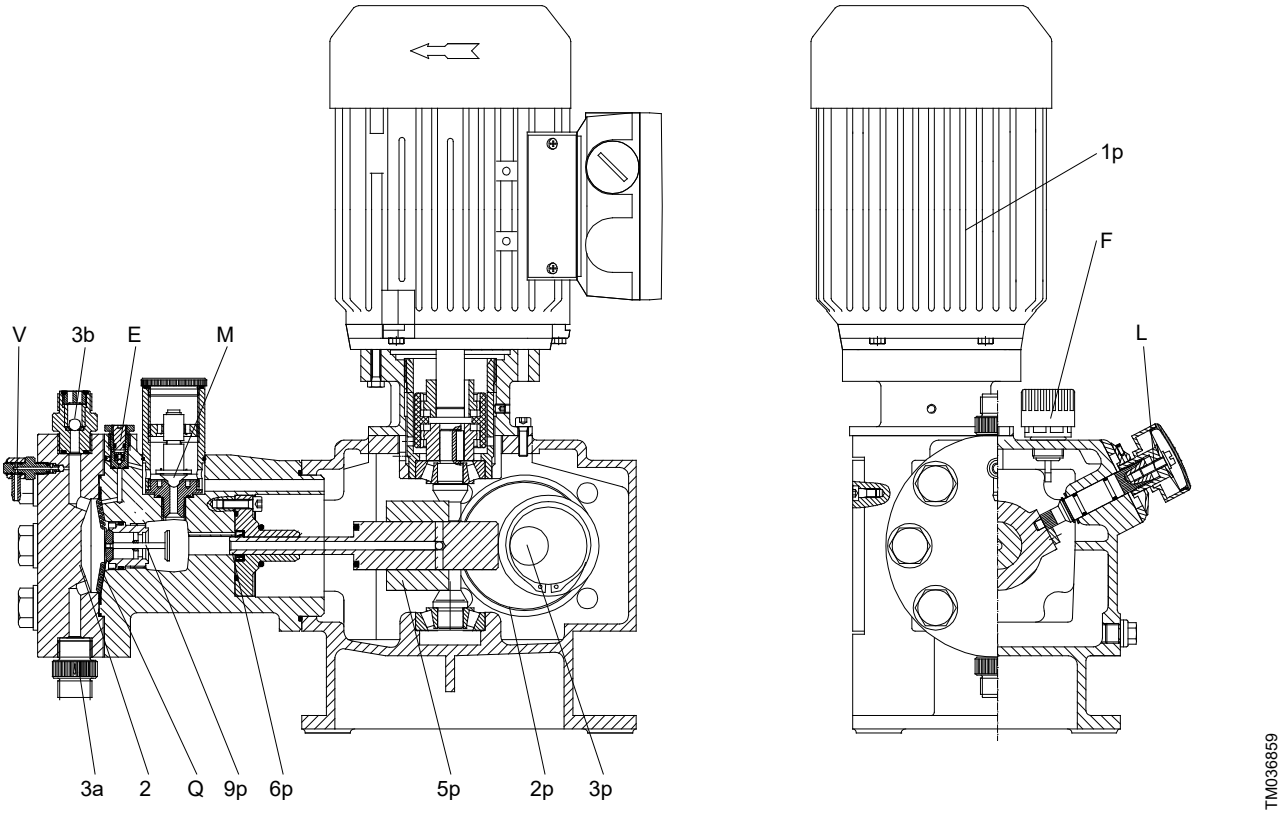

DMH 288

Pos.	Component
1p	Motor
2p	Worm gear
3p	Eccentric
4p	Return spring (not with drive size 3)
5p	Sliding sleeve
6p	Piston
7p	Crank
M	Combined pressure-relief and degassing valve
E	Degassing valve
9p	Diaphragm protection system (AMS)
Q	Dosing diaphragm
2	Dosing head
V	Dosing head de-aeration screw
3a	Suction valve
3b	Discharge valve
L	Stroke-length adjusting knob
F	Oil-filling screw with dipstick

3.1.1 Combined pressure-relief and degassing valve

The combined pressure-relief and degassing valve (M) opens if there is an excessive pressure build-up in the dosing system and provokes the constant degassing of the hydraulic medium.

3.1.2 Diaphragm protection system AMS

The diaphragm protection system AMS (9p) has a keypad, which is connected to the dosing diaphragm. The dosing diaphragm oscillates freely in the dosing head and cannot be overstretched due to a fault in the dosing system since the diaphragm protection valve closes if such a fault occurs.

3.1.3 Double-diaphragm system and diaphragm leakage detection (optional)

The piston diaphragm and high-tech dosing pumps with drift-free diaphragm leakage detection are equipped with the following:

- dosing head with PTFE double-diaphragm system,
- non-return ball valve with built-in contact pressure gauge.

Double-diaphragm system

Dosing pumps with a double-diaphragm system with no diaphragm leakage detection have no pressure gauge. In this case the non-return ball valve is fitted with a locking unit. The valve can be retrofitted with a contact pressure gauge.

Non-return ball valve

In order for the diaphragm leakage detection to work and to protect the diaphragms, the gap must be fully de-aerated. Dosing heads with a double diaphragm are equipped with a non-return ball valve (T) to prevent air from flowing back during the filling and de-aeration process (2u).

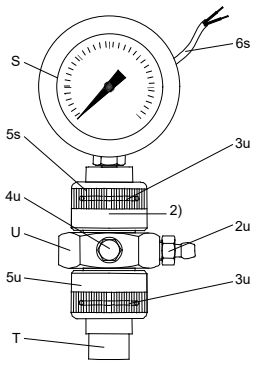

Contact pressure gauge

Pos.	Component
S	Contact pressure gauge
5s	Union nut
6s	Contact output
T	Non-return ball valve
U	Connection piece
2u	De-aeration screw
3u	O-rings
4u	Connection for earthing cable
5u	Union nut
2)	For dosing heads with a double diaphragm with no contact pressure gauge (no diaphragm leakage detection), a locking unit is fitted instead of the contact pressure gauge.

Functional principle of the diaphragm leakage detection

The non-return valve and the gap between the diaphragms are factory-filled with paraffin oil as a separating agent. During startup on the test stand they are set in such a way that there is always a hydraulically separated equilibrium between the valve and diaphragm gap. The pressure gauge indicates "0" when the pump is running and when it is stopped.

If one of these diaphragms breaks, the dosing or hydraulic medium penetrates into the gap between the diaphragms and, when the ball is removed, into the valve. The system pressure is therefore impinged on the valve and the contact pressure gauge is activated. Depending on the design of the system, the electrically isolated reed contact can trigger an alarm device or the pump can be switched off.

The contact is triggered at the preset pressure as shown in the table below:

Description and use	Set pressure [bar]
For pumps from 16 to 100 bar Pressure gauge 0 to 100 bar	10
For pumps from 16 to 100 bar Explosion-proof pressure gauge 0 to 100 bar	10
For pumps up to 200 bar Pressure gauge 0 to 200 bar	10
For pumps up to 200 bar Explosion-proof pressure gauge 0 to 200 bar	10

If the pump is fitted with an explosion-proof motor, use the explosion-proof contact pressure gauge (Ex) with switch amplifier.

3.2 Intended use

DMH 28X pumps are suitable for liquid, non-abrasive and non-flammable media strictly in accordance with the instructions in this manual.

Other applications or the operation of pumps in ambient and operating conditions, which are not approved, are considered improper and are not permitted. Grundfos accepts no liability for any damage resulting from incorrect use.

To operate a pump which has been identified as an explosion-proof pump for the dosing of inflammable media or for operation in potentially explosive operating sites in accordance with the EC directive 2014/34/EU, refer to the enclosed manual "ATEX-approved pumps" in addition to this manual.

Explosion-proof pumps are identified from the pump and motor nameplates. An EC declaration of conformity is provided in accordance with the EC directive 2014/34/EU, the so-called ATEX directive. This declaration of conformity replaces the declaration of conformity in this manual.

The operational safety of the supplied pump is only ensured if it is used in accordance with section Technical data. The specified limit values must not be exceeded.

3.3 Improper operating methods

The operational safety of the pump is only guaranteed if it is used in accordance with section Intended use.

To operate a pump which has been identified as an explosion-proof pump for the dosing of inflammable media or for operation in potentially explosive operating sites in accordance with the EC directive 2014/34/EU, refer to the enclosed manual "ATEX-approved pumps" in addition to this manual.

Explosion-proof pumps are identified from the pump and motor nameplates. An EC declaration of conformity is provided in accordance with the EC directive 2014/34/EU, the so-called ATEX directive. This declaration of conformity replaces the declaration of conformity in this manual.

Switch off the pump and protect it against unintentional operation in the following cases:

- if the pump has been damaged,
- if the pump no longer seems to be operational,
- if the pump has been stored for an extended period of time in poor conditions.

Changes or modifications to the pump are only permitted after consultation with the manufacturer. Original spare parts and accessories should be used. Grundfos accepts no liability for any damage resulting from incorrect use.

Related information

3.2 Intended use

3.4 Type key

The type key is used to identify the precise pump and is not used for configuration purposes.

Type
DMH 55-100D B-SS/V/SS-X-E 2 A1A1 X EM A G

Nominal dosing capacity [l/h]
DMH **55** -100D B-SS/V/SS-X-E 2 A1A1 X EM A G

Max. pressure [bar]	
DMH 55- **100D** B-SS/V/SS-X-E 2 A1A1 X EM A G	
100D	Pumps marked with a "D" after the pressure value are double-head pumps.

Control variant	
DMH 55-100D **B** -SS/V/SS-X-E 2 A1A1 X EM A G	
B	Standard (manual control)
S1	Stroke counter NAMUR, NC output
AR [1]	AR control unit, pump-mounted
AW [1]	AR control unit, wall-mounted
D3	Servomotor, 1AC 115-230 V, 50/60 Hz, 4-20 mA control (without manual operation)
D4	Servomotor, 24 VDC, 4-20 mA control (without manual operation)
D6	EX servomotor, 1AC 115-230 V, 50/60 Hz, 4-20 mA control, type EX II 2G Ex db IIB T4
D7	EX servomotor, 24 VDC, 4-20 mA control, type EX II 2G Ex db IIB T4

[1] It is only for models 280 and 281.

Dosing head variant	
DMH 55-100D B- **SS** /V/SS-X-E 2 A1A1 X EM A G	
SS	Stainless steel 1.4571 (EN 10027-2), 316Ti (AISI)
Y	Alloy C-4, 2.4610 (EN 10027-2)

Gasket material	
DMH 55-100D B-SS/ **V** /SS-X-E 2 A1A1 X EM A G	
E	EPDM
V	FKM
T	PTFE

Valve ball material	
DMH 55-100D B-SS/V/ **SS** -X-E 2 A1A1 X EM A G	
SS	Stainless steel 1.4401 (EN 10027-2), 316 (AISI)
C	Ceramic (up to DN 20)
Y	Alloy C-4, 2.4610 (EN 10027-2)

Terminal box position (also AR control or VFD position)	
DMH 55-100D B-SS/V/SS- **X** -E 2 A1A1 X EM A G	
X	Opposite side of dosing head (3 o'clock)
D	Towards dosing head (9 o'clock)
S	Towards adjusting knob (6 o'clock)
R	Opposite side of adjusting knob (12 o'clock)

Supply voltage	
DMH 55-100D B-SS/V/SS-X- **E** 2 A1A1 X EM A G	
E	3AC 230/400 V, 50/60 Hz, 440-480 V, 60 Hz (motors < 0.75 kW) 3AC 230/400 V, 50 Hz, 460 V, 60 Hz (IE3, motors ≥ 0.75 kW)
G	1AC 230 V, 50/60 Hz (motors ≤ 0.09 kW) 1AC 230 V, 50 Hz (motors 0.18 - 0.37 kW)
H	1AC 115 V, 50/60 Hz (motors ≤ 0.09 kW) 1AC 115 V, 60 Hz (motors 0.18 - 0.37 kW)
F	Without motor, NEMA flange
0	Without motor, IEC flange
4	3AC 230/400 V, 50 Hz (EX motors)
5	3AC 220/380 V, 60 Hz (EX motors) 3AC 220/380 V, 60 Hz, 440 V, 60 Hz (IE3, motors ≥ 0.75 kW)
K	3AC 500 V, 50 Hz
L	3AC 240/415 V, 50 Hz
P	3AC 240/415 V, 60 Hz
N	3AC 255/440 V, 60 Hz
M	3AC 400/690 V, 50 Hz (standard in power plants)

Valve type (suction/discharge)	
DMH 55-100D B-SS/V/SS-X-E **2** A1A1 X EM A G	
1	Standard valves, not spring-loaded
2	Spring-loaded suction and discharge valve (0.05 bar)
3	Spring-loaded suction valve (0.05 bar) and discharge valve (0.8 bar)

Hydraulic connections (first = discharge, second = suction)	
DMH 55-100D B-SS/V/SS-X-E 2 **A1A1** X EM A G	
A	G 5/8, for pipes with internal thread Rp 1/4 (SS, Y)
A1	G 5/4, for pipes with internal thread Rp 3/4 (SS, Y)
B6	G 3/8, for pipes 4/6 mm (cutting-ring connection) (SS)
V	G 5/8, for pipes with internal thread 1/4 NPT (SS)
A3	G 5/4, for pipes with internal thread 3/4 NPT (SS)
C2	G 5/8, for pipes 8/10 mm (cutting-ring connection) (SS)

Power plug (only 1AC motors)	
DMH 55-100D B-SS/V/SS-X-E 2 A1A1 **X** EM A G	
X	No plug
F	EU (Schuko)
B	USA, Canada
I	Australia, New Zealand, Taiwan
E	Switzerland

Motor variant and certification	
DMH 55-100D B-SS/V/SS-X-E 2 A1A1 X **EM** A G	
EM	Standard motor (without certificates)
E0	Motor with PTC for thermal protection (without certificates)
E1	EX motor, type EX II 2G EEx e II T3 (without certificates)
E2	EX motor, type EX II 2GD EEx de IIC T4, without PTC (without certificates)
E3	Pump with API approval (without pump and motor certificates)
E5	EX motor, type EX II 2GD EEx de IIC T4, with PTC (without certificates)
FA	VFD (variable frequency drive) (without certificates)
FB	VFD with I/O extension board (without certificates)
FC	VFD with internal Profibus (without certificates)
MP	Standard motor (with certificates)
K0	Motor with PTC for thermal protection (with certificates)
K1	EX motor, type EX II 2G EEx e II T3 (with certificates)
K2	EX motor, type EX II 2GD EEx de IIC T4, without PTC (with certificates)
K3	Pump with API approval (with pump and motor certificates)
K5	EX motor, type EX II 2GD EEx de IIC T4, with PTC (with certificates)

Pump housing material	
DMH 55-100D B-SS/V/SS-X-E 2 A1A1 X EM **A** G	
A	Aluminium
C	Grey cast iron

Pump design	
DMH 55-100D B-SS/V/SS-X-E 2 A1A1 X EM A **G**	
G	Grundfos
N	Neutral

3.5 Nameplate

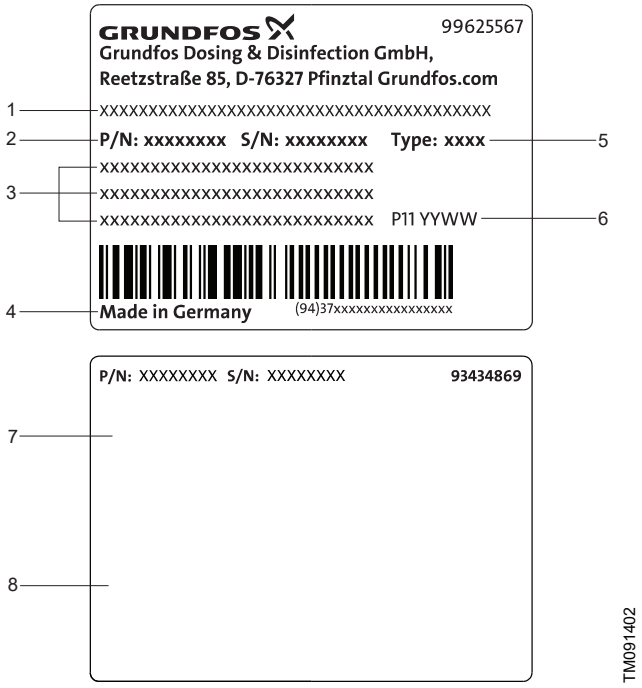

Pos.	Description
1	Type designation
2	Product number, Serial number
3	Pump performance by frequency
4	Country of origin
5	Pump model
6	Production code (year and week)
7	Marks of approval
8	ATEX designation

4. Technical data

4.1 Pump performance

Performance data at maximum counterpressure

The pump can be operated in the range between 10 % and 100 % of the maximum dosing capacity.

Q is the dosing capacity per dosing head. Double-head pumps have double the capacity.
P max is the maximum counterpressure.

Pump model	Pump type	50 Hz			60 Hz		
		Q	p max.	Max. stroke rate	Q	p max.	Max. stroke rate
		[l/h]	[bar]	[n/min]	[l/h]	[bar]	[n/min]
DMH 280	DMH 1,45-200	1.45	200	63	1.74	200	76
	DMH 2,22-200	2.22	200	96	2.66	200	115
	DMH 2,81-200	2.81	200	120	3.37	200	144
	DMH 3,42-200	3.42	200	144	-	-	-
DMH 281	DMH 2-100	2	100	29	2.4	100	35
	DMH 4,2-100	4.2	100	63	5	100	75
	DMH 6,4-100	6.4	100	96	7.7	100	115
	DMH 8-100	8	100	120	9.6	100	144
	DMH 9,6-100	9.6	100	144	-	-	-
DMH 283	DMH 10-100	10	100	26	12	100	31.2
	DMH 19-100	19	100	54	23	100	65
	DMH 27-100	27	100	75	32	100	90
	DMH 33-100	33	100	92	40	100	110
	DMH 40-100	40	100	112	48	100	134
	DMH 55-100	55	100	153	-	-	-
DMH 285	DMH 40-100	40	100	56	48	100	67
	DMH 52-100	52	100	73	63	100	88
	DMH 70-100	70	100	98	84	100	118
	DMH 80-100	80	100	112	96	100	134
	DMH 105-100	105	100	146	-	-	-
DMH 286	DMH 85-50	85	50	56	102	50	67.2
	DMH 111-50	111	50	73	133	50	87.6
	DMH 170-50	170	50	112	204	50	134
	DMH 222-50	222	50	146	-	-	-
DMH 287	DMH 18-200	18	200	56	22	200	63
	DMH 23-200	23	200	73	28	200	88
	DMH 31-200	31	200	98	37	200	118
	DMH 36-200	36	200	112	43	200	134
	DMH 50-200	50	200	146	-	-	-
DMH 288	DMH 7,5-200	7.5	200	54	9.0	200	65
	DMH 10,4-200	10.4	200	75	12.5	200	90
	DMH 12,8-200	12.8	200	92	15.4	200	110
	DMH 15,5-200	15.5	200	112	18.6	200	134
	DMH 21-200	21	200	153	-	-	-

Minimum counterpressure

A positive pressure difference of at least 2 bar is required between the suction valve and the discharge valve.

If the total counter-pressure (at the dosing point) and geodetic height difference between the suction valve and the dosing point is less than 2 bar (20 m WC), a pressure-loading valve must be installed immediately upstream of the dosing point.

Parameter	Value
Minimum counterpressure	2 bar at the pump discharge valve

Accuracy

The values in the table below apply to the following conditions:

- dosing medium with viscosity and density similar to those of water,
- fully de-aerated dosing head,
- standard pump version.

Parameter	Value
Dosing flow fluctuation	± 1.5 % within the control range 10-100%
Linearity deviation	± 2 % of the full-scale value

4.2 Maximum inlet pressure

Pump model	[bar]
DMH 280	1
DMH 281	10
DMH 283	5
DMH 285	5
DMH 286	5
DMH 287	5
DMH 288	5

4.3 Suction lift

The suction lift is the height difference between the medium level in the tank and the suction valve.

The values in the tables below apply to the following conditions:

- Newtonian liquid
- Dosing medium with a density similar to that of water.
  The values in the table are in m, they have to be decreased for dosing media with higher density.
- Non-degassing and non-abrasive liquid
- Stroke length: 100 %
- Counterpressure: 1.5 to 3 bar
- Suction line and dosing head filled (continuous operation).
  For priming with wetted valves with inlet line and dosing head not filled, the values have to be reduced by approximately 1 m.

Suction lift for dosing medium with viscosity similar to that of water

Pump model	Pump type	Maximum suction lift [m WC]
DMH 280	All	Flooded suction
DMH 281	All	1
DMH 283	All	1
DMH 285	All	1
DMH 286	DMH 85-50	1
	DMH 111-50	1
	DMH 170-50	Flooded suction
	DMH 222-50	Flooded suction
DMH 287	All	1
DMH 288	All	1

Suction lift for media with maximum permissible viscosity

Pump model	Maximum suction lift [m WC]
All	Flooded suction

4.4 Sound pressure level

The sound pressure level was tested according to DIN 45635-01-KL3.

Pump model	dB(A)
DMH 280	55 ± 5
DMH 281	55 ± 5
DMH 283	65 ± 5
DMH 285	75 ± 5
DMH 286	75 ± 5
DMH 287	75 ± 5
DMH 288	65 ± 5

4.5 Motor

The motor design can be found on the nameplates of the motor and the pump.

4.6 Enclosure class

The enclosure class depends on the motor variant selected. See the nameplate of the motor.

The specified protection class can only be guaranteed if the power supply cable with the same protection class is connected.

Pumps with electronics: The protection class is only guaranteed if the sockets are protected. Plugs must be inserted correctly and caps must be screwed on tightly.

4.7 AR control unit

Functions of pumps with electronics

- **Continuous operation** button for function test and dosing head de-aeration,
- memory function (stores a maximum of 65,000 pulses),
- two-level tank-empty signal, for example with a Grundfos tank-empty sensor,
- stroke signal and adjustable low-level signal, for example as a feedback to the control room,
- dosing controller function (only with sensor - optional),
- access-code-protected settings,
- remote on/off,
- hall sensor
- operating hours counter,
- motor monitoring.

Operating modes:

Manual

- Stroke frequency: manually adjustable between zero and maximum

Contact signal control

- Multiplier (1:n) and divisor (n:1)

Current signal control 0-20 mA / 4-20 mA

- Adjustment of stroke frequency proportional to the current signal.
- Weighting of current input.

Inputs and outputs

Inputs	
Contact signal	Maximum load: 12 V, 5 mA
Current 0-20 mA	Maximum load: 22 Ω
Remote on/off	Maximum load: 12 V, 5 mA
Two-level tank-empty signal	Maximum load: 12 V, 5 mA
Dosing controller and diaphragm leakage sensor	

Outputs	
Current 0-20 mA	Maximum load: 350 Ω
Error signal	Maximum ohmic load: 50 VDC / 75 VAC, 0.5 A
Stroke signal	Contact time per stroke: 200 ms
Low-level signal	Maximum ohmic load: 50 VDC / 75 VAC, 0.5 A

AR control unit factory settings

Inputs and outputs: NO (normally open) or NC (normally closed).

4.8 Power supply

Power supply for AC voltage

Rated voltage	Permissible deviation from rated value
230 / 400 V	± 10 %
240 / 415 V	± 10 %
115 V	± 10 %

Maximum permissible mains impedance

(0.084 + j 0.084) Ohm (testing according to DIN EN 61000-3-11).
These details apply to 50 Hz.

4.9 Ambient and operating conditions

The installation location must be protected from rain, humidity, condensation, direct sunlight and dust.
Do not install the pump outdoors.

Maximum relative humidity: 70 % at +40 °C, 90 % at +35 °C.

4.9.1 DMH pumps with motor labelled for coolant temperature -20 °C ≤ T_{amb} ≤ 40 °C

Observe the nameplate of the motor.

- Permissible ambient temperature: 0 °C (standard) to +40 °C (for an installation height up to 1000 m above sea level).
- Pumps with minimum T_{amb} -20 °C are available on request.
- Permissible storage temperature: -20 °C to +50 °C.

4.9.2 DMH pumps with motor labelled for coolant temperature -20 °C ≤ T_{amb} ≤ 55 °C and with dosing head material stainless steel or PVDF

Observe the nameplate of the motor.

- Permissible ambient temperature: 0 °C (standard) to +55 °C (for an installation height up to 1000 m above sea level).
- Pumps with minimum T_{amb} -20 °C are available on request.
- Permissible storage temperature: -20 °C to +55 °C.

4.10 Dimensions

4.10.1 Dimensions of single-head pumps

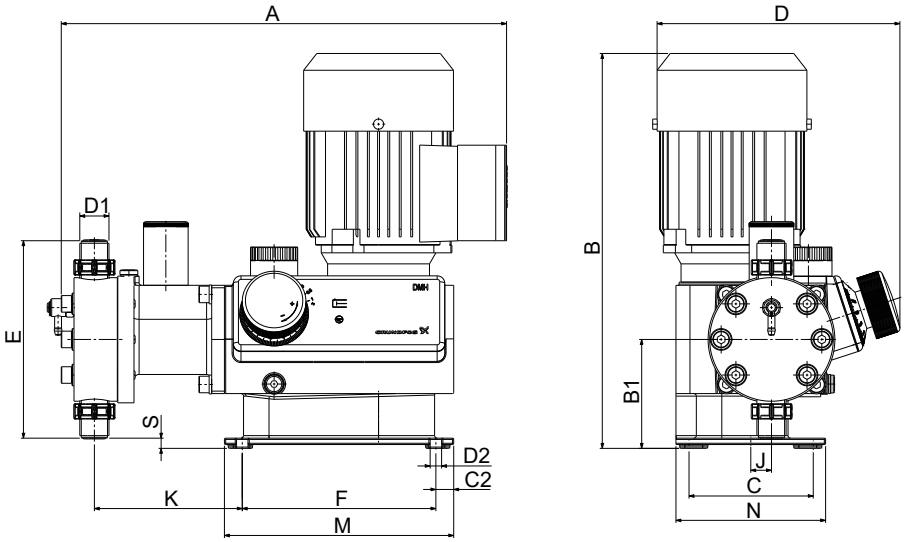

All dimensions are in mm, except for the thread designations.

Pump model	A	B	C	C2	D	D1	D2	E	F	B1	J	K	M	N	S
DMH 280	365	336	97.5	14	192	G 3/8	9	142	152	85.5	16	114	180	117.5	14.5
DMH 281	348	336	97.5	14	192	G 5/8	9	155	152	85.5	16	114	180	117.5	8
DMH 283	437	493	156	20	254	G1 1/4	9	211	185	126	10	182	225	180	20.5
DMH 285	510	553	145.5	24.5	274	G1 1/4	9	179	240	129	25	187	290	194.5	39
DMH 286	510	553	145.5	24.5	274	G1 1/4	9	234	240	129	25	191	290	194.5	11.5
DMH 287	490	553	170	24.5	274	G 5/8	9	208	240	129	25	176	290	194.5	24.5
DMH 288	425	492	156	20	155.5	G 5/8	9	208	185	126	10	173	225	180	22

4.10.2 Dimensions of double-head pumps

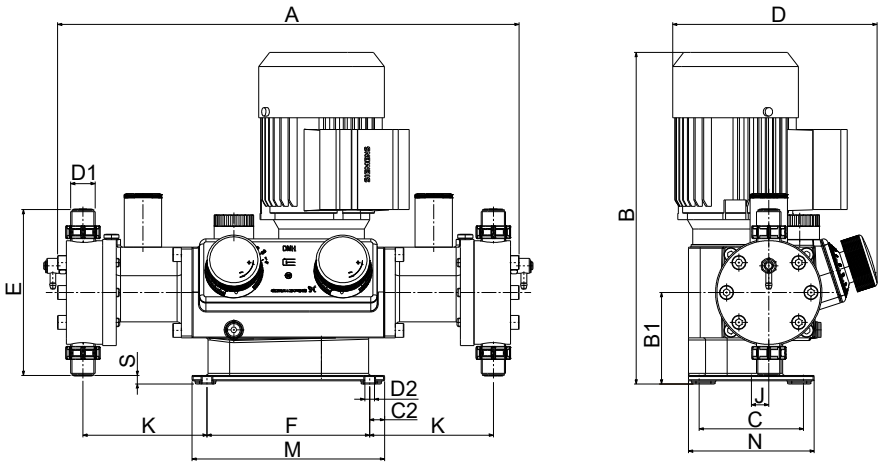

All dimensions are in mm, except for the thread designations.

Pump model	A	B	C	C2	D	D1	D2	E	F	B1	J	K	M	N	S
DMH 280	465	336	97.5	14	192	G 3/8	9	142	152	85.5	16	114	180	117.5	14.5
DMH 281	432	336	97.5	14	192	G 5/8	9	155	152	85.5	16	114	180	117.5	8
DMH 283	706	493	156	20	254	G1 1/4	9	211	260	126	10	182	300	180	20.5
DMH 285	820	553	145.5	24.5	274	G1 1/4	9	179	333	129	25	187	382	194.5	39
DMH 286	820	553	145.5	24.5	274	G1 1/4	9	234	333	129	25	191	382	194.5	11.5
DMH 287	814	553	170	24.5	274	G 5/8	9	208	333	129	25	176	382	194.5	24.5
DMH 288	700	492	156	20	155.5	G 5/8	9	208	260	126	10	173	300	180	22

4.11 Weight

Pump model	Dosing head material	Weight [kg]	
		Single-head pump	Double-head pump
DMH 280	Stainless steel 1.4571 Alloy C-4, 2.4610	13.7	20.4
DMH 281	Stainless steel 1.4571 Alloy C-4, 2.4610	13	19
DMH 283	Stainless steel 1.4571 Alloy C-4, 2.4610	36	54
DMH 285	Stainless steel 1.4571 Alloy C-4, 2.4610	43	64
DMH 286	Stainless steel 1.4571 Alloy C-4, 2.4610	45	71
DMH 287	Stainless steel 1.4571 Alloy C-4, 2.4610	45	71
DMH 288	Stainless steel 1.4571 Alloy C-4, 2.4610	36	54

4.12 Stroke volume

Pump model	Stroke volume [cm^3]
DMH 280	0.35
DMH 281	1.1
DMH 283	6
DMH 285	12
DMH 286	25.3
DMH 287	5.4
DMH 288	2.33

4.13 Characteristics of the dosing medium

WARNING
Chemical hazard
Death or serious personal injury
- Observe the safety data sheets and safety instructions of the chemical manufacturer when handling chemicals.

The dosing medium must have the following basic characteristics for standard pumps:

- liquid,
- non-abrasive,
- non-flammable.

The dosing of abrasive media is possible with certain versions, on request.

The dosing of inflammable media is possible with certain versions of explosion-proof pumps, in accordance with ATEX.

The freezing and boiling points of the dosing medium must be observed.

Parts in contact with the dosing media must be resistant to the dosing medium under operating conditions.

Maximum permissible viscosity at operating temperature

Applies to:

- Newtonian liquids,
- non-degassing media,
- media without suspended matter,
- media with a density similar to water.

The viscosity values in the table are approximate values and apply to standard pumps.

Pump model	Stroke rate up to 63 [n/min]	Stroke rate 64-120 [n/min]	Stroke rate from 121 [n/min]
	Maximum viscosity [mPa s]		
DMH 280	5	5	5
DMH 281	100	50	5
DMH 283	100	50	5
DMH 285	100	50	5
DMH 286	100	50	5
DMH 287	100	50	5
DMH 288	100	50	5

Viscosity increases as temperature decreases.

Permissible temperature of the dosing medium

Dosing head material	Min. temperature	Max. temperature
		p < 200 bar
	[°C]	[°C]
Stainless steel, DIN 1.4571	-10	90
Alloy C-4, 2.4610	-10	90

For SIP/CIP applications (not with ATEX): A temperature of 145 °C at a counterpressure of max. 2 bar is permitted for a short period (15 minutes).

4.14 Materials

WARNING
Chemical hazard
Death or serious personal injury

- Observe the safety data sheets and safety instructions of the chemical manufacturer when handling chemicals.
- Make sure that the pump is suitable for the respective dosing medium.

The resistance of the parts that come into contact with the dosing medium depends on the medium, media temperature and operating pressure.

Parts in contact with the dosing media must be resistant to the dosing medium under operating conditions.

For more information, see the list of pumped liquids in the data booklet. See also *Liquids | Grundfos*.

Pump housing material

- Pump housing: Al 226.

AR control unit enclosure

- Upper part of enclosure: PPO blend,
- Lower part of enclosure: aluminium.

4.15 Data of contact pressure gauge for diaphragm leakage detection (optional)

The following data is not valid for explosion-proof contact pressure gauges.

The contact pressure gauge has a reed switch with electrically isolated contact output, maximum switching power 10 W for DC current or 10 VA for AC current. The maximum switching voltage is 75 V for DC current or 50 V for AC current, maximum switching current 0.5 A.

The switching function is set up as an NC contact. If the diaphragm breaks, the current circuit is interrupted.

The pressure gauge has a 2-metre cable.

5. Installation

5.1 Installation requirements

WARNING
Chemical hazard
Death or serious personal injury

- Observe the safety data sheets and safety instructions of the chemical manufacturer when handling chemicals.
- Wear personal protective equipment when working on the dosing head, connections or lines.

CAUTION
Hot surface
Minor or moderate personal injury

- Pumps with AC motors may become hot. Allow a minimum space of 100 mm to the fan cover.

The pump must be installed in such a way that it is easily accessible during operation and maintenance work.

Observe the specifications for the installation location and applications.

The installation location must be protected from rain, humidity, condensation, direct sunlight and dust.

The pump must not be installed outdoors.

The pump must be mounted on a flat surface.

Observe the permissible ambient conditions. See section Ambient and operating conditions.

Observe the flow direction when installing the valves. The flow direction is indicated by an arrow on the valve.

Incorrect operation or faults on the pump or system might lead to excessive or insufficient dosing, or the permissible pressure might be exceeded. Consequential faults or damage must be evaluated by the operator and appropriate precautions must be taken to avoid them.

Related information

4.9 Ambient and operating conditions

5.2 Mechanical installation

5.2.1 Installation tips

The drawing shows an example of an optimum installation. The following subsections describe various components and when they should be used.

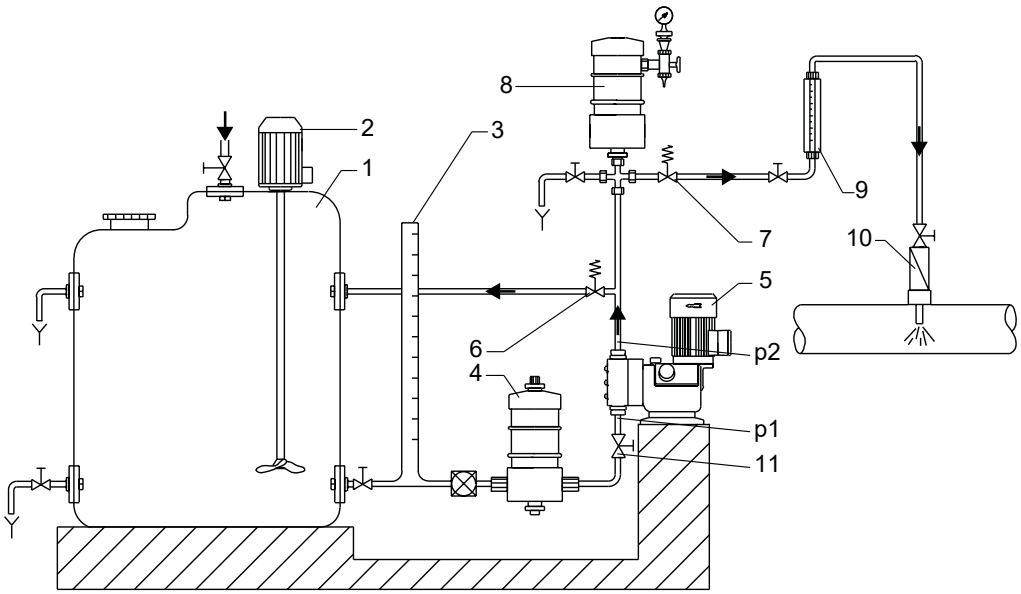

Pos.	Component
1	Dosing tank
2	Electric mixer
3	Graduated cylinder
4	Pulsation damper, suction side
5	Dosing pump
6	Pressure-relief valve
7	Pressure-loading valve
8	Pulsation damper, discharge side
9	Measuring glass
10	Injection unit
11	Isolating valve
p1	Pressure at the suction valve
p2	Pressure at the discharge valve

5.2.1.1 Installation with ball valve and non-return valve

For easy de-aeration of the dosing head, we recommend installing a ball valve (12) with a bypass line immediately after the discharge valve.

In order to prevent backflow in the discharge line and to simplify startup, we recommend that you install a non-return valve (13) in the discharge line.

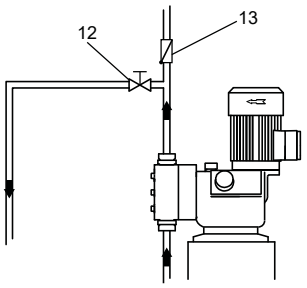

TM066783

5.2.1.2 Installation of the suction line

When installing the suction line, observe the following points:

- Keep the suction line as short as possible. Avoid tangling.
- Use swept bends instead of elbows.
- Always run the suction line up towards the suction valve.
- Avoid loops. Loops may cause air bubbles.

5.2.1.3 Installation with pressure-relief valve

To protect the dosing pump and discharge line from excessive pressure, we recommend installing a pressure-relief valve (6) in the discharge line.

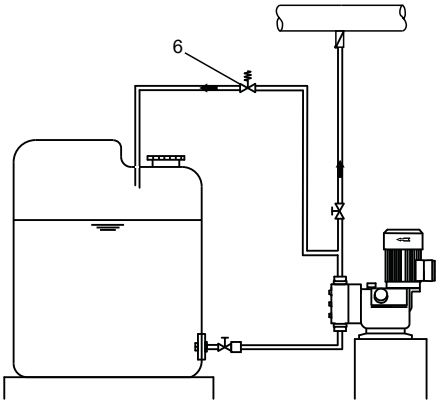

TM066784

5.2.1.4 Installation on a tank

When dosing non-degassing media with a viscosity similar to that of water, the pump can be mounted on a tank.

- Observe the maximum suction lift.
- For sedimenting media, we recommend installing a suction line with a filter (14). Install the foot valve 10 mm above the possible level of sedimentation.

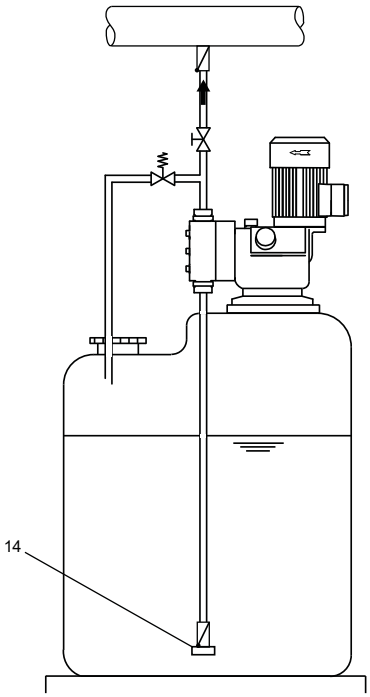

TM066786

Flooded suction

When dosing degassing media or media with a higher viscosity than that of water, the suction lift will be reduced. In these cases, flooded suction may be required.

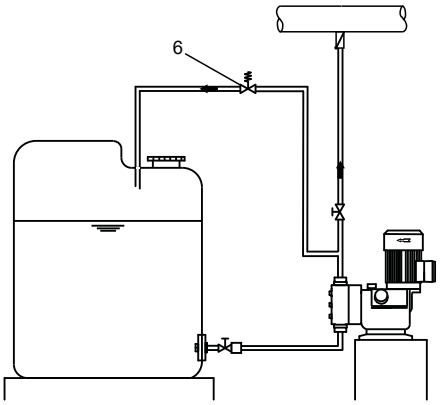

TM066784

5.2.1.5 Siphon effect

The pressure at the discharge valve (p2) must always be at least 1 bar higher than the pressure at the suction valve (p1). If this is not the case, for example in an installation with open outflow or with flooded suction, siphon effect may occur. To avoid the siphon effect, install a pressure-loading valve (7) in the discharge line and an isolating valve (11) directly before the suction valve.

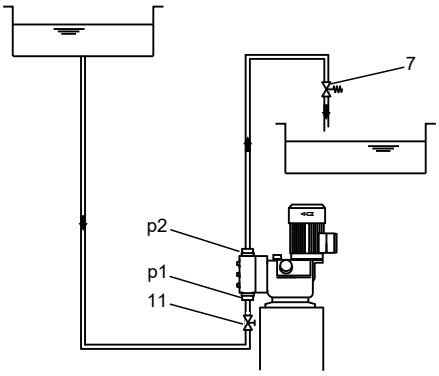

TM066788

5.2.1.6 Installation with pressure-loading valve

The pressure at the discharge valve (p2) must always be at least 1 bar higher than the pressure at the suction valve (p1). If the pressure difference (p2 minus p1) is lower than 1 bar, install a pressure-loading valve (7) in the discharge line.

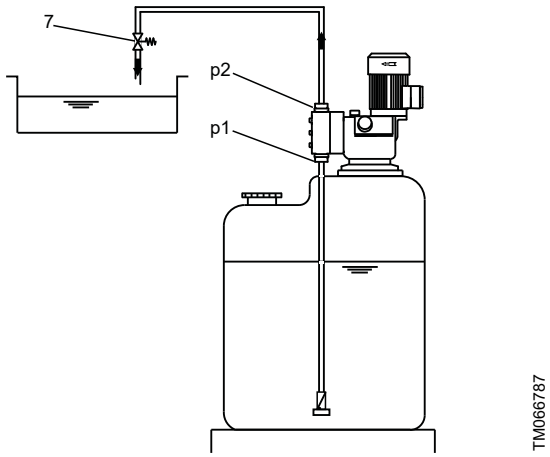

5.2.1.7 Installation with pulsation damper on the suction side

In a dosing system, pressure peaks can occur in the suction line in case of one of the following conditions:

- long suction line,
- suction line with small diameter,
- dosing medium with high density or viscosity,
- large pump.

To protect the suction line against pressure peaks, we recommend installing a properly sized pulsation damper (4) directly before the suction valve of the pump.

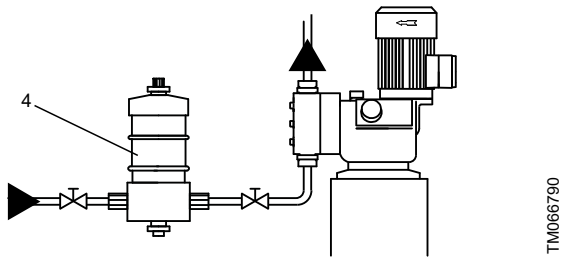

5.2.1.8 Installation with pulsation damper on the discharge side

In a dosing system, pressure peaks can occur in the discharge line in case of one of the following conditions:

- long discharge line,
- discharge line with small diameter,
- dosing medium with high density or viscosity,
- large pump.

To protect the discharge line against pressure peaks, we recommend that you install a properly sized pulsation damper (8) in the discharge line.

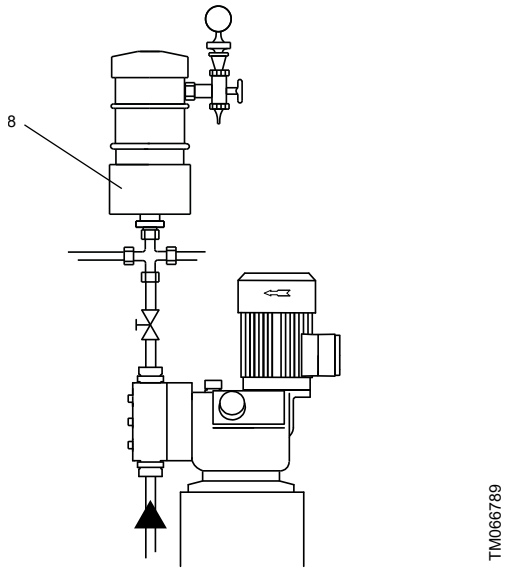

5.3 Mounting the product

The flow must run counter to gravity.

1. Mount the pump on a bracket or foundation using four screws.

5.4 Values for suction lines when using pulsation dampers

Use pulsation dampers for large high-speed pumps.

Since the pulsation is influenced by many factors, a system-specific calculation is essential. Request a calculation from our calculation program.

The following table shows the approximate values for the width and length of suction lines for which suction pulsation dampers are required.

The values apply to 50 Hz operation when water or similar liquids are dosed.

Pump model	Pump type	Nominal width of suction line	Maximum length of suction line [m]
DMH 280	DMH 1,45-200	DN 4	8
	DMH 2,22-200	DN 4	8
	DMH 2,81-200	DN 4	8
	DMH 3,42-200	DN 4	8
DMH 281	DMH 2-100	DN 8	8
	DMH 4,2-100	DN 8	8
	DMH 6,4-100	DN 8	8
	DMH 8-100	DN 8	8
	DMH 9,6-100	DN 8	8
DMH 283	DMH 10-100	DN 20	8
	DMH 19-100	DN 20	8
	DMH 27-100	DN 20	8
	DMH 33-100	DN 20	8
	DMH 40-100	DN 20	8
	DMH 55-100	DN 20	6
DMH 285	DMH 40-100	DN 20	8
	DMH 52-100	DN 20	8
	DMH 70-100	DN 20	6
	DMH 80-100	DN 20	5
	DMH 105-100	DN 20	3
DMH 286	DMH 85-50	DN 20	2.5
	DMH 111-50	DN 20	2.5
	DMH 170-50	DN 20	2.5
	DMH 222-50	DN 20	1.5
DMH 287	DMH 18-200	DN 8	8
	DMH 23-200	DN 8	4
	DMH 31-200	DN 8	3
	DMH 36-200	DN 8	2
	DMH 50-200	DN 8	1
DMH 288	DMH 7,5-200	DN 8	8
	DMH 10,4-200	DN 8	4

Pump model	Pump type	Nominal width of suction line	Maximum length of suction line [m]
	DMH 12,8-200	DN 8	3
	DMH 15,5-200	DN 8	2
	DMH 21-200	DN 8	1

5.5 Hydraulic connection

WARNING
Chemical hazard
Death or serious personal injury

- Observe the safety data sheets and safety instructions of the chemical manufacturer when handling chemicals.
- Wear personal protective equipment when working on the dosing head, connections or lines.
- Install a pressure-relief valve in the discharge line to provide protection against high pressure.

The resistance of the parts that come into contact with the dosing medium depends on the medium, media temperature and operating pressure.
Parts in contact with the dosing media must be resistant to the dosing medium under operating conditions.

A positive pressure difference of at least 2 bar is required between the suction valve and the discharge valve.
If the total counter-pressure (at the dosing point) and geodetic height difference between the suction valve and the dosing point is less than 2 bar (20 m WC), a pressure-loading valve must be installed immediately upstream of the dosing point.

Make sure you comply with the following points:

- Observe the suction lift and the line diameter.
- Cut hoses and pipes at right angles.
- Make sure there are no loops or kinks in the hoses.
- Keep the suction line as short as possible.
- Route the suction line up towards the suction valve.
- Keep hoses and pipes free from strain.

5.5.1 Connecting suction and discharge lines

1. Connect the suction line to the suction valve.
   The foot valve should remain 5-10 mm above the bottom of the tank or the possible level sedimentation level.
2. Connect the discharge line to the discharge valve.

■ **Connecting DN 20 pipes**

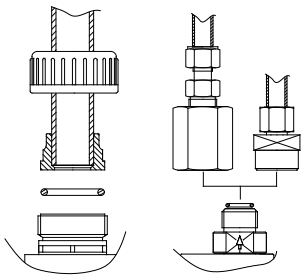

TM036457

1. Install the pipe depending on the pipe material and connection:
   - PVC pipes: glue the pipe.
   - PP, PVDF or stainless steel: weld the pipe.
   - Stainless steel: press the pipe in.
2. Fit the gasket.
3. Screw the pipe onto the valve using the union nut.

5.5.2 Connecting the dosing head de-aeration line

WARNING
Chemical hazard
Death or serious personal injury

- Dosing medium escapes from the hose nipple (I) of the de-aeration line. At high pressure, the medium may spray out. Turn the hose nipple (I) in the right direction, or drain the dosing medium through a suitable hose.
- Collect the dosing medium in a suitable container.

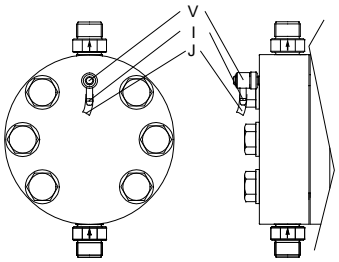

TM036862

Dosing head deaeration

The dosing head is equipped with a de-aeration screw (V) and a hose nipple (I). During deaeration, dosing medium leaks from the hose nipple. This may also happen during normal operation. The dosing medium should either be collected directly or via a deaeration line in a suitable container.
When using a de-aeration line, proceed as follows:

1. Connect the de-aeration line (J) to the de-aeration screw (V/I).
2. Shorten the de-aeration line (J) to at least 10 mm above the maximum tank level.
3. Insert the de-aeration line (J) downwards into the dosing tank or collection container without loops. Do not immerse it in the dosing medium.

5.6 Electrical connection

WARNING
Electric shock
Death or serious personal injury

- All electrical connections must be carried out by a qualified electrician in accordance with local regulations.
- The supply voltage must correspond to the values indicated on the nameplate.
- Do not manipulate or cut the power plug or cable.
- Switch off the power supply before starting any work on the pump.
- Do not open the pump housing.
- Protect cable connections and plugs from moisture and corrosion.

Make sure that the pump is suitable for the electricity supply on which it will be used.

5.6.1 Electric servomotor (optional)

To connect the servomotor to the power supply, see the installation and operating instructions for the servomotor.

5.6.2 Electronic preselection counter (optional)

To connect the electronic preselection counter to the power supply, see the installation and operating instructions for the electronic preselection counter.

5.6.3 Diaphragm controller (optional)

WARNING
Electric shock
Death or serious personal injury

- The contact pressure gauge must be earthed.

Explosion-proof pumps with diaphragm leakage detection are fitted with a contact pressure gauge in explosion-proof version.

See the figure below for the connection for the earth cable (4u).

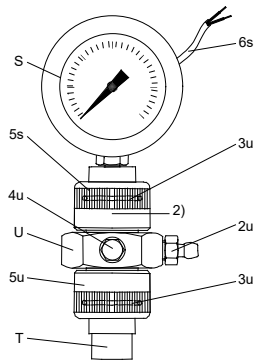

Pos.	Component
S	Contact pressure gauge
5s	Union nut
6s	Contact output
T	Non-return ball valve
U	Connection piece
2u	De-aeration screw
3u	O-rings
4u	Connection for earth cable
5u	Union nut
2)	Locking unit (instead of contact pressure gauge and its connection)

5.6.4 Power supply cable

WARNING
Electric shock
Death or serious personal injury
- The supply voltage must correspond to the values indicated on the nameplate.
- Do not manipulate or cut the power plug or cable.

WARNING
Chemical hazard
Death or serious personal injury
- Switch off the power supply before connecting the power supply cable.
- The pump can start automatically when the power supply is switched on.
- Make sure the pump has been correctly installed and is ready to be started before you switch on the power supply.

The assignment between the plug-and-socket connection and the pump must be labelled clearly.

5.6.4.1 Versions with power plug

1. Insert the power plug into the power socket.

5.6.4.2 Pumps permanently connected to the power supply

WARNING
Electric shock
Death or serious personal injury
- Pumps that are permanently connected to the power supply must be connected to a power switch or circuit breaker with a minimum contact gap of 3 mm in all poles.
- The power switch or circuit breaker must be integrated into the system upstream of the pump and marked as a disconnecting device. It must be easily accessible to the operator.

The enclosure class is only guaranteed if the power supply cable is connected with the same degree of protection.

Observe the direction of rotation.

Install a motor protecting switch or motor contactor, and set the bimetal relay to the rated motor current for the available voltage and frequency.

1. Connect the motor to the power supply in accordance with the local regulations and the connection diagram.
   Find the connection diagram on the terminal box cover

6. Startup

WARNING
Chemical hazard
Death or serious personal injury
- Observe the safety data sheets and safety instructions of the chemical manufacturer when handling chemicals.
- Wear personal protective equipment when working on the dosing head, connections or lines.
- Make sure the pump has been correctly installed and is ready to be started before you switch on the power supply.
- The pump housing must only be opened by persons authorized by Grundfos.
- Collect and dispose of all chemicals in a way that is not harmful to humans, animals or the environment.

Observe the flow direction.

The flow direction is indicated by an arrow on the valve.

6.1 Checks before start-up

- Check that the supply voltage corresponds to the values indicated on the nameplate.
- Check that all connections are secure. Tighten the connections, if necessary.
- Check that all electrical connections are correct.
- Check that the dosing head screws are tightened with the specified torque.
- Cross-tighten the dosing head screws using a torque wrench.

Torques

Pump model	Torque [Nm]
DMH 280	55-60
DMH 281	17-19
DMH 283	27-30
DMH 285	50-54
DMH 286	80-85
DMH 287	50-54
DMH 288	75-80

6.2 Filling the pump housing with oil

The pump is factory-checked, and the oil is drained for shipping purposes. Before start-up, add the special oil supplied with the pump.

The piston flange is filled with oil for easy start-up. The stroke-length adjusting knob must only be adjusted if the gear oil has been added, otherwise the oil will leak from the piston flange.

The numbers in brackets refer to the figures in section Product description.

1. Slacken and remove the oil-filling screw (F).
2. Slowly add the hydraulic oil supplied with the pump through the oil-filling opening until the oil reaches the mark on the dipstick.
3. Set the stroke-length adjusting knob (L) to 0.

Related information

3.1 Product description

6.3 Filling the dosing head for the initial start-up for systems without flooded suction (DMH 281-288)

WARNING
Chemical hazard
Death or serious personal injury

- Observe the safety data sheets and safety instructions of the chemical manufacturer when handling chemicals.
- Wear personal protective equipment when working on the dosing head, connections or lines.

The numbers in brackets refer to the figures in section Product description.

As suction support for systems without flooded suction, you can fill the dosing head with dosing medium before initial startup.

1. Unscrew the discharge valve (3b).
2. Fill the dosing medium into the dosing head (2).
3. Screw the discharge valve (3b) back in.
   Observe the flow direction. The flow direction is indicated by an arrow on the valve.

Related information

3.1 Product description

6.4 Startup of DMH 280

WARNING
Chemical hazard
Death or serious personal injury

- Wear personal protective equipment when working on the dosing head, connections or lines.
- Observe the safety data sheets and safety instructions of the chemical manufacturer when handling chemicals.

Check the oil level at least every two weeks and add oil, if necessary.

We recommend using original Grundfos gear oil.

See the Service kit catalogue on www.grundfos.com.

Rod length of oil dipstick: 27 mm.

Immersion depth up to the mark: approx. 5 mm.

Fill the dosing head for startup.

Filling the dosing head

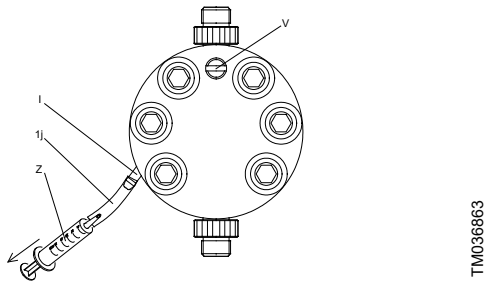

Pos.	Component
1j	Hose
I	Deaeration nipple
V	Deaeration screw
Z	Syringe

1. Loosen the dosing head de-aeration screw (V) by approx. 1 turn.
2. Fit the hose (1j) supplied with the pump onto the de-aeration nipple (I).
3. Using the syringe (Z) supplied with the pump, carefully draw the dosing medium until there is some liquid in the hose.
4. Tighten the de-aeration screw (V).
5. Remove the hose (1j) and the syringe (Z).
6. Set the stroke-length adjusting knob to 70 % and let the pump run for approx. 5 minutes.
7. Switch off the pump, check the oil level and add oil, if necessary.
8. Refit the oil-filling screw (F).

The pump is now ready for operation.

If the pump is not dosing, de-aerate the piston flange.

Oil types

Pump model	Pump type	Description
DMH 280	Single-head pump / Double-head pump	1.3 l DHG 68

De-aerating the piston flange

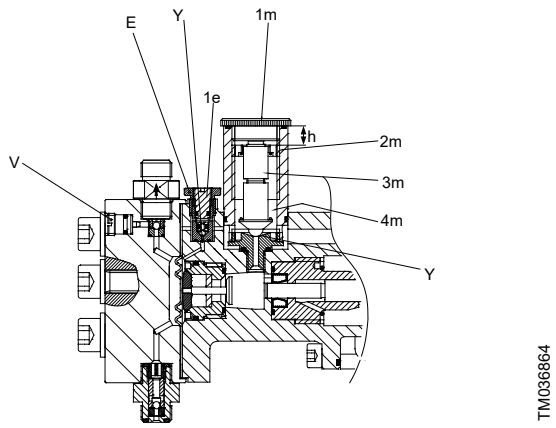

Pos.	Component
1q	Dosing head screws
2	Dosing head
3b	Discharge valve
F	Oil-filling screw with dipstick
L	Stroke-length adjusting knob
1l	Cover for stroke-length adjusting knob
M	Pressure relief valve
V	De-aeration screw
I	Hose nipple (connection for J)
J	De-aeration hose (not supplied with the pump)
1m	Cover of pressure-relief valve
2m	Adjusting screw
3m	Pressure-relief valve
4m	Spring
E	Degassing valve (cartridge)
1e	Adjusting screw
Y	Holes

1. Unscrew the cover of the pressure-relief valve (1m).
2. Measure the adjustment depth (h) of the adjusting screw (2m).
3. Unscrew the adjusting screw (2m).
4. Remove the pressure-relief valve (3m) with spring (4m).
5. Unscrew the entire degassing valve (cartridge) (E) using a fork wrench, size 14.
   Do not turn the inner slotted screw (adjusting screw (1e)), as this changes the degassing valve setting.
6. Connect the pump to the power supply.
7. Let the pump run for approx. 5 minutes at a stroke setting of 0 % until oil (without bubbles) appears around the holes (Y). Add oil, if necessary.
8. Switch off the pump and screw in the degassing valve (E) with front side O-ring.
9. Refit the pressure-relief valve (M/2m, 3m, 4m) in reverse order. Set the adjusting screw to the depth (h) already measured.
10. Set the stroke-length adjusting knob to 70 % and let the pump run for approx. 5 minutes.

The pump is now ready for operation.

Checking the degassing valve (cartridge)

The degassing valve (E) only operates with the spring (5e), ball (6e) and correct position of the adjusting screw (7e).

Check the setting of the degassing cartridge when the pump is switched off.

- Fully tighten the adjusting screw (7e) and then loosen by approx. 1/4 turn.

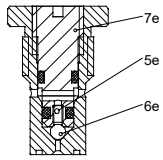

Pos.	Component
5e	Spring
6e	Ball
7e	Adjusting screw

Tighten the dosing head screws with a torque wrench after initial startup and every time the dosing head has been opened.
After 6-10 operating hours or after two days, cross-tighten the dosing head screws using a torque wrench.

Torques

Pump model	Torque [Nm]
DMH 280	55-60

Related information

5.1 Installation requirements
5.2.1 Installation tips

6.5 Startup of DMH 281-288

WARNING
Chemical hazard
Death or serious personal injury
- Wear personal protective equipment when working on the dosing head, connections or lines.
- Observe the safety data sheets and safety instructions of the chemical manufacturer when handling chemicals.

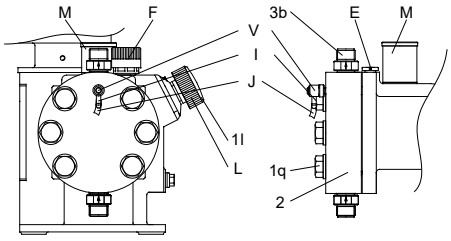

Pos.	Component
1q	Dosing head screws
2	Dosing head
3b	Discharge valve
E	Degassing valve
F	Oil-filling screw with dipstick
L	Stroke-length adjusting knob
1l	Cover for stroke-length adjusting knob
M	Pressure-relief valve
V	De-aeration screw
I	Hose nipple (connection for J)
J	De-aeration hose (not supplied with the pump)

1. Connect the pump to the power supply.
2. Set the stroke-length adjusting knob (L) to 0 %.
3. Let the pump run for approx. 5 minutes.

De-aerating the dosing head

WARNING
Chemical hazard
Death or serious personal injury

- Wear personal protective equipment when working on the dosing head, connections or lines.
- Observe the safety data sheets and safety instructions of the chemical manufacturer when handling chemicals.
- Dosing medium escapes from the hose nipple (I) of the de-aeration line. If the pressure is high, the medium may spray out. Turn the hose nipple (I) in the right direction, or drain the dosing medium through a suitable hose.

1. Loosen the de-aeration screw (V) by 1 turn to the left.
2. Turn the hose nipple (I) vertically downwards.
3. Set the stroke-length adjusting knob (L) to 15 %.
4. Let the pump run until the dosing medium flows from the de-aeration hose (J) or hose nipple (I) without any bubbles back into the tank.
5. Tighten the de-aeration screw (V).

Checking the oil level

Check the oil level at least every two weeks and add oil, if necessary.
We recommend the use of original gear oil.
See the Service Kit Catalogue on www.grundfos.com.

Rod length of oil dipstick: 35 mm, 27 mm for DMH 281.
Immersion depth up to the mark: approx. 5 mm.

1. Set the stroke-length adjusting knob (L) to 40 %.
2. Let the pump run for approx. 10 minutes with a stroke-length setting of 40 %.
3. Switch off the pump, check the oil level and add oil, if necessary.
4. Refit the oil-filling screw (F).

The pump is now ready for operation.

Oil types

Pump model	Pump type	Description
DMH 281	Single-head pump	1.3 l DHG 68
DMH 281	Double-head pump	1.3 l DHG 68
DMH 283	Single-head pump	3.5 l DHG 68
DMH 283	Double-head pump	4.5 l DHG 68
DMH 285	Single-head pump	5.5 l DHG 68
DMH 285	Double-head pump	7.5 l DHG 68
DMH 286	Single-head pump	5.5 l DHG 68
DMH 286	Double-head pump	7.5 l DHG 68
DMH 287	Single-head pump	5.5 l DHG 68
DMH 287	Double-head pump	7.5 l DHG 68
DMH 288	Single-head pump	3.5 l DHG 68
DMH 288	Double-head pump	4.5 l DHG 68

Tighten the dosing head screws with a torque wrench after initial startup and every time the dosing head has been opened.
After 6-10 operating hours or after two days, cross-tighten the dosing head screws using a torque wrench.

Torques

Pump model	Torque [Nm]
DMH 281	17-19
DMH 283	27-30
DMH 285	50-54
DMH 286	80-85
DMH 287	50-54
DMH 288	75-80

Related information

5.1 Installation requirements
5.2.1 Installation tips

6.6 Setting the pressure-relief valve

The pressure-relief valve is set to the pressure given by the customer, or to the rated pressure (maximum counter-pressure). The opening pressure can be set to a lower value by the customer.

Opening pressure of the pressure-relief valve

Rated pressure of the pump [bar]	Opening pressure of the pressure-relief valve [bar]
50	55
100	110
200	210

Setting the opening pressure

Do not block the pressure relief valve during adjustment.
When blocked, the pressure-relief valve does not work properly and can produce extremely high pressures in the pump or the system.

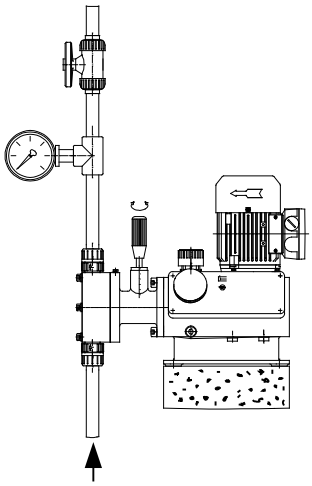

To set the operating pressure, a pressure gauge must be installed in the discharge line and an isolating valve must be installed after the pressure gauge.

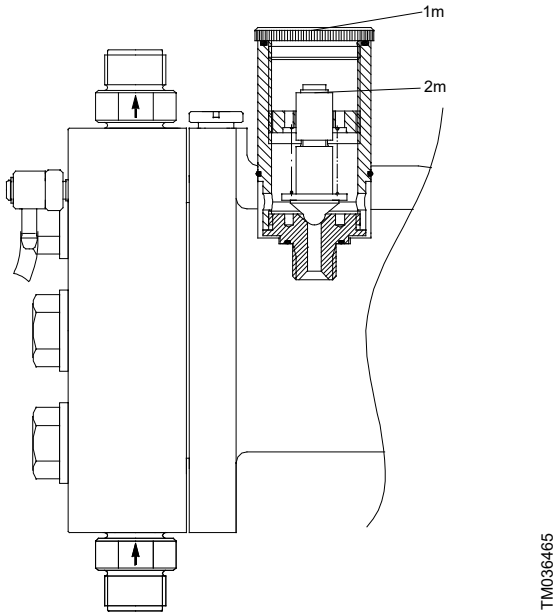

Setting the pressure-relief valve

For DMH 281-288, a special tool is required.

Set the pressure relief valve as follows:

1. Close the isolating valve after the pressure gauge.
2. Remove the cover (1m) from the pressure-relief valve.
3. Start the pump.
4. Adjust the pressure-relief valve.
   - **DMH 280:** Using a screwdriver, slowly turn the adjusting screw (2m) of the pressure relief valve clockwise until the desired opening pressure is obtained.
   - **DMH 281-288:** Using the special tool, slowly turn the adjusting nut (2m) of the pressure relief valve clockwise until the desired opening pressure is obtained.
5. Replace the cover of the pressure-relief valve.
6. Open the isolating valve after the pressure gauge.

6.7 Zero-point adjustment (DMH 281-288)

6.7.1 Zero-point adjustment for system pressures up to 100 bar

The zero point of the dosing pump is factory-set to a slightly lower counterpressure than the rated pressure of the pump. If the operating counterpressure deviates considerably from this value, an adjustment of the zero point will ensure more precise values.

Counterpressure at the factory-set zero point of the pump

Rated pressure of the pump [bar]	Counterpressure at the factory-set zero point [bar]
50	30
100	80

6.7.2 Zero-point adjustment for system pressures of 100 bar and more

! The pump cannot be operated if the stroke-length adjusting knob is fully open.

Depending on the pump adjustment, this value may already be lower than 100 % on the scale for system pressures of 100 bar and more.

Adjusting range approx. 20-100 %

If the rated pressure of the pump is 100 bar or higher, the maximum dosing flow is factory-set to a scale value of 100 %. The zero point is not set. The zero dosing flow is reached depending on the system pressure, for example already at 20 % on the scale.

Adjusting range approx. 0-80 %

You can make an adjustment so that the zero dosing flow is at a scale value of zero, but the non-permissible operating range is then within 100 % of the scale value. Loosen the stroke-length adjusting knob completely for a maximum dosing flow, and then close it by approx. 10 %.

Counterpressure at the factory-set zero point of the pump

Rated pressure of the pump [bar]	Counterpressure at the factory-set maximum point [bar]
200	160

6.7.3 Adjusting the zero point

WARNING
Chemical hazard
Death or serious personal injury

- Observe the safety data sheets and safety instructions of the chemical manufacturer when handling chemicals.
- Wear personal protective equipment when working on the dosing head, connections or lines.
- Always adjust the zero point with the discharge line connected and with operating counterpressure.

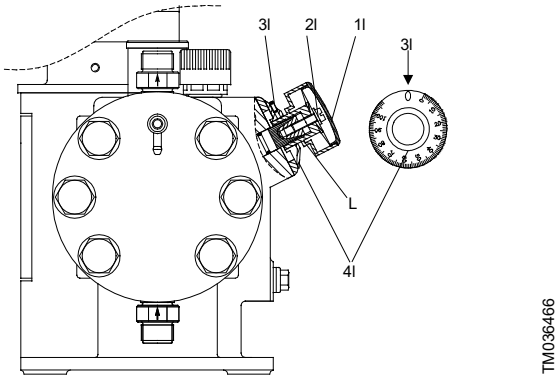

Pos.	Component
L	Stroke-length adjusting knob
1I	Cover
2I	Locking screw
3I	Screw
4I	Scale ring

1. Fit a measuring device on the suction side, for example place the suction line in a graduated measuring beaker.
2. Set the dosing flow to 15 %.
3. Remove the cover (1I) from the stroke-length adjusting knob (L).
4. Use a screwdriver to loosen the locking screw (2I) by approximately 2 turns.
5. Switch on the pump.
6. Slowly turn the stroke-length adjusting knob towards the zero point until the dosing (the liquid level falls) stops in the measuring device.
7. Switch off the pump.
8. Set the scale ring (4I) to zero.
   - Loosen the screw (3I) in the scale ring (4I) slightly using an hexagon key, M3.
   - Turn the scale ring (4I) until both "0" are the same on the scale and scale ring.
   - Tighten the screw (3I).
9. Depending on the application, tighten the locking screw (2I) so that the stroke-length adjusting knob can still be turned or cannot be turned anymore.
10. Replace the cover (1I).

7. Operation

7.1 Switching the pump on and off

WARNING
Chemical hazard
Death or serious personal injury
- Make sure the pump has been correctly installed and is ready to be started before you switch on the power supply.

To start the pump, switch on the power supply.
To stop the pump, switch off the power supply.

7.2 Setting the dosing flow and locking the stroke-length adjusting knob

The pump cannot be operated if the stroke-length adjusting knob is fully open.
Depending on the pump adjustment, this value may already be lower than 100 % on the scale for system pressures of 100 bar and more.
Open the stroke-length adjusting knob completely and then close by approx. 10 % in order to set the dosing flow to 100 %.

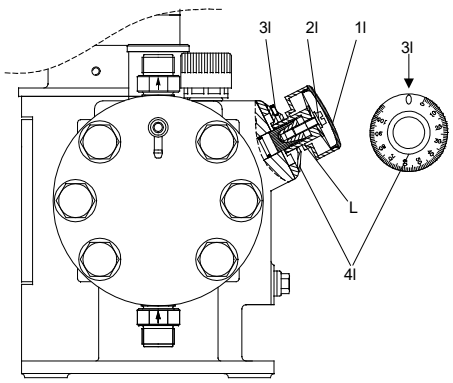

Pos.	Component
L	Stroke-length adjusting knob
1I	Cover
2I	Locking screw
3I	Screw
4I	Scale ring

1. Remove the cover (1I) from the stroke-length adjusting knob (L).
2. Use a screwdriver to loosen the locking screw (2I) by approximately 2 turns.
3. Increase or reduce the dosing flow while the pump is running.
   Slowly turn the stroke-length adjusting knob to the left or right to set the desired dosing volume.
4. Depending on the application, tighten the locking screw (2I) so that the stroke-length adjusting knob can still be turned or cannot be turned anymore.
5. Replace the cover (1I).

7.3 Manual de-aeration of the dosing head while the pump is running

WARNING
Chemical hazard
Death or serious personal injury
- Wear personal protective equipment when working on the dosing head, connections or lines.
- Observe the safety data sheets and safety instructions of the chemical manufacturer when handling chemicals.
- Dosing medium escapes from the hose nipple (I) of the de-aeration line. At high pressure, the medium may spray out. Turn the hose nipple (I) in the right direction, or drain the dosing medium through a suitable hose.

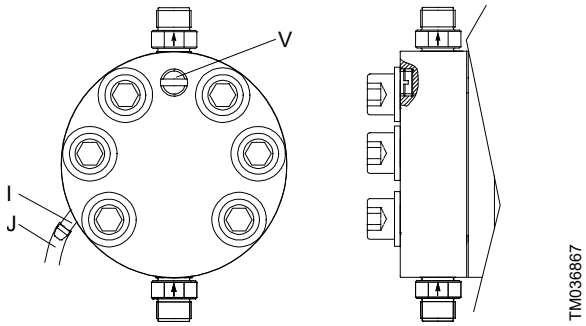

DMH 280

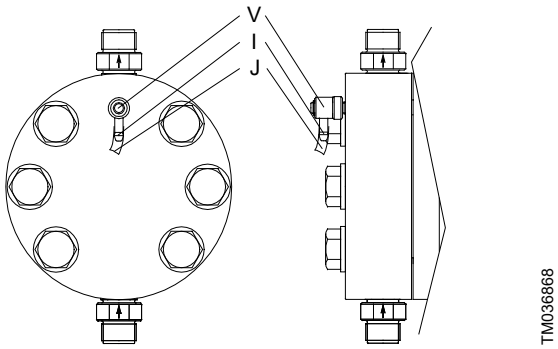

DMH 281-288

Pos.	Component
I	Hose nipple
J	De-aeration hose
V	De-aeration screw

DMH 280: If the de-aeration screw is too loose, the O-ring may be washed away.

1. Loosen the de-aeration screw (V):
   - **DMH 280:** loosen the de-aeration screw by max. 1/2 turn to the left.
   - **DMH 281-288:** loosen the de-aeration screw by 1 turn to the left.
2. Let the pump run until the dosing medium flows from the de-aeration hose (J) or hose nipple (I) back into the tank without any bubbles.
3. Carefully tighten the de-aeration screw (V).

7.4 Optional AR control unit

Observe the installation and operating instructions for the AR control unit as well as the instructions in this manual.

7.5 Optional electric servomotor

Observe the installation and operating instructions for the electric servomotor.

7.6 Optional electronic preselection counter

Observe the installation and operating instructions for the electronic preselection counter.

8. Service

WARNING
Chemical hazard
Death or serious personal injury

- Maintenance work must only be carried out by qualified persons.
- Wear personal protective equipment when working on the dosing head, connections or lines.
- Observe the safety data sheets and safety instructions of the chemical manufacturer when handling chemicals.
- The pump housing must only be opened by persons authorized by Grundfos.
- Stop the pump and disconnect it from the power supply before carrying out any maintenance work.
- Collect and dispose of all chemicals in a way that is not harmful to humans, animals or the environment.

The resistance of the parts that come into contact with the dosing medium depends on the medium, media temperature and operating pressure.

Parts in contact with the dosing media must be resistant to the dosing medium under operating conditions.

Observe the flow direction.

Do not operate the pump with closed valves.

Replace the dosing diaphragm every time you change the gear oil.

The maintenance schedule must be observed. If the daily checks are not carried out, diaphragm leakage might not be recognized, which may lead to a chemical hazard.

To ensure a long service life and high dosing accuracy, wearing parts, such as diaphragms and valves, must be regularly checked for signs of wear. Replace worn parts with original spare parts made of suitable materials.

Pumps used for media that are harmful to health must be decontaminated.

All safety and protective devices must be put back into operation or activated immediately after completion of the work.

For service kits and spare parts, see the Service Kit Catalogue on the Grundfos Product Center.

Contact your Grundfos service partner if you have any questions.

Related information

8.1 Maintenance schedule

8.1 Maintenance schedule

Daily

Check if liquid is leaking from the dosing head or valves.

Every two weeks

Check the oil level. Add oil, if necessary.

After 4,000 operating hours or every 12 months

Clean the valves.

In case of stainless-steel valves, clean the inner parts of the valves.

Clean the valves if the pump does not perform well and in the event of a fault.

After 8,000 operating hours or every 12 months

Replace the diaphragm.

Change the gear oil.

In dusty operating environments, change the gear oil every 3,000 operating hours.

After diaphragm leakage of the double diaphragm

Remove the non-return ball valve immediately and clean it.

Clean the non-return ball valve only after diaphragm leakage.

In the event of a fault or if the pump does not perform well, have the grooved ring checked and replaced by a specialist.

8.2 Torques for tightening the dosing head screws

Tighten the dosing head screws with a torque wrench every time the dosing head has been opened.

After 6-10 operating hours or after two days, cross-tighten the dosing head screws using a torque wrench.

Pump model	Torque [Nm]
DMH 280	55-60
DMH 281	17-19
DMH 283	27-30
DMH 285	50-54
DMH 286	80-85
DMH 287	50-54
DMH 288	75-80

8.3 Diaphragm leakage control for diaphragm leakage detection

WARNING
Chemical hazard
Death or serious personal injury

- If a diaphragm is leaky, replace the diaphragms and clean the non-return valve.

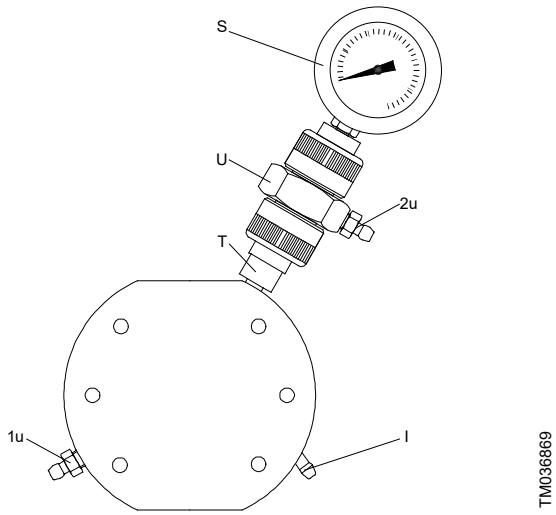

DMH 280: *dosing head with double diaphragm*

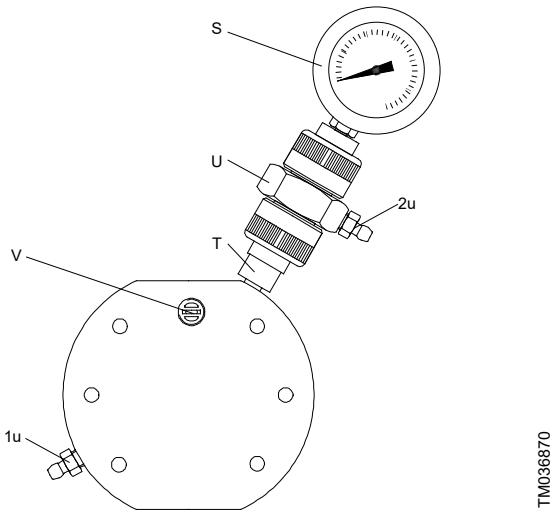

DMH 281-288: *dosing head with double diaphragm*

Pos.	Component
I	Connection for de-aeration line
S	Contact pressure gauge
T	Non-return ball valve
U	Connection piece
1u	Filling screw
2u	De-aeration screw
V	De-aeration screw

If a diaphragm leakage has been detected, first of all check whether an error has been displayed, as different external factors such as the heating of dosing or hydraulic medium can cause the cracked medium between the diaphragms to be displaced into the valve, thereby causing an error to occur.

1. Briefly open the de-aeration screw (2u) and then close it again.
2. Switch on the pump.

If a diaphragm leakage is detected again after a short period of time, a diaphragm is broken.

8.4 Oil change

WARNING
Chemical hazard
Death or serious personal injury
- Wear personal protective equipment when working on the dosing head, connections or lines.
- Replace the dosing diaphragm every time you change the oil.

Collect the oil and dispose of it in a way that is not harmful to humans, animals or the environment.
Install a new gasket (1b) every time you change the oil.

We recommend the use of original oil.
See the Service Kit Catalogue on www.grundfos.com for product numbers.

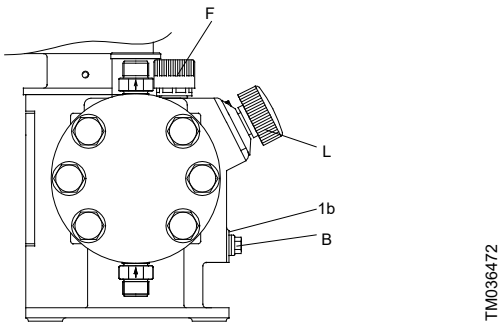

Pos.	Component
B	Locking screw
1b	Gasket
F	Oil-filling screw with dipstick
L	Stroke-length adjusting knob

List of oil types

Pump model	Pump type	Description
DMH 280	Single-head pump / Double-head pump	1.3 l DHG 68
DMH 281	Single-head pump / Double-head pump	1.3 l DHG 68
DMH 283	Single-head pump	3.5 l DHG 68
DMH 283	Double-head pump	4.5 l DHG 68
DMH 285	Single-head pump	5.5 l DHG 68
DMH 285	Double-head pump	7.5 l DHG 68
DMH 286	Single-head pump	5.5 l DHG 68
DMH 286	Double-head pump	7.5 l DHG 68
DMH 287	Single-head pump	5.5 l DHG 68
DMH 287	Double-head pump	7.5 l DHG 68
DMH 288	Single-head pump	3.5 l DHG 68
DMH 288	Double-head pump	4.5 l DHG 68

8.5 Checking the oil level

Rod length of oil dipstick:
- DMH 280-281: 27 mm.
- DMH 283-288: 35 mm.

Immersion depth up to the mark: approx. 5 mm.
The letters in brackets refer to the figure in section Oil change.

1. Switch off the pump.
2. Open the oil-filling screw (F) and check the oil level with the dipstick.
3. Add oil if necessary.
4. Refit the oil-filling screw (F).

Related information

8.4 Oil change

8.6 Cleaning the suction and discharge valves

WARNING
Chemical hazard
Death or serious personal injury
- Observe the safety data sheets and safety instructions of the chemical manufacturer when handling chemicals.
- Wear personal protective equipment when working on the dosing head, connections or lines.
- Collect and dispose of all chemicals in a way that is not harmful to humans, animals or the environment.

! Insert the O-rings correctly into the appropriate groove. Observe the flow direction.

DN 4 valve

- Screwed connection 3/8"
- Stainless steel
- Spring-loaded.

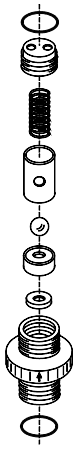

TM036871

Stainless steel DN 4 valve, spring-loaded

DN 8 valve

- Screwed connection 5/8"
- Stainless steel
- Spring-loaded.

TM036468

Stainless-steel DN 8 valve, spring-loaded

DN 20 valve

- Screwed connection 1 1/4"
- Stainless steel
- Spring-loaded (optional).

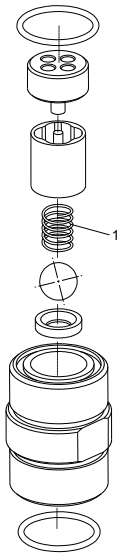

TM077799

Stainless-steel DN 20 valve

Pos.	Description
1	Optional spring (DMH 283, DMH 285)

1. Unscrew the valve.
2. Unscrew the screw parts and valve set using round pliers.
3. Dismantle the inner parts (seat, O-ring, balls, ball cages and spring, if present).
4. Clean all parts. Replace faulty parts by new ones.
5. Re-assemble the valve.
6. Replace the O-rings by new ones.
7. Refit the valve.

8.7 Dosing head with single diaphragm (no diaphragm leakage detection)

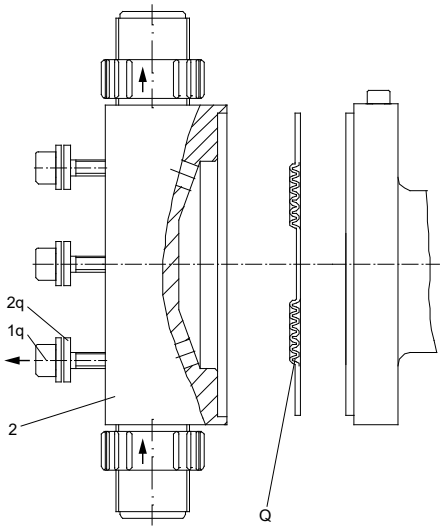

TM036473

Pos.	Component
1q	Dosing head screw
2q	Washer
2	Dosing head
Q	Diaphragm

8.7.1 Draining the oil

Install a new flat gasket (1b) every time you change the oil.

The numbers in brackets refer to the figure in section Oil change.

1. Unscrew the locking screw (B) and collect the oil in a container.
2. Screw the locking screw (B) and the new gasket (1b) back in and tighten them securely.

Related information

8.4 Oil change

8.7.2 Removing the dosing head

The numbers in brackets refer to the figures in section Dosing head with single diaphragm and section Dosing head with double diaphragm.

1. Close the suction line and the discharge line.
2. Loosen the connections of the suction and the discharge valve.
3. Loosen the six dosing head screws (1q with 2q).
4. Remove the dosing head (2).

Related information

8.7 Dosing head with single diaphragm (no diaphragm leakage detection)

8.8 Dosing head with double diaphragm

8.7.3 Replacing a single diaphragm

The numbers in brackets refer to the figure in section Dosing head with single diaphragm.

1. Remove the diaphragm (Q).
2. Fit a new diaphragm (Q).

Related information

8.7 Dosing head with single diaphragm (no diaphragm leakage detection)

8.7.4 Assembling the dosing head

The numbers in brackets refer to the figure in section Dosing head with single diaphragm and section Dosing head with double diaphragm.

1. Reassemble the dosing head.
2. Cross-tighten the dosing head screws (1q with 2q) using a torque wrench.
   See section Torques for tightening the dosing head.

Related information

8.2 Torques for tightening the dosing head screws

8.7 Dosing head with single diaphragm (no diaphragm leakage detection)

8.8 Dosing head with double diaphragm

8.7.5 Refilling the pump housing with oil

Install a new gasket (1b) every time you change the oil.

The numbers in brackets refer to the figure in section Oil change.

1. Check that the locking screw (B) is tightened.
2. Slacken and remove the oil-filling screw (F).
3. Set the stroke-length adjusting knob (L) to 0.
4. Slowly add the hydraulic oil through the oil-filling opening until the oil reaches the mark on the oil dipstick.
   See the table in section Oil change.
5. Wait 30 minutes.
6. Let the pump run for approx. 5 minutes with a stroke-length setting of 0 %.
7. Let the pump run for approx. 10 minutes with a stroke-length setting of 40 %.
8. Check the oil level.
   See section Checking the oil level.

Related information

8.4 Oil change

8.5 Checking the oil level

8.8 Dosing head with double diaphragm

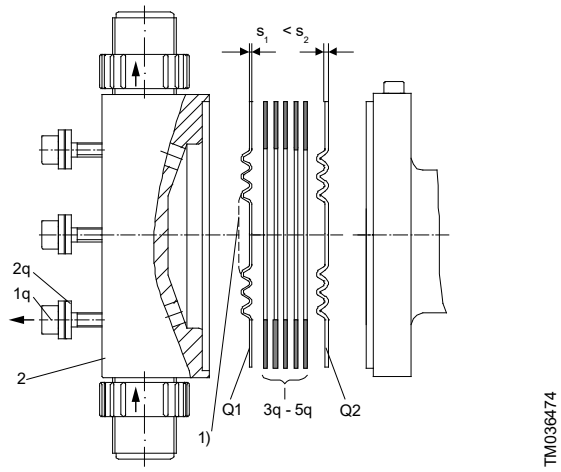

Sectional view of a double diaphragm

1) The shape of the diaphragm varies depending on the pump type.

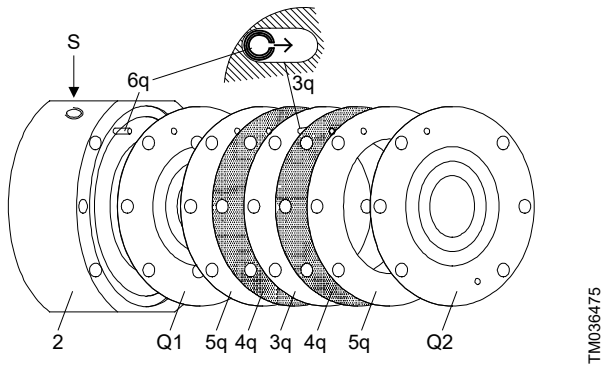

Exploded view of a double diaphragm, dosing-head side

Pos.	Component
S	Contact pressure gauge (installation position)
Q1	Diaphragm on dosing head side
Q2	Diaphragm on pump housing side
2	Dosing head
1q	Dosing head screw
2q	Washer
3q	Intermediate disk
4q	Sealing rings
5q	Covering rings
6q	Clamping sleeves

8.8.1 Draining the oil

Install a new flat gasket (1b) every time you change the oil.

The numbers in brackets refer to the figure in section Oil change.

1. Unscrew the locking screw (B) and collect the oil in a container.

2. Screw the locking screw (B) and the new gasket (1b) back in and tighten them securely.

Related information

8.4 Oil change

8.8.2 Removing the dosing head

The numbers in brackets refer to the figures in section Dosing head with single diaphragm and section Dosing head with double diaphragm.

1. Close the suction line and the discharge line.
2. Loosen the connections of the suction and the discharge valve.
3. Loosen the six dosing head screws (1q with 2q).
4. Remove the dosing head (2).

Related information

8.7 Dosing head with single diaphragm (no diaphragm leakage detection)

8.8 Dosing head with double diaphragm

8.8.3 Replacing a double diaphragm

The paraffin oil between the diaphragms (Q1 and Q2) is connected via the clamping sleeves (6q) to the contact pressure gauge (S) in order to fill and activate the diaphragm leakage detection. The oil can pass between the diaphragms through the slits in the clamping sleeves and the slits in the intermediate disk.

The clamping sleeves (6q) must be installed in such a way that the slits in the clamping sleeve face the slits in the intermediate disk (3q).

The numbers in brackets refer to the figures in section Dosing head with double diaphragm.

1. Clean the intermediate disk (3q), the sealing rings (4q) and the covering rings (5q).
   If the diaphragm is broken, replace the parts by new ones.
2. Carefully remove both clamping sleeves (6q) using pliers.
   If the diaphragm is broken, replace the parts by new ones.
3. Measure the outer wall thickness of the new diaphragms (Q1 and Q2): $s_1 < s_2$.
4. Fit the thinner diaphragm (Q1) on the dosing head side and the thicker diaphragm (Q2) on the pump housing side (oil side).
5. Fit the intermediate disk (3q), the sealing rings (4q) and the covering rings (5q) in correct order.
   Use the clamping sleeves (6q) for centering.

Related information

8.8 Dosing head with double diaphragm

8.8.4 Assembling the dosing head

The numbers in brackets refer to the figure in section Dosing head with single diaphragm and section Dosing head with double diaphragm.

1. Reassemble the dosing head.
2. Cross-tighten the dosing head screws (1q with 2q) using a torque wrench.
   See section Torques for tightening the dosing head.

Related information

8.2 Torques for tightening the dosing head screws

8.7 Dosing head with single diaphragm (no diaphragm leakage detection)

8.8 Dosing head with double diaphragm

8.8.5 Filling the double diaphragm with separating agent

In case of diaphragm leakage, clean the non-return ball valve before filling the diaphragm with separating agent.

Clean the non-return ball valve only in case of diaphragm leakage.

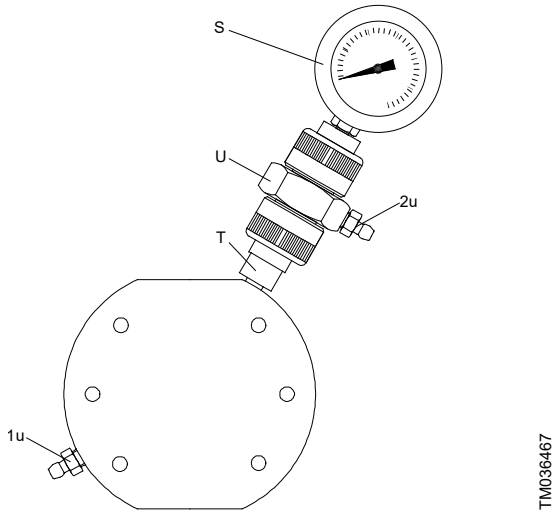

Pos.	Component
S	Contact pressure gauge
T	Non-return ball valve
U	Connection piece
1u	Filling screw
2u	De-aeration screw

After replacing the diaphragm, refill the separating agent between the diaphragms.

1. Set the stroke-length adjusting knob of the pump to 0 %.
2. Open the filling screw (1u) and the de-aeration screw (2u) by one turn.
3. Connect the filling hose to the nipple of the filling screw (1u) and inject the correct amount of paraffin oil using the dosing syringe.
   See the list in section Separating agent for double diaphragm.
4. Close the filling screw (1u), but leave the de-aeration screw (2u) open.
5. Start the pump with system counterpressure and a stroke-length setting of 40 %.
6. Close the de-aeration screw (2u) when the separating agent stops flowing after 5-10 minutes.
   Do not tighten the screw until the oil has stopped flowing.

After a few hours of operation, especially if the pressure on the pressure gauge rises, de-aerate the double diaphragm again.

Related information

8.8.6 Separating agent for double diaphragm

8.8.6 Separating agent for double diaphragm

Paraffin oil quantity for dosing pumps with double diaphragm

Pump model	Filling quantity per dosing head [ml]
DMH 280	3
DMH 281	3
DMH 283	4
DMH 285	4
DMH 286	6
DMH 287	4
DMH 288	4

For product numbers of separating agents for double diaphragms, see the Service Kit Catalogue on www.grundfos.com.

8.8.7 Refilling the pump housing with oil

Install a new gasket (1b) every time you change the oil.

The numbers in brackets refer to the figure in section Oil change.

1. Check that the locking screw (B) is tightened.
2. Slacken and remove the oil-filling screw (F).
3. Set the stroke-length adjusting knob (L) to 0.
4. Slowly add the hydraulic oil through the oil-filling opening until the oil reaches the mark on the oil dipstick.
   See the table in section Oil change.
5. Wait 30 minutes.
6. Let the pump run for approx. 5 minutes with a stroke-length setting of 0 %.
7. Let the pump run for approx. 10 minutes with a stroke-length setting of 40 %.
8. Check the oil level.
   See section Checking the oil level.

Related information

8.4 Oil change

8.5 Checking the oil level

8.8.8 Cleaning the non-return ball valve

Clean the non-return ball valve only in case of diaphragm leakage.

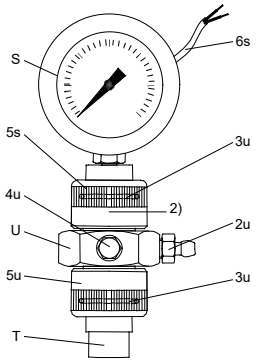

Contact pressure gauge

Pos.	Component
S	Contact pressure gauge
5s	Union nut
6s	Contact output
T	Non-return ball valve
U	Connection piece
2u	De-aeration screw
3u	O-rings
4u	Connection for earthing cable
5u	Union nut
2)	For dosing heads with a double diaphragm with no contact pressure gauge (no diaphragm leakage detection), a locking unit is fitted instead of the contact pressure gauge.

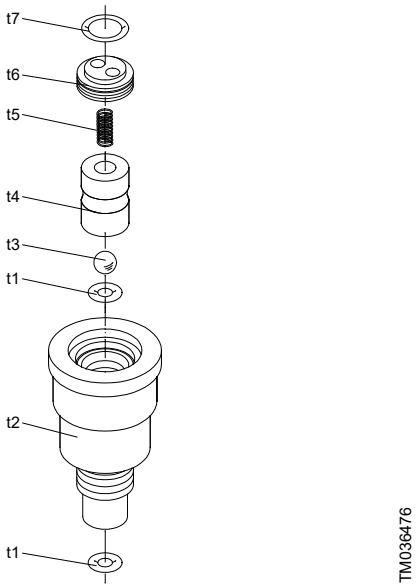

Non-return ball valve

Pos.	Component
t1	O-ring
t2	Valve body
t3	Ball
t4	Spring sheath
t5	Pressure spring
t6	Screw part
t7	O-ring

1. Remove the non-return ball valve and the contact pressure gauge.
   a. For explosion-proof pumps and pressure gauges, unscrew the earthing cable (4u).
   b. Hold the connection piece (U) in place with a screwdriver and unscrew the union nut (5u).
   c. Unscrew the non-return ball valve (T) from the dosing head.
2. Clean the non-return ball valve (T).
   a. Unscrew the screw part (t6) using round pliers.
   b. Clean all parts. Replace faulty parts by new ones.
3. Reassemble the non-return ball valve (T).
   Tighten the non-return ball valve by hand.
4. Screw the contact pressure gauge (S) and the connection piece (U) back on.
   Tighten the connection piece by hand.
5. For explosion-proof pumps and pressure gauges, screw the earthing cable (4u) back on.

8.9 Replacing the power cable

The power cable must be replaced by an authorized Grundfos Service partner.

9. Shutdown

9.1 Preparations for shutdown

WARNING
Chemical hazard
Death or serious personal injury

- Wear personal protective equipment when working on the dosing head, connections or lines.
- Observe the safety data sheets and safety instructions of the chemical manufacturer when handling chemicals.
- The pump housing must only be opened by persons authorized by Grundfos.
- Collect and dispose of all chemicals in a way that is not harmful to humans, animals or the environment.

Rinse the dosing head with water, if your dosing medium is compatible with water.

9.2 Taking the product out of operation

1. Switch off the pump.
   a. Disconnect the pump from the power supply.
   b. Depressurise the system.
   c. Collect the returning dosing medium safely.
   d. Carefully remove all lines.
   e. Uninstall the pump.
2. Clean the pump.
   a. Rinse all parts that have come into contact with the dosing medium.
      Parts in contact with the dosing medium: lines, valves, dosing head, diaphragm.
   b. Remove all traces of chemicals from the pump housing.
   c. Dry all parts of the pump.
3. Store the pump.
   a. Change the valves and the diaphragm, if necessary.
      See section Service.

Related information

8. Service

10. Repairs and return

WARNING
Chemical hazard
Death or serious personal injury

- The pump housing must only be opened by persons authorized by Grundfos.
- Repairs must only be carried out by authorised and qualified persons.
- Switch off the power supply before carrying out maintenance work and repairs.

Consult your Grundfos service partner. If required, send the pump to Grundfos, together with the safety declaration.

Find the safety declaration at the end of this manual. Print out the safety declaration, fill it in and attach it to the pump.

Prior to dispatch, the pump must be cleaned and the oil must be drained.

If dosing liquid has possibly entered the pump housing, state that explicitly in the safety declaration.

If the pump has been used for a hazardous or toxic dosing medium, it is classified as contaminated.

If the above requirements are not met, Grundfos may refuse to accept delivery of the pump. The shipping costs will be charged to the sender.

11. Fault finding

WARNING
Chemical hazard
Death or serious personal injury

- Troubleshooting work must only be carried out by qualified persons.
- Wear personal protective equipment when working on the dosing head, connections or lines.
- Observe the safety data sheets and safety instructions of the chemical manufacturer when handling chemicals.
- The pump housing must only be opened by persons authorized by Grundfos.

The components described below are shown in the figures in section Product description.

Related information

3.1 Product description

11.1 No dosing flow, pump runs without noise

There is no dosing flow even at a low counterpressure. The pump is running silently.

Cause	Remedy
There is no motor sound or vibrations. The fan is not rotating. The motor is not running.	• Connect the motor to the power supply. • Replace the motor.
When the oil-filling screw is removed, a calm oil surface can be observed. There is no sloshing. The motor is running, but the eccentric shaft is not rotating and the piston is not moving. The spiral pin of the motor shaft is broken.	1. Dismantle the motor and the eccentric shaft. 2. Replace the damaged parts.
The pressure-relief valve does not react if the suction line is closed. There is not enough oil in the pump. Air enters the piston flange through the control holes.	1. Refill oil. See section Refilling the pump housing with oil and section Oil change.
There is no dosing flow on the discharge side. The dosing head is not filled. The suction line is empty. The dosing tank is empty.	1. De-earate the dosing head. 2. Fill or exchange the dosing tank.

Related information

8.4 Oil change

8.7.5 Refilling the pump housing with oil

11.2 No dosing flow, pump runs with noise

There is no dosing flow even at low counterpressure. The pump is running noisily.

The pressure-relief valve reacts independently of the dosing flow adjustment (10-100 %).

When the de-aeration screw of the dosing head is opened, the dosing medium sprays out.

Cause	Remedy
The valve on the discharge side is closed.	• Open the valve on the discharge side.
The counterpressure is higher than the pressure set on the pressure-relief valve.	• Set the pressure on the pressure-relief valve higher. Only set the pressure higher if the pump is designed for a higher pressure.

Cause	Remedy
	Do not block the pressure-relief valve.
The discharge valve is installed in the opposite direction to the flow.	• Install the discharge valve correctly. Observe the arrow on the valve.

11.3 No dosing flow, pump runs with noise

There is no dosing flow even at low counterpressure. The pump is running noisily.

The diaphragm protection system (AMS) responds.

The pressure-relief valve reacts independently of the dosing flow adjustment (10-100 %).

When the de-aeration screw of the dosing head is opened, no dosing medium sprays out.

Cause	Remedy
The valve on the discharge side is closed.	• Open the valve on the discharge side.
The suction filter is obstructed.	• Clean the suction filter. • Replace the filter if necessary.
The suction valve does not open.	• Dismantle and check the suction valve.
The spring in the suction valve is too strong.	• Use the suitable spring. • Use a double ball valve for checking.
The suction valve is installed in the opposite direction to the flow.	• Install the suction valve correctly. Observe the arrow on the valve.

11.4 No dosing flow, pump runs with noise

There is no dosing flow even at low counterpressure. The pump is running noisily.

The diaphragm protection system (AMS) responds.

The pressure-relief valve reacts at a dosing flow of 100 %. When the dosing flow is reduced by 10-20%, the pressure-relief valve doesn't react anymore.

Cause	Remedy
The dosing head is not completely de-aerated.	• Fill the dosing head completely.
The pump is cavitating. Possible reasons: • The viscosity of the dosing medium is too high. • The dosing medium is degassing. • The suction lift is too high. • The system on the suction side of the pump is incorrectly designed.	• Use a gear with a low stroke number. • Use valves with a bigger nominal width. • Provide positive inlet pressure.
The dosing diaphragm is leaky. There is not enough oil in the pump housing.	• Clean and grease all parts well. Use the suitable oil. See section Oil change. • Install a new diaphragm.

Related information

8.4 Oil change

11.5 The pump is not dosing, the pressure-relief valve opens

Cause	Remedy
The discharge valve of the pump is blocked.	• Disassemble the discharge valve. • Clean the discharge valve.
The ball guide in the valve is worn due to the dosing of corrosive or abrasive media.	• Replace the discharge valve if necessary.

11.6 Dosing flow too low

Cause	Remedy
The suction and discharge valves are leaky or soiled. The dosing medium flows back. The pump takes in less.	• Clean the suction and discharge valves. • Replace the suction and discharge valves if necessary.
The piston lip seal is worn after a long period of operation.	• Replace the grooved ring.
The clearance between the piston and the slide valve is too big. The stroke frequency of the pump is too low.	• Replace the piston and the slide valves. • Use a different oil with higher viscosity. Mainly for operation with frequency converter or high counterpressure.
The O-rings on the degassing valve are damaged.	• Replace the O-rings. If the O-rings are installed incorrectly or if the degassing valve is adjusted during operation, the O-rings may be damaged.
The degassing valve is releasing too much oil.	• Adjust the degassing valve correctly. • Replace the degassing valve if necessary.
Air has accumulated in the piston flange. The air cannot be evacuated. The degassing valves are not operating.	• Check the setting of the degassing valve. • Replace the degassing valves if necessary.
The counterpressure has increased significantly. The pressure-relief valve is set too low.	• Readjust the zero point. • Correct the setting of the pressure-relief valve.

11.7 Dosing flow too high

Cause	Remedy
The counterpressure has dropped significantly.	• Readjust the zero point.
The inlet pressure in the suction line is higher than the counterpressure in the discharge line.	• Install a pressure-loading valve.
There is too much dynamic in the suction line.	• Install a pulsation damper at the suction side.

12. Dosing curves

The dosing curves in the appendix are trend curves. See appendix: Dosing curves.

They apply to:

- performance of single pump (the flow rate is doubled for the double pump)
- water as dosing medium
- zero point of pump Q_0 for specified pressure, see table below
- standard pump version.

Abbreviation	Description
Q	Dosing flow
Q_0	Zero point of the pump
h	Stroke length

13. Disposing of the product

This product or parts of it must be disposed of in an environmentally sound way.

1. Use the public or private waste collection service.
2. If this is not possible, contact the nearest Grundfos company or service workshop.

	The crossed-out wheelie bin symbol on a product means that it must be disposed of separately from household waste. When a product marked with this symbol reaches its end of life, take it to a collection point designated by the local waste disposal authorities. The separate collection and recycling of such products will help protect the environment and human health.

See also end-of-life information at *www.grundfos.com/product-recycling*.

1. Dosing curves

DMH 280

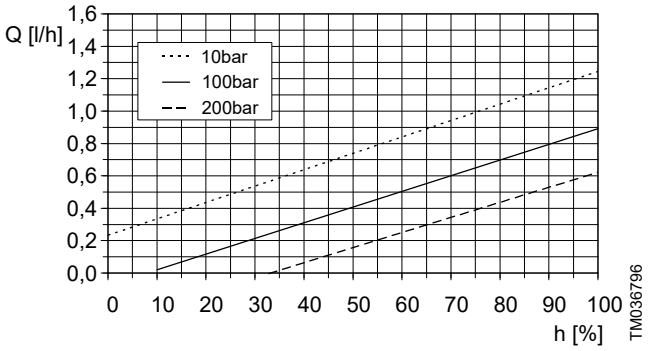

DMH 0,6-200 (50 Hz), Q_0 = 75 bar

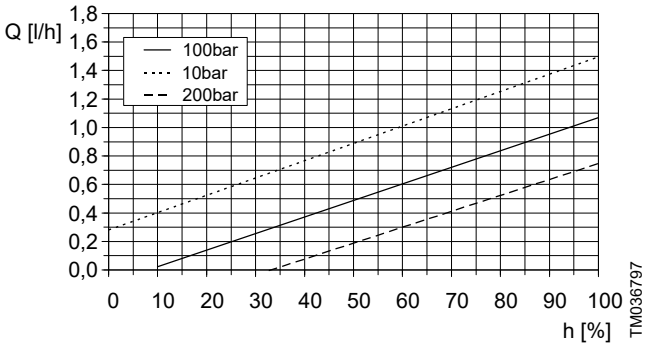

DMH 0,6-200 (60 Hz), Q_0 = 75 bar

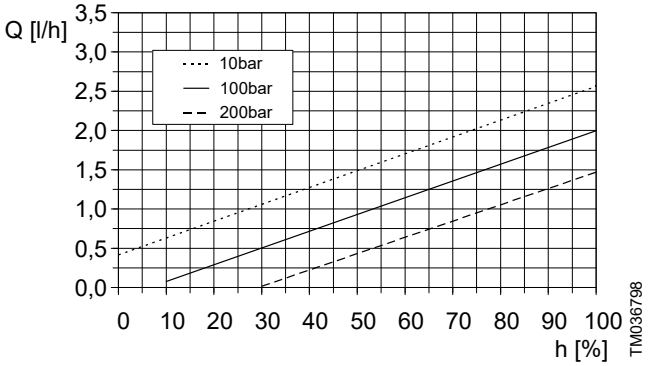

DMH 1,3-200 (50 Hz), Q_0 = 75 bar

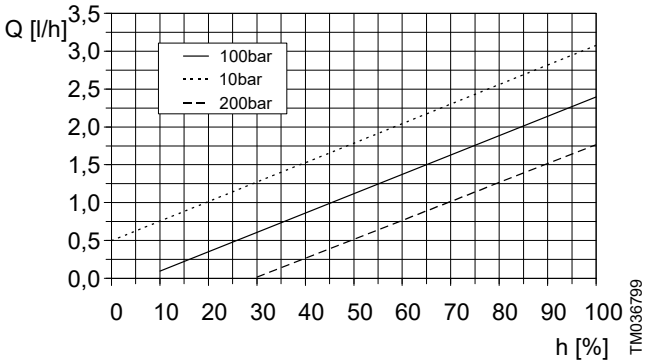

DMH 1,3-200 (60 Hz), Q_0 = 75 bar

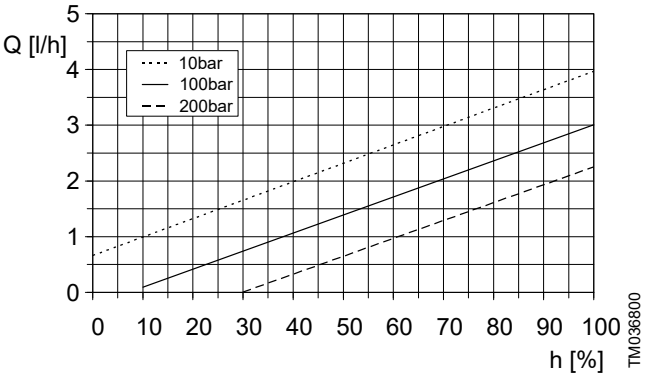

DMH 2,2-200 (50 Hz), Q_0 = 75 bar

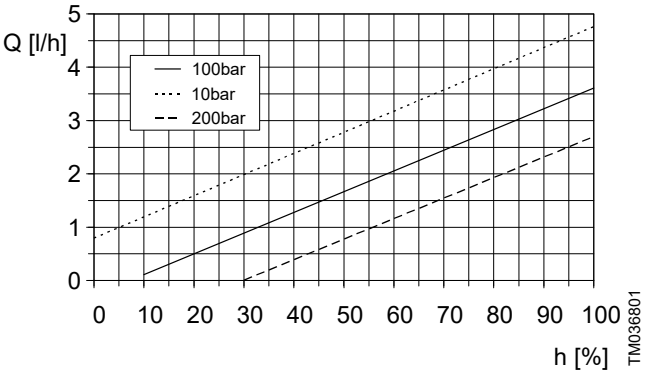

DMH 2,2-200 (60 Hz), Q_0 = 75 bar

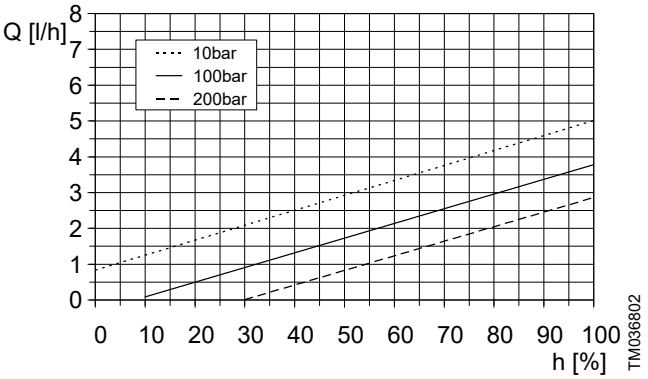

DMH 2,5-200 (50 Hz), Q_0 = 75 bar

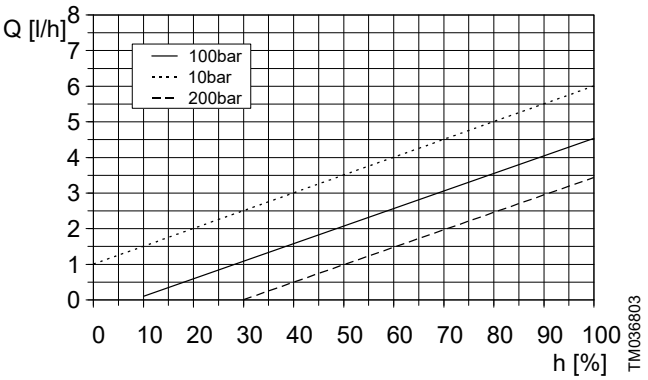

DMH 2,5-200 (60 Hz), Q_0 = 75 bar

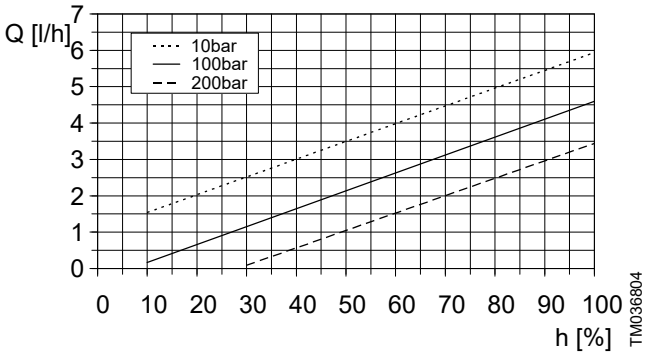

DMH 3,3-200 (50 Hz), Q_0 = 75 bar

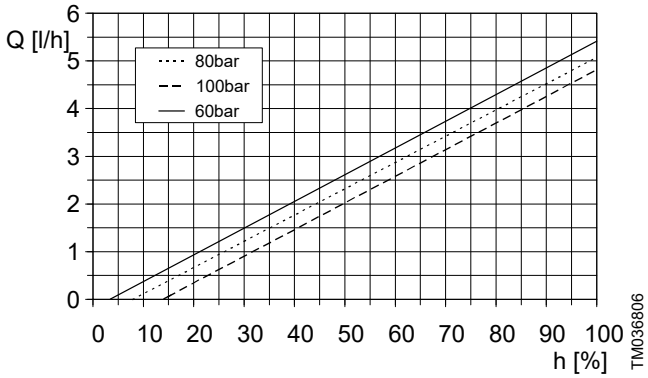

DMH 4,2-100 (60 Hz), Q_0 = 60 bar

DMH 281

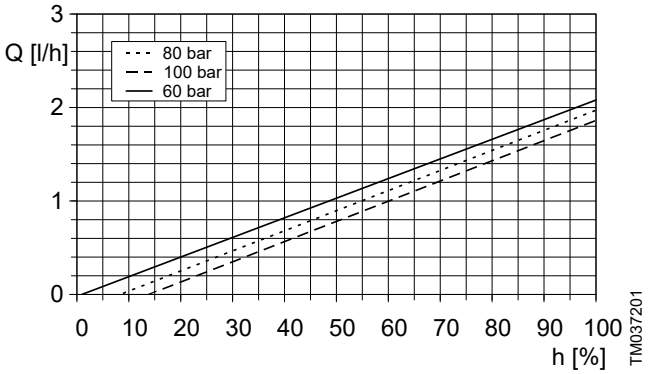

DMH 2-100 (50 Hz), Q_0 = 60 bar

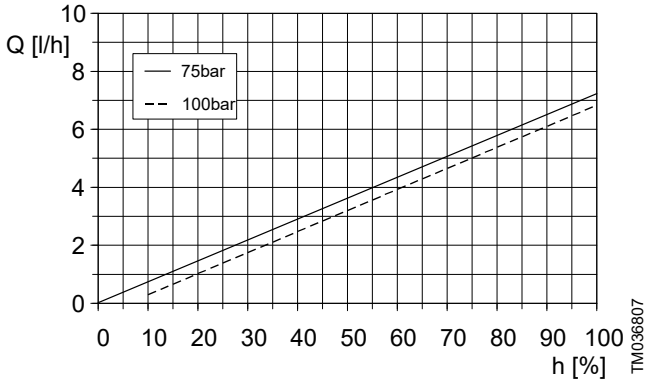

DMH 6,4-100 (50 Hz), Q_0 = 75 bar

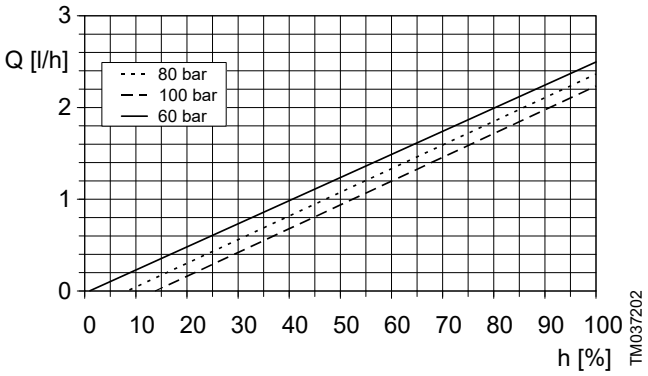

DMH 2-100 (60 Hz), Q_0 = 60 bar

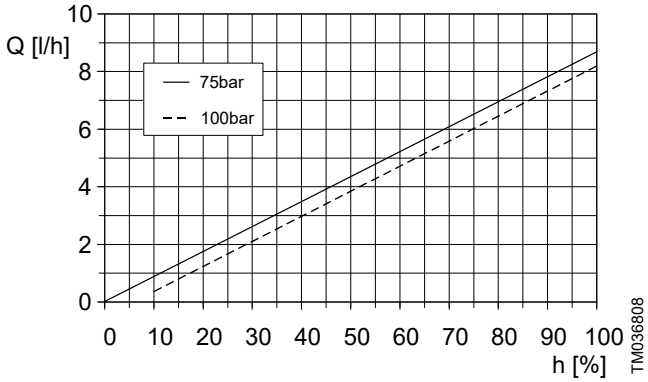

DMH 6,4-100 (60 Hz), Q_0 = 75 bar

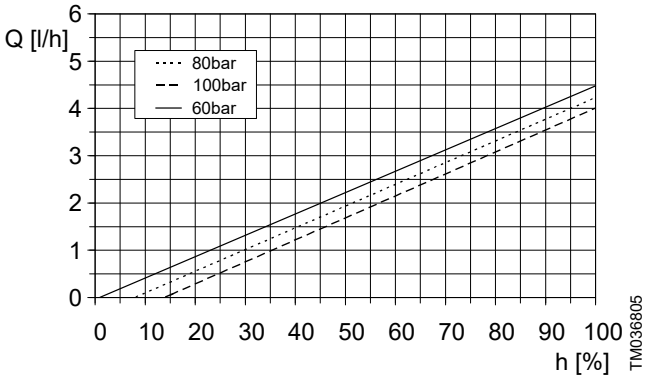

DMH 4,2-100 (50 Hz), Q_0 = 60 bar

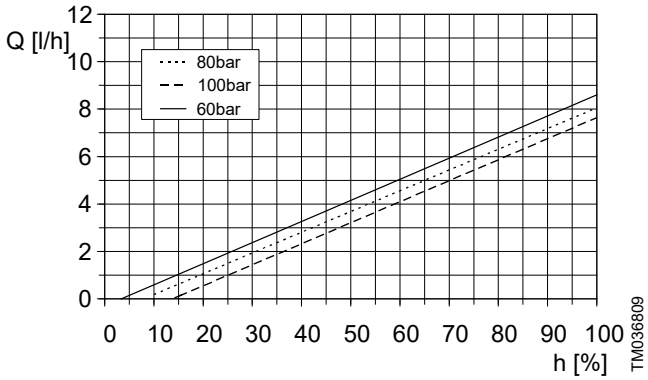

DMH 8-100 (50 Hz), Q_0 = 60 bar

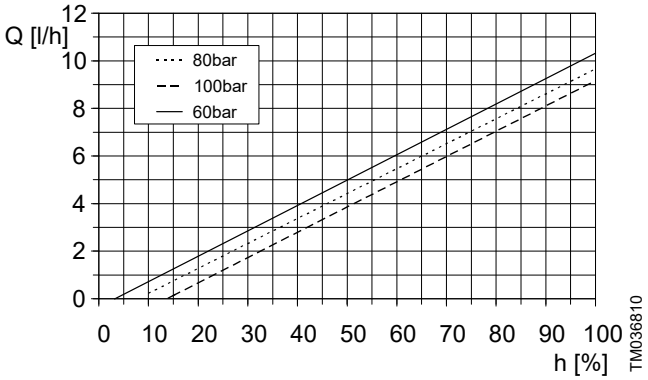

DMH 8-100 (60 Hz), Q_0 = 60 bar

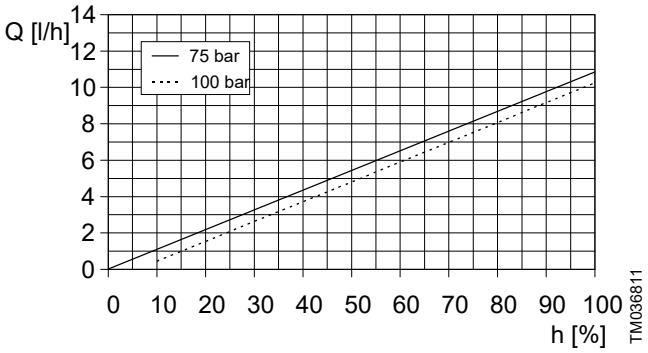

DMH 9,6-100 (50 Hz), Q_0 = 75 bar

DMH 283

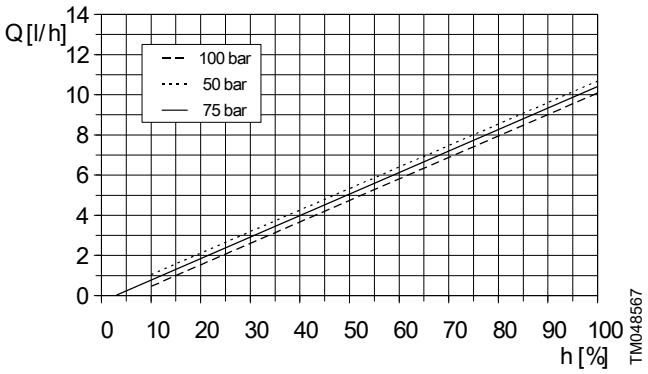

DMH 10-100 (50 Hz), Q_0 = 75 bar

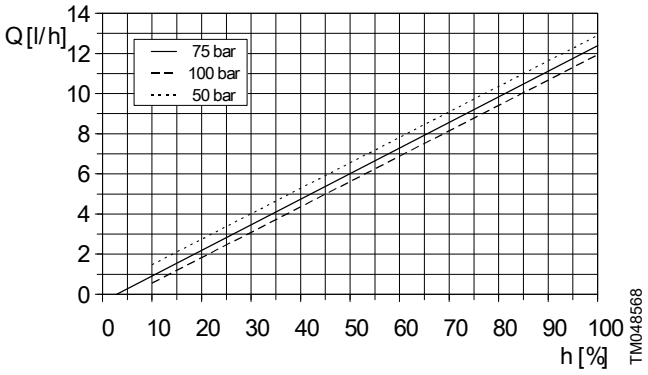

DMH 10-100 (60 Hz), Q_0 = 75 bar

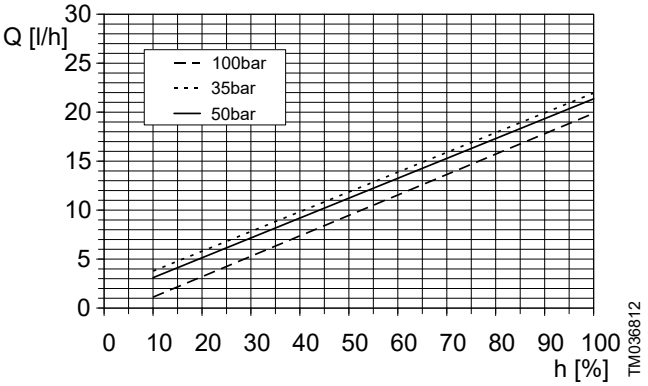

DMH 19-100 (50 Hz), Q_0 = 75 bar

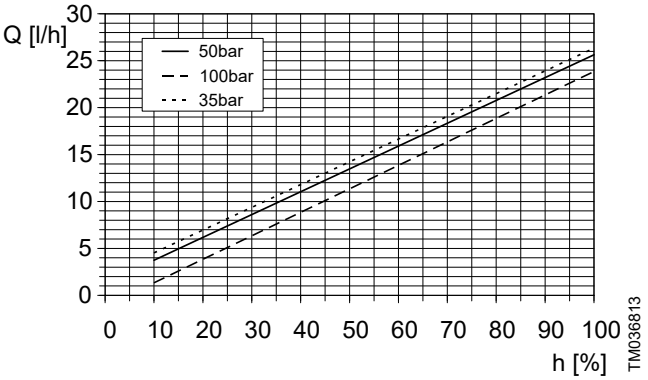

DMH 19-100 (60 Hz), Q_0 = 75 bar

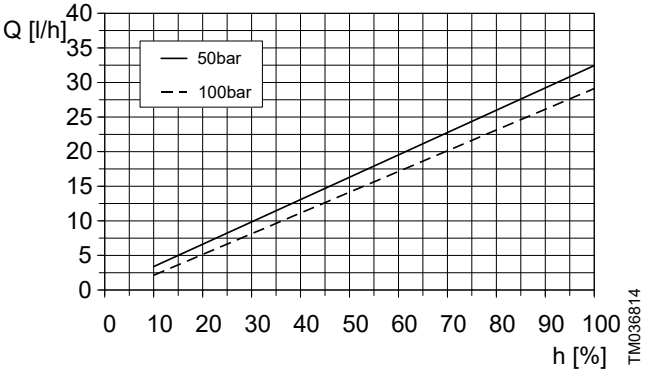

DMH 27-100 (50 Hz), Q_0 = 75 bar

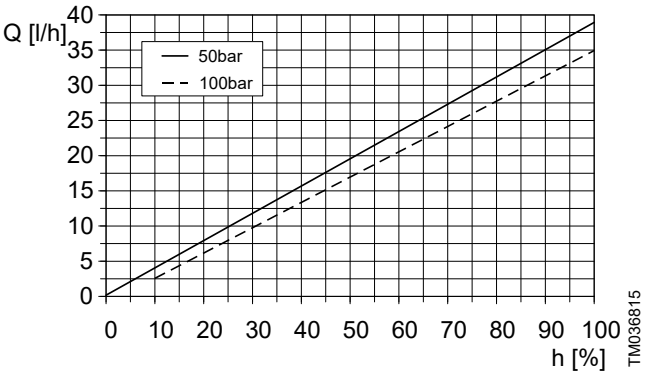

DMH 27-100 (60 Hz), Q_0 = 75 bar

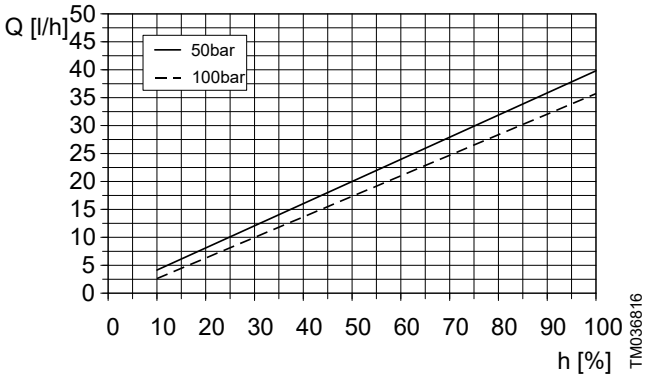

DMH 33-100 (50 Hz), Q_0 = 75 bar

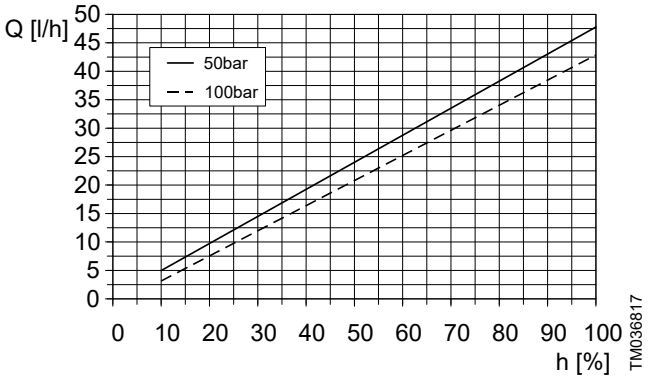

DMH 33-100 (60 Hz), Q_0 = 75 bar

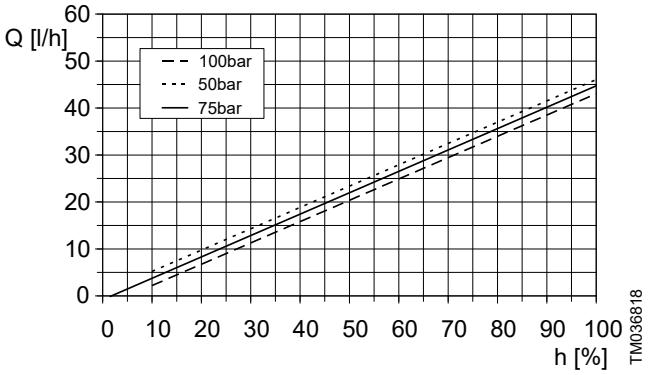

DMH 40-100 (50 Hz), Q_0 = 75 bar

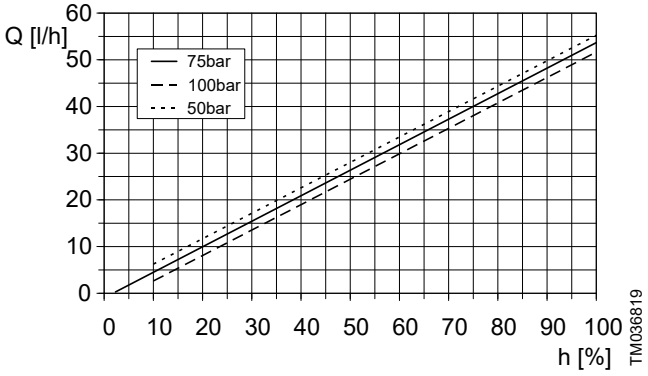

DMH 40-100 (60 Hz), Q_0 = 75 bar

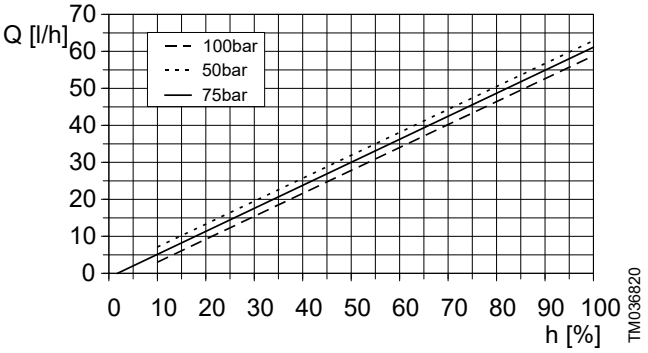

DMH 55-100 (50 Hz), Q_0 = 75 bar

DMH 285

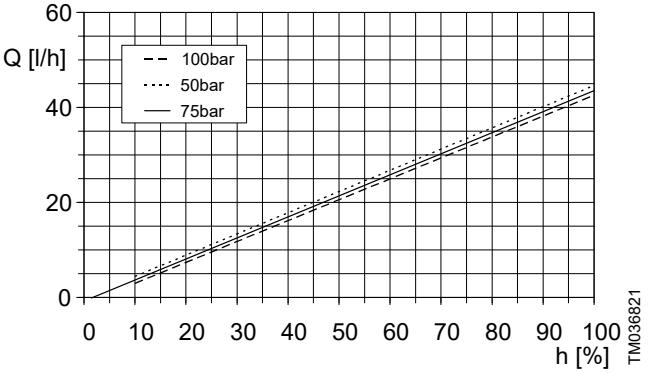

DMH 40-100 (50 Hz), Q_0 = 75 bar

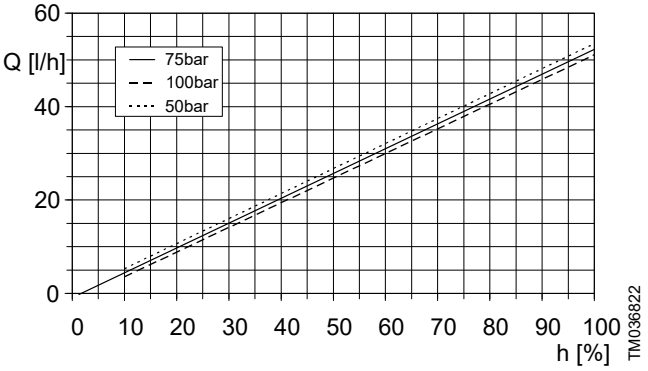

DMH 40-100 (60 Hz), Q_0 = 75 bar

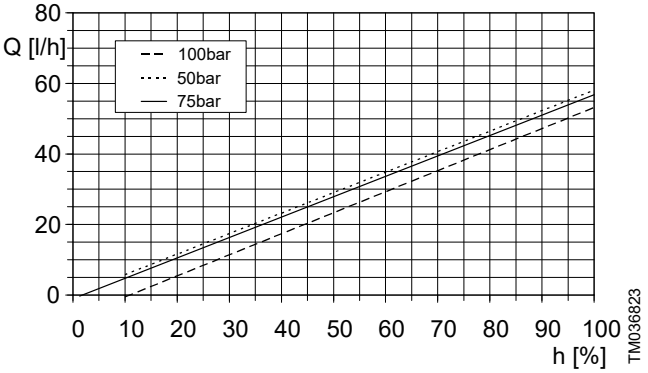

DMH 52-100 (50 Hz), Q_0 = 75 bar

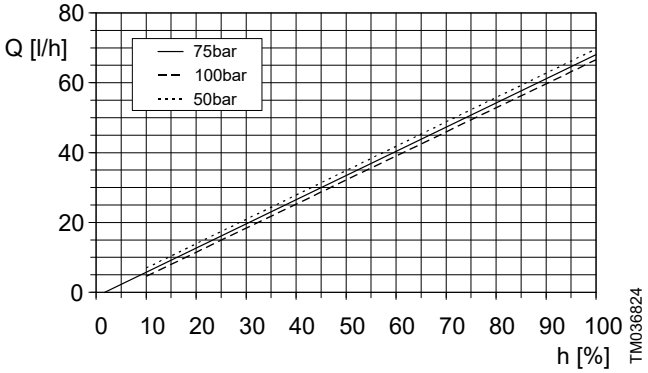

DMH 52-100 (60 Hz), Q_0 = 75 bar

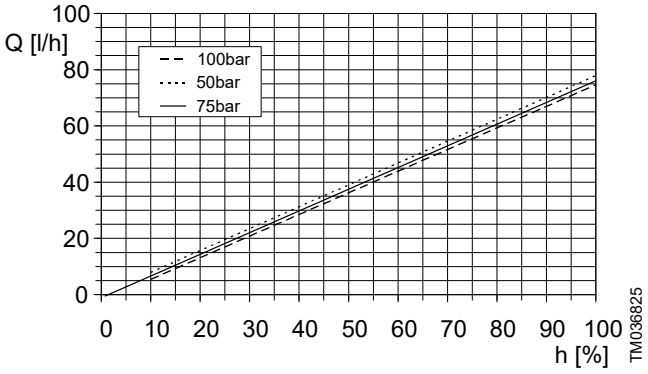

DMH 70-100 (50 Hz), Q_0 = 75 bar

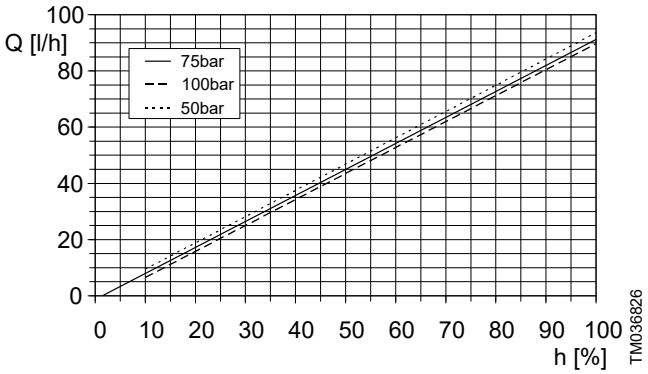

DMH 70-100 (60 Hz), Q_0 = 75 bar

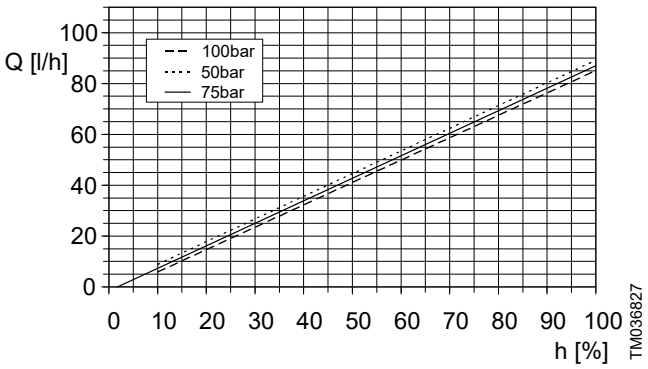

DMH 80-100 (50 Hz), Q_0 = 75 bar

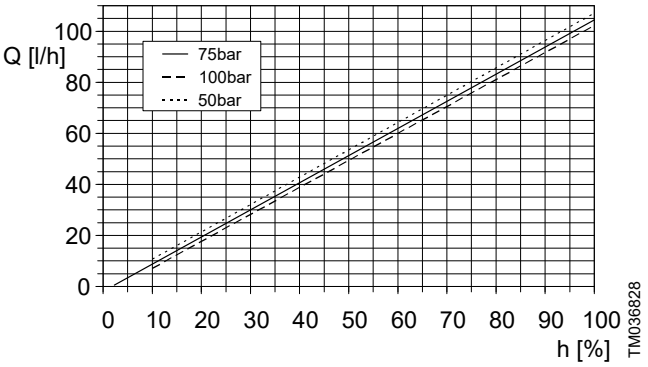

DMH 80-100 (60 Hz), Q_0 = 75 bar

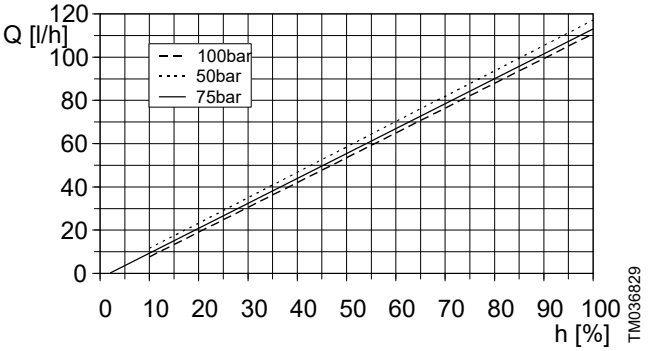

DMH 105-100 (50 Hz), Q_0 = 75 bar

DMH 286

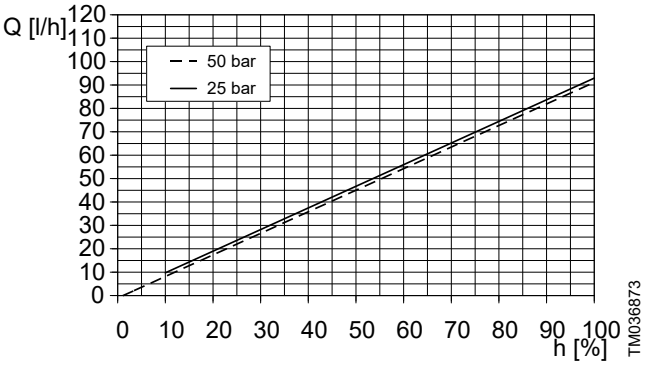

DMH 85-50 (50 Hz), Q_0 = 25 bar

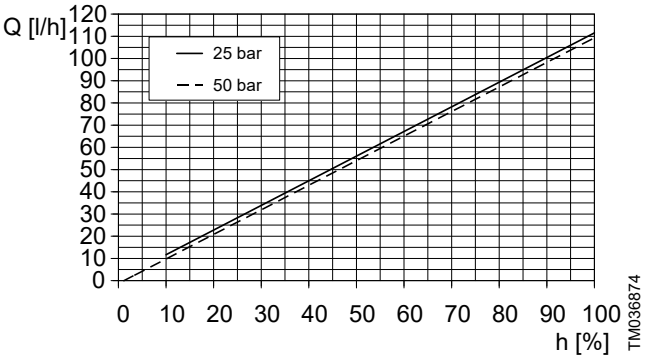

DMH 85-50 (60 Hz), Q_0 = 25 bar

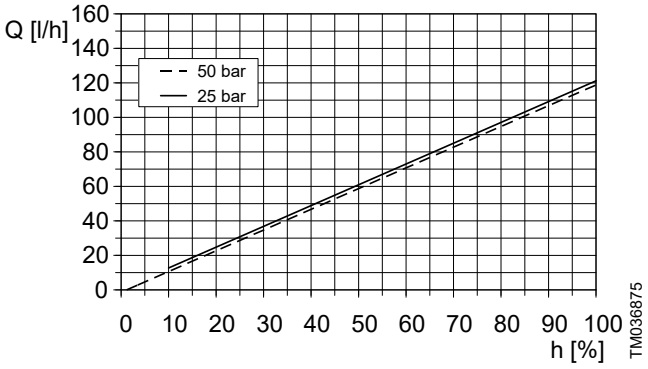

DMH 111-50 (50 Hz), Q_0 = 25 bar

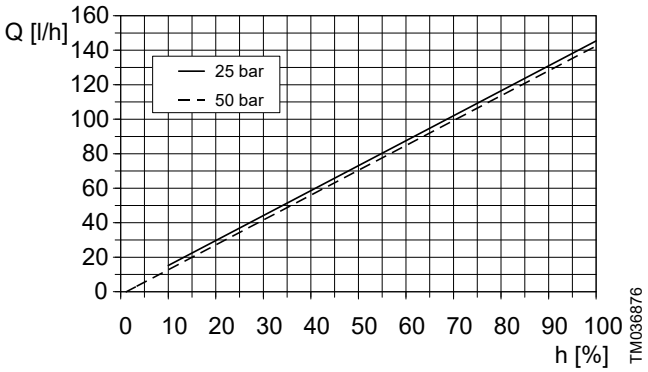

DMH 111-50 (60 Hz), Q_0 = 25 bar

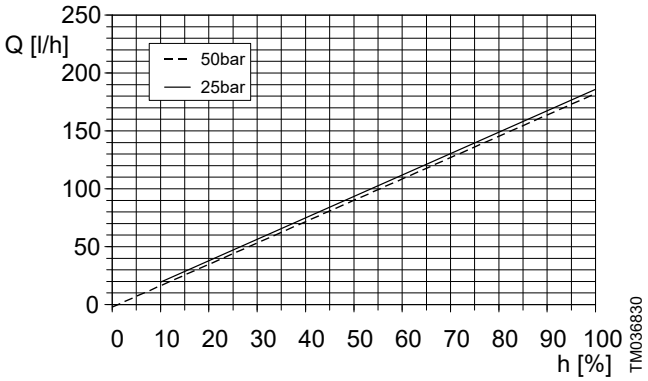

DMH 170-50 (50 Hz), Q_0 = 25 bar

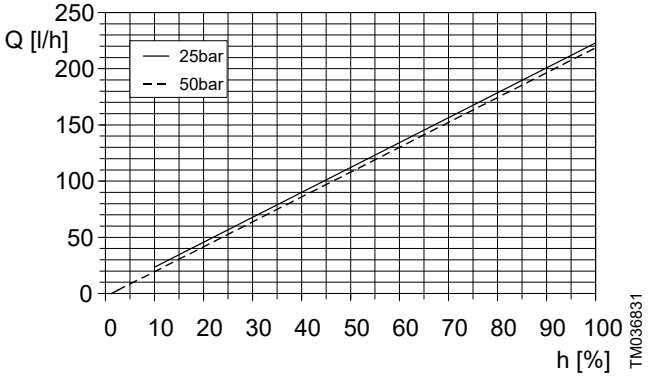

DMH 170-50 (60 Hz), Q_0 = 25 bar

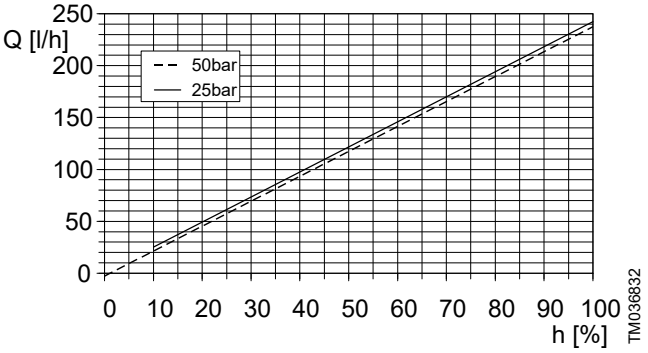

DMH 222-50 (50 Hz), Q_0 = 25 bar

DMH 287

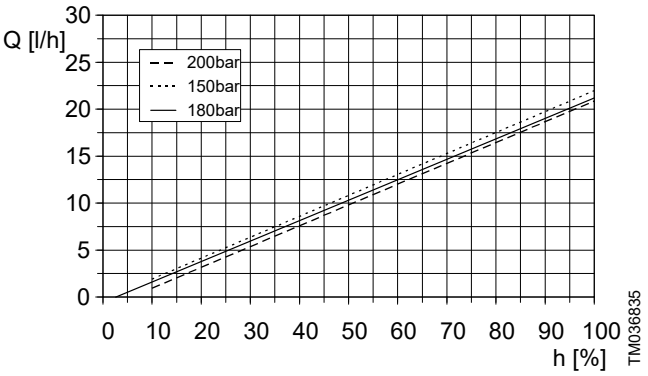

DMH 18-200 (50 Hz), Q_0 = 180 bar

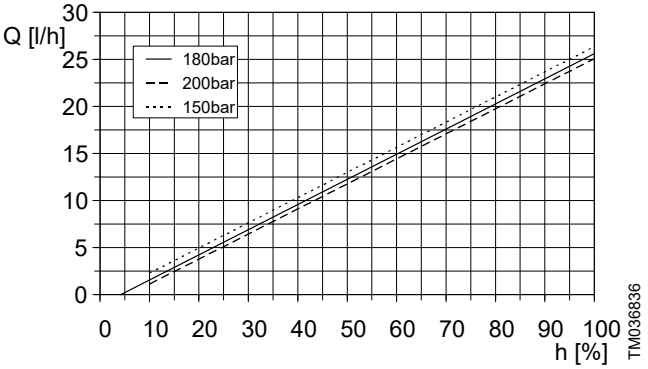

DMH 18-200 (60 Hz), Q_0 = 180 bar

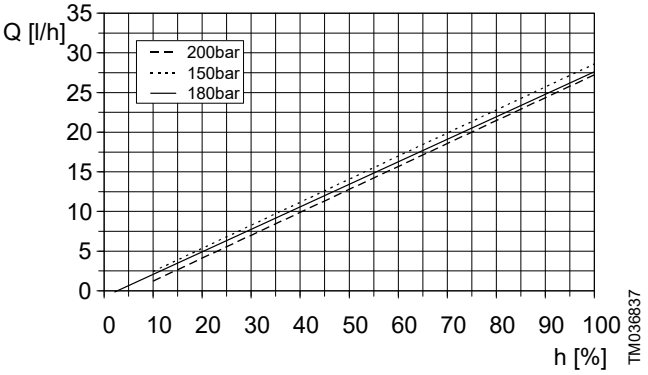

DMH 23-200 (50 Hz), Q_0 = 180 bar

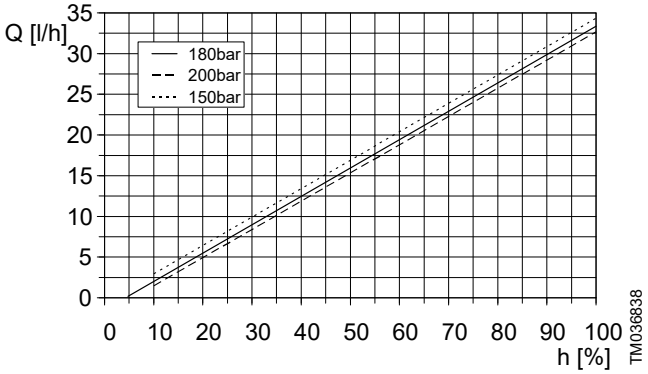

DMH 23-200 (60 Hz), Q_0 = 180 bar

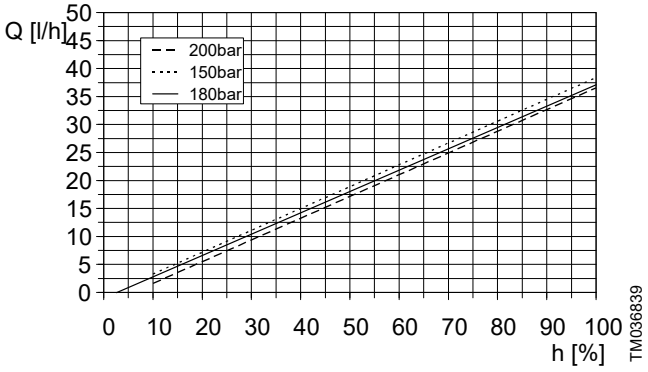

DMH 31-200 (50 Hz), Q_0 = 180 bar

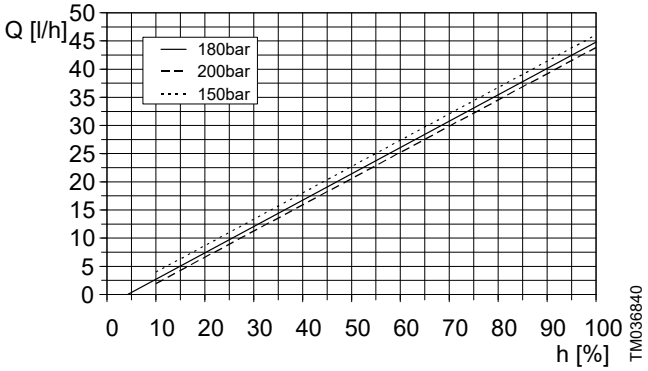

DMH 31-200 (60 Hz), Q_0 = 180 bar

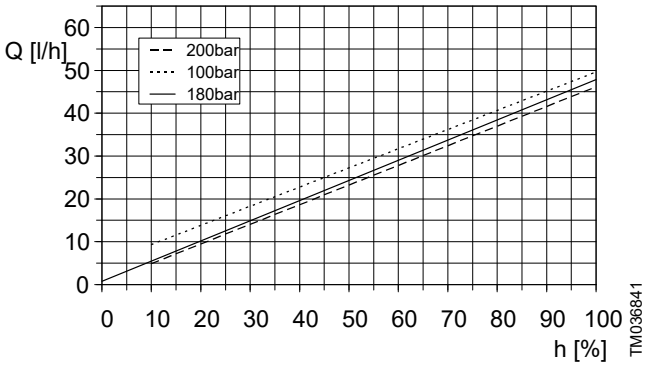

DMH 36-200 (50 Hz), Q_0 = 180 bar

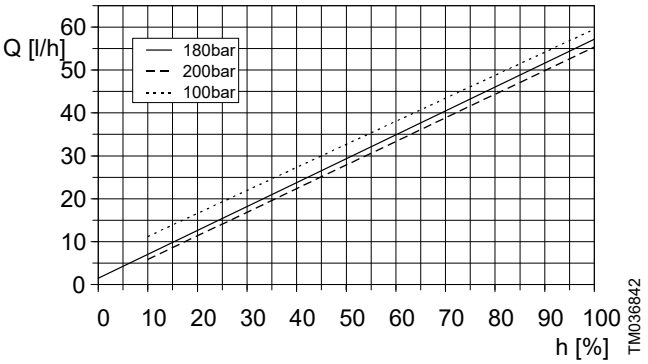

DMH 36-200 (60 Hz), Q_0 = 180 bar

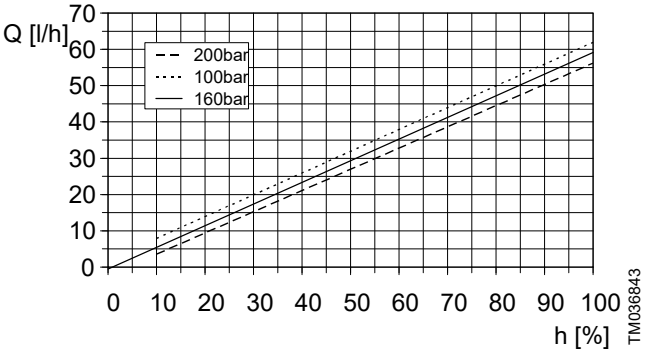

DMH 50-200 (50 Hz), Q_0 = 160 bar

DMH 288

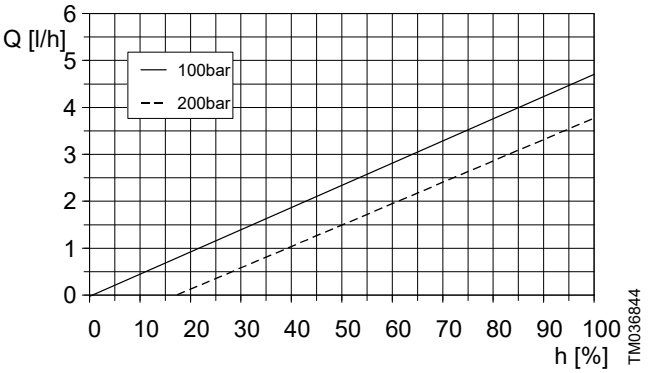

DMH 3-200 (50 Hz), Q_0 = 100 bar

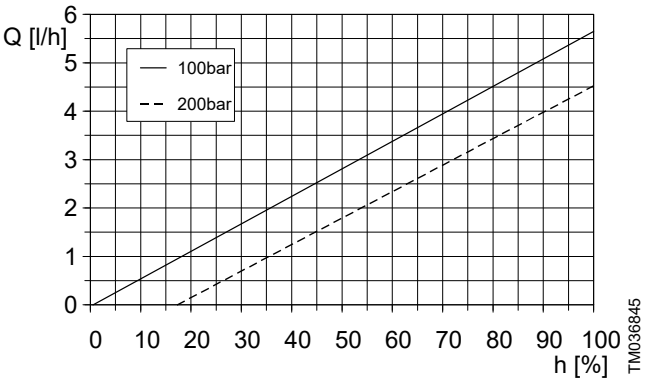

DMH 3-200 (60 Hz), Q_0 = 100 bar

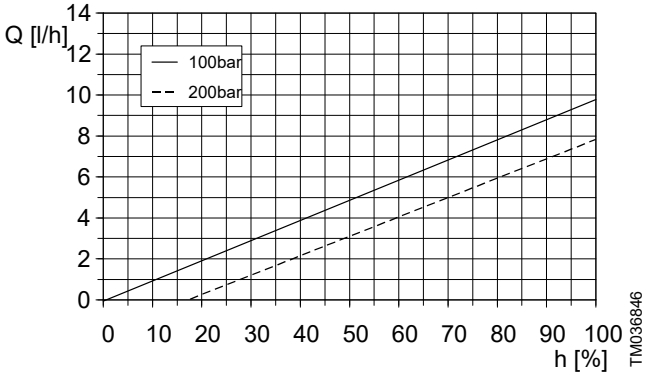

DMH 7,5-200 (50 Hz), Q_0 = 100 bar

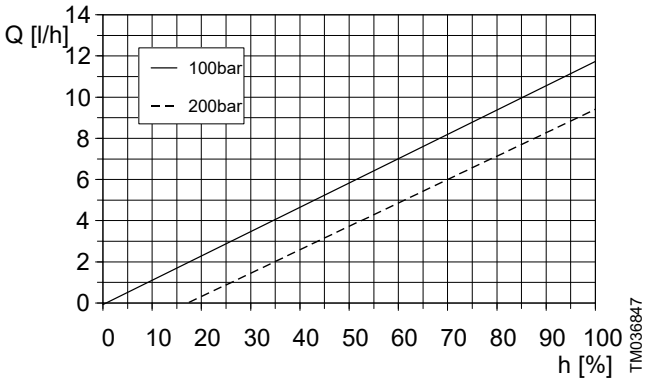

DMH 7,5-200 (60 Hz), Q_0 = 100 bar

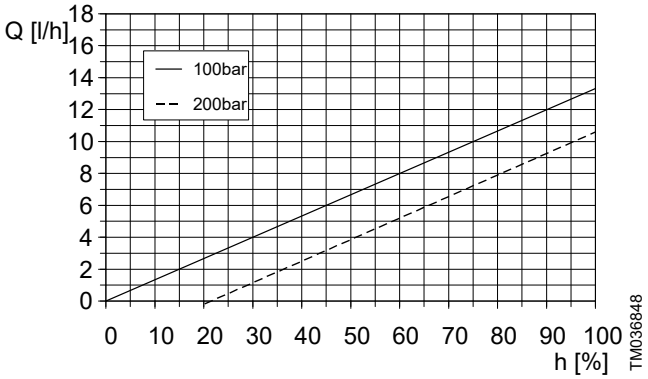

DMH 10-200 (50 Hz), Q_0 = 100 bar

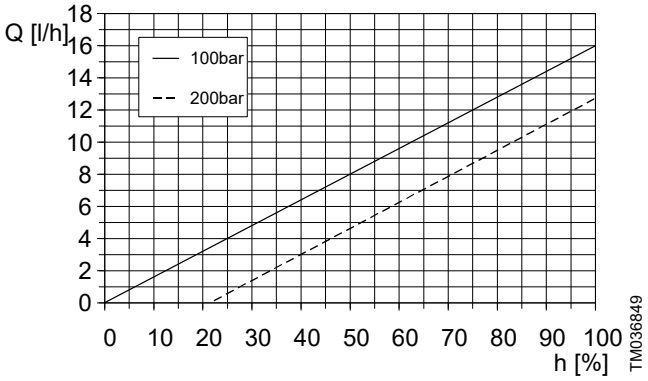

DMH 10-200 (60 Hz), Q_0 = 100 bar

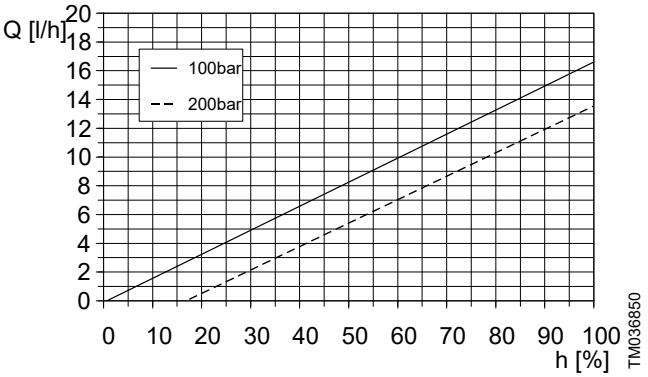

DMH 13-200 (50 Hz), Q_0 = 100 bar

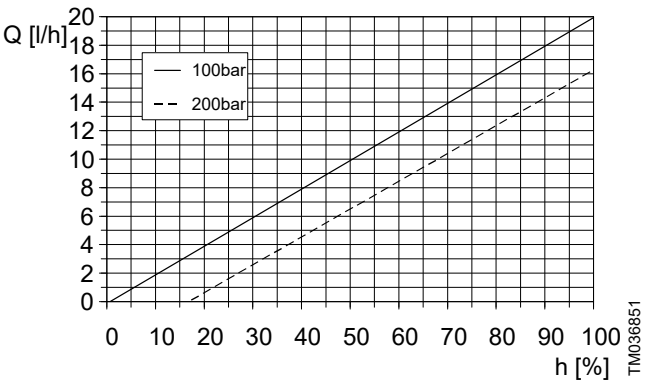

DMH 13-200 (60 Hz), Q_0 = 100 bar

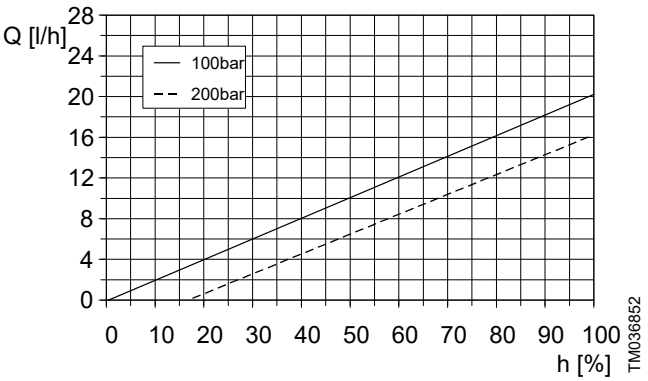

DMH 15-200 (50 Hz), Q_0 = 100 bar

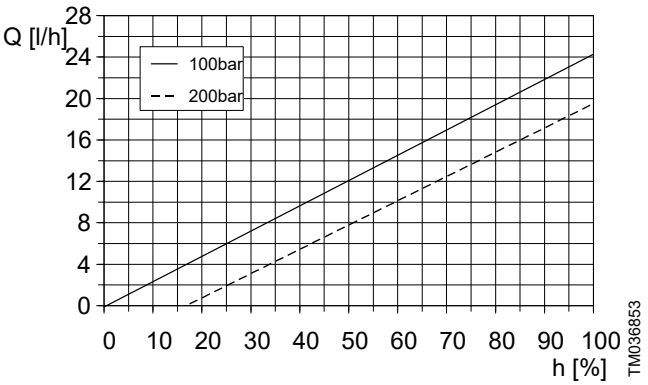

DMH 15-200 (60 Hz), Q_0 = 100 bar

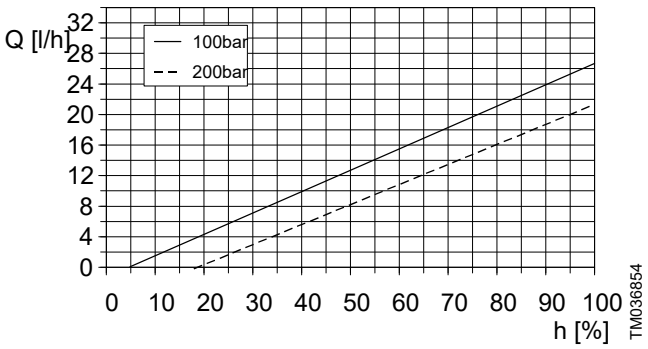

DMH 21-200 (50 Hz), Q_0 = 100 bar

1. Safety declaration

- Please copy, fill in and sign this sheet and attach it to the product returned for service.
- Fill in this document using English or German language.

Fault description

- Please make a circle around the damaged part.
- In the case of an electrical or functional fault, please mark the cabinet.
- Please give a short description of the fault and indicate if the diaphragm is damaged:

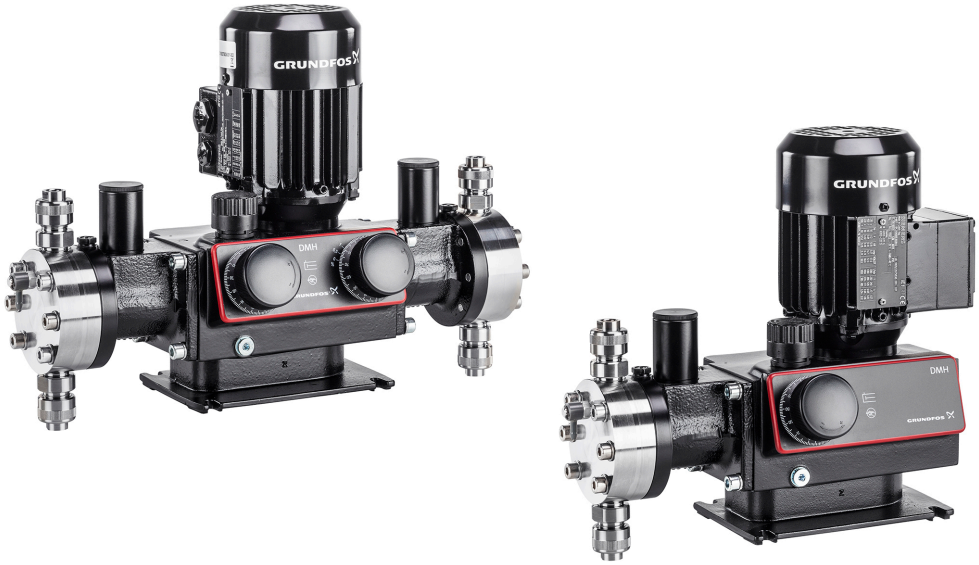

TM074680

Declaration

We hereby declare that this product is free from hazardous chemicals, biological and radioactive substances:

Type designation (see nameplate):
Product number:

The product was used with the following dosing medium:

No dosing medium or water:
A chemical solution, name:

Date and signature:

Company stamp:

1. 中国 RoHS

产品中有害物质的名称及含有信息表

部件名称	有害物质									
	铅 (Pb)	汞 (Hg)	镉 (Cd)	六价铬 (Cr6+)	多溴联苯 (PBBs)	多溴二苯醚 (PBDEs)	邻苯二甲酸二正丁酯（DBP）	邻苯二甲酸二异丁酯 (DIBP)	邻苯二甲酸丁基苄酯（BBP）	邻苯二甲酸二（2-乙基）己酯（DEHP）
泵壳	X	O	O	O	O	O	O	O	O	O
紧固件	X	O	O	O	O	O	O	O	O	O
管件	X	O	O	O	O	O	O	O	O	O
定子	X	O	O	O	O	O	O	O	O	O
转子	X	O	O	O	O	O	O	O	O	O

注 1： O：表示该有害物质在该部件所有均质材料中的含量均不超出电器电子产品有害物质限制使用国家标准要求。
X：表示该有害物质至少在该部件的某一均质材料中含量超出电器电子产品有害物质限制使用国家标准要求。
注 2：以上未列出的部件，表明其有害物质含量均不超出电器电子产品有害物质限制使用国家标准要求。

Argentina
Bombas GRUNDFOS de Argentina S.A.
Ruta Panamericana km. 37.500industin
1619 - Garín Pcia. de B.A.
Tel.: +54-3327 414 444
Fax: +54-3327 45 3190

Australia
GRUNDFOS Pumps Pty. Ltd.
P.O. Box 2040
Regency Park
South Australia 5942
Tel.: +61-8-8461-4611
Fax: +61-8-8340-0155

Austria
GRUNDFOS Pumpen Vertrieb Ges.m.b.H.
Grundfosstraße 2
A-5082 Grödig/Salzburg
Tel.: +43-6246-883-0
Fax: +43-6246-883-30

Belgium
N.V. GRUNDFOS Bellux S.A.
Boomsesteenweg 81-83
B-2630 Aartselaar
Tel.: +32-3-870 7300
Fax: +32-3-870 7301

Bosnia and Herzegovina
GRUNDFOS Sarajevo
Zmaja od Bosne 7-7A
BiH-71000 Sarajevo
Tel.: +387 33 592 480
Fax: +387 33 590 465
www.ba.grundfos.com
E-mail: grundfos@bih.net.ba

Brazil
BOMBAS GRUNDFOS DO BRASIL
Av. Humberto de Alencar Castelo Branco, 630
CEP 09850 - 300
São Bernardo do Campo - SP
Tel.: +55-11 4393 5533
Fax: +55-11 4343 5015

Bulgaria
Grundfos Bulgaria EOOD
Slatina District
Iztochna Tangenta street no. 100
BG - 1592 Sofia
Tel.: +359 2 49 22 200
Fax: +359 2 49 22 201
E-mail: bulgaria@grundfos.bg

Canada
GRUNDFOS Canada inc.
2941 Brighton Road
Oakville, Ontario
L6H 6C9
Tel.: +1-905 829 9533
Fax: +1-905 829 9512

China
GRUNDFOS Pumps (Shanghai) Co. Ltd.
10F The Hub, No. 33 Suhong Road
Minhang District
Shanghai 201106 PRC
Tel.: +86 21 612 252 22
Fax: +86 21 612 253 33

Colombia
GRUNDFOS Colombia S.A.S.
Km 1.5 vía Siberia-Cota Conj. Potrero Chico,
Parque Empresarial Arcos de Cota Bod. 1A.
Cota, Cundinamarca
Tel.: +57(1)-2913444
Fax: +57(1)-8764586

Croatia
GRUNDFOS CROATIA d.o.o.
Buzinski prilaz 38, Buzin
HR-10010 Zagreb
Tel.: +385 1 6595 400
Fax: +385 1 6595 499
www.hr.grundfos.com

Czech Republic
GRUNDFOS Sales Czechia and Slovakia s.r.o.
Čajkovského 21
779 00 Olomouc
Tel.: +420-585-716 111

Denmark
GRUNDFOS DK A/S
Martin Bachs Vej 3
DK-8850 Bjerringbro
Tel.: +45-87 50 50 50
Fax: +45-87 50 51 51
E-mail: info_GDK@grundfos.com
www.grundfos.com/DK

Estonia
GRUNDFOS Pumps Eesti OÜ
Peterburi tee 92G
11415 Tallinn
Tel.: + 372 606 1690
Fax: + 372 606 1691

Finland
OY GRUNDFOS Pumput AB
Trukkikuja 1
FI-01360 Vantaa
Tel.: +358-(0) 207 889 500

France
Pompes GRUNDFOS Distribution S.A.
Parc d'Activités de Chesnes
57, rue de Malacombe
F-38290 St. Quentin Fallavier (Lyon)
Tel.: +33-4 74 82 15 15
Fax: +33-4 74 94 10 51

Germany
GRUNDFOS GMBH
Schlüterstr. 33
40699 Erkrath
Tel.: +49-(0) 211 929 69-0
Fax: +49-(0) 211 929 69-3799
E-mail: infoservice@grundfos.de
Service in Deutschland:
kundendienst@grundfos.de

Greece
GRUNDFOS Hellas A.E.B.E.
20th km. Athinon-Markopoulou Av.
P.O. Box 71
GR-19002 Peania
Tel.: +0030-210-66 83 400
Fax: +0030-210-66 46 273

Hong Kong
GRUNDFOS Pumps (Hong Kong) Ltd.
Unit 1, Ground floor, Siu Wai industrial Centre
29-33 Wing Hong Street & 68 King Lam Street, Cheung Sha Wan
Kowloon
Tel.: +852-27861706 / 27861741
Fax: +852-27858664

Hungary
GRUNDFOS South East Europe Kft.
Tópark u. 8
H-2045 Törökbálint
Tel.: +36-23 511 110
Fax: +36-23 511 111

India
GRUNDFOS Pumps India Private Limited
118 Old Mahabalipuram Road
Thoraipakkam
Chennai 600 097
Tel.: +91-44 2496 6800

Indonesia
PT GRUNDFOS Pompa
Graha intirub Lt. 2 & 3
Jln. Cililitan Besar No.454. Makasar, Jakarta Timur
ID-Jakarta 13650
Tel.: +62 21-469-51900
Fax: +62 21-460 6910 / 460 6901

Ireland
GRUNDFOS (Ireland) Ltd.
Unit A, Merrywell Business Park
Ballymount Road Lower
Dublin 12
Tel.: +353-1-4089 800
Fax: +353-1-4089 830

Italy
GRUNDFOS Pompe Italia S.r.l.
Via Gran Sasso 4
I-20060 Truccazzano (Milano)
Tel.: +39-02-95838112
Fax: +39-02-95309290 / 95838461

Japan
GRUNDFOS Pumps K.K.
1-2-3, Shin-Miyakoda, Kita-ku
Hamamatsu
431-2103 Japan
Tel.: +81 53 428 4760
Fax: +81 53 428 5005

Kazakhstan
Grundfos Kazakhstan LLP
7' Kyz-Zhibek Str., Kok-Tobe micr.
KZ-050020 Almaty Kazakhstan
Tel.: +7 (727) 227-98-55/56

Korea
GRUNDFOS Pumps Korea Ltd.
6th Floor, Aju Building 679-5
Yeoksam-dong, Kangnam-ku, 135-916
Seoul, Korea
Tel.: +82-2-5317 600
Fax: +82-2-5633 725

Latvia
SIA GRUNDFOS Pumps Latvia
Deglava biznesa centrs
Augusta Deglava ielā 60
LV-1035, Rīga,
Tel.: + 371 714 9640, 7 149 641
Fax: + 371 914 9646

Lithuania
GRUNDFOS Pumps UAB
Smolensko g. 6
LT-03201 Vilnius
Tel.: + 370 52 395 430
Fax: + 370 52 395 431

Malaysia
GRUNDFOS Pumps Sdn. Bhd.
7 Jalan Peguam U1/25
Glenmarie industrial Park
40150 Shah Alam, Selangor
Tel.: +60-3-5569 2922
Fax: +60-3-5569 2866

Mexico
Bombas GRUNDFOS de México S.A. de C.V.
Boulevard TLC No. 15
Parque industrial Stiva Aeropuerto
Apodaca, N.L. 66600
Tel.: +52-81-8144 4000
Fax: +52-81-8144 4010

Netherlands
GRUNDFOS Netherlands
Veluwezoom 35
1326 AE Almere
Postbus 22015
1302 CA ALMERE
Tel.: +31-88-478 6336
Fax: +31-88-478 6332
E-mail: info_gnl@grundfos.com

New Zealand
GRUNDFOS Pumps NZ Ltd.
17 Beatrice Tinsley Crescent
North Harbour Industrial Estate
Albany, Auckland
Tel.: +64-9-415 3240
Fax: +64-9-415 3250

Norway
GRUNDFOS Pumper A/S
Strømsveien 344
Postboks 235, Leirdal
N-1011 Oslo
Tel.: +47-22 90 47 00
Fax: +47-22 32 21 50

Poland
GRUNDFOS Pompy Sp. z o.o.
ul. Klonowa 23
Baranowo k. Poznania
PL-62-081 Przeźmierowo
Tel.: (+48-61) 650 13 00
Fax: (+48-61) 650 13 50

Portugal
Bombas GRUNDFOS Portugal, S.A.
Rua Calvet de Magalhães, 241
Apartado 1079
P-2770-153 Paço de Arcos
Tel.: +351-21-440 76 00
Fax: +351-21-440 76 90

Romania
GRUNDFOS Pompe România SRL
S-PARK BUSINESS CENTER, Clădirea A2, etaj 2
Str. Tipografilor, Nr. 11-15, Sector 1, Cod 013714
Bucuresti, Romania
Tel.: 004 021 2004 100
E-mail: romania@grundfos.ro

Serbia
Grundfos Srbija d.o.o.
Omladinskih brigada 90b
11070 Novi Beograd
Tel.: +381 11 2258 740
Fax: +381 11 2281 769
www.rs.grundfos.com

Singapore
GRUNDFOS (Singapore) Pte. Ltd.
25 Jalan Tukang
Singapore 619264
Tel.: +65-6681 9688
Faxax: +65-6681 9689

Slovakia
GRUNDFOS s.r.o.
Prievozská 4D 821 09 BRATISLAVA
Tel.: +421 2 5020 1426
sk.grundfos.com

Slovenia
GRUNDFOS LJUBLJANA, d.o.o.
Leskoškova 9e, 1122 Ljubljana
Tel.: +386 (0) 1 568 06 10
Fax: +386 (0)1 568 06 19
E-mail: tehnika-si@grundfos.com

South Africa
GRUNDFOS (PTY) LTD
16 Lascelles Drive, Meadowbrook Estate
1609 Germiston, Johannesburg
Tel.: (+27) 10 248 6000
Fax: (+27) 10 248 6002
E-mail: lgradidge@grundfos.com

Spain
Bombas GRUNDFOS España S.A.
Camino de la Fuentecilla, s/n
E-28110 Algete (Madrid)
Tel.: +34-91-848 8800
Fax: +34-91-628 0465

Sweden
GRUNDFOS AB
Box 333 (Lunnagårdsgatan 6)
431 24 Mölndal
Tel.: +46 31 332 23 000
Fax: +46 31 331 94 60

Switzerland
GRUNDFOS Pumpen AG
Bruggacherstrasse 10
CH-8117 Fällanden/ZH
Tel.: +41-44-806 8111
Fax: +41-44-806 8115

Taiwan
GRUNDFOS Pumps (Taiwan) Ltd.
7 Floor, 219 Min-Chuan Road
Taichung, Taiwan, R.O.C.
Tel.: +886-4-2305 0868
Fax: +886-4-2305 0878

Thailand
GRUNDFOS (Thailand) Ltd.
92 Chaloem Phrakiat Rama 9 Road
Dokmai, Pravej, Bangkok 10250
Tel.: +66-2-725 8999
Fax: +66-2-725 8998

Turkey
GRUNDFOS POMPA San. ve Tic. Ltd. Sti.
Gebze Organize Sanayi Bölgesi
Ihsan dede Caddesi
2. yol 200. Sokak No. 204
41490 Gebze/ Kocaeli
Tel.: +90 - 262-679 7979
Fax: +90 - 262-679 7905
E-mail: satis@grundfos.com

Ukraine
ТОВ "ГРУНДФОС УКРАЇНА"
Бізнес Центр Європа
Столичне шосе, 103
м. Київ, 03131, Україна
Tel.: (+38 044) 237 04 00
Fax: (+38 044) 237 04 01
E-mail: ukraine@grundfos.com

United Arab Emirates
GRUNDFOS Gulf Distribution
P.O. Box 16768
Jebel Ali Free Zone, Dubai
Tel.: +971 4 8815 166
Fax: +971 4 8815 136

United Kingdom
GRUNDFOS Pumps Ltd.
Grovebury Road
Leighton Buzzard/Beds. LU7 4TL
Tel.: +44-1525-850000
Fax: +44-1525-850011

U.S.A.
Global Headquarters for WU
856 Koomey Road
Brookshire, Texas 77423 USA
Phone: +1-630-236-5500

Uzbekistan
Grundfos Tashkent, Uzbekistan
The Representative Office of Grundfos Kazakhstan in Uzbekistan
38a, Oybek street, Tashkent
Tel.: (+998) 71 150 3290 / 71 150 3291
Fax: (+998) 71 150 3292

© 2025 Grundfos Holding A/S, all rights reserved.

Trademarks displayed in this material, including but not limited to Grundfos and the Grundfos logo, are registered trademarks owned by The Grundfos Group.

99558950 **11.2025**

ECM: 1439012