DMX, DMH with VFD

Variable frequency drive

Installation and operating instructions, supplement

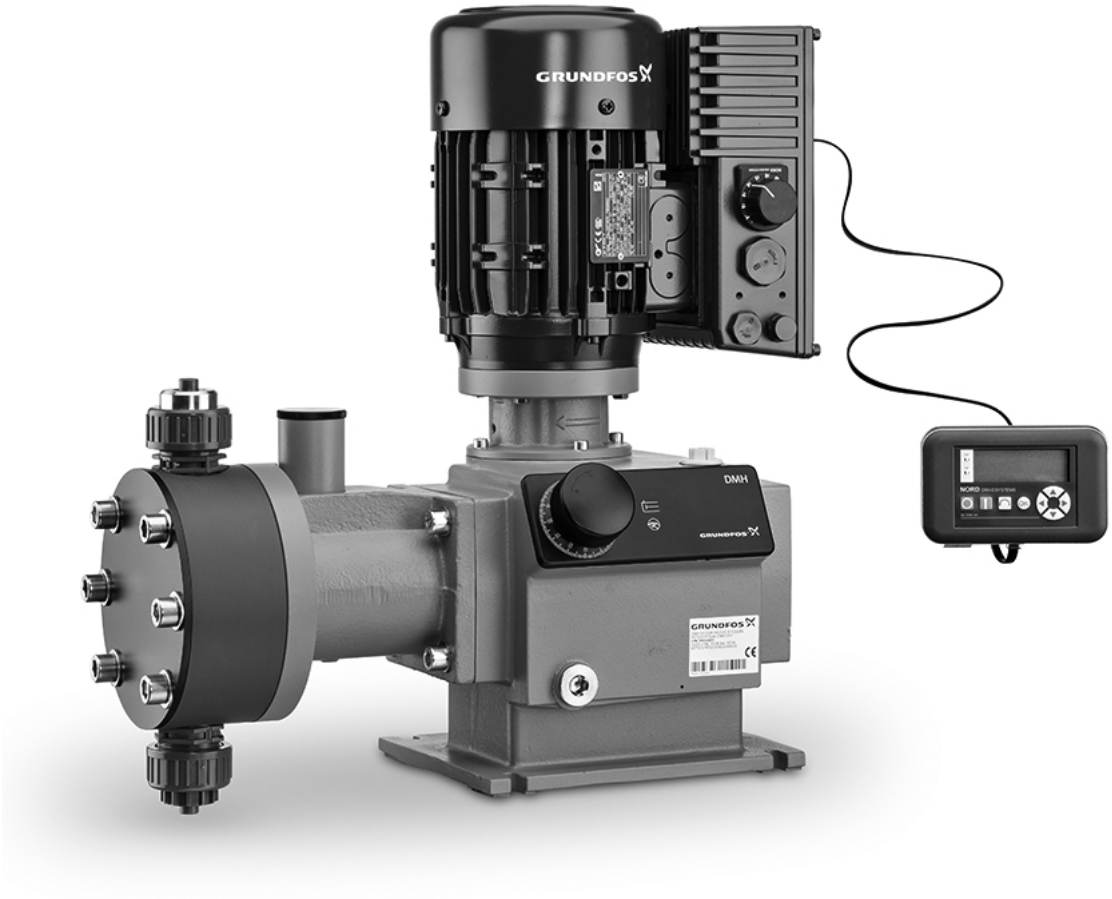

Installation and operating instructions

DMH 25X

http://net.grundfos.com/qr/i/99558949

DMH 28X

http://net.grundfos.com/qr/i/99558950

DMX 221

http://net.grundfos.com/qr/i/99558951

DMX 226

http://net.grundfos.com/qr/i/99558952

DMH 227

http://net.grundfos.com/qr/i/99559294

be
think
innovate

GRUNDFOS

Original installation and operating instructions

CONTENTS

		Page
1.	**Symbols used in this document**	**2**
2.	**Operating pumps with VFD**	**2**
3.	**Link to Nord documents**	**2**
4.	**Technical data**	**2**
5.	**Identification and variants**	**2**
5.1	Type key	2
6.	**Electrical connection**	**3**
6.1	Power supply	3
7.	**VFD specification**	**3**
7.1	VFD variants used with DMX and DMH pumps	3
7.2	Operation modes	3
7.3	Special parameter settings for DMX/DMH	4

Warning
Prior to installation, read these installation and operating instructions. Installation and operation must comply with local regulations and accepted codes of good practice.

Warning
In addition to these instructions, observe all installation and operating instructions supplied with the pump.

Note
The installation and operating instructions for the pump and the supplier manual "BU 0180" for the VFD are available on https://www.nord.com.

1. Symbols used in this document

Warning
If these safety instructions are not observed, it may result in personal injury.

Caution
If these safety instructions are not observed, it may result in malfunction or damage to the equipment.

Note
Notes or instructions that make the job easier and ensure safe operation.

2. Operating pumps with VFD

This manual describes additional conditions or special considerations affecting the operation of pumps with variable frequency drive (VFD).

Caution
This manual is only valid together with the installation and operating instructions for the pump and the supplier manual "BU 0180" for the VFD. All documents should be used.

Caution
VFD used with Grundfos DMX and DMH pumps are available with selected variants and with special parameter settings.
Observe deviations from the supplier range of VFD, see sections *7.1 VFD variants used with DMX and DMH pumps* and *7.3 Special parameter settings for DMX/DMH*.

3. Link to Nord documents

Note
Find more information in the suppliers manuals "BU 0180" and additional manuals in various languages on https://www.nord.com.

4. Technical data

Caution
The values stated on the nameplates and in the installation and operating instructions of the dosing pump must be observed.

For technical data and ambient and operating conditions refer to the installation and operating instructions of the dosing pump.

For electrical data such as current consumption see the nameplates of the motor and the VFD.

Dimensions of DMX and DMH pumps with VFD

For dimensions of pumps with VFD see *Appendix* on page 5.

For all other dimensions see the installation and operating instructions of the dosing pump.

5. Identification and variants

DMX and DMH pumps with PTC motors and integrated VFD are available in different variants, which are shown on the nameplate of the pump as follows:

5.1 Type key

Type	
DMX 132-10D B-PVC/V/C-X-E1U3U3XFAAG	
DMX	DMX dosing pumps
DMH	DMH dosing pumps

Variant	
...	See pump type key

Motor variant and certification	
DMX 132-10D B-PVC/V/C-X-E1U3U3X**FA**AG	
FA	VFD (Variable frequency drive) (without certificates)
FB	VFD with I/O extension board (without certificates)
FC	VFD with internal Profibus (without certificates)

6. Electrical connection

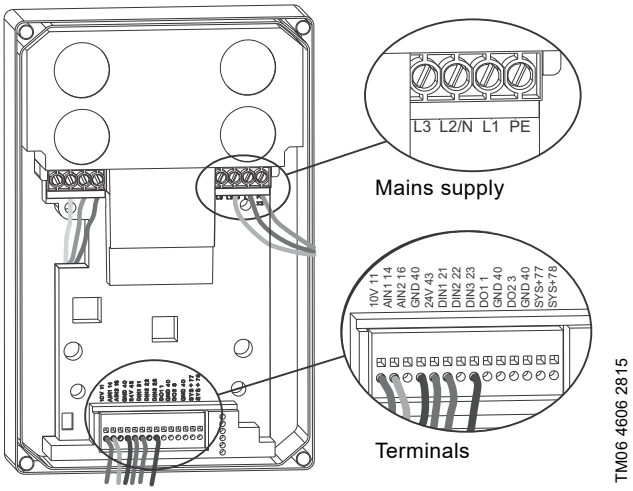

Fig. 1 Electrical connections, overview

VFD variant	Motor variant	Supply voltage
1~ (1-phase)	≤ 0.25 kW	1~ (1-phase) 200-240 V ± 10 %, 47-63 Hz
3~ (3-phase)	> 0.25 kW	3~ (3-phase) 380-480 V - 20 %/+ 10 %, 47-63 Hz

The VFD is already connected to the DMX/DMH dosing pump, only power supply must be connected.

6.1 Power supply

DANGER

Electric shock

- ***Switch off the power supply before making any connections.***
- ***The VFD cabinet must only be opened by authorised and qualified staff.***
- ***All electrical connections must be carried out by a qualified electrician in accordance with local regulations.***
- ***Stripped parts of wires must not protrude from terminals.***

Caution

As soon as mains power supply is connected and switched on, the pump can automatically start operating depending on the potentiometer setting. Make sure that the mains is only switched on when the pump is ready for start-up and operation, see installation and operating instructions of the pump.

Caution

Observe the supplier manual "BU 0180" for the VFD provided with the product.

No special safety measures are required on the mains input side of the frequency converter. It is advisable to use normal mains fuses and a mains switch or circuit breaker.

Isolation from the connector to the mains must always be carried out synchronously for all the poles (L1/L2/L2 or L1/N).

Connection cross section:

- 0.2 - 4/6 mm^2 rigid/flexible cable AWG 24-10
- For looping of the mains voltage, up to a cable cross section of 2 x 2.5 mm^2 double wire end sleeves must be used.

6.1.1 Connecting the VFD to the mains supply

1. Switch off the power supply.
2. Remove the front cover from the VFD power unit.
3. Pull the power supply cable through a cable gland.
4. Strip the cable covering to a length of approx. 3-5 cm and the wires to a length of 7 mm.
5. Connect the wires to the power supply plug according to the terminal diagrams printed in the VFD, see fig. 1 mains supply.
   – 1-phase VFD variant: connect phase line (L1) to L1, neutral line (N) to L2/N and protective earth (PE) to PE.
   – 3-phase VFD variant: connect phase lines (L1, L2, L3) to L1, L2/N and L3, and connect protective earth (PE) to PE.
   – Tighten the screws with 0.5 - 0.6 Nm.
6. Tighten the cable gland.
7. Refit the front cover of the VFD power unit and tighten the screws in the cover. Tighten the screws with 3.5 Nm ± 20 %.

7. VFD specification

7.1 VFD variants used with DMX and DMH pumps

The supplier offers a wide range of VFD variants. Grundfos DMX and DMH pumps are available with selected VFD variants, as follows:

- mounted on the pump motor
- IP66
- with integrated potentiometer
- without braking resistor (BW)
- not ATEX-approved.

7.2 Operation modes

Caution

Observe the supplier manual "BU 0180" for the VFD provided with the product.

The selection of the operation mode (manual or analog) can be made by a central control unit.

- If AIN 1 (analog input 1) is activated, manual mode is selected, and the VFD is operated via potentiometer.
- If AIN 2 (analog input 2) is activated, analog mode is selected, and the VFD is operated via analog signal 4-20 mA.

7.2.1 Permanent setting of operation mode (VFD variant A)

If there is no central control unit, the operation mode can be set permanently to manual or analog.

On default, the VFD is set to manual operation with integrated potentiometer.

Manual operation with integrated potentiometer (default)

- 43 and 22 are connected with a jumper.
  – Digital input 2 is activated.
  – Analog input 1 "AIN 1", which is assigned to the potentiometer, is activated.
- Speed control is only possible via the potentiometer.

For 4-20 mA analog control, the settings have to be made according to chapter *Changing operation mode to analog control (optional)*:

Changing operation mode to analog control (optional)

See fig. 1 terminals.

- The jumper must connect 43 with 23. Disconnect jumper from 22 and connect it to 23.
  – Digital input 3 is activated.
  – Analog input 2 "AIN 2" is activated.
- Signal input is made via the terminals 40 (-) and 16 (+).

7.2.2 Operation modes for variants (VFD variants B - E)

Note

For setting the operation mode for a VFD variant B - E see thew supplier manual "BU 0180" for the VFD.

7.3 Special parameter settings for DMX/DMH

Some parameters have been adapted to DMX/DMH dosing pumps. These parameters differ from the default settings mentioned in the supplier manual for the VFD.

Warning

When resetting the VFD to default settings, the special parameter settings for DMX/DMH are overwritten. The special parameters must be set again.

7.3.1 Mandatory settings

Do not set P506 "automatic fault acknowledgement" to 6 "always".

Caution

In case of an active error (e. g. short-circuit to earth / short circuit), the VFD restarts continuously and damages the system, because P428 is set to 1 "on".

Warning

Danger of malfunction of the VFD with DMX/DMH dosing pump. Do not change the following settings.

Basic parameters

Code	Parameter	Value for DMX/DMH
P102	Start-up time	5 s
P105	Maximum frequency	100 Hz

Control terminals

Code	Index	Parameter	Value for DMX/DMH
P400	-02	Setpoint input function AIN 2 (analog input 2)	01 = Setpoint frequency
P401	-01	Analog ON mode AIN 1 (analog input 1)	2 = 0-10 V monitored
P401	-02	Analog ON mode AIN 2 (analog input 2)	2 = 0-10 V monitored
P402	-01	Adjustment: 0 % AIN 1 (analog input 1)	1.36 V*
P402	-02	Adjustment: 0 % AIN 2 (analog input 2)	1 V
P403	-02	Adjustment: 100 % AIN 2 (analog input 2)	5 V
P420	-01	Digital input function DIN 1 (digital input 1)	02 = Enable left (left-handed rotation)
P420	-02	Digital input function DIN 2 (digital input 2)	19 = Setpoint 1 on/off
P420	-03	Digital input function DIN 3 (digital input 3)	20 = Setpoint 2 on/off
P428		Automatic starting after mains OFF	1 = On (enable with level)

* The minimum frequency for the VFD is set to approx. 5 Hz.

Extra functions

Code	Parameter	Value for DMX/DMH
P504	pulse frequency	8 kHz
P540	mode phase sequence	3 = CCW only; only counter-clockwise direction is possible

Modifications of other parameters and adaptation of the inputs and outputs can be made with the optional "parameter box" or the "NordCon" software. Observe the supplier manual "BU 0180" for the VFD provided with the product.

1. Dimensions of DMX and DMH pumps with VFD

Example drawing of DMH 251

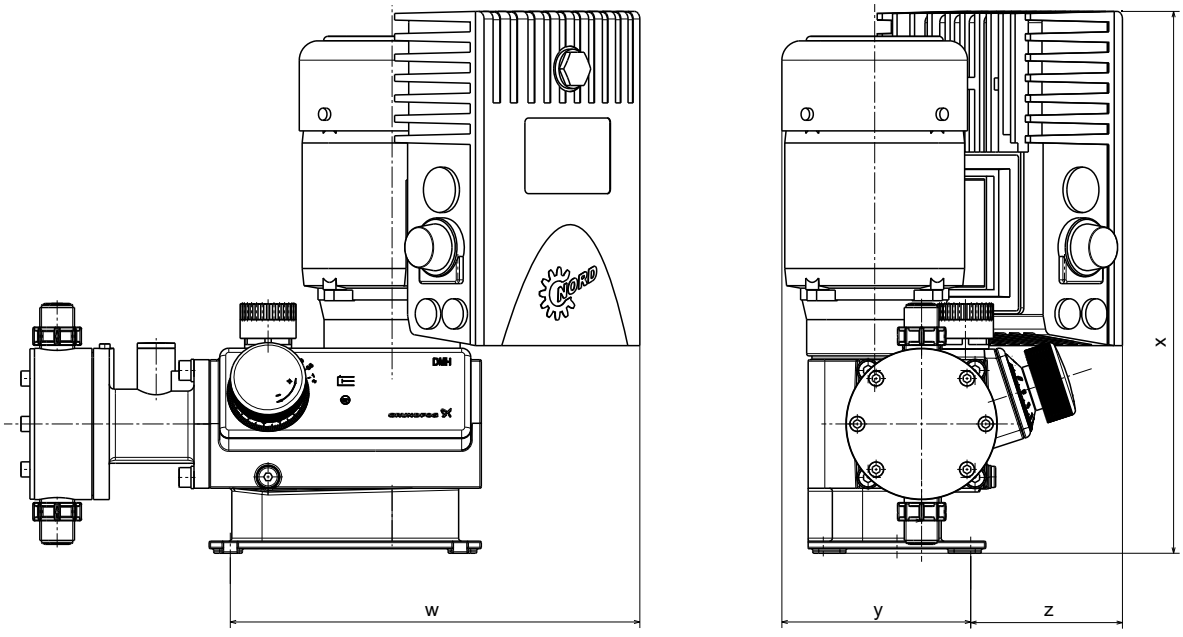

Pump model	Variant	x [mm]	w [mm]	y [mm]	z [mm]	Remark
DMH 251, 252, 253, 280, 281	All	410	271	125	100	VFD size 1; 0.18 / 0.25 kW; 1 AC
DMH 254, 283, 288	Single-head	511	283	195	-	VFD size 1; 0.55 / 0.75 kW; 3 AC
DMH 254, 283, 288	Double-head	511	-	195	90	VFD size 1; 0.55 / 0.75 kW; 3 AC
DMH 255	Single-head	494	257	195	-	VFD size 1; 0.75 / 1.1 kW; 3 AC
DMH 255	Double-head	494	-	195	64	VFD size 1; 0.75 / 1.1 kW; 3 AC
DMH 257, 285, 286, 287	Single-head	547	312	209	-	VFD size 2; 1.5 / 2.2 kW; 3 AC
DMH 285, 286, 287	Double-head	547	312	209	-	VFD size 2; 1.5 / 2.2 kW; 3 AC
DMH 257	Double-head	596	-	218	103	VFD size 2; 2.2 / 2.2 kW; 3 AC
DMX 221	Single-head	376	276	128	97	VFD size 1; 0.18 / 0.25 kW; 1 AC
DMX 226L	Single-head	438	334	172	-	VFD size 1; 0.55 / 0.75 kW; 3 AC
DMX 226L	Double-head	438	-	172	104	VFD size 1; 0.55 / 0.75 kW; 3 AC
DMX 226M	All	410	271	125	100	VFD size 1; 0.18 / 0.25 kW; 1 AC
DMX 227	Single-head	547	312	209	-	VFD size 2; 1.5 / 2.2 kW; 3 AC
DMX 227	Double-head	596	-	218	103	VFD size 2; 2.2 / 2.2 kW; 3 AC

Argentina
Bombas GRUNDFOS de Argentina S.A.
Ruta Panamericana km. 37.500 Centro Industrial Garin
1619 - Garin Pcia. de B.A.
Phone: +54-3327 414 444
Telefax: +54-3327 45 3190

Australia
GRUNDFOS Pumps Pty. Ltd.
P.O. Box 2040
Regency Park
South Australia 5942
Phone: +61-8-8461-4611
Telefax: +61-8-8340 0155

Austria
GRUNDFOS Pumpen Vertrieb Ges.m.b.H.
Grundfosstraße 2
A-5082 Grödig/Salzburg
Tel.: +43-6246-883-0
Telefax: +43-6246-883-30

Belgium
N.V. GRUNDFOS Bellux S.A.
Boomsesteenweg 81-83
B-2630 Aartselaar
Tél.: +32-3-870 7300
Télécopie: +32-3-870 7301

Belarus
Представительство ГРУНДФОС в Минске
220125, Минск
ул. Шафарнянская, 11, оф. 56, БЦ "Порт"
Тел.: +7 (375 17) 286 39 72/73
Факс: +7 (375 17) 286 39 71
E-mail: minsk@grundfos.com

Bosnia and Herzegovina
GRUNDFOS Sarajevo
Zmaja od Bosne 7-7A,
BH-71000 Sarajevo
Phone: +387 33 592 480
Telefax: +387 33 590 465
www.ba.grundfos.com
e-mail: grundfos@bih.net.ba

Brazil
BOMBAS GRUNDFOS DO BRASIL
Av. Humberto de Alencar Castelo Branco, 630
CEP 09850 - 300
São Bernardo do Campo - SP
Phone: +55-11 4393 5533
Telefax: +55-11 4343 5015

Bulgaria
Grundfos Bulgaria EOOD
Slatina District
Iztochna Tangenta street no. 100
BG - 1592 Sofia
Tel. +359 2 49 22 200
Fax. +359 2 49 22 201
email: bulgaria@grundfos.bg

Canada
GRUNDFOS Canada Inc.
2941 Brighton Road
Oakville, Ontario
L6H 6C9
Phone: +1-905 829 9533
Telefax: +1-905 829 9512

China
Grundfos Alldos
Dosing & Disinfection
ALLDOS (Shanghai) Water Technology Co. Ltd.
West Unit, 1 Floor, No. 2 Building (T 4-2)
278 Jinhu Road, Jin Qiao Export Processing Zone
Pudong New Area
Shanghai, 201206
Phone: +86 21 5055 1012
Telefax: +86 21 5032 0596
E-mail: grundfosalldos-CN@grundfos.com

China
GRUNDFOS Pumps (Shanghai) Co. Ltd.
10F The Hub, No. 33 Suhong Road
Minhang District
Shanghai 201106
PRC
Phone: +86-21 6122 5222
Telefax: +86-21 6122 5333

COLOMBIA
GRUNDFOS Colombia S.A.S.
Km 1.5 vía Siberia-Cota Conj. Potrero Chico,
Parque Empresarial Arcos de Cota Bod. 1A.
Cota, Cundinamarca
Phone: +57(1)-2913444
Telefax: +57(1)-8764586

Croatia
GRUNDFOS CROATIA d.o.o.
Buzinski prilaz 38, Buzin
HR-10010 Zagreb
Phone: +385 1 6595 400
Telefax: +385 1 6595 499
www.hr.grundfos.com

GRUNDFOS Sales Czechia and Slovakia s.r.o.
Čapkovského 21
779 00 Olomouc
Phone: +420-585-716 111

Denmark
GRUNDFOS DK A/S
Martin Bachs Vej 3
DK-8850 Bjerringbro
Tlf.: +45-87 50 50 50
Telefax: +45-87 50 51 51
E-mail: info_GDK@grundfos.com
www.grundfos.com/DK

Estonia
GRUNDFOS Pumps Eesti OÜ
Peterburi tee 92G
11415 Tallinn
Tel: + 372 606 1690
Fax: + 372 606 1691

Finland
OY GRUNDFOS Pumput AB
Trukkikuja 1
FI-01360 Vantaa
Phone: +358-(0)207 889 500

France
Pompes GRUNDFOS Distribution S.A.
Parc d'Activités de Chesnes
57, rue de Malacombe
F-38290 St. Quentin Fallavier (Lyon)
Tél.: +33-4 74 82 15 15
Télécopie: +33-4 74 94 10 51

Germany
GRUNDFOS Water Treatment GmbH
Reetzstraße 85
D-76327 Pfinztal (Söllingen)
Tel.: +49 7240 61-0
Telefax: +49 7240 61-177
E-mail: gwt@grundfos.com

Germany
GRUNDFOS GMBH
Schlüterstr. 33
40699 Erkrath
Tel.: +49-(0) 211 929 69-0
Telefax: +49-(0) 211 929 69-3799
E-mail: infoservice@grundfos.de
Service in Deutschland:
E-mail: kundendienst@grundfos.de

Greece
GRUNDFOS Hellas A.E.B.E.
20th km. Athinon-Markopoulou Av.
P.O. Box 71
GR-19002 Peania
Phone: +0030-210-66 83 400
Telefax: +0030-210-66 46 273

Hong Kong
GRUNDFOS Pumps (Hong Kong) Ltd.
Unit 1, Ground floor
Siu Wai Industrial Centre
29-33 Wing Hong Street &
68 King Lam Street, Cheung Sha Wan
Kowloon
Phone: +852-27861706 / 27861741
Telefax: +852-27858664

Hungary
GRUNDFOS Hungária Kft.
Tópark u. 8
H-2045 Törökbálint,
Phone: +36-23 511 110
Telefax: +36-23 511 111

India
GRUNDFOS Pumps India Private Limited
118 Old Mahabalipuram Road
Thoraipakkam
Chennai 600 097
Phone: +91-44 4596 6800

Indonesia
PT. GRUNDFOS POMPA
Graha Intirub Lt. 2 & 3
Jln. Cililitan Besar No.454. Makasar, Jakarta Timur
ID-Jakarta 13650
Phone: +62 21-469-51900
Telefax: +62 21-460 6910 / 460 6901

Ireland
GRUNDFOS (Ireland) Ltd.
Unit A, Merrywell Business Park
Ballymount Road Lower
Dublin 12
Phone: +353-1-4089 800
Telefax: +353-1-4089 830

Italy
GRUNDFOS Pompe Italia S.r.l.
Via Gran Sasso 4
I-20060 Truccazzano (Milano)
Tel.: +39-02-95838112
Telefax: +39-02-95309290 / 95838461

Japan
GRUNDFOS Pumps K.K.
1-2-3, Shin-Miyakoda, Kita-ku
Hamamatsu
431-2103 Japan
Phone: +81 53 428 4760
Telefax: +81 53 428 5005

Korea
GRUNDFOS Pumps Korea Ltd.
6th Floor, Aju Building 679-5
Yeoksam-dong, Kangnam-ku, 135-916
Seoul, Korea
Phone: +82-2-5317 600
Telefax: +82-2-5633 725

Latvia
SIA GRUNDFOS Pumps Latvia
Deglava biznesa centrs
Augusta Deglava ielā 60, LV-1035, Rīga,
Tālr.: + 371 714 9640, 7 149 641
Fakss: + 371 914 9646

Lithuania
GRUNDFOS Pumps UAB
Smolensko g. 6
LT-03201 Vilnius
Tel: + 370 52 395 430
Fax: + 370 52 395 431

Malaysia
GRUNDFOS Pumps Sdn. Bhd.
7 Jalan Peguam U1/25
Glenmarie Industrial Park
40150 Shah Alam
Selangor
Phone: +60-3-5569 2922
Telefax: +60-3-5569 2866

Mexico
Bombas GRUNDFOS de México S.A. de C.V.
Boulevard TLC No. 15
Parque Industrial Stiva Aeropuerto
Apodaca, N.L. 66600
Phone: +52-81-8144 4000
Telefax: +52-81-8144 4010

Netherlands
GRUNDFOS Netherlands
Veluwezoom 35
1326 AE Almere
Postbus 22015
1302 CA ALMERE
Tel.: +31-88-478 6336
Telefax: +31-88-478 6332
E-mail: info_gnl@grundfos.com

New Zealand
GRUNDFOS Pumps NZ Ltd.
17 Beatrice Tinsley Crescent
North Harbour Industrial Estate
Albany, Auckland
Phone: +64-9-415 3240
Telefax: +64-9-415 3250

Norway
GRUNDFOS Pumper A/S
Strømsveien 344
Postboks 235, Leirdal
N-1011 Oslo
Tlf.: +47-22 90 47 00
Telefax: +47-22 32 21 50

Poland
GRUNDFOS Pompy Sp. z o.o.
ul. Klonowa 23
Baranowo k. Poznania
PL-62-081 Przeźmierowo
Tel: (+48-61) 650 13 00
Fax: (+48-61) 650 13 50

Portugal
Bombas GRUNDFOS Portugal, S.A.
Rua Calvet de Magalhães, 241
Apartado 1079
P-2770-153 Paço de Arcos
Tel.: +351-21-440 76 00
Telefax: +351-21-440 76 90

Romania
GRUNDFOS Pompe România SRL
Bd. Biruintei, nr 103
Pantelimon county Ilfov
Phone: +40 21 200 4100
Telefax: +40 21 200 4101
E-mail: romania@grundfos.ro

Russia
ООО Грундфос Россия
ул. Школьная, 39-41
Москва, RU-109544, Russia
Тел. (+7) 495 564-88-00 (495) 737-30-00
Факс (+7) 495 564 8811
E-mail grundfos.moscow@grundfos.com

Serbia
Grundfos Srbija d.o.o.
Omladinskih brigada 90b
11070 Novi Beograd
Phone: +381 11 2258 740
Telefax: +381 11 2281 769
www.rs.grundfos.com

Singapore
GRUNDFOS (Singapore) Pte. Ltd.
25 Jalan Tukang
Singapore 619264
Phone: +65-6681 9688
Telefax: +65-6681 9689

Slovakia
GRUNDFOS s.r.o.
Prievozská 4D
821 09 BRATISLAVA
Phona: +421 2 5020 1426
sk.grundfos.com

Slovenia
GRUNDFOS LJUBLJANA, d.o.o.
Leskoškova 9e, 1122 Ljubljana
Phone: +386 (0) 1 568 06 10
Telefax: +386 (0)1 568 0619
E-mail: tehnika-si@grundfos.com

South Africa
Grundfos (PTY) Ltd.
16 Lascelles Drive, Meadowbrook Estate
1609 Germiston, Johannesburg
Tel.: (+27) 10 248 6000
Fax: (+27) 10 248 6002
E-mail: lgradidge@grundfos.com

Spain
Bombas GRUNDFOS España S.A.
Camino de la Fuentecilla, s/n
E-28110 Algete (Madrid)
Tel.: +34-91-848 8800
Telefax: +34-91-628 0465

Sweden
GRUNDFOS AB
Box 333 (Lunnagårdsgatan 6)
431 24 Mölndal
Tel.: +46 31 332 23 000
Telefax: +46 31 331 94 60

Switzerland
GRUNDFOS Pumpen AG
Bruggacherstrasse 10
CH-8117 Fällanden/ZH
Tel.: +41-44-806 8111
Telefax: +41-44-806 8115

Taiwan
GRUNDFOS Pumps (Taiwan) Ltd.
7 Floor, 219 Min-Chuan Road
Taichung, Taiwan, R.O.C.
Phone: +886-4-2305 0868
Telefax: +886-4-2305 0878

Thailand
GRUNDFOS (Thailand) Ltd.
92 Chaloem Phrakiat Rama 9 Road,
Dokmai, Pravej, Bangkok 10250
Phone: +66-2-725 8999
Telefax: +66-2-725 8998

Turkey
GRUNDFOS POMPA San. ve Tic. Ltd. Sti.
Gebze Organize Sanayi Bölgesi
Ihsan dede Caddesi,
2. yol 200. Sokak No. 204
41490 Gebze/ Kocaeli
Phone: +90 - 262-679 7979
Telefax: +90 - 262-679 7905
E-mail: satis@grundfos.com

Ukraine
Бізнес Центр Європа
Столичне шосе, 103
м. Київ, 03131, Україна
Телефон: (+38 044) 237 04 00
Факс.: (+38 044) 237 04 01
E-mail: ukraine@grundfos.com

United Arab Emirates
GRUNDFOS Gulf Distribution
P.O. Box 16768
Jebel Ali Free Zone
Dubai
Phone: +971-4- 8815 166
Telefax: +971-4-8815 136

United Kingdom
GRUNDFOS Pumps Ltd.
Grovebury Road
Leighton Buzzard/Beds. LU7 4TL
Phone: +44-1525-850000
Telefax: +44-1525-850011

U.S.A.
GRUNDFOS Pumps Corporation
9300 Loiret Blvd.
Lenexa, Kansas 66219
Phone: +1-913-227-3400
Telefax: +1-913-227-3500

Uzbekistan
Grundfos Tashkent, Uzbekistan The Representative Office of Grundfos Kazakhstan in Uzbekistan
38a, Oybek street, Tashkent
Телефон: (+998) 71 150 3290 / 71 150 3291
Факс: (+998) 71 150 3292

Addresses revised 15.01.2019

Trademarks displayed in this material, including but not limited to Grundfos, the Grundfos logo and "be think innovate" are registered trademarks owned by The Grundfos Group. All rights reserved. © 2019 Grundfos Holding A/S, all rights reserved.

99559295 0819
ECM: 1250494