UPM2, UPM GEO, UPM2K

Circulator pumps

50/60 Hz

be
think
innovate

GRUNDFOS

Table of contents

1. General data **4**
Introduction . . . 4
Applications . . . 4
Features and benefits . . . 4
ErP, Ecodesign regulation in brief . . . 5
Pumped liquids . . . 5
Identification . . . 5
Performance range . . . 6
Product range . . . 7

2. Control mode and signals **8**
Control principles . . . 8
Control signals . . . 8
PWM input signal HEATING . . . 9
PWM feedback signal STANDARD . . . 10
Data . . . 12

3. Construction **13**
Exploded view . . . 13
Sectional drawing . . . 14
Material specification . . . 14
Description of components . . . 14

4. Installation **17**
Mechanical installation . . . 17
Electrical installation . . . 17

5. Start-up **19**

6. Performance curves, technical data **20**
Curve conditions . . . 20

7. Data sheets, standard housings **21**
UPM2 15-40 130, 1 x 230 V, 50/60 Hz . . . 21
UPM2 25-40 130, 1 x 230 V, 50/60 Hz . . . 22
UPM2 25-40 180, 1 x 230 V, 50/60 Hz . . . 23
UPM2 32-40 180, 1 x 230 V, 50/60 Hz . . . 24
UPM2 15-50 130, 1 x 230 V, 50/60 Hz . . . 25
UPM2 25-50 130, 1 x 230 V, 50/60 Hz . . . 26
UPM2 25-50 180, 1 x 230 V, 50/60 Hz . . . 27
UPM2 32-50 180, 1 x 230 V, 50/60 Hz . . . 28
UPM2 15-60 130, 1 x 230 V, 50/60 Hz . . . 29
UPM2 25-60 130, 1 x 230 V, 50/60 Hz . . . 30
UPM2 25-60 180, 1 x 230 V, 50/60 Hz . . . 31
UPM2 32-60 180, 1 x 230 V, 50/60 Hz . . . 32
UPM2 15-70 130, 1 x 230 V, 50/60 Hz . . . 33
UPM2 25-70 130, 1 x 230 V, 50/60 Hz . . . 34
UPM2 25-70 180, 1 x 230 V, 50/60 Hz . . . 35
UPM2 32-70 180, 1 x 230 V, 50/60 Hz . . . 36
UPM2 15-75 130, 1 x 230 V, 50/60 Hz . . . 37
UPM2 25-75 130, 1 x 230 V, 50/60 Hz . . . 38
UPM2 25-75 180, 1 x 230 V, 50/60 Hz . . . 39
UPM GEO 25-85 130, 1 x 230 V, 50/60 Hz . . . 40
UPM GEO 25-85 180, 1 x 230 V, 50/60 Hz . . . 41
UPM GEO 25-85 N 180, 1 x 230 V, 50/60 Hz . . . 42
UPM GEO 32-85 180, 1 x 230 V, 50/60 Hz . . . 43
UPM2K 15-40 130, 1 x 230 V, 50/60 Hz . . . 44
UPM2K 25-40 130, 1 x 230 V, 50/60 Hz . . . 45
UPM2K 25-40 180, 1 x 230 V, 50/60 Hz . . . 46
UPM2K 15-50 130, 1 x 230 V, 50/60 Hz . . . 47
UPM2K 25-50 130, 1 x 230 V, 50/60 Hz . . . 48
UPM2K 25-50 180, 1 x 230 V, 50/60 Hz . . . 49
UPM2K 15-60 130, 1 x 230 V, 50/60 Hz . . . 50
UPM2K 25-60 130, 1 x 230 V, 50/60 Hz . . . 51
UPM2K 25-60 180, 1 x 230 V, 50/60 Hz . . . 52

UPM2K 15-70 130, 1 x 230 V, 50/60 Hz . . . 53
UPM2K 25-70 130, 1 x 230 V, 50/60 Hz . . . 54
UPM2K 25-70 180, 1 x 230 V, 50/60 Hz . . . 55
UPM2K 15-75 130, 1 x 230 V, 50/60 Hz . . . 56
UPM2K 25-75 130, 1 x 230 V, 50/60 Hz . . . 57
UPM2K 25-75 180, 1 x 230 V, 50/60 Hz . . . 58

8. Data sheets, special housings 59
UPM2 15-40 GGMBP, 1 x 230 V, 50/60 Hz . . . 59
UPM2 15-50 GGMBP, 1 x 230 V, 50/60 Hz . . . 60
UPM2 15-60 GGMBP, 1 x 230 V, 50/60 Hz . . . 61
UPM2 15-70 GGMBP, 1 x 230 V, 50/60 Hz . . . 62
UPM2 15-40 ES, 1 x 230 V, 50/60 Hz . . . 63
UPM2 15-50 ES, 1 x 230 V, 50/60 Hz . . . 64
UPM2 15-60 ES, 1 x 230 V, 50/60 Hz . . . 65
UPM2 15-70 ES, 1 x 230 V, 50/60 Hz . . . 66
UPM2 15-40 AOS, 1 x 230 V, 50/60 Hz . . . 67
UPM2 15-50 AOS, 1 x 230 V, 50/60 Hz . . . 68
UPM2 15-60 AOS, 1 x 230 V, 50/60 Hz . . . 69
UPM2 15-70 AOS, 1 x 230 V, 50/60 Hz . . . 70

9. Accessories 71

10. Approvals and certificates 72
EC declaration of conformity . . . 72
VDE certificate . . . 73
Grundfos Product Chemical Compliance declaration concerning the non-use of certain chemical substances . . . 73

1. General data

Introduction

This data booklet deals with the Grundfos UPM2, UPM GEO and UPM2K product ranges:

Standard in-line housings

- UPM2 xx-40
- UPM2 xx-50
- UPM2 xx-60
- UPM2 xx-70
- UPM2 xx-75
- UPM GEO xx-85
- UPM2K xx-40
- UPM2K xx-50
- UPM2K xx-60
- UPM2K xx-70
- UPM2K xx-75.

Special housings

- UPM2 15-xx GGMBP
- UPM2 15-xx ES
- UPM2 15-xx AOS.

Applications

UPM2

This circulator pump is designed to be integrated in boilers and other heating appliances with remote control of the speed, corresponding to low-voltage PWM signal input.

UPM GEO

This circulator pump is particularly suitable for cold-water applications.

The pump is designed to be integrated in geothermal heat pumps as well as in heating and air-conditioning systems with remote control of the speed, corresponding to low-voltage PWM signal input.

UPM2K

This circulator pump is particularly suitable for cold-water applications with lower performance requirements than for the UPM GEO.

The pump is designed to be integrated in geothermal heat pumps as well as in heating and air-conditioning systems with remote control of the speed, corresponding to low-voltage PWM signal input.

Speed control can reduce the power consumption considerably. In addition, speed control is required to control the performance of a system.

Features and benefits

Grundfos UPM2, UPM GEO and UPM2K pumps offer a number of features and benefits of importance to the customer.

Features

UPM2

- Remotely speed-controlled, high-efficiency pump fitted with electronically commutated motor (ECM) with permanent-magnet rotor and frequency converter
- to be controlled via digital pulse-width modulation (PWM) low-voltage signal
- validated components, second generation of the first boiler-integrated variable-speed ECM circulator pumps
- highly reliable, more than 250,000 units installed with success since 2006
- fits into existing boiler ranges, no expanded space requirements, possible use of existing pump housings, electrical compatibility with existing PWM controllers and no ambient-temperature constraints (EN 60335)
- cost-optimised and highly available thanks to the use of existing mass production facilities
- energy-optimised due to improved hydraulic efficiency.

UPM GEO and UPM2K

- Circulator pump for cold-water applications
- remotely speed-controlled, high-efficiency pump fitted with electronically commutated motor (ECM) with permanent-magnet rotor and frequency converter
- to be controlled via digital pulse-width modulation (PWM) low-voltage signal
- validated components of existing variable-speed ECM circulator pumps
- improved motor technology and hydraulics, resulting in high pump efficiency
- particularly optimised for geothermal heat pumps, in terms of performance and robustness
- fit for cold antifreeze glycol- or ethanol-containing media
- motor protected against condensed water by means of drain holes and double-coated wiring
- fit for operation in condensing environments thanks to the electronics being separated from the motor
- electrocoated cast-iron housing.

Benefits

UPM2, UPM GEO and UPM2K

- Use up to 80 % less electrical power than conventional constant-speed pumps.
- Use up to 60 % less electrical power than conventional speed-controlled pumps.

ErP, Ecodesign regulation in brief

The EU has addressed the climate challenge:
In August 2015, the new Energy-using Products (ErP) regulation on glandless circulator pumps integrated in products will take effect. The regulation will set radically new standards for energy efficiency in pumps integrated in boiler, solar and heat pump systems.

The essentials

- Glandless circulator pumps integrated in products shall have an energy efficiency index (EEI) of not more than 0.23, the benchmark level being 0.20.
- Integrated pumps will be measured differently from stand-alone pumps due to the various integrated functions in the many customised hydraulic solutions on the market.
- All circulator pumps integrated in products which generate and/or transfer heat, and all types of media, are included. This means that not only heating systems, but also solar thermal and heat pump systems, will be affected by the ErP regulation.
- Spare pumps for systems sold before August 2015 are allowed until 2020.
- Conformity with EU regulations will be governed through mandatory CE marking.

Grundfos is ErP-ready

Grundfos UPM2, UPM GEO and UPM2K pumps already meet the new ecodesign requirements for 2015, as described in the EU regulations EC/641/2009 and EC/622/2012.

Pumped liquids

- Thin, clean, non-aggressive and non-explosive liquids, not containing solid particles, fibres or mineral oil.
- In heating systems, the water should meet the requirements of accepted standards on water quality in heating systems, for example the German standard VDI 2035.
- In domestic hot-water systems, the pump should be used only for water with a degree of hardness lower than approx. 14 °dH.
- **UPM GEO and UPM2K:** Mixtures of water with antifreeze media such as glycol or ethanol down to -10 °C.

Note: The pump must not be used for the transfer of flammable liquids such as diesel oil and petrol.

Glycol or other antifreeze media

UPM GEO and UPM2K pumps can be used in circuits filled with antifreeze media containing for example glycol. Depending on the type of glycol, mixture and liquid temperature, the viscosity will increase, compared to water as medium. The viscosity increase will affect the pressure loss in the system as well as the efficiency, performance and load of the pump. This may result in a lower maximum curve due to the pump being controlled by a power-limiting function which protects against overload.

Example

If the water/propylene-glycol mixture is 50 %, and the liquid temperature is +2 °C, the viscosity will be 15 cSt. Compared to 100 % water at 60 °C (at the same flow), the maximum head will decrease by 1.0 to 1.5 metres.

Identification

Type key

Example	UPM2	15 - 60	130

Pump range:
UPM2
UPM GEO
UPM2K

Nominal diameter (DN) of suction and discharge ports [mm]

Maximum head [dm]

Material:
[ ]: Cast-iron pump housing
N: Stainless steel pump housing

Port-to-port length [mm]

Nameplate

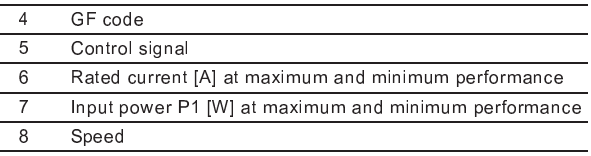

Fig. 1 Nameplate

Pos.	Description
1	Type designation
2	Voltage [V]
3	Frequency [Hz]
4	GF code
5	Control signal
6	Rated current [A] at maximum and minimum performance
7	Input power P1 [W] at maximum and minimum performance
8	Speed
9	Approvals
10	Direction of rotation
11	Product number
12	Production code (YYWW)
13	Country of origin
14	CE mark
15	Enclosure class
16	Temperature class
17	Maximum system pressure [MPa]
18	Energy index
19	Customer item number

Performance range

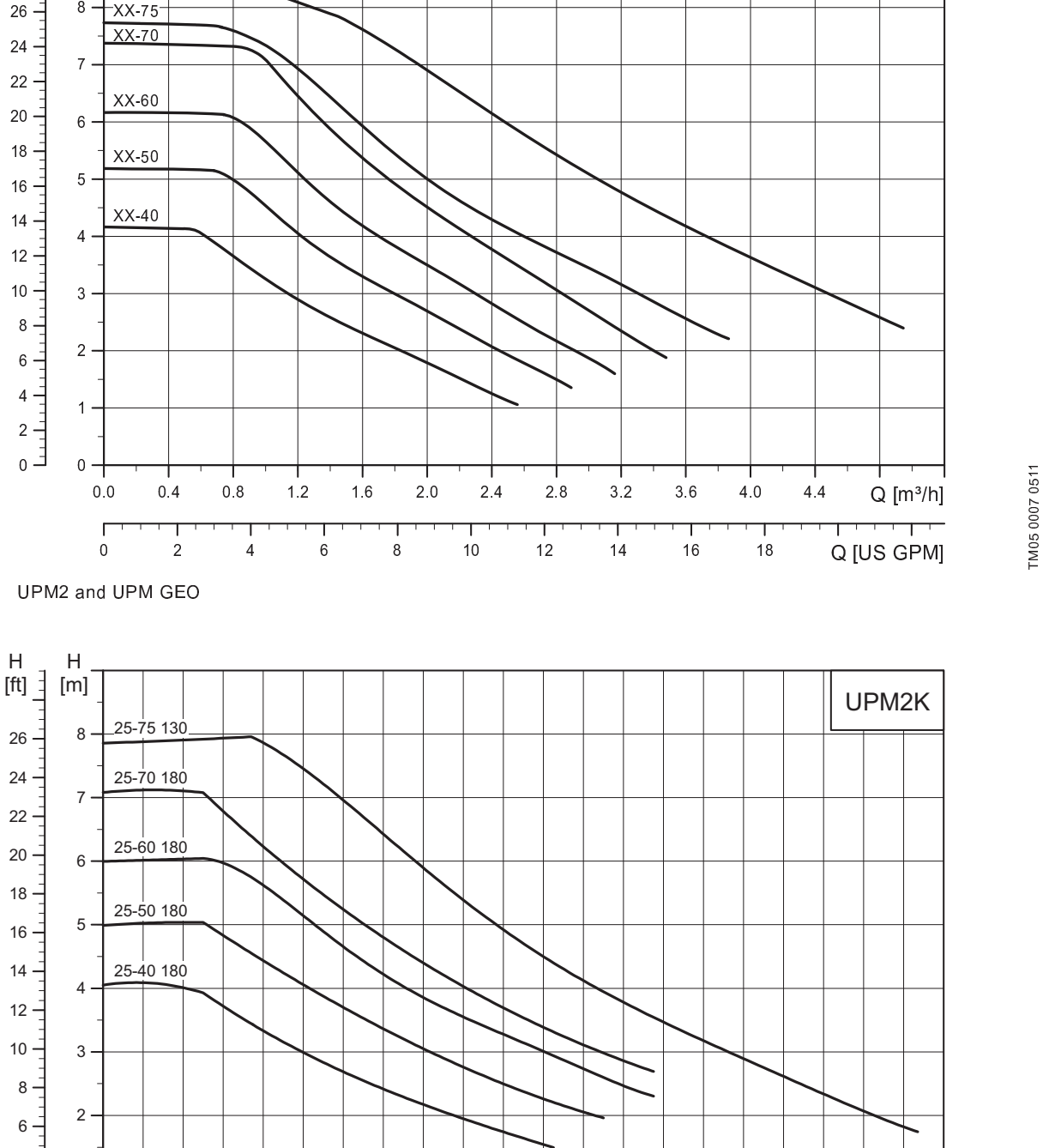

Fig. 2 UPM2 and UPM GEO

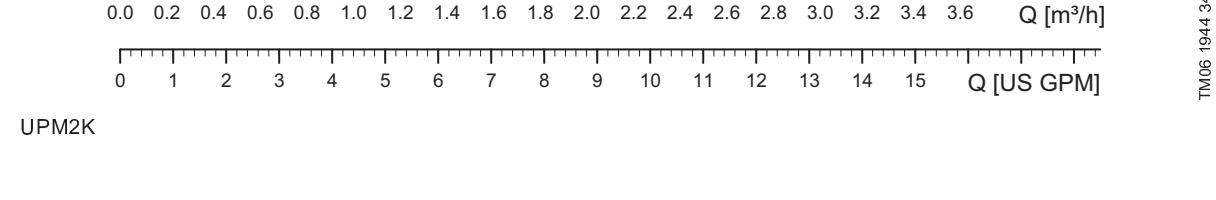

Fig. 3 UPM2K

Product range

Connection	Pump type	Port-to-port length [mm]	Data sheet page
G 1	UPM2 15-40	130	21
G 1 1/2	UPM2 25-40	130	22
G 1 1/2	UPM2 25-40	180	23
G 2	UPM2 32-40	180	24
G 1	UPM2 15-50	130	25
G 1 1/2	UPM2 25-50	130	26
G 1 1/2	UPM2 25-50	180	27
G 2	UPM2 32-50	180	28
G 1	UPM2 15-60	130	29
G 1 1/2	UPM2 25-60	130	30
G 1 1/2	UPM2 25-60	180	31
G 2	UPM2 32-60	180	32
G 1	UPM2 15-70	130	33
G 1 1/2	UPM2 25-70	130	34
G 1 1/2	UPM2 25-70	180	35
G 2	UPM2 32-70	180	36
G 1	UPM2 15-75	130	37
G 1 1/2	UPM2 25-75	130	38
G 1 1/2	UPM2 25-75	180	39
G 1 1/2	UPM GEO 25-85	130	40
G 1 1/2	UPM GEO 25-85	180	41
G 1 1/2	UPM GEO 25-85 N	180	42
G 2	UPM GEO 32-85	180	43
G 1	UPM2K 15-40	130	44
G 1 1/2	UPM2K 25-40	130	45
G 1 1/2	UPM2K 25-40	180	46
G 1	UPM2K 15-50	130	47
G 1 1/2	UPM2K 25-50	130	48
G 1 1/2	UPM2K 25-50	180	49
G 1	UPM2K 15-60	130	50
G 1 1/2	UPM2K 25-60	130	51
G 1 1/2	UPM2K 25-60	180	52
G 1	UPM2K 15-70	130	53
G 1 1/2	UPM2K 25-70	130	54
G 1 1/2	UPM2K 25-70	180	55
G 1	UPM2K 15-75	130	56
G 1 1/2	UPM2K 25-75	130	57
G 1 1/2	UPM2K 25-75	180	58
-	UPM2 15-40 GGMBP	-	59
-	UPM2 15-50 GGMBP	-	60
-	UPM2 15-60 GGMBP	-	61
-	UPM2 15-70 GGMBP	-	62
G 1	UPM2 15-40 ES	-	63
G 1	UPM2 15-50 ES	-	64
G 1	UPM2 15-60 ES	-	65
G 1	UPM2 15-70 ES	-	66
G 1	UPM2 15-40 AOS	130	67
G 1	UPM2 15-50 AOS	130	68
G 1	UPM2 15-60 AOS	130	69
G 1	UPM2 15-70 AOS	130	70

2. Control mode and signals

Control principles

The UPM2, UPM GEO and UPM2K pumps are controlled via a digital low-voltage pulse-width modulation (PWM) signal which means that the speed of rotation depends on the input signal. The speed changes as a function of the input profile.

Control signals

Digital low-voltage PWM signal

The square-wave PWM signal is designed for a 100 to 4000 Hz frequency range.

The PWM signal is used to select the speed (speed command) and as feedback signal. The PWM frequency on the feedback signal is fixed at 75 Hz in the pump.

Duty cycle

d % = 100 x t/T

Example

T = 2 ms (500 Hz)
t = 0.6 ms
d % = 100 x 0.6 / 2 = 30 %
Rating:
U_{iH} = 4-24 V
U_{iL} = < 1 V
I_{iH} = < 10 mA

Fig. 4 PWM signal

Abbreviation	Description
T	Period of time [sec.]
d	Duty cycle (t/T)
U_{iH}	High-level input voltage
U_{iL}	Low-level input voltage
I_{iH}	High-level input current

Interface

The UPM2, UPM GEO and UPM2K interface consists of an electronic part connecting the external control signal to the pump. The interface translates the external signal into a signal type that the microprocessor can understand.

In addition, the interface ensures that the user cannot get into contact with dangerous voltage if touching the signal wires when 230 V is connected to the pump.

Note: "Signal ref." is a signal reference with no connection to protective earth.

Fig. 5 Schematic drawing, interface

PWM input signal HEATING

At high PWM signal percentages (duty cycles), a hysteresis prevents the pump from starting and stopping if the input signal fluctuates around the shifting point.

At low PWM signal percentages, the pump speed is high for safety reasons. In case of a cable breakage in a gas boiler system, the pumps will continue to run at maximum speed to transfer heat from the primary heat exchanger. This is also suitable for heat pumps to ensure that the pumps transfer heat in case of a cable breakage.

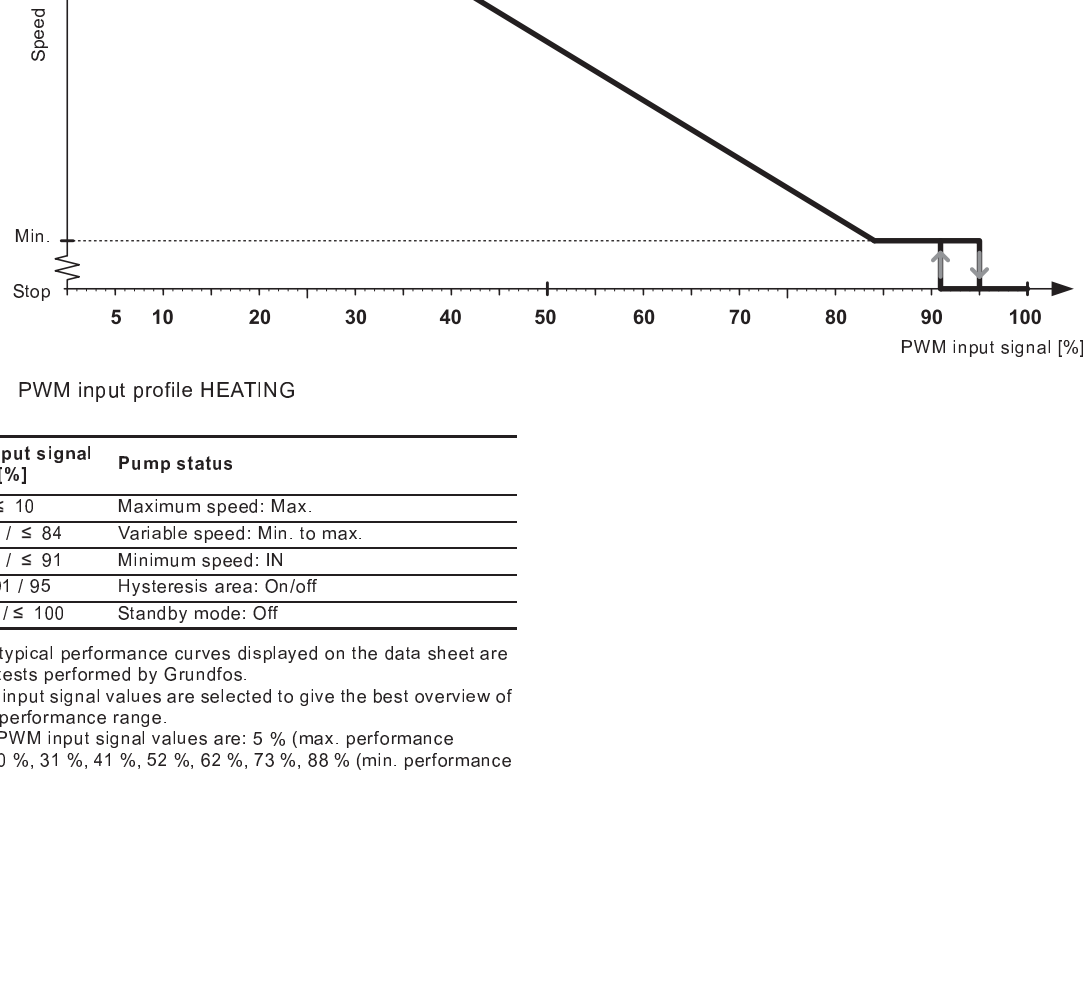

Fig. 6 PWM input profile HEATING

PWM input signal [%]	Pump status
≤ 10	Maximum speed: Max.
> 10 / ≤ 84	Variable speed: Min. to max.
> 84 / ≤ 91	Minimum speed: IN
> 91 / 95	Hysteresis area: On/off
> 95 / ≤ 100	Standby mode: Off

The eight typical performance curves displayed on the data sheet are results of tests performed by Grundfos.
The PWM input signal values are selected to give the best overview of the pump performance range.
Standard PWM input signal values are: 5 % (max. performance curves), 20 %, 31 %, 41 %, 52 %, 62 %, 73 %, 88 % (min. performance curve).

PWM feedback signal STANDARD

A PWM feedback signal provides information about the current performance of the pump, such as current power consumption or various alarm or warning modes. See fig. 7 or 8.

Alarms

Alarm output signals are available. Some PWM output signals are dedicated to alarm information. If the supply voltage is measured to a value below 195 V, the output signal is set to 75 %. If, at the same time, the rotor is locked due to deposits in the hydraulics, the output signal is set to 90 %, as this alarm is given a higher priority.

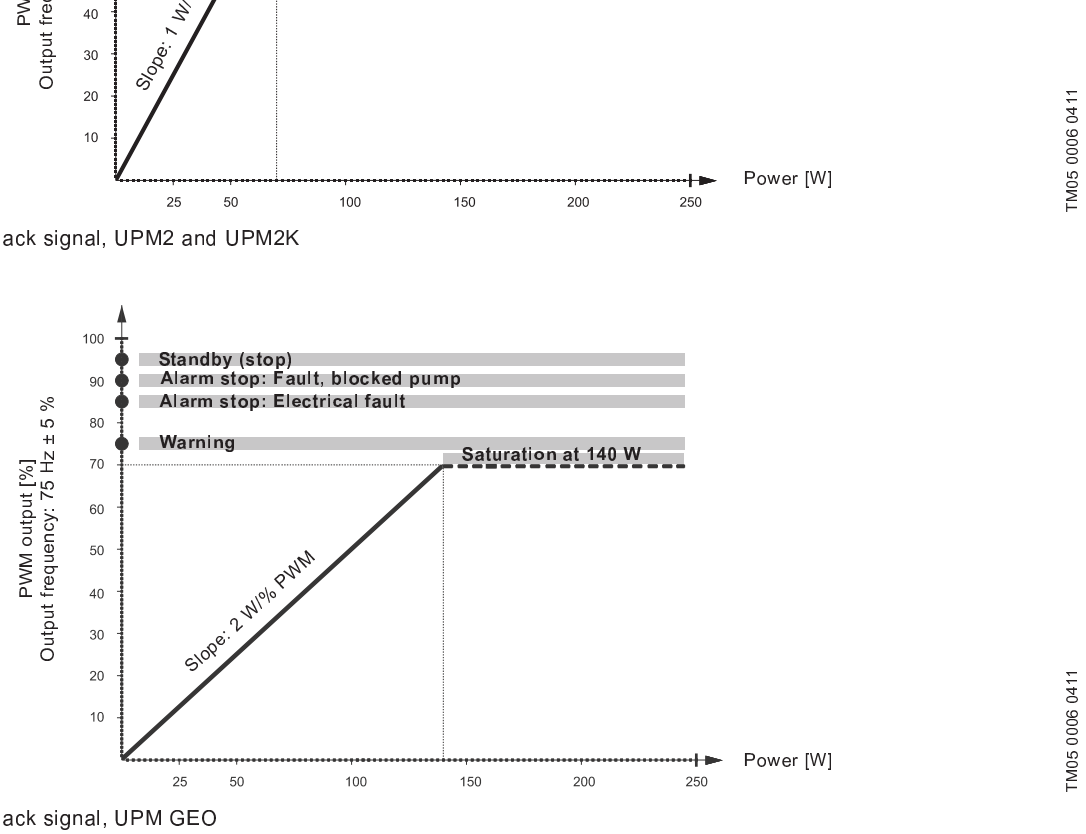

Fig. 7 PWM feedback signal, UPM2 and UPM2K

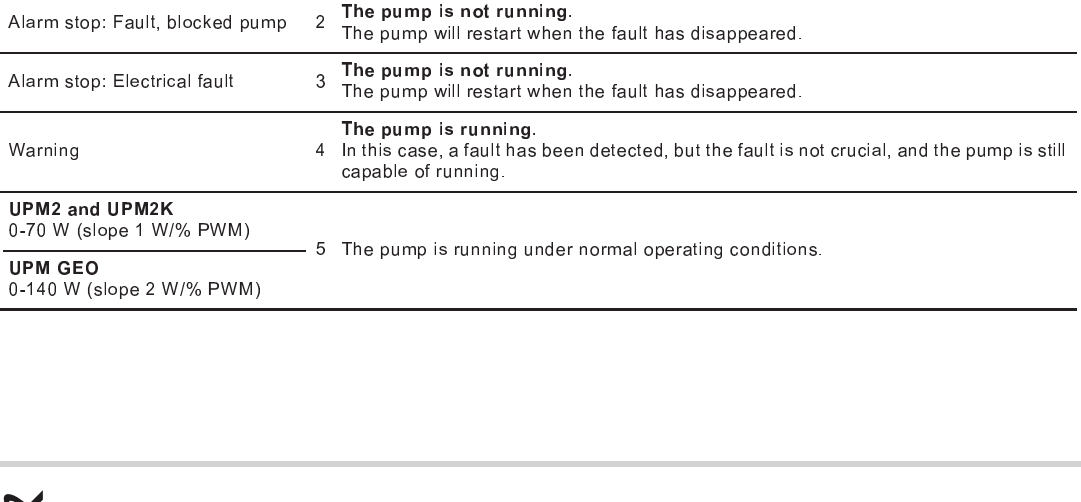

Fig. 8 PWM feedback signal, UPM GEO

PWM output signal [%]	Pump status	Priority and description
95	Standby (stop)	1 The pump is intentionally stopped.
90	Alarm stop: Fault, blocked pump	2 **The pump is not running.** The pump will restart when the fault has disappeared.
85	Alarm stop: Electrical fault	3 **The pump is not running.** The pump will restart when the fault has disappeared.
75	Warning	4 **The pump is running.** In this case, a fault has been detected, but the fault is not crucial, and the pump is still capable of running.
0-70	**UPM2 and UPM2K** 0-70 W (slope 1 W/% PWM) **UPM GEO** 0-140 W (slope 2 W/% PWM)	5 The pump is running under normal operating conditions.

PWM feedback signal - flow estimation (on demand)

As an option, the PWM feedback signal can also be used to indicate the flow of the circulator on defined pump housings. The accuracy of the feedback signal is depending on the operation point and media temperature, but it gives a good indication on the actual flow.

Example: In this case the PWM output range between 0-70 % shows the flow between 0 and 2.1 m^3/h with a slope of 0.03 m^3/h / % PWM.

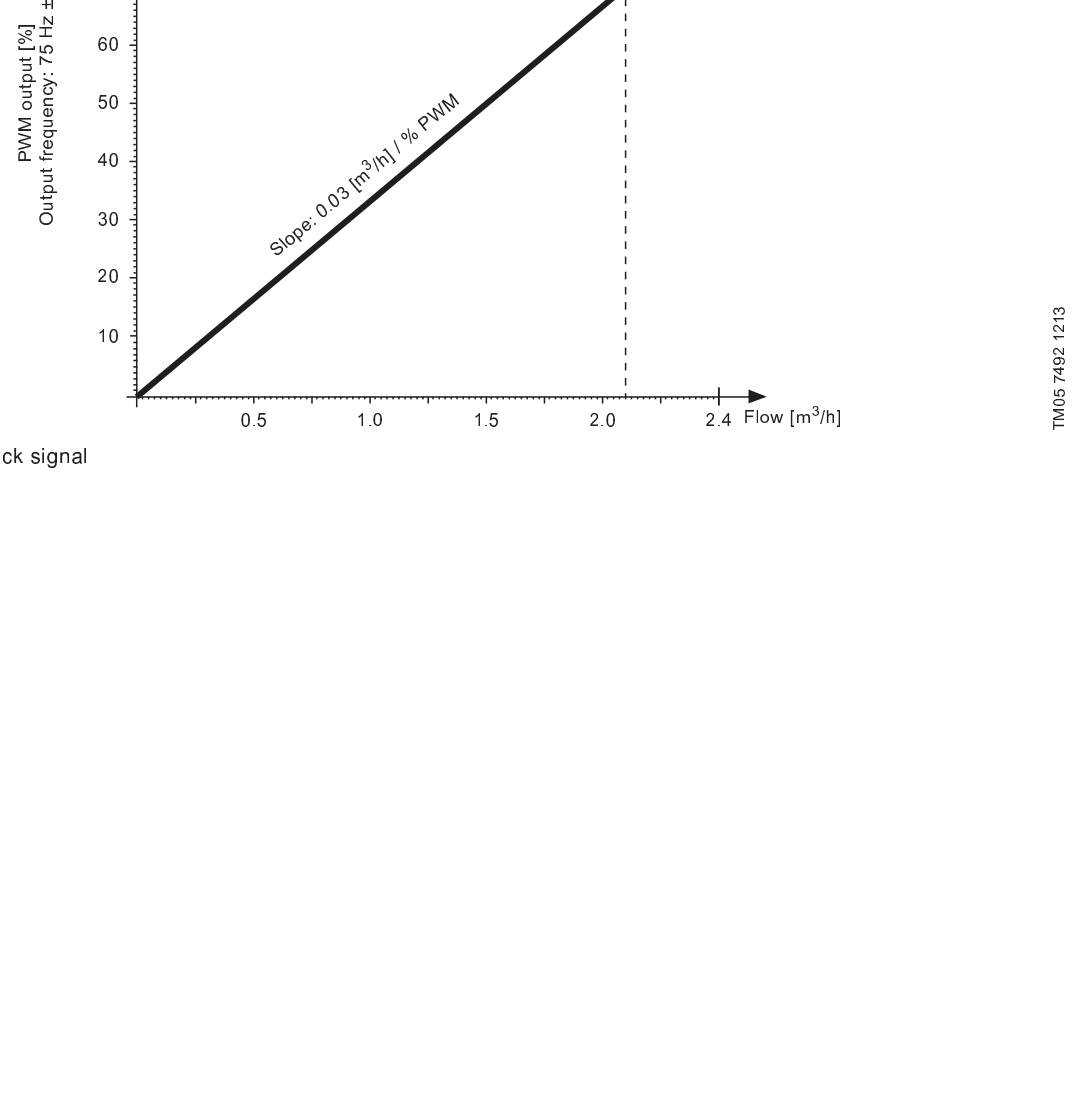

Fig. 9 PWM feedback signal

Data

UPM2, UPM GEO and UPM2K

Maximum rating	Symbol	Value
PWM frequency input		
High-speed optocoupler	f	100-4000 Hz
Low-speed optocoupler		150-800 Hz
Typical standby power consumption		0.4 W
Guaranteed standby power consumption		< 1 W
Rated input voltage		
High level	U_{iH}	4-24 V
Low level	U_{iL}	< 1 V
High-level input current	I_{iH}	< 10 mA
Input duty cycle	PWM	0-100 %
PWM frequency output, open collector	f	75 Hz ± 5 %
Accuracy of output signal regarding power consumption	-	± 2 % of PWM signal
Accuracy of output signal regarding flow		
< 1 m^3/h		± 0.1 m^3/h
1 to 2.5 m^3/h		± 0.2 m^3/h
Note: A PWM output signal below 5 % is too inaccurate for the calculation of the flow.		
Output duty cycle	PWM	0-100 %
Collector emitter breakdown voltage on output transistor	U_c	< 70 V
Collector current on output transistor	I_c	< 50 mA
Maximum power dissipation on output resistor	P_R	125 mW
Zener diode working voltage	U_z	36 V
Maximum power dissipation in Zener diode	P_z	300 mW

3. Construction

Exploded view

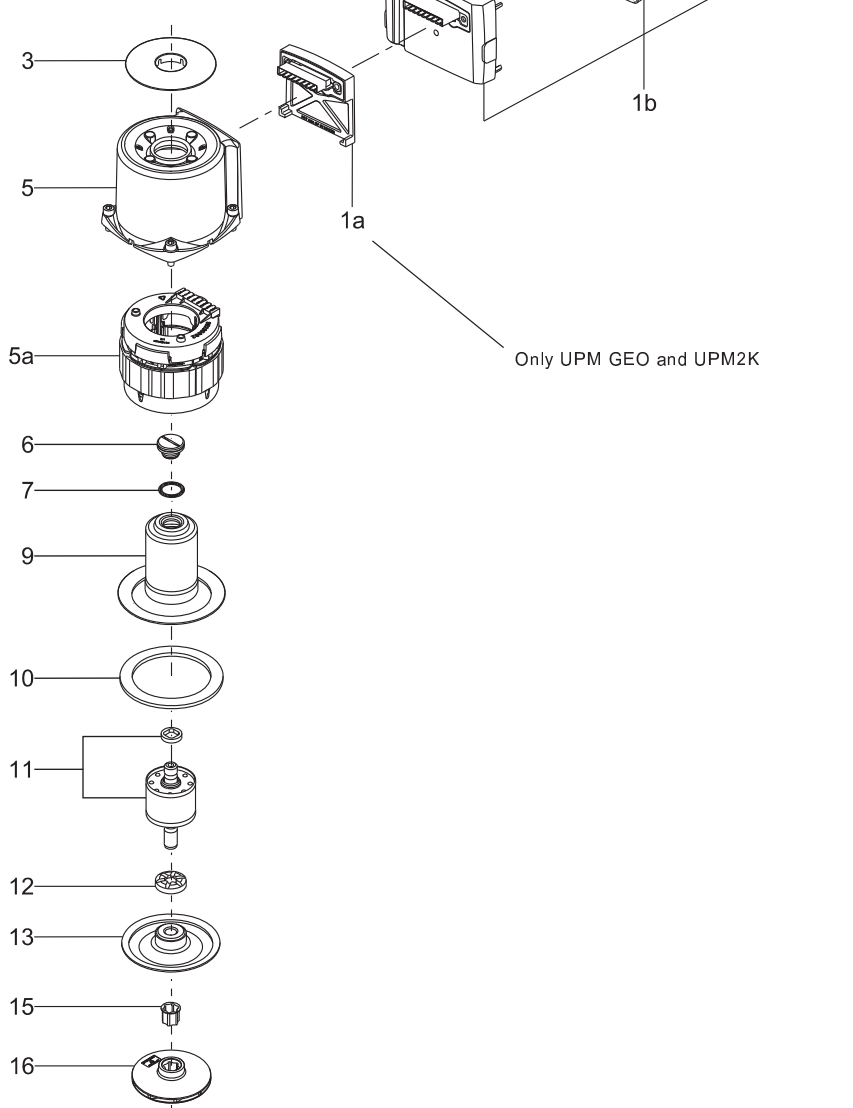

Fig. 10 UPM2, UPM GEO and UPM2K

Sectional drawing

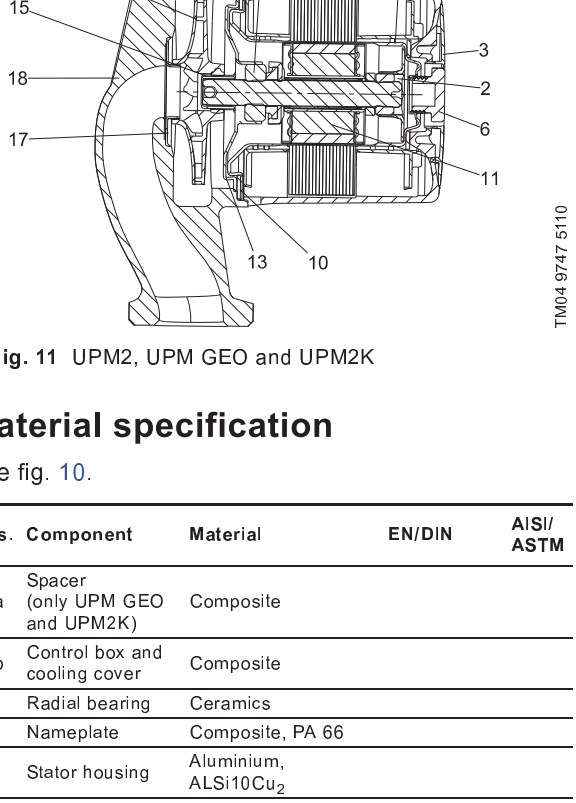

Fig. 11 UPM2, UPM GEO and UPM2K

Material specification

See fig. 10.

Pos.	Component	Material	EN/DIN	AISI/ ASTM
1a	Spacer (only UPM GEO and UPM2K)	Composite		
1b	Control box and cooling cover	Composite		
2	Radial bearing	Ceramics		
3	Nameplate	Composite, PA 66		
5	Stator housing	Aluminium, $ALSi10Cu_2$		
5a	Stator	Copper wire		
6	Air-venting/ de-blocking screw	Brass, nickelled, Ms58	2.0401.30	
7	O-ring	EPDM		
9	Rotor can	Stainless steel	1.4301/ 1.4521	304
10	Gasket	EPDM rubber		
11	Stop ring	PES 30 % GF		
	Shaft	Ceramics		
	Rotor cladding	Stainless steel	1.4301/ 1.4521	304
12	Thrust bearing	Carbon		
	Thrust bearing retainer	EPDM rubber		
13	Bearing plate	Stainless steel	1.4301	304
15	Split cone	Stainless steel	1.4301	304
16	Impeller	Composite/ PES 30 % GF		
17	Neck ring	Stainless steel	1.4301	304
18	Pump housing	Cast iron	EN-GJL-150	
		Stainless steel*	1.4308	CF8

* For UPM GEO 25-85 180 N

Description of components

The Grundfos UPM2, UPM GEO and UPM2K pumps are of the canned-rotor type, i.e. pump and motor form an integral unit without shaft seal and with only one gasket for sealing and four screws for fastening the stator housing to the pump housing. The bearings are lubricated by the pumped liquid. The focus has been on using eco-friendly materials as well as on limiting the number of materials.

Motor

The efficiency of the 4-pole, synchronous, electronically commutated permanent-magnet (ECM/PM) motor type is considerably higher compared to a conventional asynchronous squirrel-cage motor.

The PM motor is designed according to the canned-rotor principle. The design of the mechanical motor components has mainly focused on these features:

- robustness achieved through efficient protection of loaded components
- simple design meaning as few components as possible, each with several functions
- high efficiency due to permanent magnets and low-friction bearings.

The motor is cooled by the pumped liquid which reduces the sound pressure level to a minimum. Being software-protected, the pump requires no further motor protection.

Stator housing

The die-cast stator housing with four fixing holes enables easy change of control box and nameplate positions by removing the four screws holding the stator housing and turning the housing to the desired position. See fig. 12.

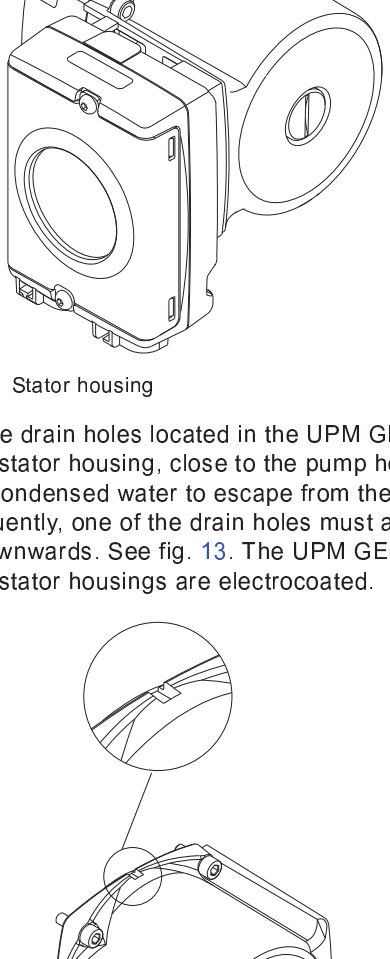

TM05 0417 1011

Fig. 12 Stator housing

The three drain holes located in the UPM GEO and UPM2K stator housing, close to the pump housing, enable condensed water to escape from the pump. Consequently, one of the drain holes must always point downwards. See fig. 13. The UPM GEO and UMP2K stator housings are electrocoated.

TM05 0413 1011

Fig. 13 Drain hole in stator housing

Stator and windings

The UPM2, UPM GEO and UPM2K have a two-phase inserted stator similar to the UP Series 100 circulator pumps.

The UPM GEO and UPM2K is designed for pumping very cold liquids (down to -10 °C). In such applications, condensation may occur in the stator housing.
To protect the stator, the copper wires have been provided with reinforced insulation.

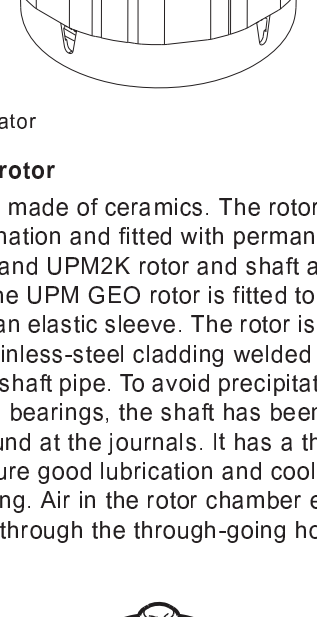

TM05 0415 1011

Fig. 14 Stator

Shaft with rotor

The shaft is made of ceramics. The rotor core is made of iron lamination and fitted with permanent magnets. The UPM2 and UPM2K rotor and shaft are moulded together. The UPM GEO rotor is fitted to the shaft with a pipe and an elastic sleeve. The rotor is encapsulated in a thin stainless-steel cladding welded to the end covers and shaft pipe. To avoid precipitation of calcium in the radial bearings, the shaft has been plunge-ground at the journals. It has a through-going hole to ensure good lubrication and cooling of the upper bearing. Air in the rotor chamber escapes into the system through the through-going holes of the shaft.

TM03 1803 3205

Fig. 15 Shaft with rotor

Stop ring

The stop ring protects the rotor against axial translation towards the radial bearing at the top of the rotor can. The stop ring is made of PES.

TM05 7995 1713

Fig. 16 Stop ring

Rotor can

The drawn stainless-steel rotor holds the ground and honed upper radial bearing at the top. The rotor can has an air-venting/de-blocking screw.

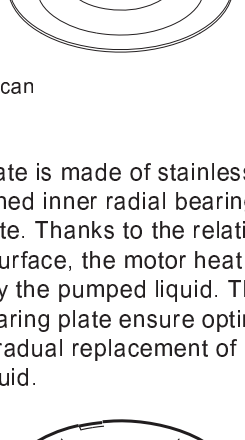

TM05 0416 1011

Fig. 17 Rotor can

Bearing plate

The bearing plate is made of stainless steel. The ground and honed inner radial bearing is pressed into the bearing plate. Thanks to the relatively large bearing plate surface, the motor heat is effectively carried away by the pumped liquid. The four tiny laser holes of the bearing plate ensure optimum venting and minimise the gradual replacement of rotor liquid with the pumped liquid.

TM03 1793 3105

Fig. 18 Bearing plate

Thrust bearing

The thrust bearing is fitted to the shaft in a flexible suspension. In combination with the bearing plate, the thrust bearing prevents forces from being transmitted axially to rotor and rotor can.

TM03 1792 3105

Fig. 19 Thrust bearing

Impeller

The composite impeller is of the radial type with curved blades. See fig. 20. The impeller is secured to the shaft with a split cone. See fig. 10, pos. 15. The impeller, shaft with rotor and bearing plate are assembled in one unit to eliminate possible misalignment in the bearings.

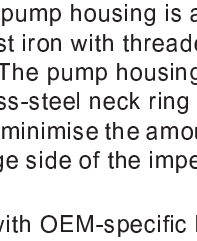

TM03 1794 3105

Fig. 20 Impeller

Pump housing

As standard, the pump housing is available in electrocoated cast iron with threaded suction and discharge ports. The pump housing is of the in-line type. The stainless-steel neck ring is pressed into the pump housing to minimise the amount of liquid running from the discharge side of the impeller to the suction side.

UPM2 versions with OEM-specific housings are available on request. For specific housings, see *7. Data sheets, standard housings*.

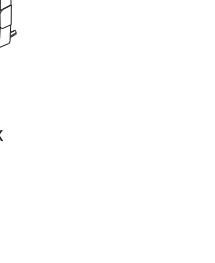

TM03 9732 4307

Fig. 21 Pump housing

Control box

The UPM2, UPM GEO and UPM2K control box is made of black composite material with an aluminium heat sink. It contains the PCBs for internal power supply and communication.

TM05 0412 1011

Fig. 22 Control box

4. Installation

Mechanical installation

Mounting dimensions appear from the data sheets. See pages 21 to 55.

Arrows on the pump housing indicate the liquid flow direction through the pump. The pump is designed to be installed pumping upwards, downwards or horizontally.

Note: The pump must always be installed with horizontal motor shaft within ± 5 °.

The pump should be installed in the system in such a way that no major amount of air flowing through the pump or gathering in the pump housing will affect the pump when it is out of operation. If, in addition, a non-return valve is installed in the flow pipe, there is a high risk of dry running as the air cannot pass the valve.

Control box positions

The permissible control box positions are indicated in the specific pump data sheets. See pages 21 to 55.

Changing the control box position

To change the control box position, remove the screws holding the pump head, and turn the control box to the desired position. Replace the screws and tighten securely.

Note: Before any dismantling of the pump, the system must be drained, or the isolating valves on either side of the pump must be closed.

Insulation

When the pump is to be insulated, the control box (especially the cooling cover) must not be covered in order to allow cooling by the surrounding air. If the pump is installed in a cabinet or fitted with insulation shells, the inside air temperature has to be evaluated. If constant ambient air temperatures higher than 55 °C are to be expected, please contact our Grundfos HVAC OEM Division.

Diffusion-tight, cold-water insulation must not cover the pump head. The drain holes located in the stator housing must always be free.

Ambient temperature

Maximum 55 °C.

Note: The ambient temperature for the UPM2 with a permissible liquid temperature from +2 °C to +95 °C should always be lower than the liquid temperature, as otherwise condensation may form in the stator housing.

Relative air humidity

Maximum 95 %, non-condensing environment.

Note: The UPM GEO and UPM2K can handle a condensing environment.

Storage temperature

Maximum 70 °C.

Electrical installation

The electrical connection and protection must be carried out in accordance with local regulations.

- The pump requires no external motor protection.
- Check that the supply voltage and frequency correspond to the values stated on the nameplate.

Supply voltage

1 x 230 V + 10 %/- 15 %, 50/60 Hz.

Reduced supply voltage

The pump will run with reduced performance at voltages down to 160 VAC.

Inrush current

The inrush current is the charge current to the electrolytic capacitor in the power supply to the electronics. The maximum current amplitude depends on the power supply and the complete wiring from the distributor transformer to the pump.

The pump is internally controlled by a small frequency converter running on a DC voltage. Therefore, the 230 VAC supply voltage is rectified to a DC voltage before it reaches the frequency converter. This is done by a rectifier and a capacitor. See fig. 23.

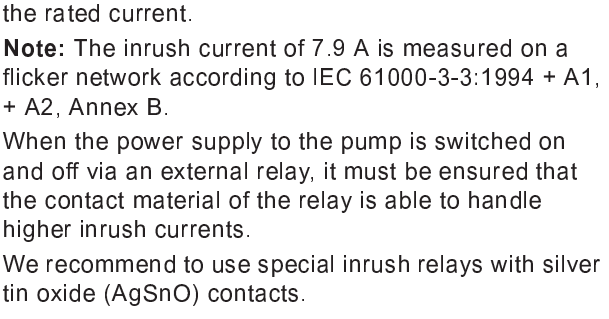

Fig. 23 Rectification of VAC voltage to DC voltage

The load of electronically commutated motors (ECM) behaves as a capacitive load and not as a motor load like in a standard pump.

When the power supply is switched on, the capacitor will behave as a short-circuit (as it is "empty", i.e. it has not been charged). Therefore, the current is only limited by the sum of the resistance in the NTC thermistor and the resistance in the coil of the EMC filter.

If the power supply is switched on when the supply voltage is at its highest level, the inrush current can become up to 7.9 A (see below) for a very short period of time. After this period of time, the current will drop to the rated current.

Note: The inrush current of 7.9 A is measured on a flicker network according to IEC 61000-3-3:1994 + A1, + A2, Annex B.

When the power supply to the pump is switched on and off via an external relay, it must be ensured that the contact material of the relay is able to handle higher inrush currents.

We recommend to use special inrush relays with silver tin oxide (AgSnO) contacts.

Leakage current

The pump mains filter will cause a discharge current to earth during operation.

Leakage current: < 3.5 mA.

High-voltage test

The pump incorporates filter components that are connected to protective earth. Therefore, a standard high-voltage test **cannot** be made without damaging the filters.

Earth leakage circuit breaker (ELCB)

If the pump is connected to an electric installation where an earth leakage circuit breaker (ELCB) is used as additional protection, this circuit breaker must trip when earth fault currents with DC content (pulsating DC) occur (type A).

The earth leakage circuit breaker must be marked with the symbol shown in fig. 24.

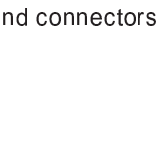

TMA0 6789 2511

Fig. 24 Symbol on earth leakage circuit breaker

Power supply

Externally speed-controlled UPM2, UPM GEO and UPM2K pumps must be connected to a system controller via a PWM signal.

The pump must not be used with an external speed control which varies the supply voltage, for example phase-cut or pulse-cascade control.

The pump can be connected to the power supply in different ways, depending on the pump model.
See section *9. Accessories*, page 71.

Note: All cables and connectors used must comply with EN 60335-1.

Plug connection	Description
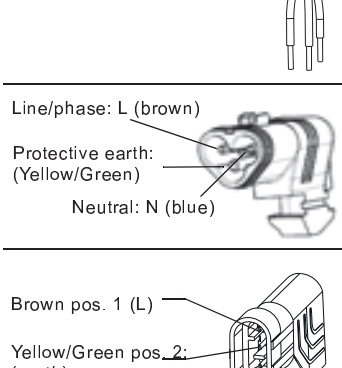	Molex 3-pin plug pointing towards or away from the nameplate
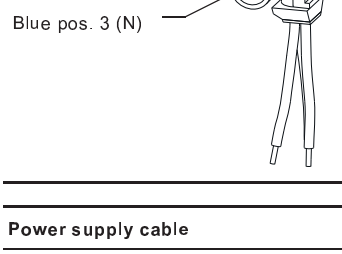	Volex plug pointing towards or away from the nameplate
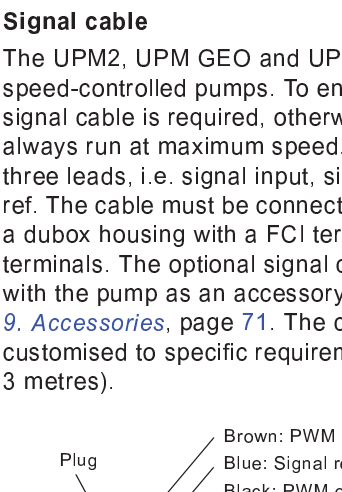	Superseal plug pointing towards or away from the nameplate

Power supply cable	Dimension
H03V2V2-F 3G 0.75 ZW 105 GR	3 x 0.75 mm^2

Signal cable

The UPM2, UPM GEO and UPM2K are externally speed-controlled pumps. To enable pump control, a signal cable is required, otherwise the pump will always run at maximum speed. The signal cable has three leads, i.e. signal input, signal output and signal ref. The cable must be connected to the control box by a dubox housing with a FCI terminal block and terminals. The optional signal cable can be supplied with the pump as an accessory. See section *9. Accessories*, page 71. The cable length is customised to specific requirements (maximum 3 metres).

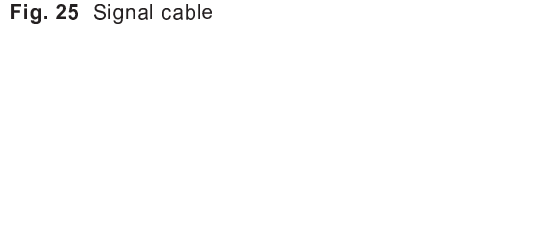

Fig. 25 Signal cable

5. Start-up

Do not start the pump until the system has been filled with liquid and vented. As it is self-venting, the rotor can does not require venting before start-up. Air inside the pump will be transported by the medium into the system during the first minutes after pump start-up.

Furthermore, the required minimum inlet pressure must be available at the pump inlet.

Note: The system cannot be vented through the pump. As the pump is self-venting, it does not require venting before start-up. It is recommended to vent pumps installed in systems where the pumped medium is very dirty, as well as after service of the pump. The screw may be loosened to check if the system has been vented completely.

Caution: When loosening the air-venting/de-blocking screw, be aware of hot, spraying water. It might happen that the pump stops when the air-venting/de-blocking screw is loosened.

When connected to an external PWM signal, the pump speed is controlled by an external controller which might even stop the pump. Without signal, the pump will run at maximum performance.

6. Performance curves, technical data

Curve conditions

The guidelines below apply to the performance curves on the following pages:

- Test liquid: airless water.
- The curves apply to a density of 983.2 kg/m^3 and a liquid temperature of +20 °C.
- All curves show average values and should not be used as guarantee curves. If a specific minimum performance is required, individual measurements must be made.
- The curves apply to a kinematic viscosity of 0.474 mm^2/s (0.474 cSt).
- The conversion between head H [m] and pressure p [kPa] has been made for water with a density of 1000 kg/m^3. For liquids with other densities, e.g. hot water, the discharge pressure is proportional to the density.
- Curves obtained according to EN 16297.
- The performance of PWM controlled pumps is measured with Heating profile at eight PWM values: 5 % (max.), 20 %, 31 %, 41 %, 52 %, 62 %, 73 %, 88 % (min.).
- SOLAR profile curves are measured mirrored with 95 % (max.), 80 %, 69 %, 59 %, 48 %, 38 %, 27 %, 12 % (min.).
- Maximum curves are limited by speed and power.

7. Data sheets, standard housings

UPM2 15-40 130, 1 x 230 V, 50/60 Hz

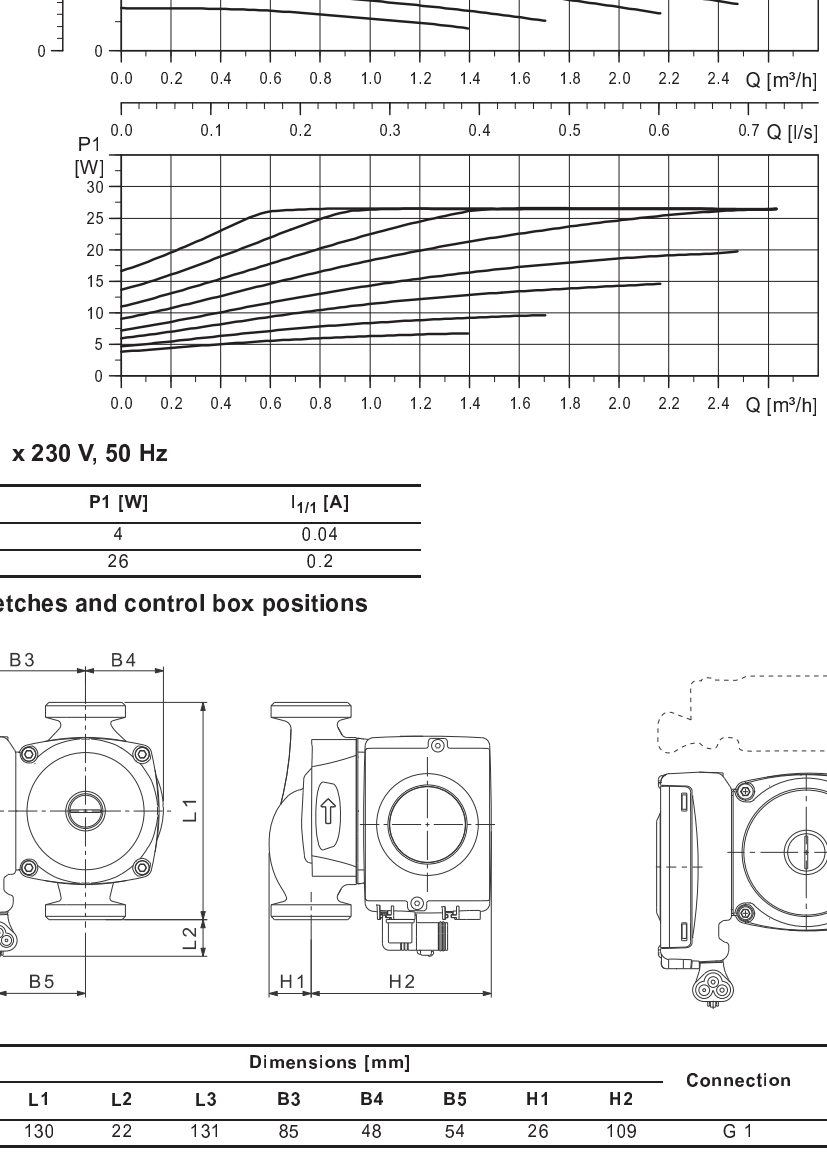

EEI ≤ 0.23

TM04 9514 3710 - TM04 9200 3710

Electrical data, 1 x 230 V, 50 Hz

Speed	P1 [W]	$I_{1/1}$ [A]
Min.	4	0.04
Max.	26	0.2

Dimensional sketches and control box positions

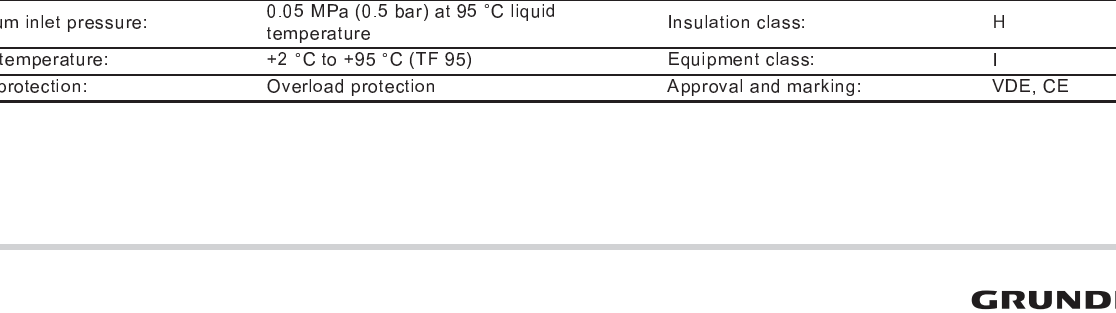

TM05 1400 2711 - TM04 9473 4310

Pump type	Dimensions [mm]								Connection	Net weight [kg]	Quantity per pallet
	L1	L2	L3	B3	B4	B5	H1	H2			
UPM2 15-40	130	22	131	85	48	54	26	109	G 1	2.25	-

Technical data

System pressure:	Max. 1.0 MPa (10 bar)	Enclosure class:	IP44
Minimum inlet pressure:	0.05 MPa (0.5 bar) at 95 °C liquid temperature	Insulation class:	H
Liquid temperature:	+2 °C to +95 °C (TF 95)	Equipment class:	I
Motor protection:	Overload protection	Approval and marking:	VDE, CE

UPM2 25-40 130, 1 x 230 V, 50/60 Hz

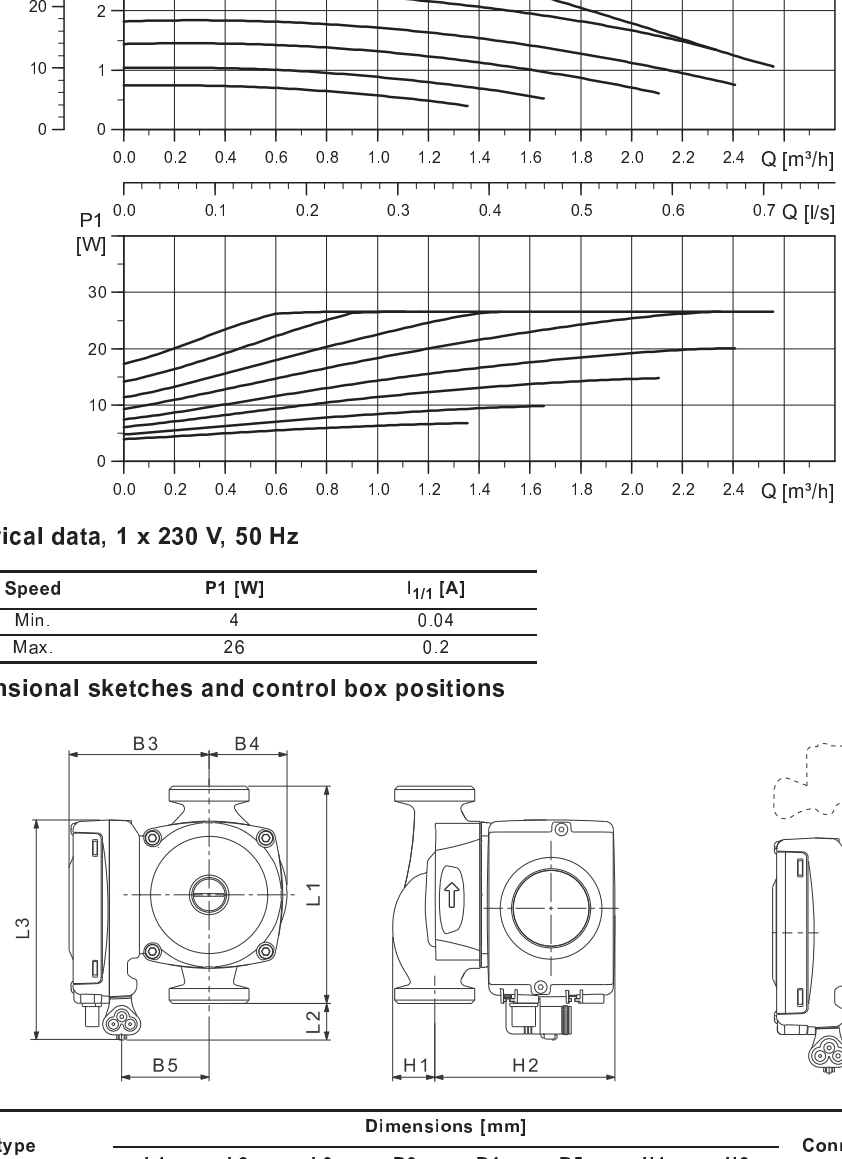

EEI ≤ 0.23

TM04 9519 3710 - TM04 9200 3710

Electrical data, 1 x 230 V, 50 Hz

Speed	P1 [W]	$I_{1/1}$ [A]
Min.	4	0.04
Max.	26	0.2

Dimensional sketches and control box positions

TM05 1400 2711 - TM04 9482 4310

Pump type	Dimensions [mm]								Connection	Net weight [kg]	Quantity per pallet
	L1	L2	L3	B3	B4	B5	H1	H2			
UPM2 25-40	130	22	131	85	48	54	26	109	G 1 1/2	2.45	-

A G 1 1/4 connection is also available on request for UPM2 20-40.

Technical data

System pressure:	Max. 1.0 MPa (10 bar)	Enclosure class:	IP44
Minimum inlet pressure:	0.05 MPa (0.5 bar) at 95 °C liquid temperature	Insulation class:	H
Liquid temperature:	+2 °C to +95 °C (TF 95)	Equipment class:	I
Motor protection:	Overload protection	Approval and marking:	VDE, CE

UPM2 25-40 180, 1 x 230 V, 50/60 Hz

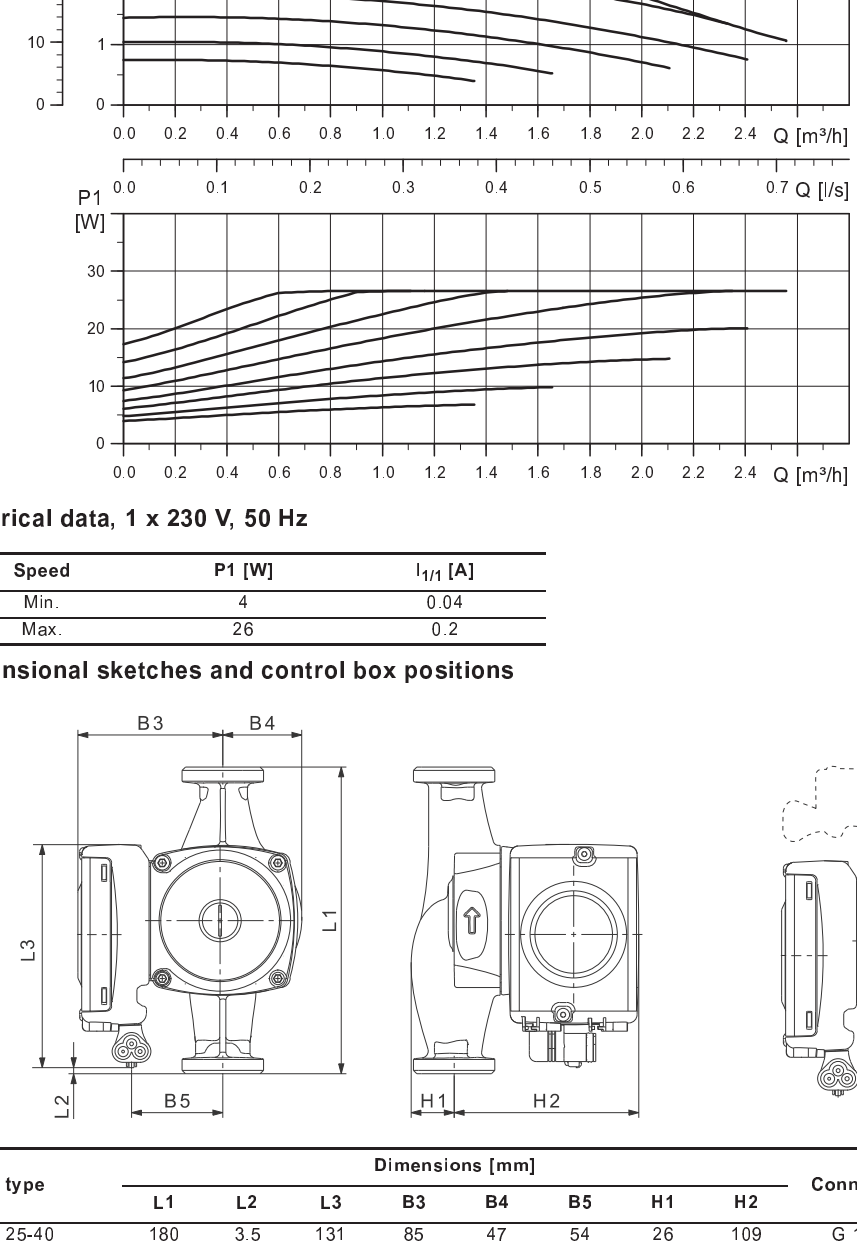

EEI ≤ 0.23

TM04 9519 3710 - TM04 9200 3710

Electrical data, 1 x 230 V, 50 Hz

Speed	P1 [W]	$I_{1/1}$ [A]
Min.	4	0.04
Max.	26	0.2

Dimensional sketches and control box positions

TM04 9212 3810 - TM04 9482 4310

Pump type	Dimensions [mm]								Connection	Net weight [kg]	Quantity per pallet
	L1	L2	L3	B3	B4	B5	H1	H2			
UPM2 25-40	180	3.5	131	85	47	54	26	109	G 1 1/2	2.58	-

Technical data

System pressure:	Max. 1.0 MPa (10 bar)	Enclosure class:	IP44
Minimum inlet pressure:	0.05 MPa (0.5 bar) at 95 °C liquid temperature	Insulation class:	H
Liquid temperature:	+2 °C to +95 °C (TF 95)	Equipment class:	I
Motor protection:	Overload protection	Approval and marking:	VDE, CE

UPM2 32-40 180, 1 x 230 V, 50/60 Hz

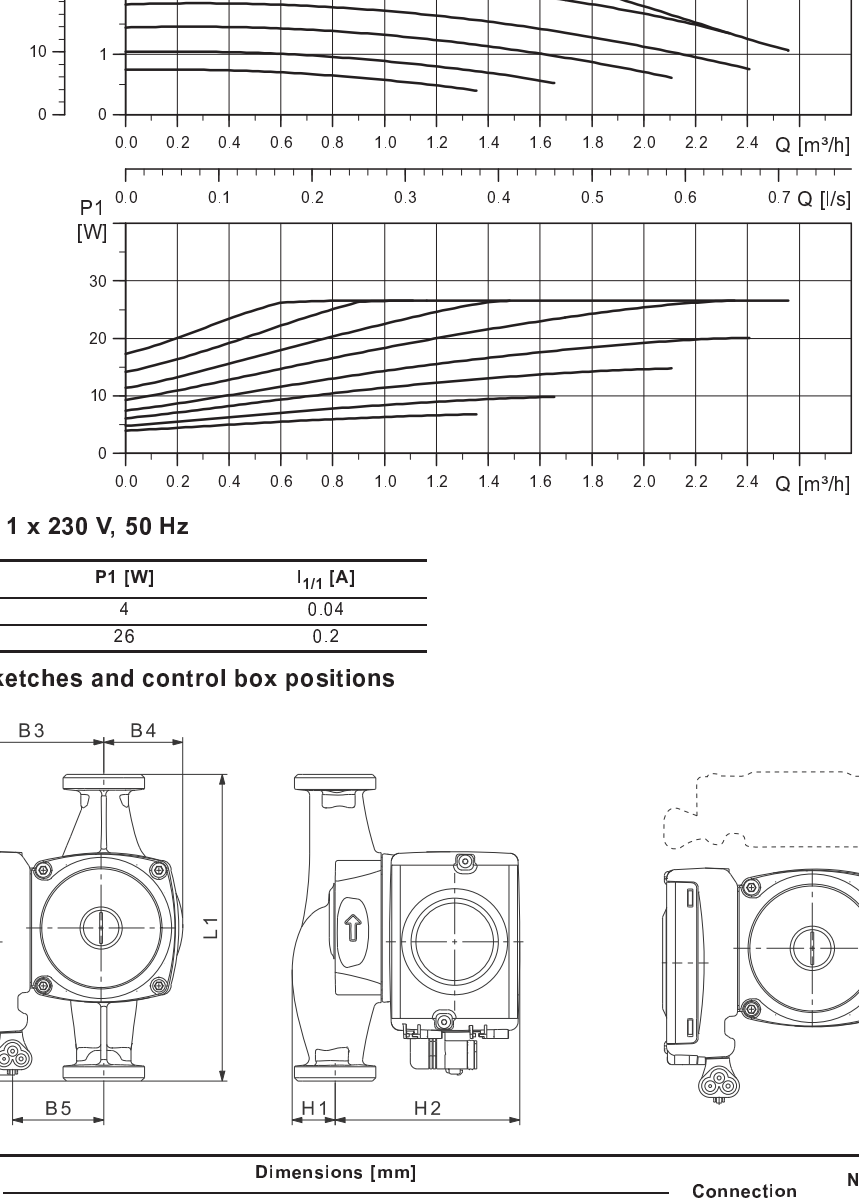

TM05 5335 3612

Electrical data, 1 x 230 V, 50 Hz

Speed	P1 [W]	$I_{1/1}$ [A]
Min.	4	0.04
Max.	26	0.2

Dimensional sketches and control box positions

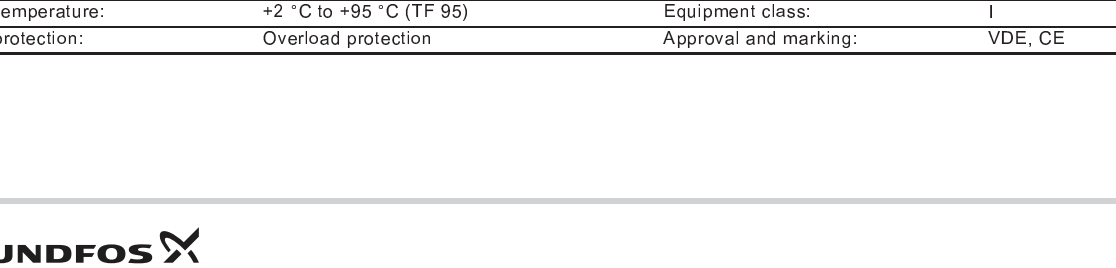

TM04 9212 3810 - TM04 9482 4310

Pump type	Dimensions [mm]								Connection	Net weight [kg]	Quantity per pallet
	L1	L2	L3	B3	B4	B5	H1	H2			
UPM2 32-40	180	3.5	131	85	47	54	30	109	G 2	2.64	-

Technical data

System pressure:	Max. 1.0 MPa (10 bar)	Enclosure class:	IP44
Minimum inlet pressure:	0.05 MPa (0.5 bar) at 95 °C liquid temperature	Insulation class:	H
Liquid temperature:	+2 °C to +95 °C (TF 95)	Equipment class:	I
Motor protection:	Overload protection	Approval and marking:	VDE, CE

UPM2 15-50 130, 1 x 230 V, 50/60 Hz

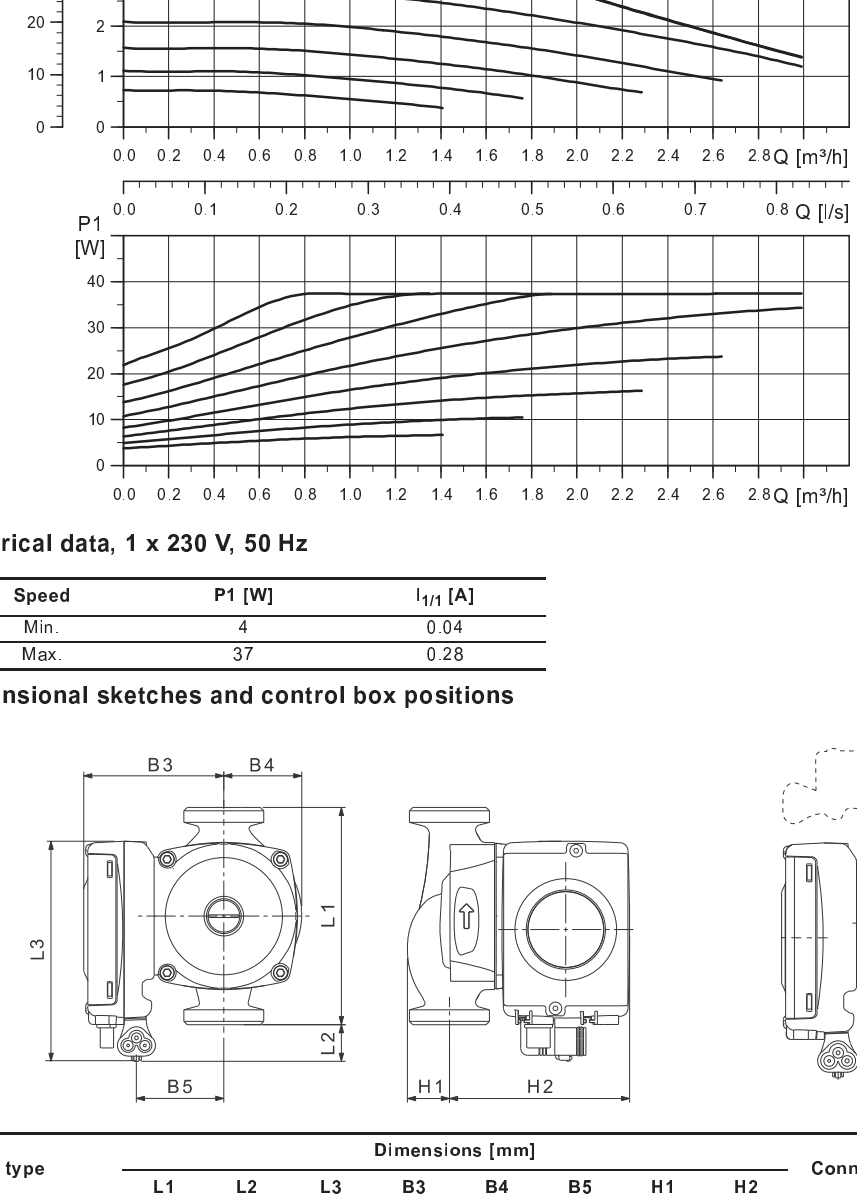

EEI ≤ 0.23

TM04 9515 3710 - TM04 9200 3710

Electrical data, 1 x 230 V, 50 Hz

Speed	P1 [W]	$I_{1/1}$ [A]
Min.	4	0.04
Max.	37	0.28

Dimensional sketches and control box positions

TM05 1400 2711 - TM04 9473 4310

Pump type	Dimensions [mm]								Connection	Net weight [kg]	Quantity per pallet
	L1	L2	L3	B3	B4	B5	H1	H2			
UPM2 15-50	130	22	131	85	48	54	26	109	G 1	2.25	-

Technical data

System pressure:	Max. 1.0 MPa (10 bar)	Enclosure class:	IP44
Minimum inlet pressure:	0.05 MPa (0.5 bar) at 95 °C liquid temperature	Insulation class:	H
Liquid temperature:	+2 °C to +95 °C (TF 95)	Equipment class:	I
Motor protection:	Overload protection	Approval and marking:	VDE, CE

UPM2 25-50 130, 1 x 230 V, 50/60 Hz

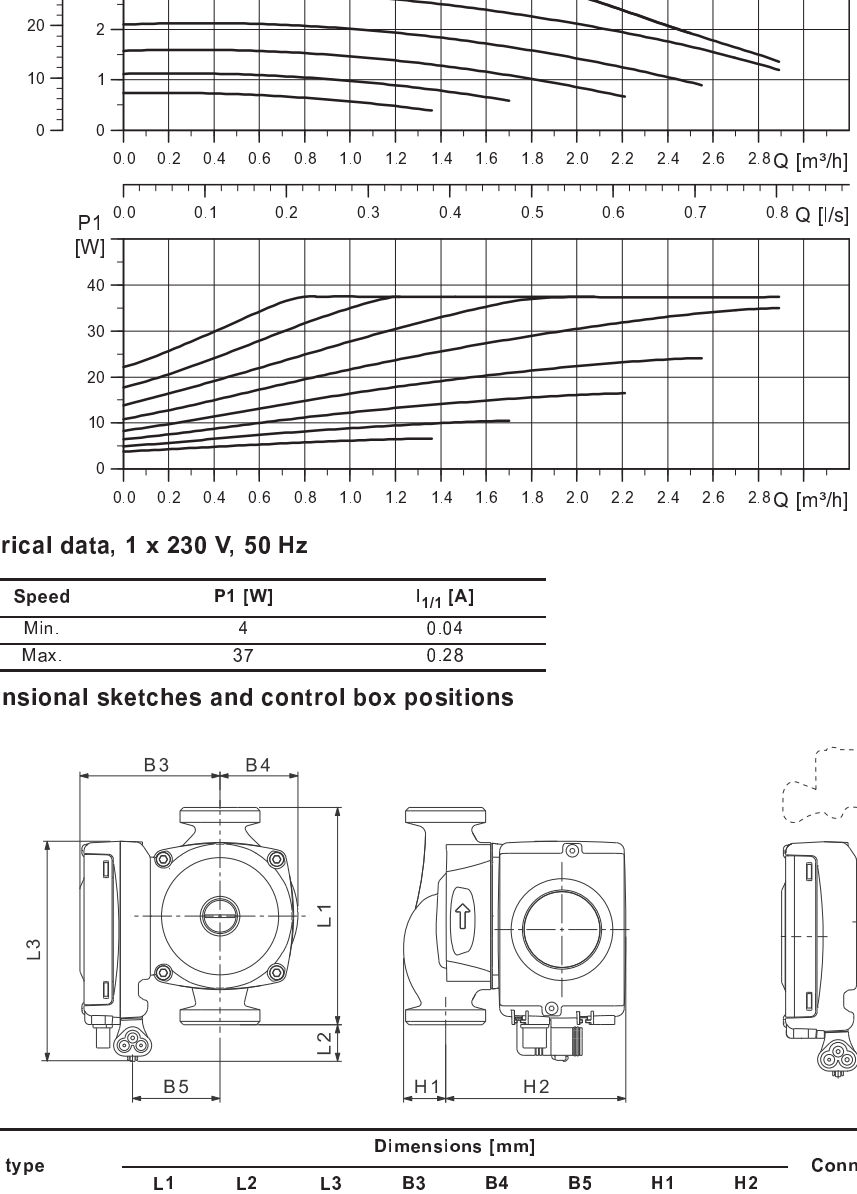

EEI ≤ 0.23

TM04 9520 3710 - TM04 9200 3710

Electrical data, 1 x 230 V, 50 Hz

Speed	P1 [W]	$I_{1/1}$ [A]
Min.	4	0.04
Max.	37	0.28

Dimensional sketches and control box positions

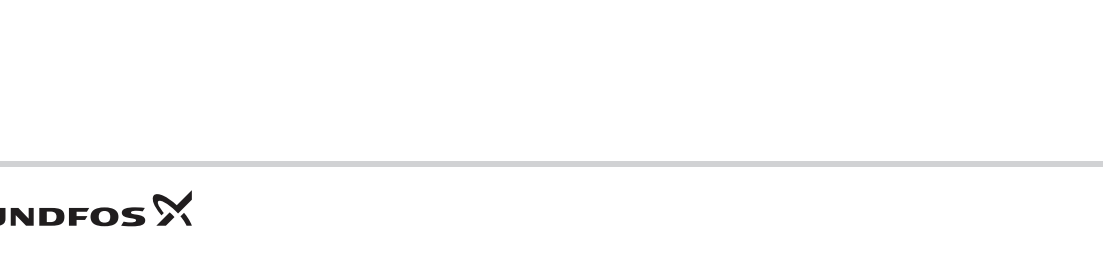

TM05 1400 2711 - TM04 9482 4310

Pump type	Dimensions [mm]								Connection	Net weight [kg]	Quantity per pallet
	L1	L2	L3	B3	B4	B5	H1	H2			
UPM2 25-50	130	22	131	85	48	54	26	109	G 1 1/2	2.45	-

A G 1 1/4 connection is also available on request for UPM2 20-50.

Technical data

System pressure:	Max. 1.0 MPa (10 bar)	Enclosure class:	IP44
Minimum inlet pressure:	0.05 MPa (0.5 bar) at 95 °C liquid temperature	Insulation class:	H
Liquid temperature:	+2 °C to +95 °C (TF 95)	Equipment class:	I
Motor protection:	Overload protection	Approval and marking:	VDE, CE

UPM2 25-50 180, 1 x 230 V, 50/60 Hz

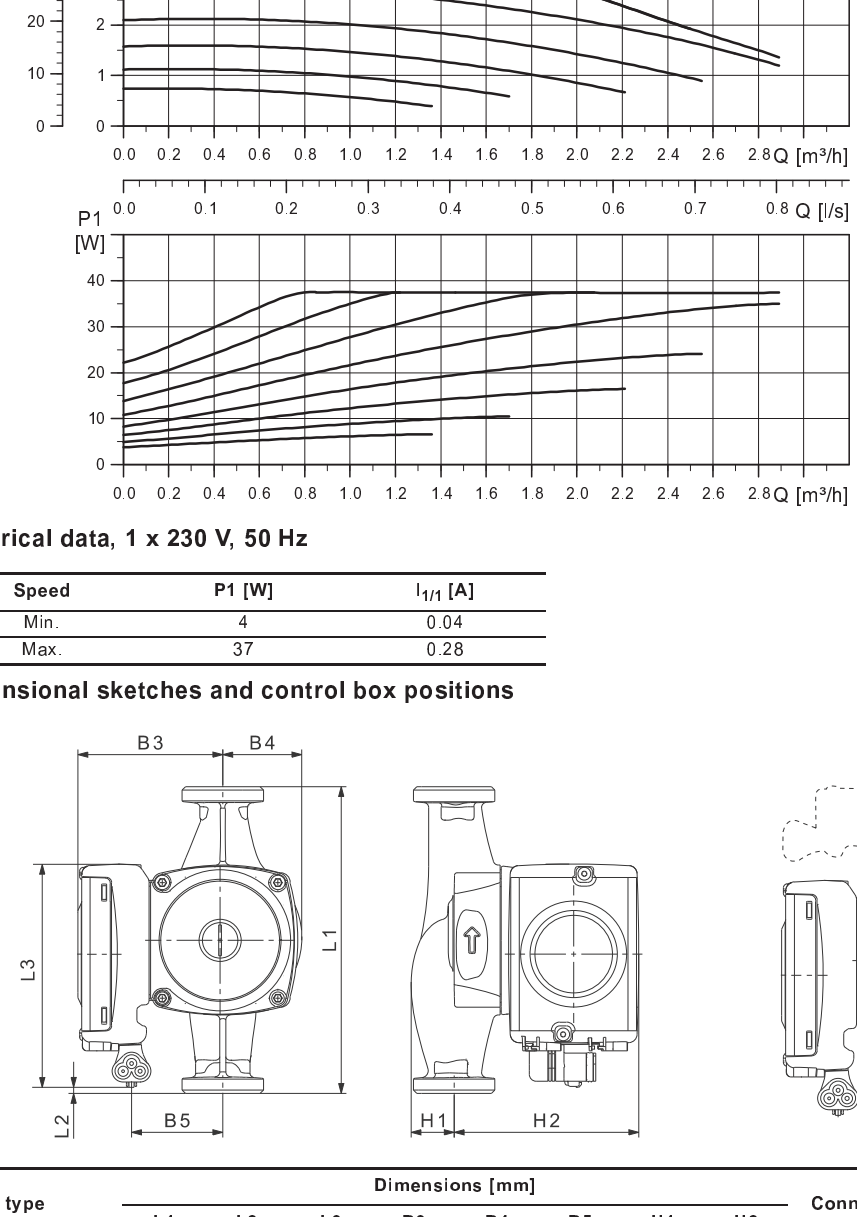

EEI ≤ 0.23

TM04 9520 3710 - TM04 9200 3710

Electrical data, 1 x 230 V, 50 Hz

Speed	P1 [W]	$I_{1/1}$ [A]
Min.	4	0.04
Max.	37	0.28

Dimensional sketches and control box positions

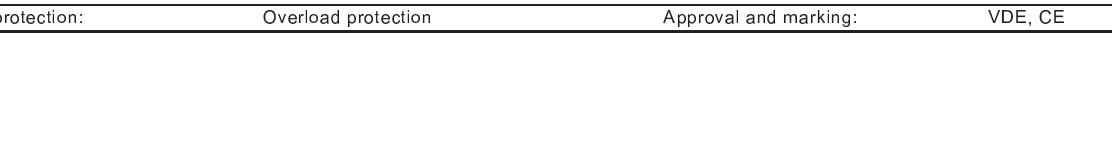

TM04 9212 3810 - TM04 9482 4310

Pump type	Dimensions [mm]								Connection	Net weight [kg]	Quantity per pallet
	L1	L2	L3	B3	B4	B5	H1	H2			
UPM2 25-50	180	3.5	131	85	47	54	26	109	G 1 1/2	2.58	-

Technical data

System pressure:	Max. 1.0 MPa (10 bar)	Enclosure class:	IP44
Minimum inlet pressure:	0.05 MPa (0.5 bar) at 95 °C liquid temperature	Insulation class:	H
Liquid temperature:	+2 °C to +95 °C (TF 95)	Equipment class:	I
Motor protection:	Overload protection	Approval and marking:	VDE, CE

UPM2 32-50 180, 1 x 230 V, 50/60 Hz

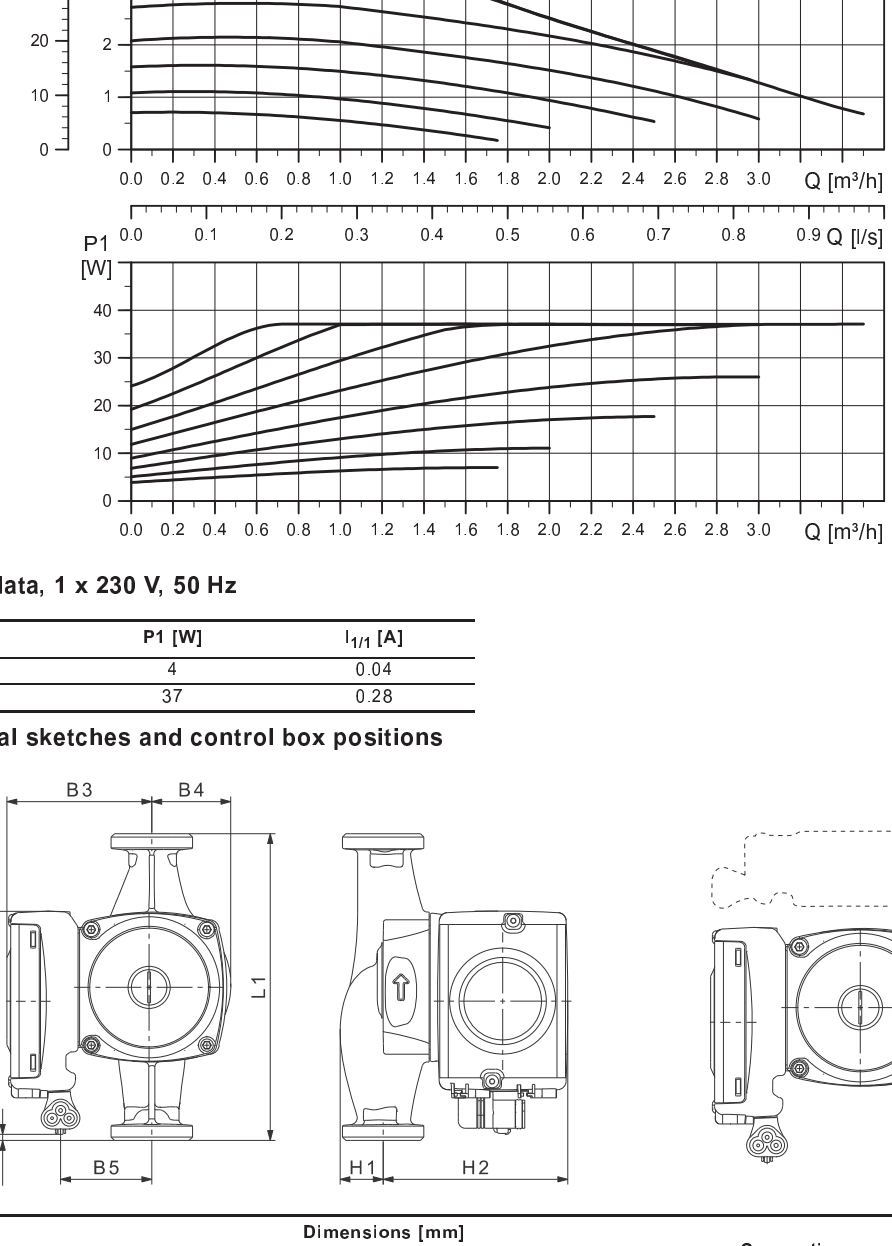

EEI ≤ 0.23

TM05 5335 3612

Electrical data, 1 x 230 V, 50 Hz

Speed	P1 [W]	$I_{1/1}$ [A]
Min.	4	0.04
Max.	37	0.28

Dimensional sketches and control box positions

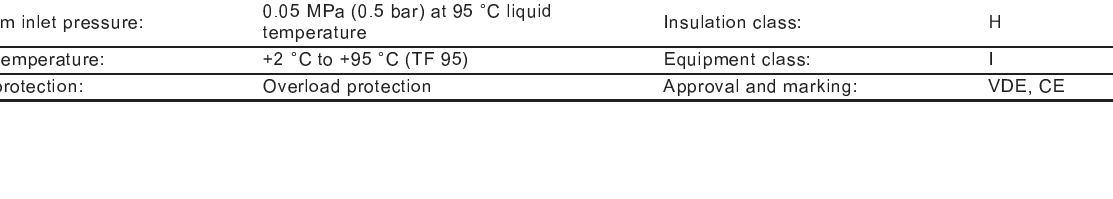

TM04 9212 3810 - TM04 9482 4310

Pump type	Dimensions [mm]								Connection	Net weight [kg]	Quantity per pallet
	L1	L2	L3	B3	B4	B5	H1	H2			
UPM2 32-50	180	3.5	131	85	47	54	30	109	G 2	2.64	-

Technical data

System pressure:	Max. 1.0 MPa (10 bar)	Enclosure class:	IP44
Minimum inlet pressure:	0.05 MPa (0.5 bar) at 95 °C liquid temperature	Insulation class:	H
Liquid temperature:	+2 °C to +95 °C (TF 95)	Equipment class:	I
Motor protection:	Overload protection	Approval and marking:	VDE, CE

UPM2 15-60 130, 1 x 230 V, 50/60 Hz

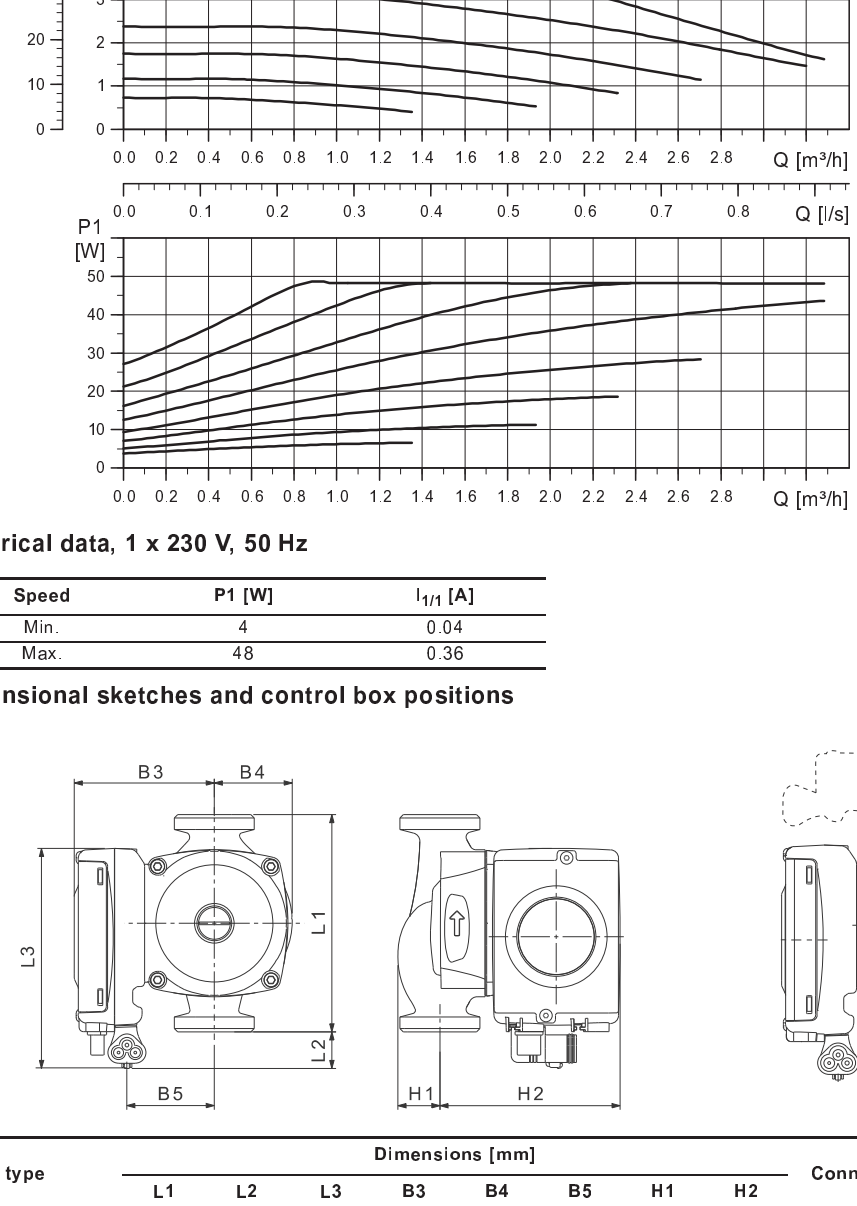

EEI ≤ 0.23

TM04 9516 3710 - TM04 9200 3710

Electrical data, 1 x 230 V, 50 Hz

Speed	P1 [W]	$I_{1/1}$ [A]
Min.	4	0.04
Max.	48	0.36

Dimensional sketches and control box positions

TM05 1400 2711 - TM04 9482 4310

Pump type	Dimensions [mm]								Connection	Net weight [kg]	Quantity per pallet
	L1	L2	L3	B3	B4	B5	H1	H2			
UPM2 15-60	130	22	131	85	48	54	26	109	G 1	2.25	-

A G 1 1/4 connection is also available on request for UPM2 20-60.

Technical data

System pressure:	Max. 1.0 MPa (10 bar)	Enclosure class:	IP44
Minimum inlet pressure:	0.05 MPa (0.5 bar) at 95 °C liquid temperature	Insulation class:	H
Liquid temperature:	+2 °C to +95 °C (TF 95)	Equipment class:	I
Motor protection:	Overload protection	Approval and marking:	VDE, CE

UPM2 25-60 130, 1 x 230 V, 50/60 Hz

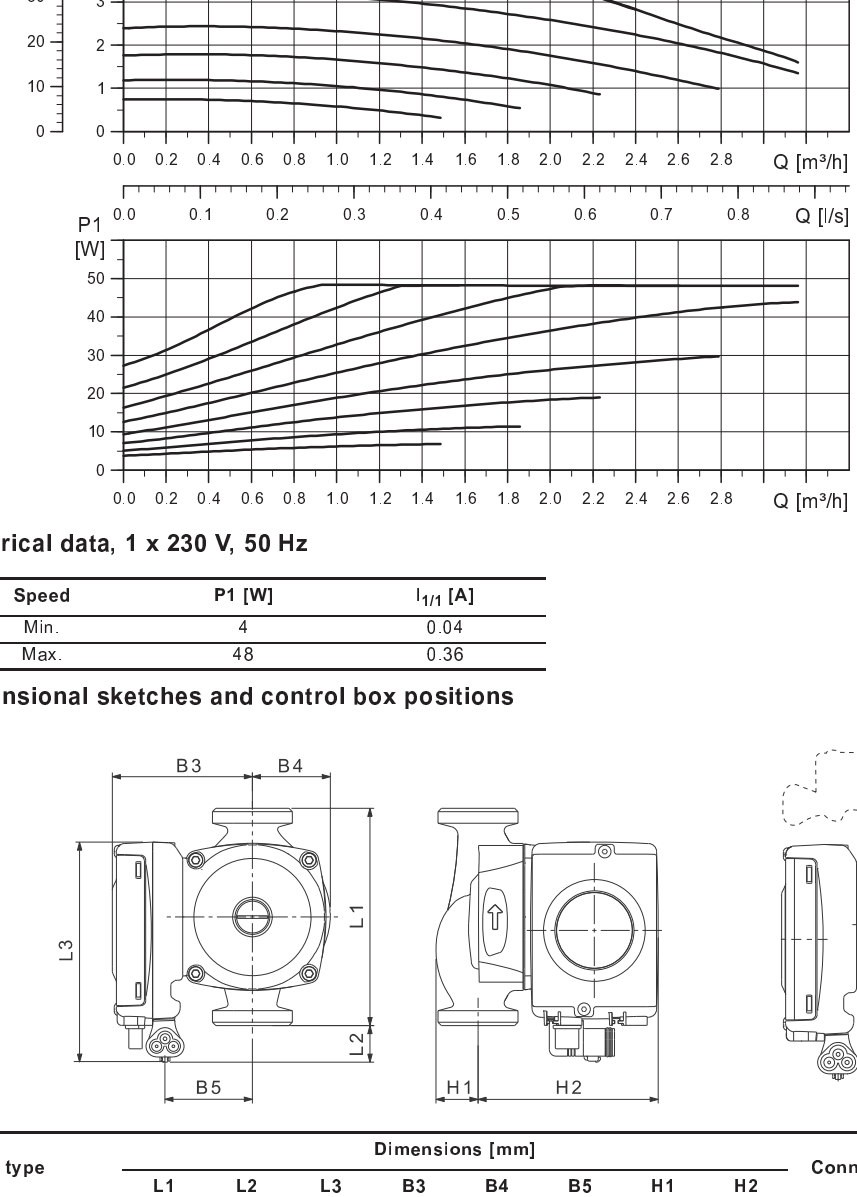

EEI ≤ 0.23

TM04 9521 3710 - TM04 9200 3710

Electrical data, 1 x 230 V, 50 Hz

Speed	P1 [W]	$I_{1/1}$ [A]
Min.	4	0.04
Max.	48	0.36

Dimensional sketches and control box positions

TM05 1400 2711 - TM04 9482 4310

Pump type	Dimensions [mm]								Connection	Net weight [kg]	Quantity per pallet
	L1	L2	L3	B3	B4	B5	H1	H2			
UPM2 25-60	130	22	131	85	48	54	26	109	G 1 1/2	2.45	-

Technical data

System pressure:	Max. 1.0 MPa (10 bar)	Enclosure class:	IP44
Minimum inlet pressure:	0.05 MPa (0.5 bar) at 95 °C liquid temperature	Insulation class:	H
Liquid temperature:	+2 °C to +95 °C (TF 95)	Equipment class:	I
Motor protection:	Overload protection	Approval and marking:	VDE, CE

UPM2 25-60 180, 1 x 230 V, 50/60 Hz

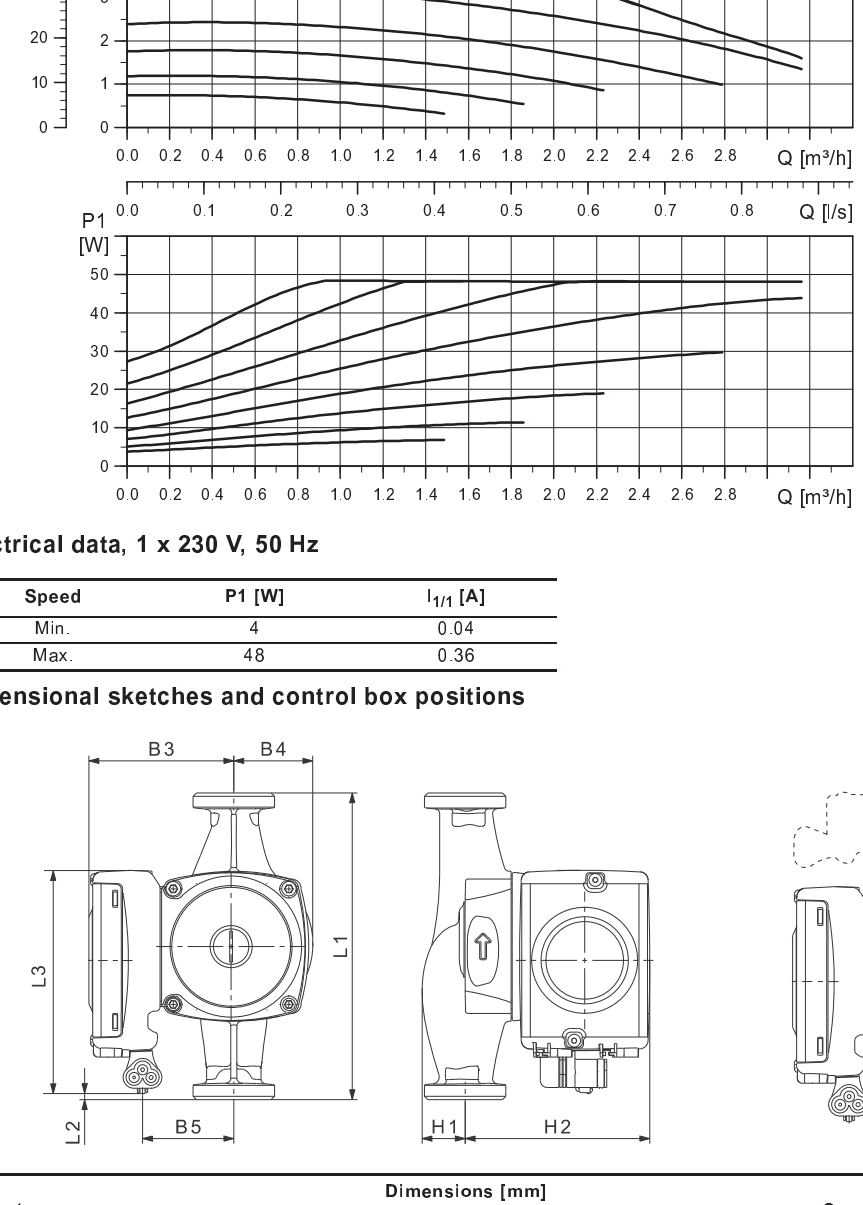

EEI ≤ 0.23

TM04 9521 3710 - TM04 9200 3710

Electrical data, 1 x 230 V, 50 Hz

Speed	P1 [W]	$I_{1/1}$ [A]
Min.	4	0.04
Max.	48	0.36

Dimensional sketches and control box positions

TM04 9212 3810 - TM04 9482 4310

Pump type	Dimensions [mm]								Connection	Net weight [kg]	Quantity per pallet
	L1	L2	L3	B3	B4	B5	H1	H2			
UPM2 25-60	180	3.5	131	85	47	54	26	109	G 1 1/2	2.58	-

Technical data

System pressure:	Max. 1.0 MPa (10 bar)	Enclosure class:	IP44
Minimum inlet pressure:	0.05 MPa (0.5 bar) at 95 °C liquid temperature	Insulation class:	H
Liquid temperature:	+2 °C to +95 °C (TF 95)	Equipment class:	I
Motor protection:	Overload protection	Approval and marking:	VDE, CE

UPM2 32-60 180, 1 x 230 V, 50/60 Hz

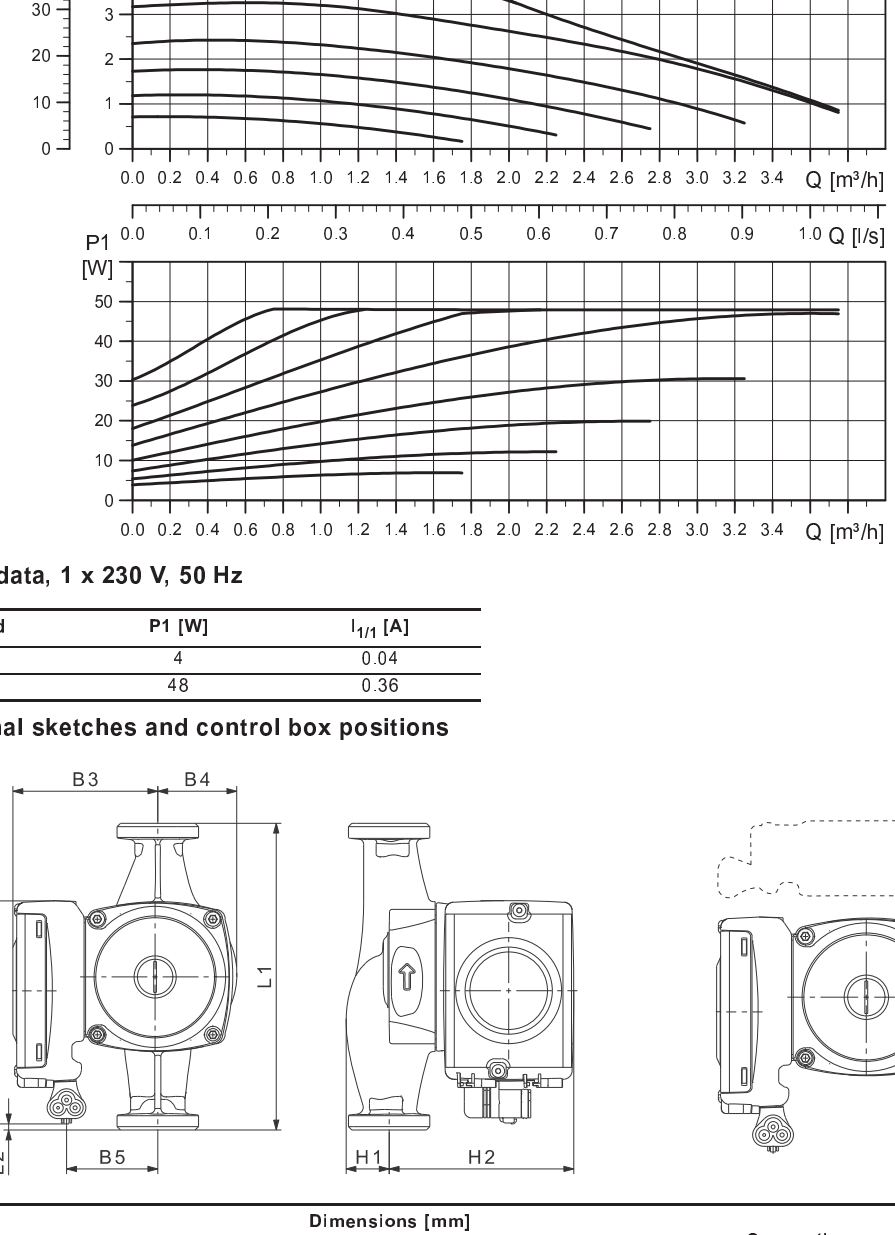

EEI ≤ 0.23

TM05 5336 3612

Electrical data, 1 x 230 V, 50 Hz

Speed	P1 [W]	$I_{1/1}$ [A]
Min.	4	0.04
Max.	48	0.36

Dimensional sketches and control box positions

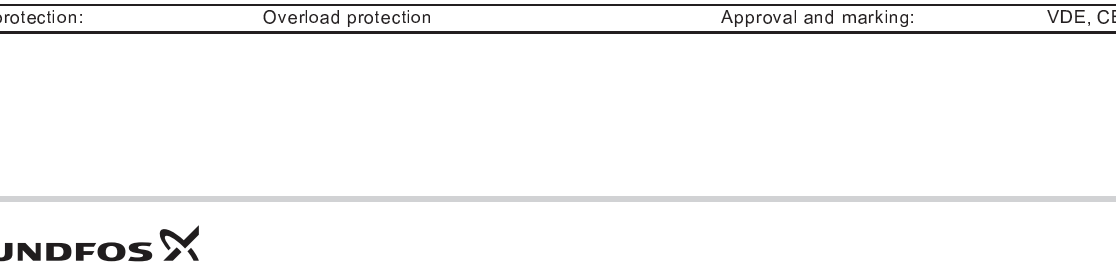

TM04 9212 3810 - TM04 9482 4310

Pump type	Dimensions [mm]								Connection	Net weight [kg]	Quantity per pallet
	L1	L2	L3	B3	B4	B5	H1	H2			
UPM2 32-60	180	3.5	131	85	47	54	30	109	G 2	2.64	-

Technical data

System pressure:	Max. 1.0 MPa (10 bar)	Enclosure class:	IP44
Minimum inlet pressure:	0.05 MPa (0.5 bar) at 95 °C liquid temperature	Insulation class:	H
Liquid temperature:	+2 °C to +95 °C (TF 95)	Equipment class:	I
Motor protection:	Overload protection	Approval and marking:	VDE, CE

UPM2 15-70 130, 1 x 230 V, 50/60 Hz

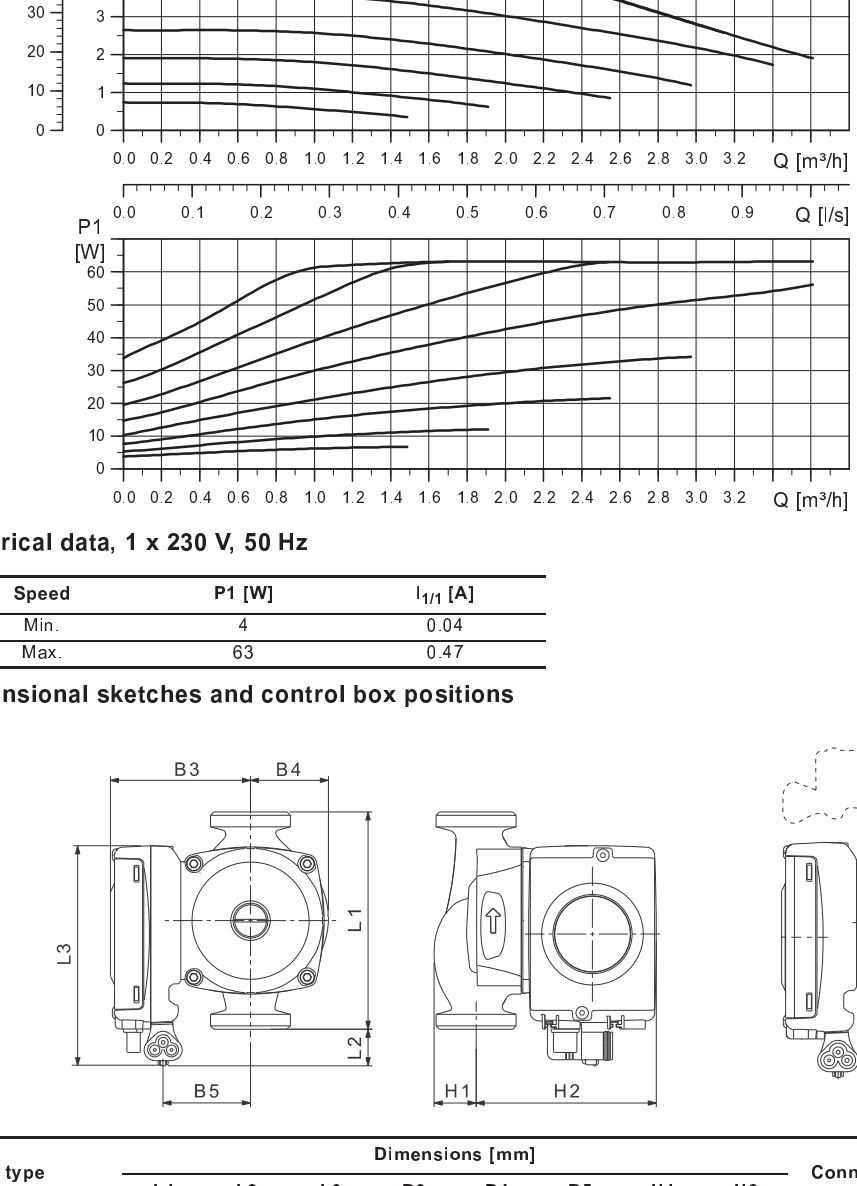

EEI ≤ 0.23

TM04 9517 3710 - TM04 9200 3710

Electrical data, 1 x 230 V, 50 Hz

Speed	P1 [W]	$I_{1/1}$ [A]
Min.	4	0.04
Max.	63	0.47

Dimensional sketches and control box positions

TM05 1400 2711 - TM04 9482 4310

Pump type	Dimensions [mm]								Connection	Net weight [kg]	Quantity per pallet
	L1	L2	L3	B3	B4	B5	H1	H2			
UPM2 15-70	130	22	131	85	48	54	26	109	G 1	2.25	-

Technical data

System pressure:	Max. 1.0 MPa (10 bar)	Enclosure class:	IP44
Minimum inlet pressure:	0.05 MPa (0.5 bar) at 95 °C liquid temperature	Insulation class:	H
Liquid temperature:	+2 °C to +95 °C (TF 95)	Equipment class:	I
Motor protection:	Overload protection	Approval and marking:	VDE, CE

UPM2 25-70 130, 1 x 230 V, 50/60 Hz

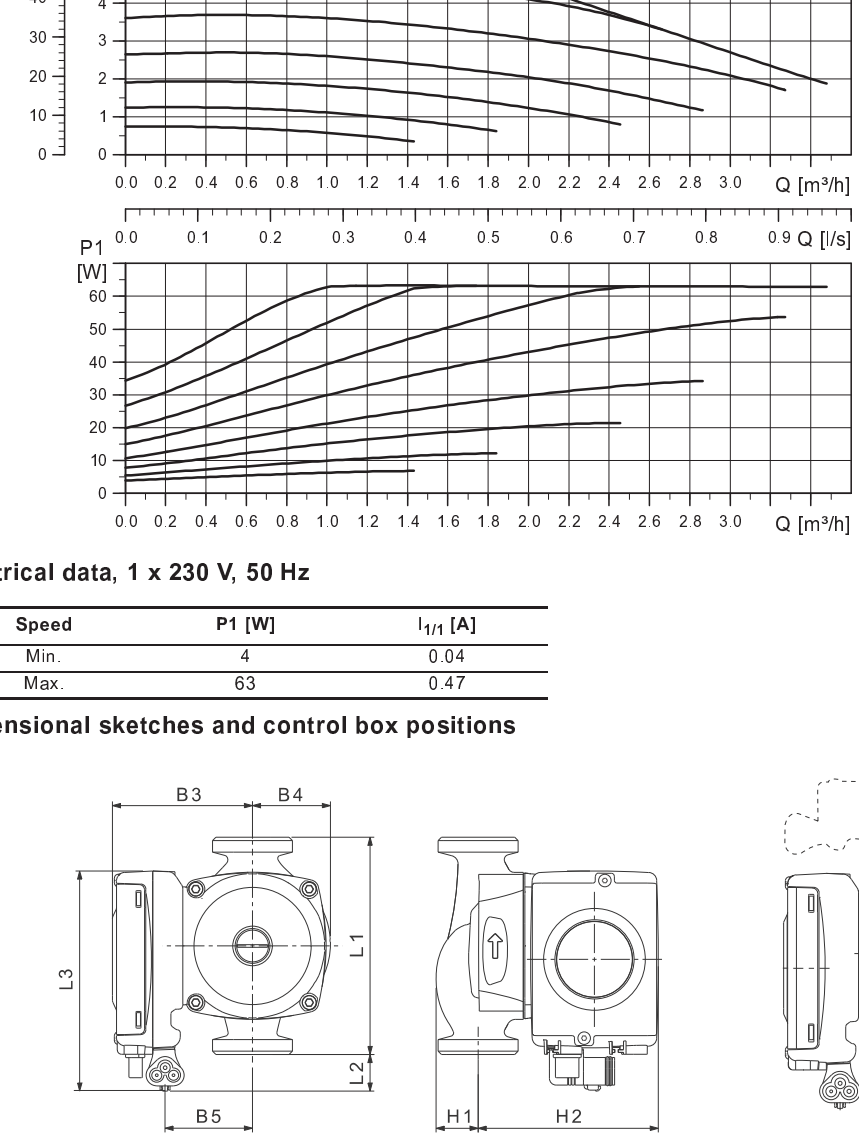

EEI ≤ 0.23

TM04 9522 3710 - TM04 9200 3710

Electrical data, 1 x 230 V, 50 Hz

Speed	P1 [W]	$I_{1/1}$ [A]
Min.	4	0.04
Max.	63	0.47

Dimensional sketches and control box positions

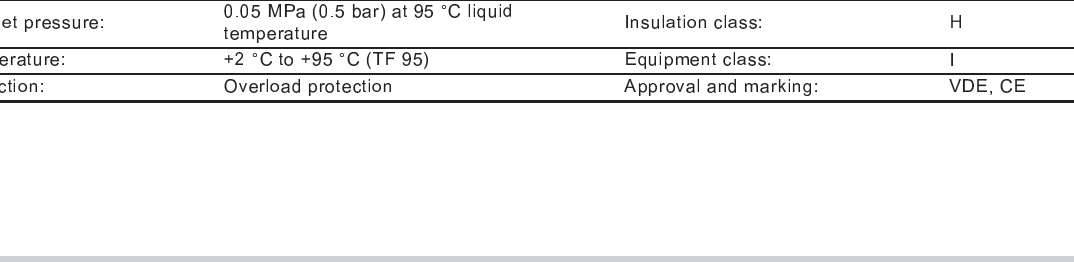

TM05 1400 2711 - TM04 9482 4310

Pump type	Dimensions [mm]								Connection	Net weight [kg]	Quantity per pallet
	L1	L2	L3	B3	B4	B5	H1	H2			
UPM2 25-70	130	22	131	85	48	54	26	109	G 1 1/2	2.45	-

A G 1 1/4 connection is also available on request for UPM2 20-70.

Technical data

System pressure:	Max. 1.0 MPa (10 bar)	Enclosure class:	IP44
Minimum inlet pressure:	0.05 MPa (0.5 bar) at 95 °C liquid temperature	Insulation class:	H
Liquid temperature:	+2 °C to +95 °C (TF 95)	Equipment class:	I
Motor protection:	Overload protection	Approval and marking:	VDE, CE

UPM2 25-70 180, 1 x 230 V, 50/60 Hz

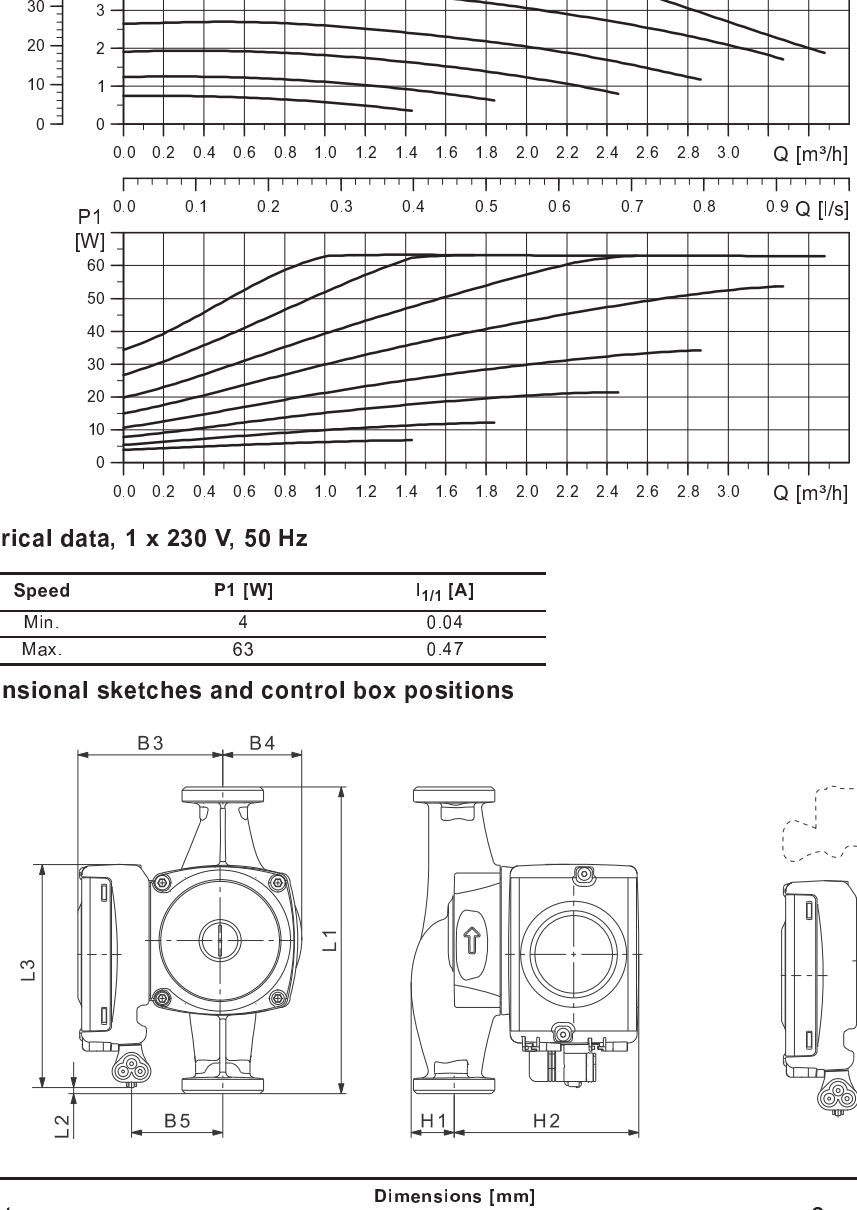

EEI ≤ 0.23

TM04 9522 3710 - TM04 9200 3710

Electrical data, 1 x 230 V, 50 Hz

Speed	P1 [W]	$I_{1/1}$ [A]
Min.	4	0.04
Max.	63	0.47

Dimensional sketches and control box positions

TM04 9212 3810 - TM04 9482 4310

Pump type	Dimensions [mm]								Connection	Net weight [kg]	Quantity per pallet
	L1	L2	L3	B3	B4	B5	H1	H2			
UPM2 25-70	180	3.5	131	85	47	54	26	109	G 1 1/2	2.58	-

Technical data

System pressure:	Max. 1.0 MPa (10 bar)	Enclosure class:	IP44
Minimum inlet pressure:	0.05 MPa (0.5 bar) at 95 °C liquid temperature	Insulation class:	H
Liquid temperature:	+2 °C to +95 °C (TF 95)	Equipment class:	I
Motor protection:	Overload protection	Approval and marking:	VDE, CE

UPM2 32-70 180, 1 x 230 V, 50/60 Hz

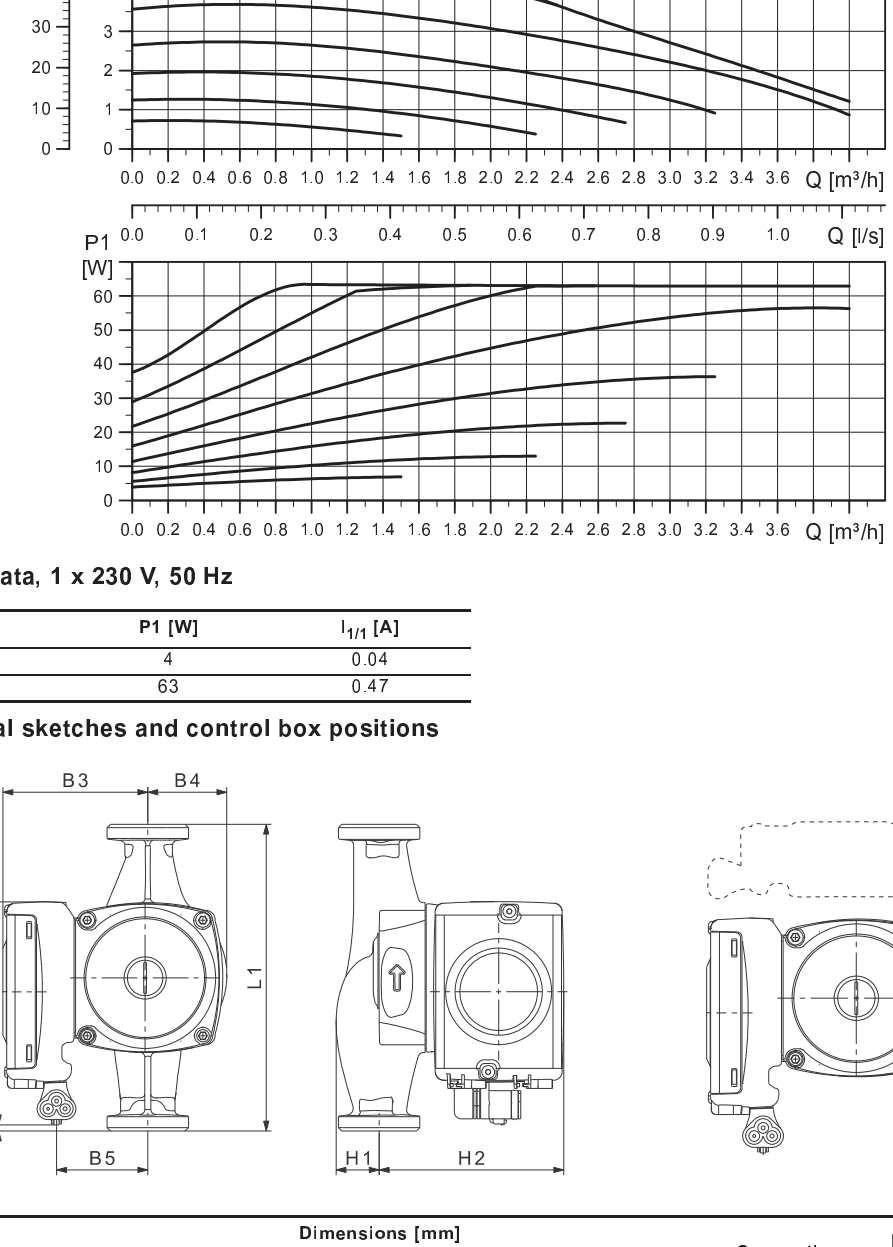

EEI ≤ 0.23

TM05 5337 3612

Electrical data, 1 x 230 V, 50 Hz

Speed	P1 [W]	$I_{1/1}$ [A]
Min.	4	0.04
Max.	63	0.47

Dimensional sketches and control box positions

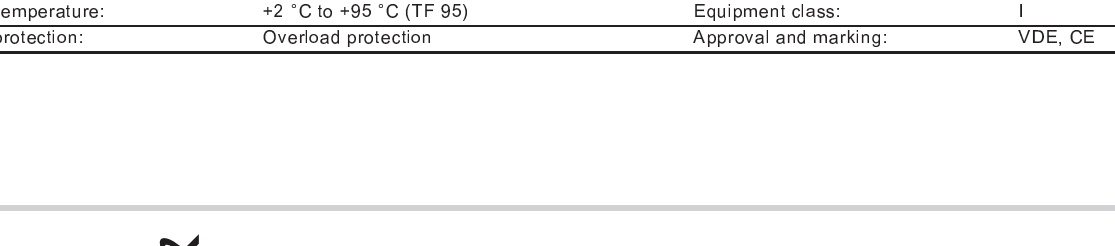

TM04 9212 3810 - TM04 9482 4310

Pump type	Dimensions [mm]								Connection	Net weight [kg]	Quantity per pallet
	L1	L2	L3	B3	B4	B5	H1	H2			
UPM2 32-70	180	3.5	131	85	47	54	30	109	G 2	2.64	-

Technical data

System pressure:	Max. 1.0 MPa (10 bar)	Enclosure class:	IP44
Minimum inlet pressure:	0.05 MPa (0.5 bar) at 95 °C liquid temperature	Insulation class:	H
Liquid temperature:	+2 °C to +95 °C (TF 95)	Equipment class:	I
Motor protection:	Overload protection	Approval and marking:	VDE, CE

UPM2 15-75 130, 1 x 230 V, 50/60 Hz

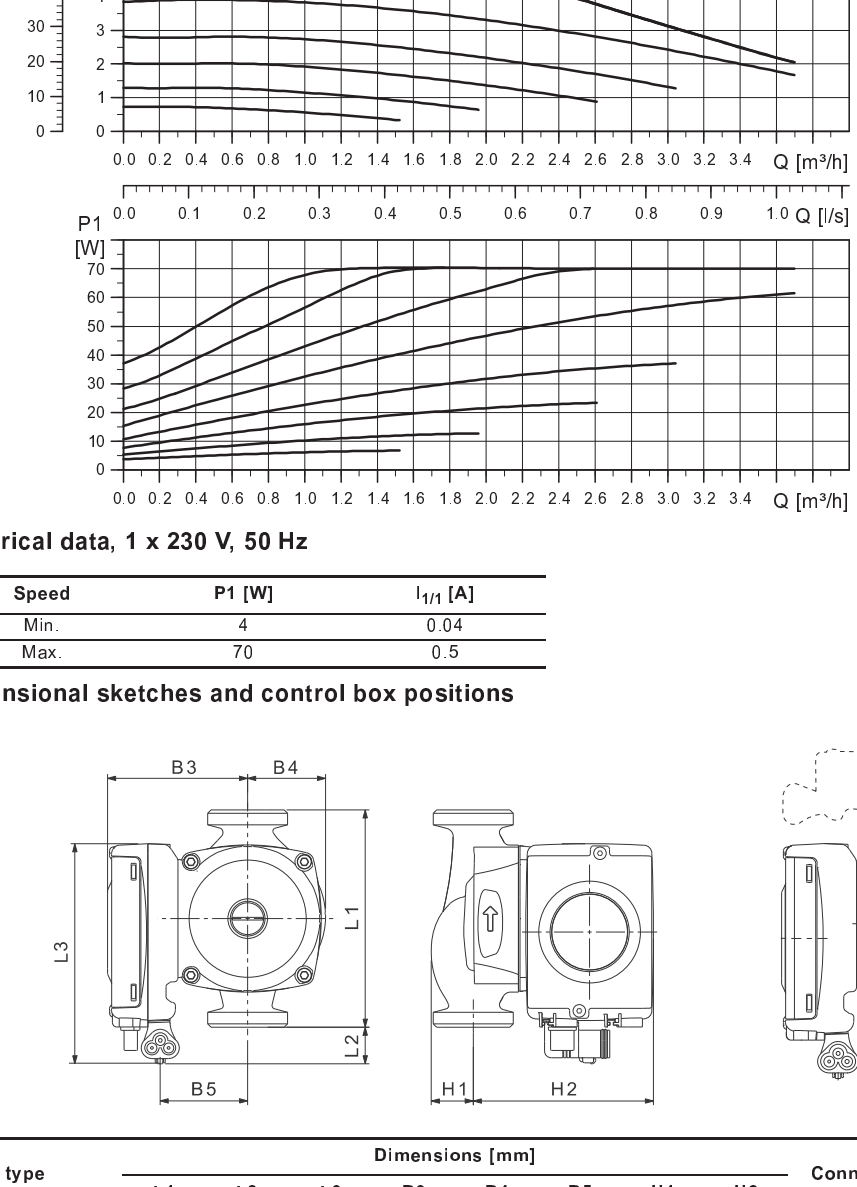

EEI ≤ 0.23

TM04 9518 3710 - TM04 9200 3710

Electrical data, 1 x 230 V, 50 Hz

Speed	P1 [W]	$I_{1/1}$ [A]
Min.	4	0.04
Max.	70	0.5

Dimensional sketches and control box positions

TM05 1400 2711 - TM04 9482 4310

Pump type	Dimensions [mm]								Connection	Net weight [kg]	Quantity per pallet
	L1	L2	L3	B3	B4	B5	H1	H2			
UPM2 15-75	130	22	131	85	46	54	26	109	G 1	2.25	-

Technical data

System pressure:	Max. 1.0 MPa (10 bar)	Enclosure class:	IP44
Minimum inlet pressure:	0.05 MPa (0.5 bar) at 95 °C liquid temperature	Insulation class:	H
Liquid temperature:	+2 °C to +95 °C (TF 95)	Equipment class:	I
Motor protection:	Overload protection	Approval and marking:	VDE, CE

UPM2 25-75 130, 1 x 230 V, 50/60 Hz

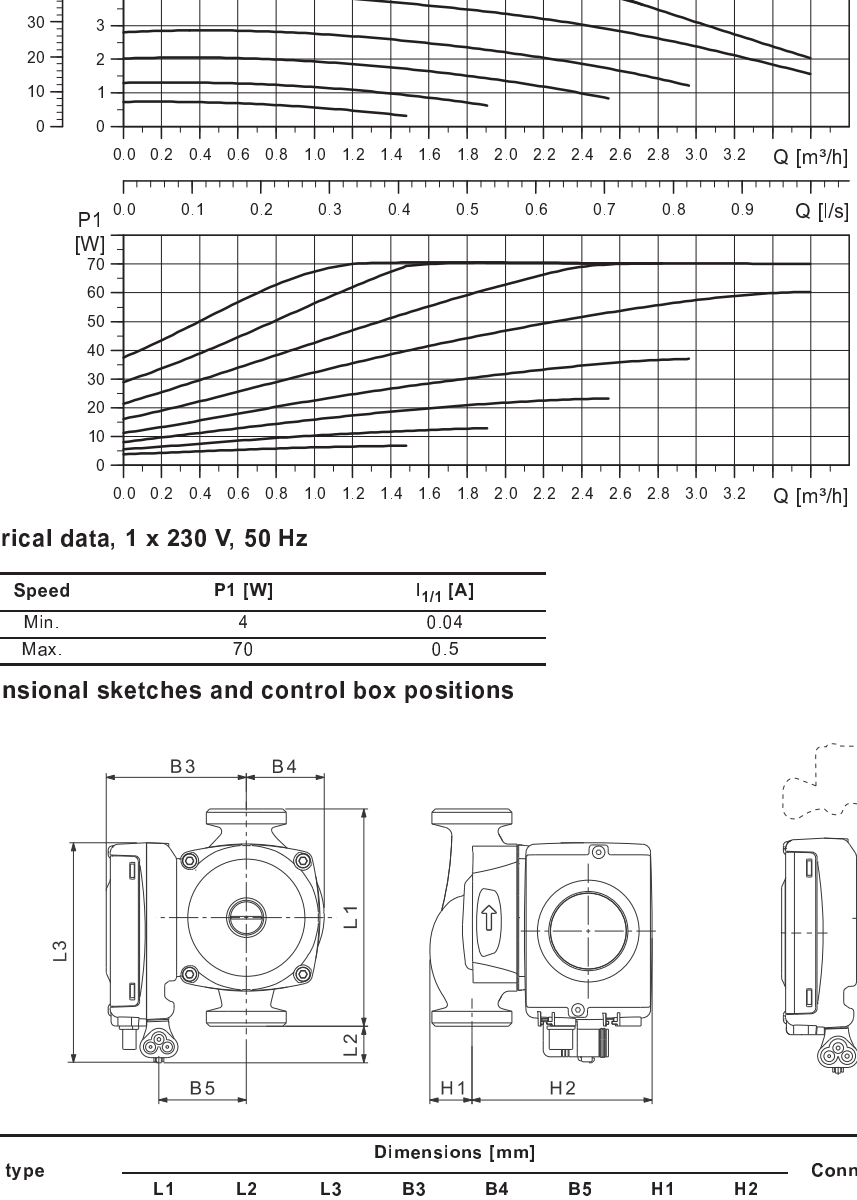

EEI ≤ 0.23

TM04 9523 3710 - TM04 9200 3710

Electrical data, 1 x 230 V, 50 Hz

Speed	P1 [W]	$I_{1/1}$ [A]
Min.	4	0.04
Max.	70	0.5

Dimensional sketches and control box positions

TM05 1400 2711 - TM04 9482 4310

Pump type	Dimensions [mm]								Connection	Net weight [kg]	Quantity per pallet
	L1	L2	L3	B3	B4	B5	H1	H2			
UPM2 25-75	130	22	131	85	46	54	26	109	G 1 1/2	2.45	-

A G 1 1/4 connection is also available on request for UPM2 20-75.

Technical data

System pressure:	Max. 1.0 MPa (10 bar)	Enclosure class:	IP44
Minimum inlet pressure:	0.05 MPa (0.5 bar) at 95 °C liquid temperature	Insulation class:	H
Liquid temperature:	+2 °C to +95 °C (TF 95)	Equipment class:	I
Motor protection:	Overload protection	Approval and marking:	VDE, CE

UPM2 25-75 180, 1 x 230 V, 50/60 Hz

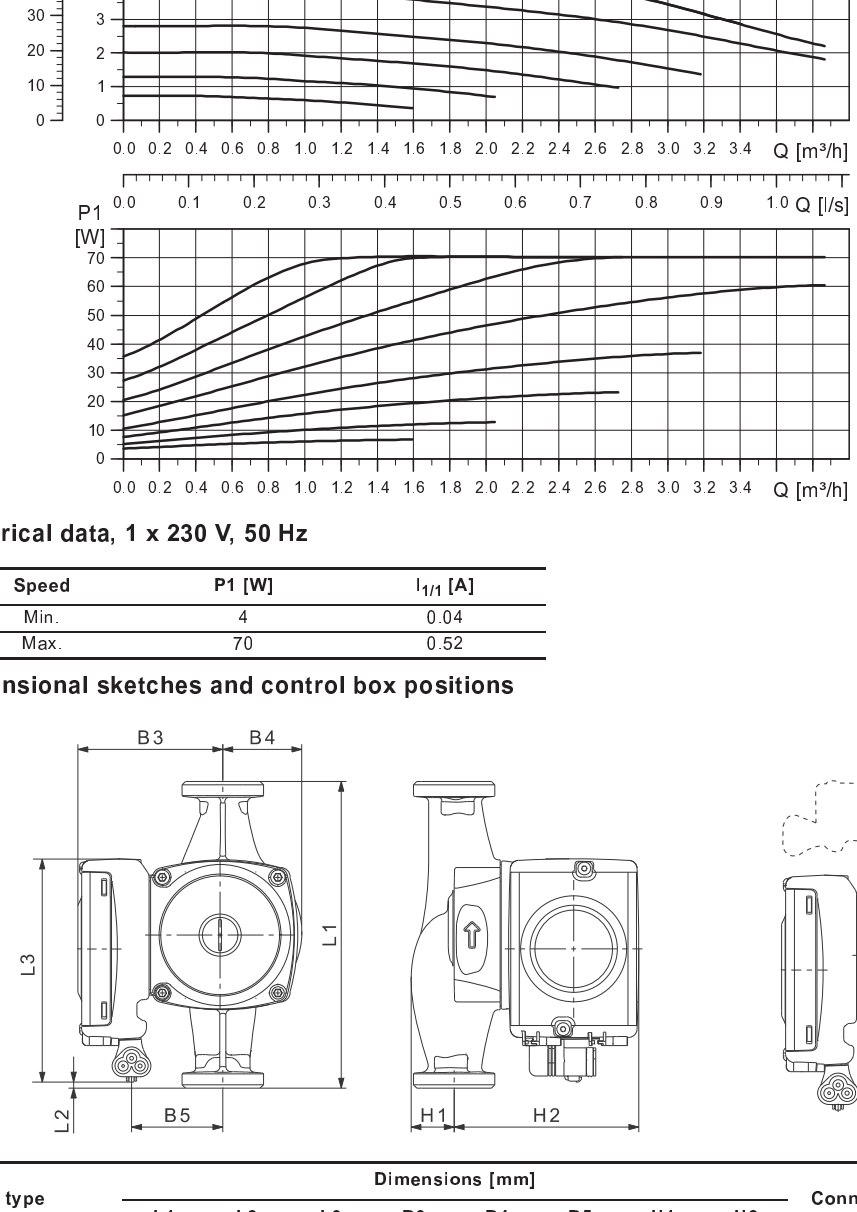

EEI ≤ 0.23

TM04 9524 3710 - TM04 9200 3710

Electrical data, 1 x 230 V, 50 Hz

Speed	P1 [W]	$I_{1/1}$ [A]
Min.	4	0.04
Max.	70	0.52

Dimensional sketches and control box positions

TM04 9212 3810 - TM04 9482 4310

Pump type	Dimensions [mm]								Connection	Net weight [kg]	Quantity per pallet
	L1	L2	L3	B3	B4	B5	H1	H2			
UPM2 25-75	180	3.5	131	85	46	54	26	109	G 1 1/2	2.58	-

Technical data

System pressure:	Max. 1.0 MPa (10 bar)	Enclosure class:	IP44
Minimum inlet pressure:	0.05 MPa (0.5 bar) at 95 °C liquid temperature	Insulation class:	H
Liquid temperature:	+2 °C to +95 °C (TF 95)	Equipment class:	I
Motor protection:	Overload protection	Approval and marking:	VDE, CE

UPM GEO 25-85 130, 1 x 230 V, 50/60 Hz

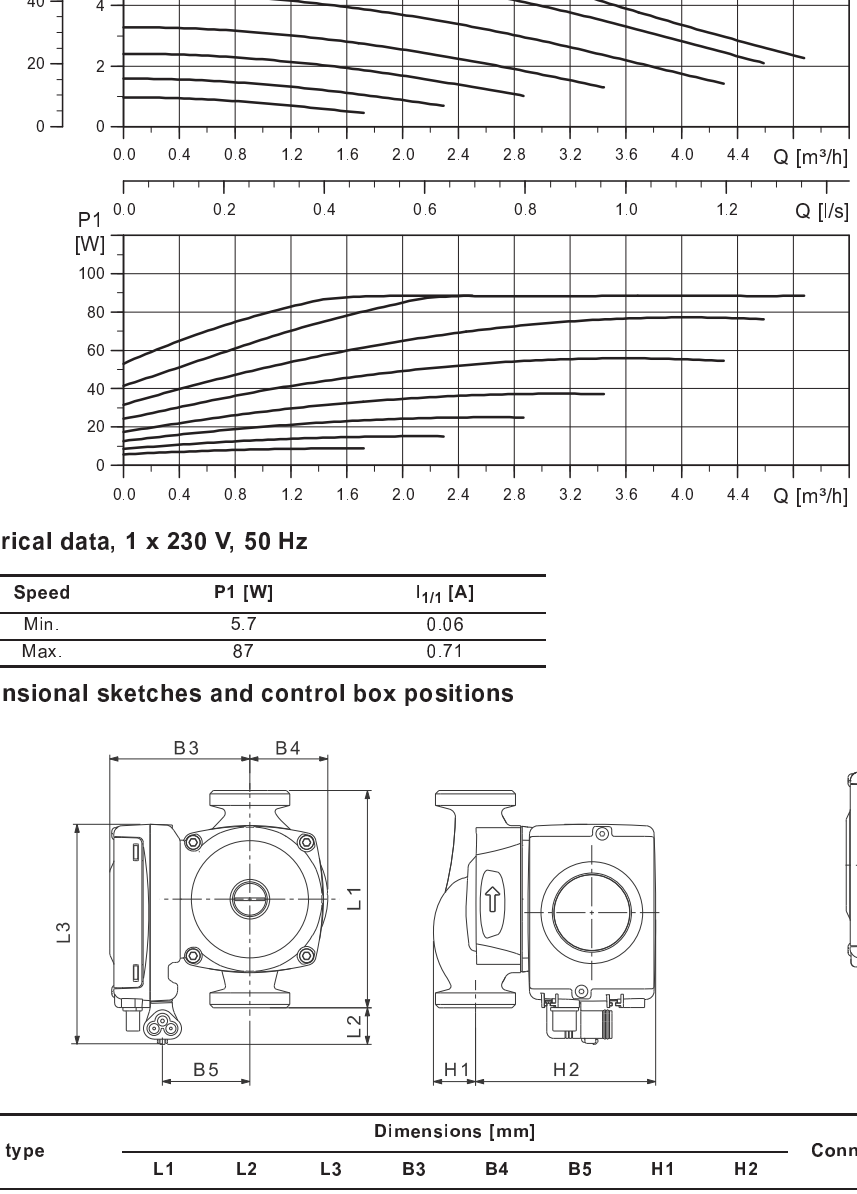

EEI ≤ 0.23

TM04 9525 3710 - TM04 9200 3710

Electrical data, 1 x 230 V, 50 Hz

Speed	P1 [W]	$I_{1/1}$ [A]
Min.	5.7	0.06
Max.	87	0.71

Dimensional sketches and control box positions

TM05 1400 2711 - TM04 9776 0111

Pump type	Dimensions [mm]								Connection	Net weight [kg]	Quantity per pallet
	L1	L2	L3	B3	B4	B5	H1	H2			
UPM GEO 25-85	130	22	131	95	50	64	27	114	G 1 1/2	2.5	-

Technical data

System pressure:	Max. 1.0 MPa (10 bar)	Enclosure class:	IPX4D
Minimum inlet pressure:	0.05 MPa (0.5 bar) at 95 °C liquid temperature	Insulation class:	H
Liquid temperature:	-10 °C to +95 °C (TF 95)	Equipment class:	I
Motor protection:	Overload protection	Approval and marking:	VDE, CE

UPM GEO 25-85 180, 1 x 230 V, 50/60 Hz

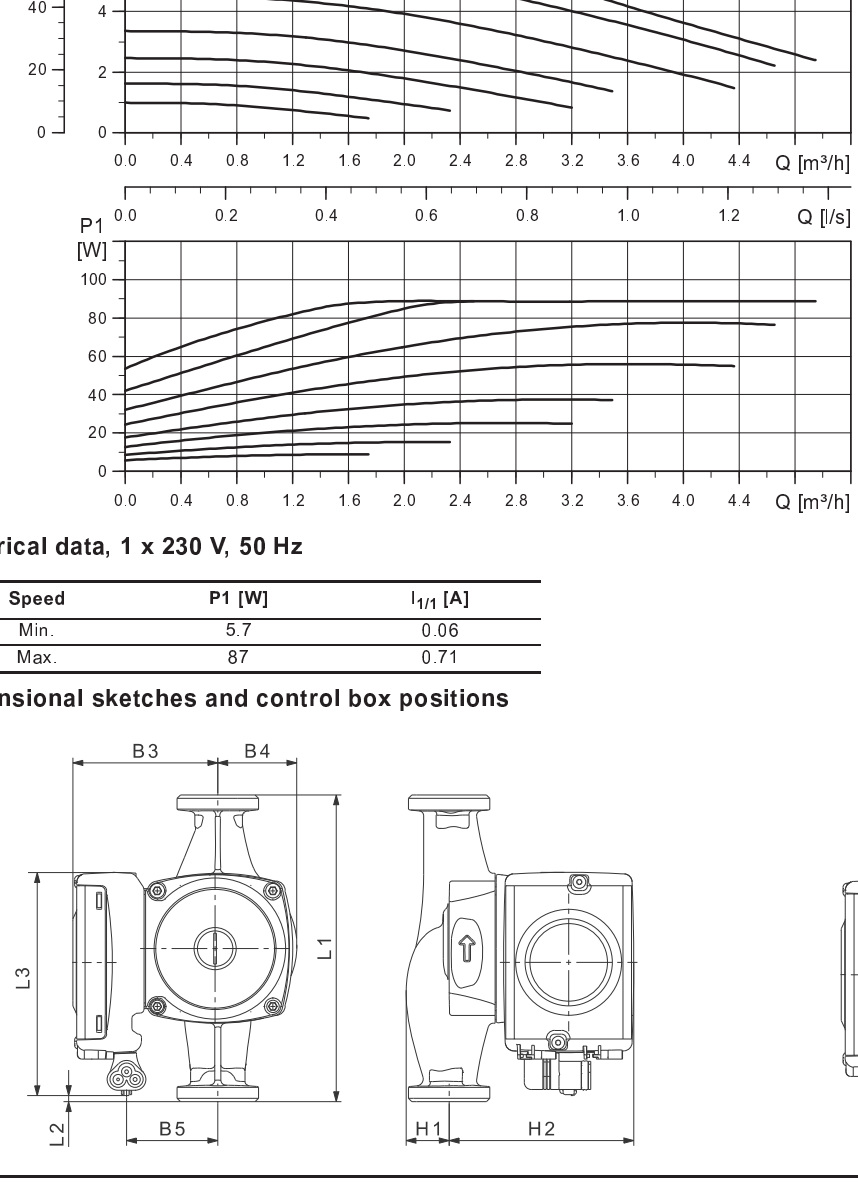

EEI ≤ 0.23

TM04 9526 3710 - TM04 9200 3710

Electrical data, 1 x 230 V, 50 Hz

Speed	P1 [W]	$I_{1/1}$ [A]
Min.	5.7	0.06
Max.	87	0.71

Dimensional sketches and control box positions

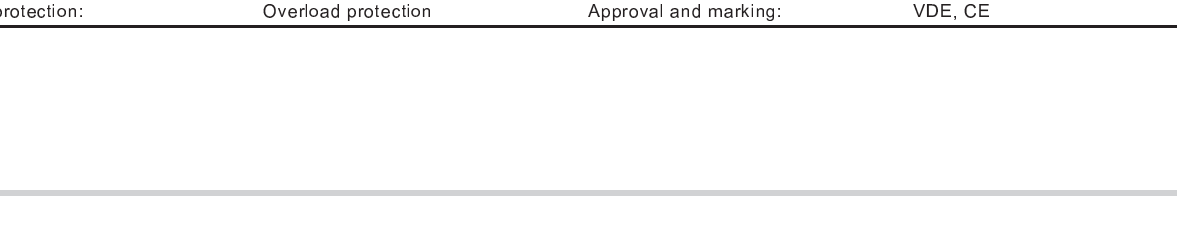

TM04 9212 3810 - TM04 9776 0111

Pump type	Dimensions [mm]								Connection	Net weight [kg]	Quantity per pallet
	L1	L2	L3	B3	B4	B5	H1	H2			
UPM GEO 25-85	180	3.5	131	95	50	64	38	104	G 1 1/2	2.6	-

Technical data

System pressure:	Max. 1.0 MPa (10 bar)	Enclosure class:	IPX4D
Minimum inlet pressure:	0.05 MPa (0.5 bar) at 95 °C liquid temperature	Insulation class:	H
Liquid temperature:	-10 °C to +95 °C (TF 95)	Equipment class:	I
Motor protection:	Overload protection	Approval and marking:	VDE, CE

UPM GEO 25-85 N 180, 1 x 230 V, 50/60 Hz

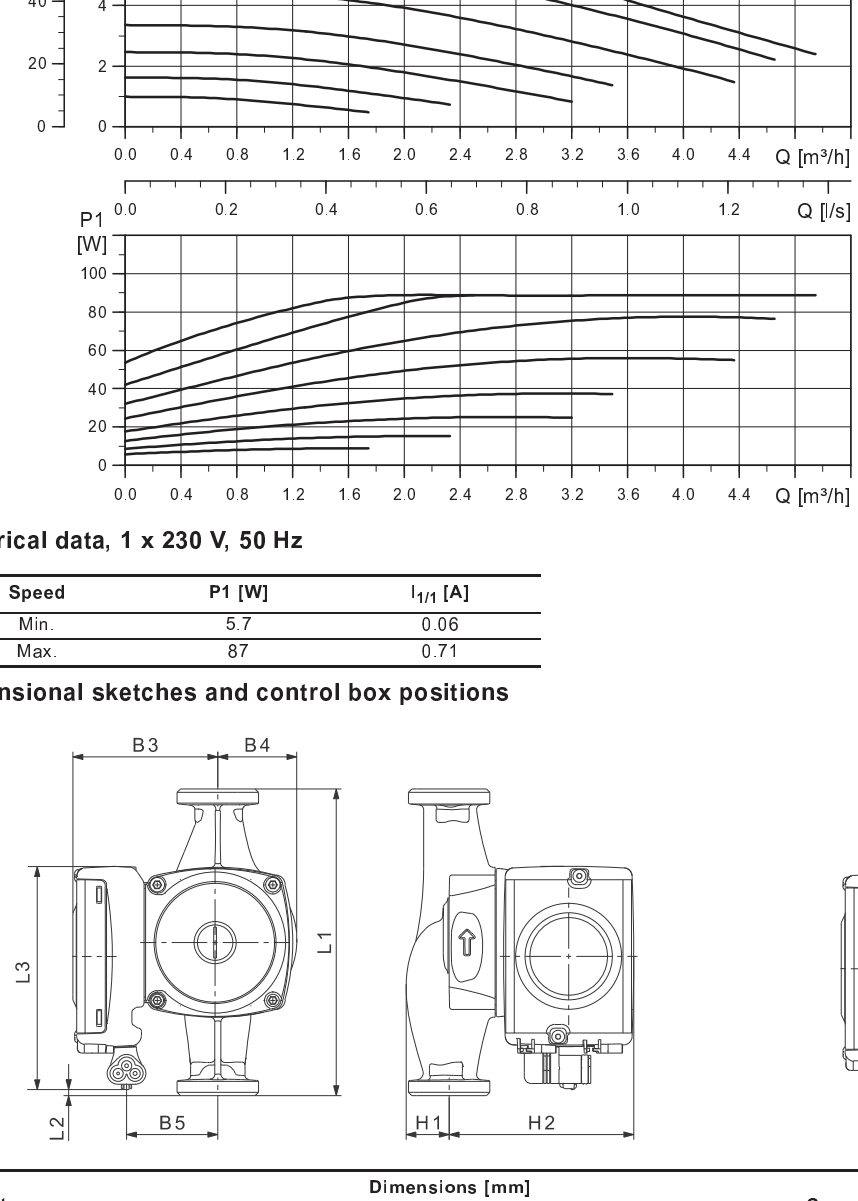

EEI ≤ 0.23

TM04 9526 3710 - TM04 9200 3710

Electrical data, 1 x 230 V, 50 Hz

Speed	P1 [W]	$I_{1/1}$ [A]
Min.	5.7	0.06
Max.	87	0.71

Dimensional sketches and control box positions

TM04 9212 3810 - TM04 9776 0111

Pump type	Dimensions [mm]								Connection	Net weight [kg]	Quantity per pallet
	L1	L2	L3	B3	B4	B5	H1	H2			
UPM GEO 25-85 N	180	3.5	131	95	50	64	38	104	G 1 1/2	2.5	100

Technical data

System pressure:	Max. 1.0 MPa (10 bar)	Enclosure class:	IPX4D
Minimum inlet pressure:	0.05 MPa (0.5 bar) at 95 °C liquid temperature	Insulation class:	H
Liquid temperature:	-10 °C to +95 °C (TF 95)	Equipment class:	I
Motor protection:	Overload protection	Approval and marking:	VDE, CE

UPM GEO 32-85 180, 1 x 230 V, 50/60 Hz

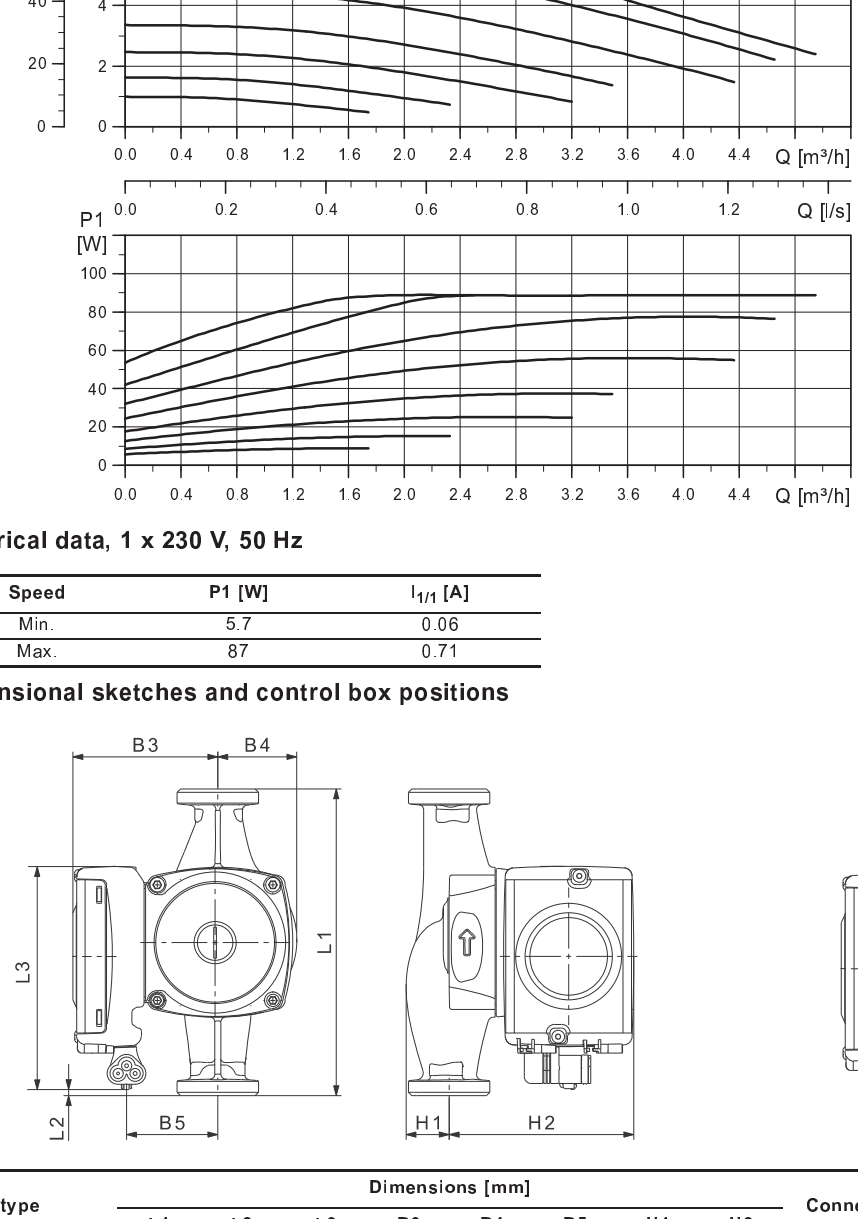

EEI ≤ 0.23

TM04 9526 3710 - TM04 9200 3710

Electrical data, 1 x 230 V, 50 Hz

Speed	P1 [W]	$I_{1/1}$ [A]
Min.	5.7	0.06
Max.	87	0.71

Dimensional sketches and control box positions

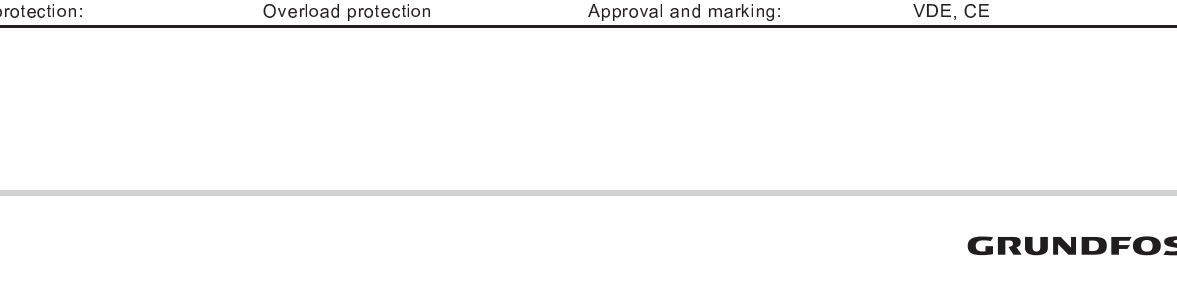

TM04 9212 3810 - TM04 9776 0111

Pump type	Dimensions [mm]								Connection	Net weight [kg]	Quantity per pallet
	L1	L2	L3	B3	B4	B5	H1	H2			
UPM GEO 32-85	180	3.5	131	95	50	64	38	104	G 2	2.7	-

Technical data

System pressure:	Max. 1.0 MPa (10 bar)	Enclosure class:	IPX4D
Minimum inlet pressure:	0.05 MPa (0.5 bar) at 95 °C liquid temperature	Insulation class:	H
Liquid temperature:	-10 °C to +95 °C (TF 95)	Equipment class:	I
Motor protection:	Overload protection	Approval and marking:	VDE, CE

UPM2K 15-40 130, 1 x 230 V, 50/60 Hz

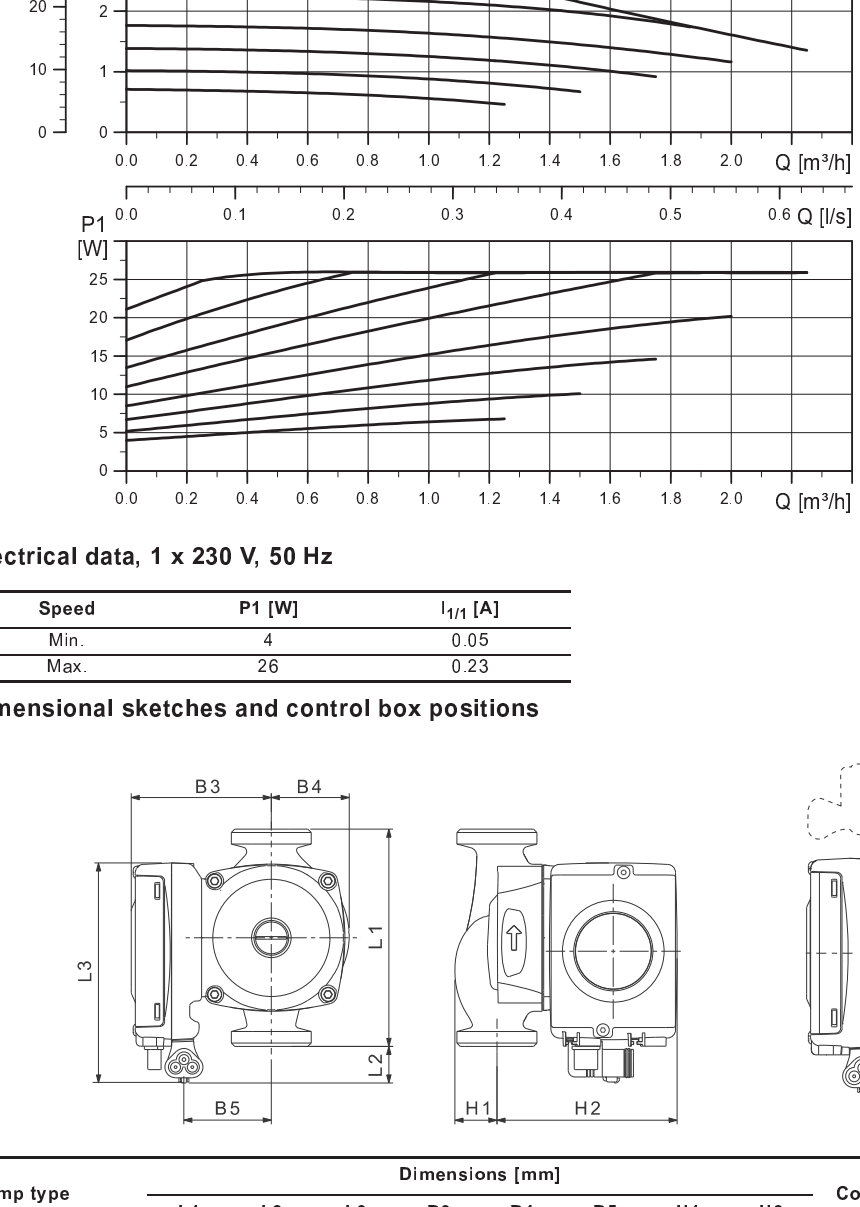

EEI ≤ 0.23

TM05 2037 4311 - TM04 9200 3710

Electrical data, 1 x 230 V, 50 Hz

Speed	P1 [W]	$I_{1/1}$ [A]
Min.	4	0.05
Max.	26	0.23

Dimensional sketches and control box positions

TM04 9212 3810 - TM04 9482 4310

Pump type	Dimensions [mm]								Connection	Net weight [kg]	Quantity per pallet
	L1	L2	L3	B3	B4	B5	H1	H2			
UPM2K 15-40	130	22	132	94	47	63	25	108	G 1	2.27	-

Technical data

System pressure:	Max. 1.0 MPa (10 bar)	Enclosure class:	IPX4D
Minimum inlet pressure:	0.05 MPa (0.5 bar) at 95 °C liquid temperature	Insulation class:	H
Liquid temperature:	-10 °C to +95 °C (TF 95)	Equipment class:	I
Motor protection:	Overload protection	Approval and marking:	VDE, CE

UPM2K 25-40 130, 1 x 230 V, 50/60 Hz

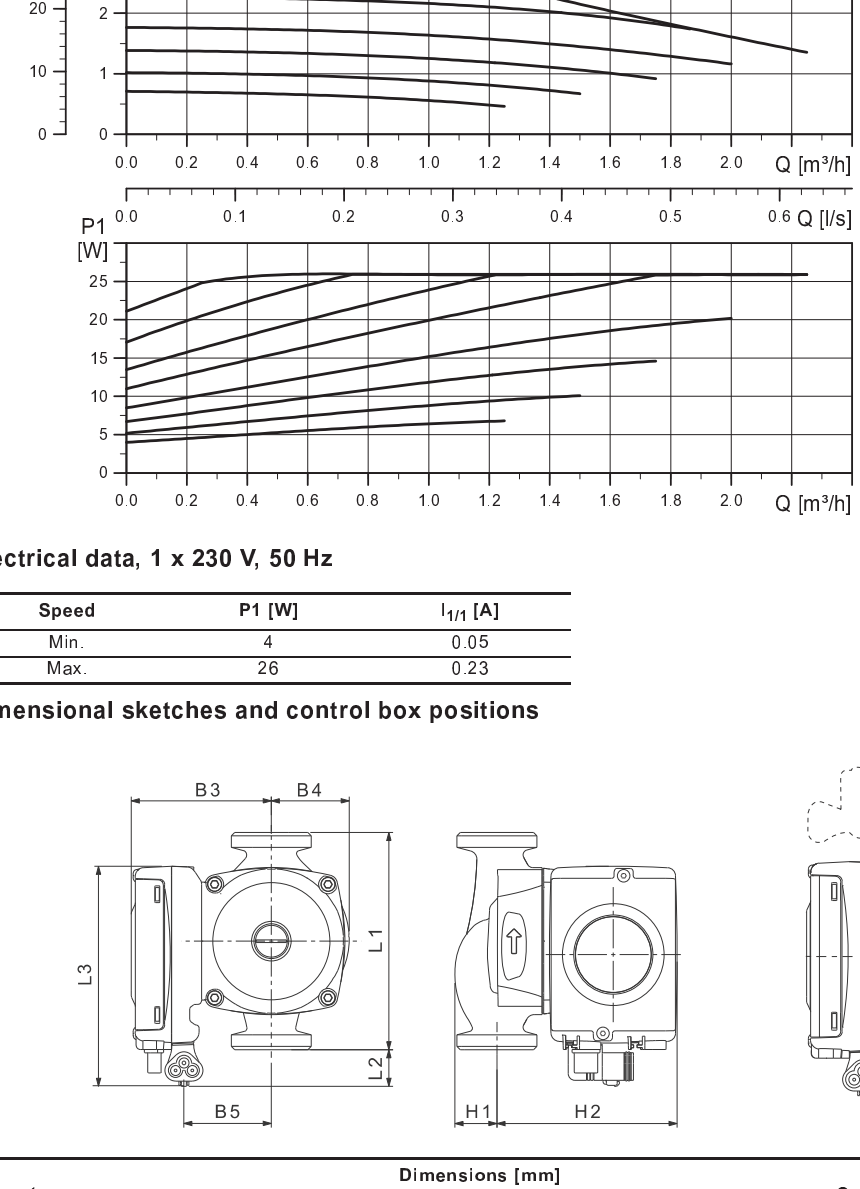

EEI ≤ 0.23

TM05 2037 4311 - TM04 9200 3710

Electrical data, 1 x 230 V, 50 Hz

Speed	P1 [W]	$I_{1/1}$ [A]
Min.	4	0.05
Max.	26	0.23

Dimensional sketches and control box positions

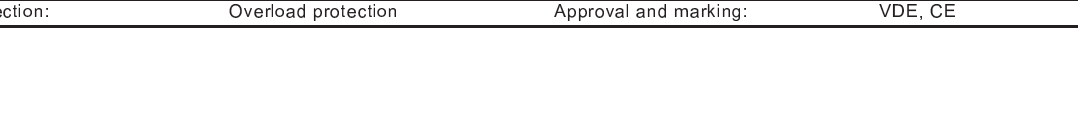

TM04 9212 3810 - TM04 9482 4310

Pump type	Dimensions [mm]								Connection	Net weight [kg]	Quantity per pallet
	L1	L2	L3	B3	B4	B5	H1	H2			
UPM2K 25-40	130	22	132	94	47	63	25	108	G 1 1/2	2.49	-

Technical data

System pressure:	Max. 1.0 MPa (10 bar)	Enclosure class:	IPX4D
Minimum inlet pressure:	0.05 MPa (0.5 bar) at 95 °C liquid temperature	Insulation class:	H
Liquid temperature:	-10 °C to +95 °C (TF 95)	Equipment class:	I
Motor protection:	Overload protection	Approval and marking:	VDE, CE

UPM2K 25-40 180, 1 x 230 V, 50/60 Hz

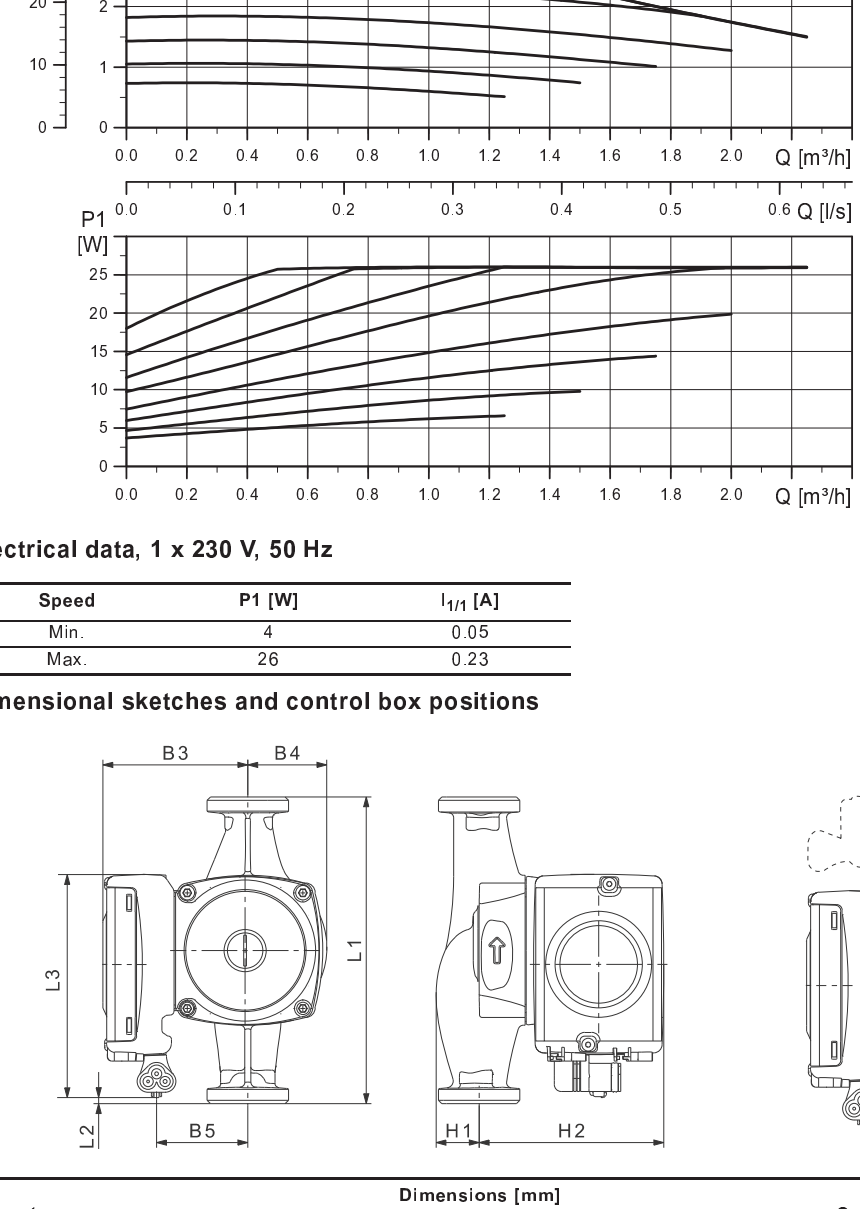

EEI ≤ 0.23

TM05 2038 4311 - TM04 9200 3710

Electrical data, 1 x 230 V, 50 Hz

Speed	P1 [W]	$I_{1/1}$ [A]
Min.	4	0.05
Max.	26	0.23

Dimensional sketches and control box positions

TM04 9212 3810 - TM04 9482 4310

Pump type	Dimensions [mm]								Connection	Net weight [kg]	Quantity per pallet
	L1	L2	L3	B3	B4	B5	H1	H2			
UPM2K 25-40	180	3	132	94	46	63	25	108	G 1 1/2	2.63	-

Technical data

System pressure:	Max. 1.0 MPa (10 bar)	Enclosure class:	IPX4D
Minimum inlet pressure:	0.05 MPa (0.5 bar) at 95 °C liquid temperature	Insulation class:	H
Liquid temperature:	-10 °C to +95 °C (TF 95)	Equipment class:	I
Motor protection:	Overload protection	Approval and marking:	VDE, CE

UPM2K 15-50 130, 1 x 230 V, 50/60 Hz

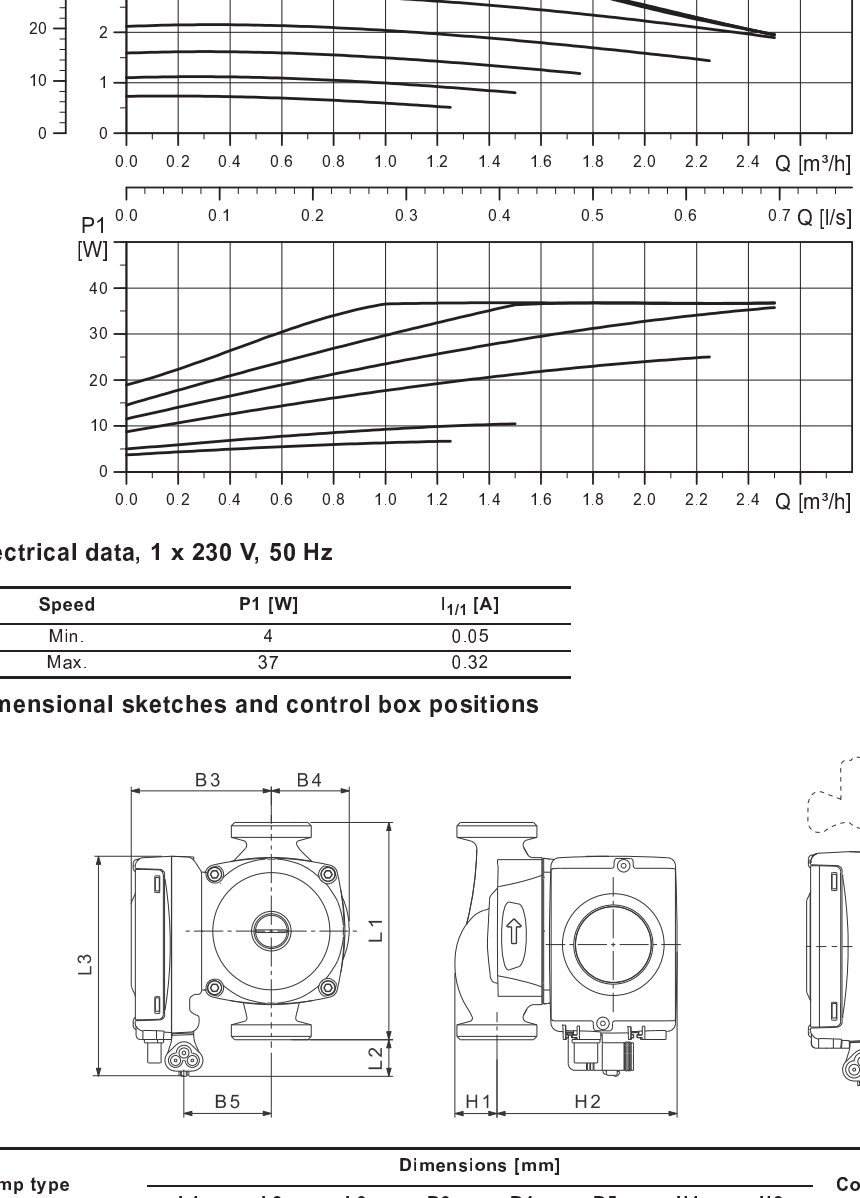

EEI ≤ 0.23

TM05 2039 4311 - TM04 9200 3710

Electrical data, 1 x 230 V, 50 Hz

Speed	P1 [W]	$I_{1/1}$ [A]
Min.	4	0.05
Max.	37	0.32

Dimensional sketches and control box positions

TM04 9212 3810 - TM04 9482 4310

Pump type	Dimensions [mm]								Connection	Net weight [kg]	Quantity per pallet
	L1	L2	L3	B3	B4	B5	H1	H2			
UPM2K 15-50	130	22	132	94	47	63	25	108	G 1	2.27	-

Technical data

System pressure:	Max. 1.0 MPa (10 bar)	Enclosure class:	IPX4D
Minimum inlet pressure:	0.05 MPa (0.5 bar) at 95 °C liquid temperature	Insulation class:	H
Liquid temperature:	-10 °C to +95 °C (TF 95)	Equipment class:	I
Motor protection:	Overload protection	Approval and marking:	VDE, CE

UPM2K 25-50 130, 1 x 230 V, 50/60 Hz

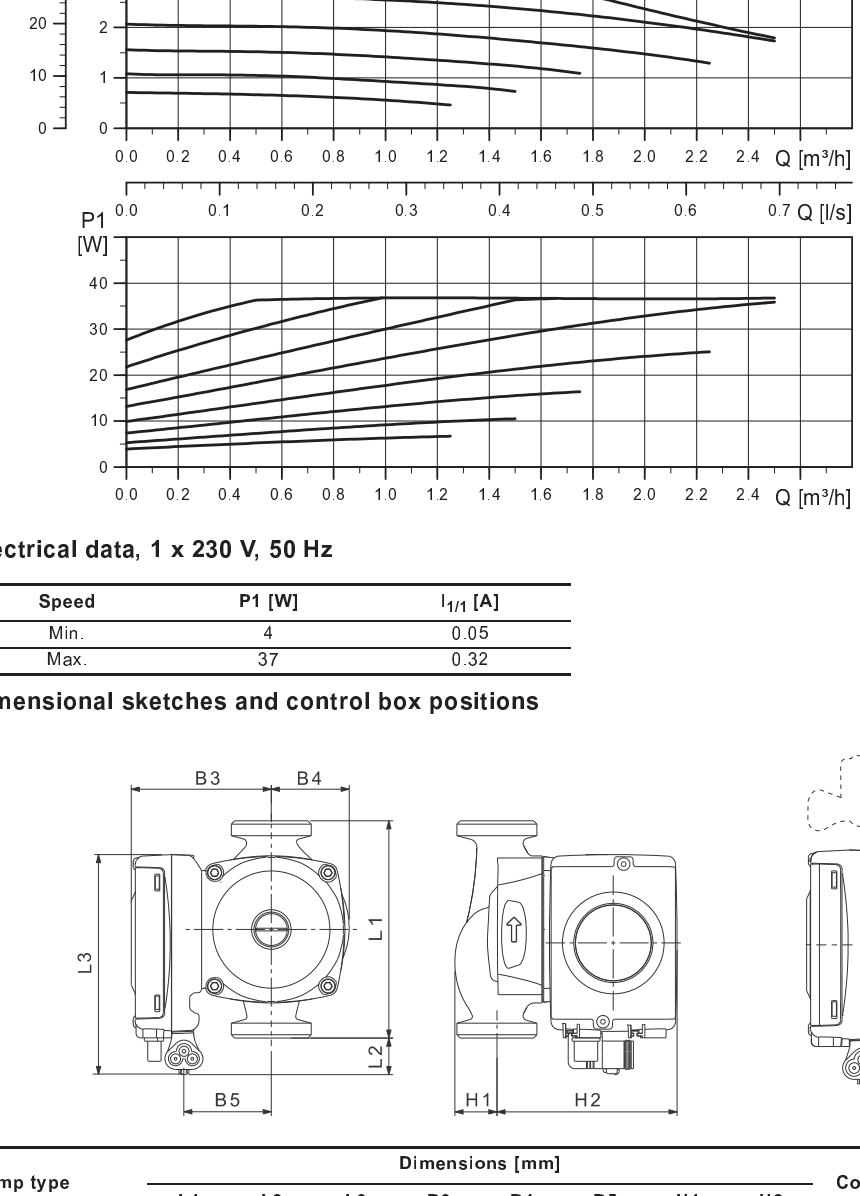

EEI ≤ 0.23

TM05 2039 4311 - TM04 9200 3710

Electrical data, 1 x 230 V, 50 Hz

Speed	P1 [W]	$I_{1/1}$ [A]
Min.	4	0.05
Max.	37	0.32

Dimensional sketches and control box positions

TM04 9212 3810 - TM04 9482 4310

Pump type	Dimensions [mm]								Connection	Net weight [kg]	Quantity per pallet
	L1	L2	L3	B3	B4	B5	H1	H2			
UPM2K 25-50	130	22	132	94	47	63	25	108	G 1 1/2	2.49	-

Technical data

System pressure:	Max. 1.0 MPa (10 bar)	Enclosure class:	IPX4D
Minimum inlet pressure:	0.05 MPa (0.5 bar) at 95 °C liquid temperature	Insulation class:	H
Liquid temperature:	-10 °C to +95 °C (TF 95)	Equipment class:	I
Motor protection:	Overload protection	Approval and marking:	VDE, CE

UPM2K 25-50 180, 1 x 230 V, 50/60 Hz

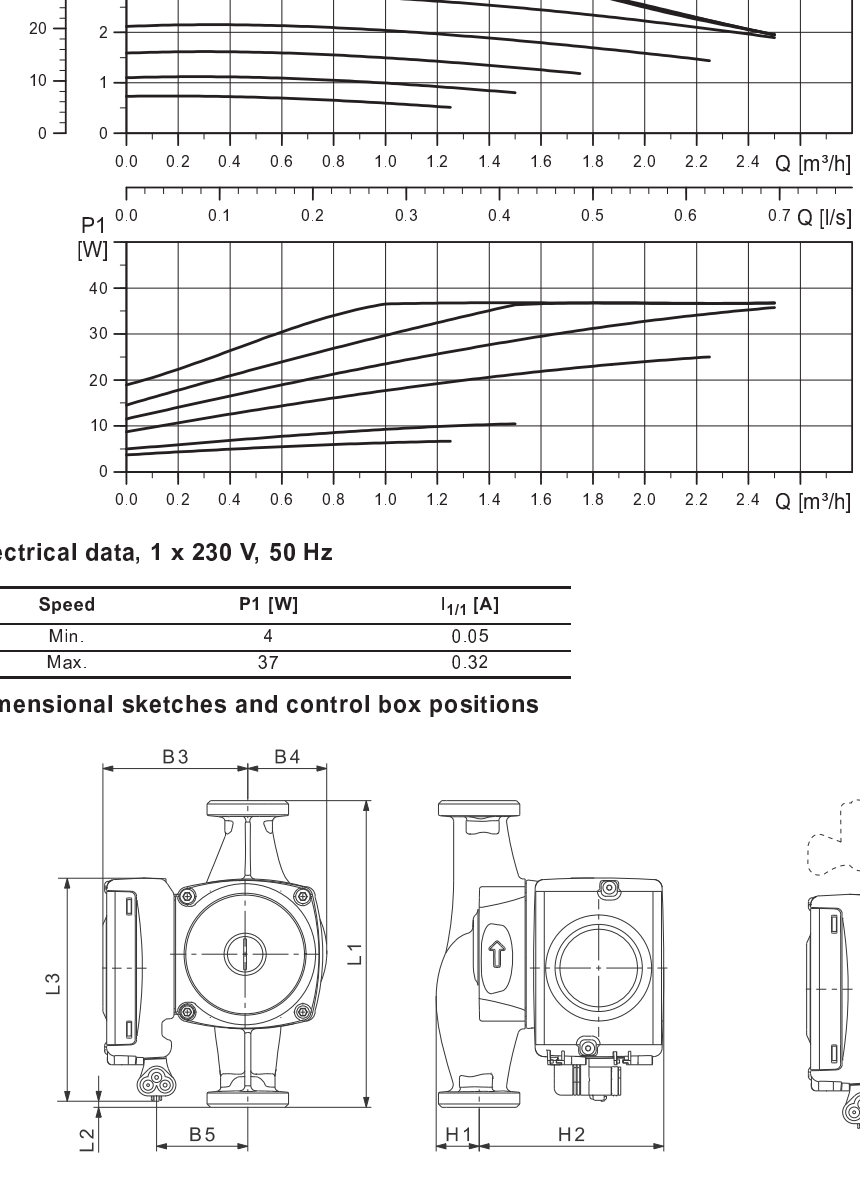

EEI ≤ 0.23

TM05 2040 4311 - TM04 9200 3710

Electrical data, 1 x 230 V, 50 Hz

Speed	P1 [W]	$I_{1/1}$ [A]
Min.	4	0.05
Max.	37	0.32

Dimensional sketches and control box positions

TM04 9212 3810 - TM04 9482 4310

Pump type	Dimensions [mm]								Connection	Net weight [kg]	Quantity per pallet
	L1	L2	L3	B3	B4	B5	H1	H2			
UPM2K 25-50	180	3	132	94	46	63	25	108	G 1 1/2	2.63	-

Technical data

System pressure:	Max. 1.0 MPa (10 bar)	Enclosure class:	IPX4D
Minimum inlet pressure:	0.05 MPa (0.5 bar) at 95 °C liquid temperature	Insulation class:	H
Liquid temperature:	-10 °C to +95 °C (TF 95)	Equipment class:	I
Motor protection:	Overload protection	Approval and marking:	VDE, CE

UPM2K 15-60 130, 1 x 230 V, 50/60 Hz

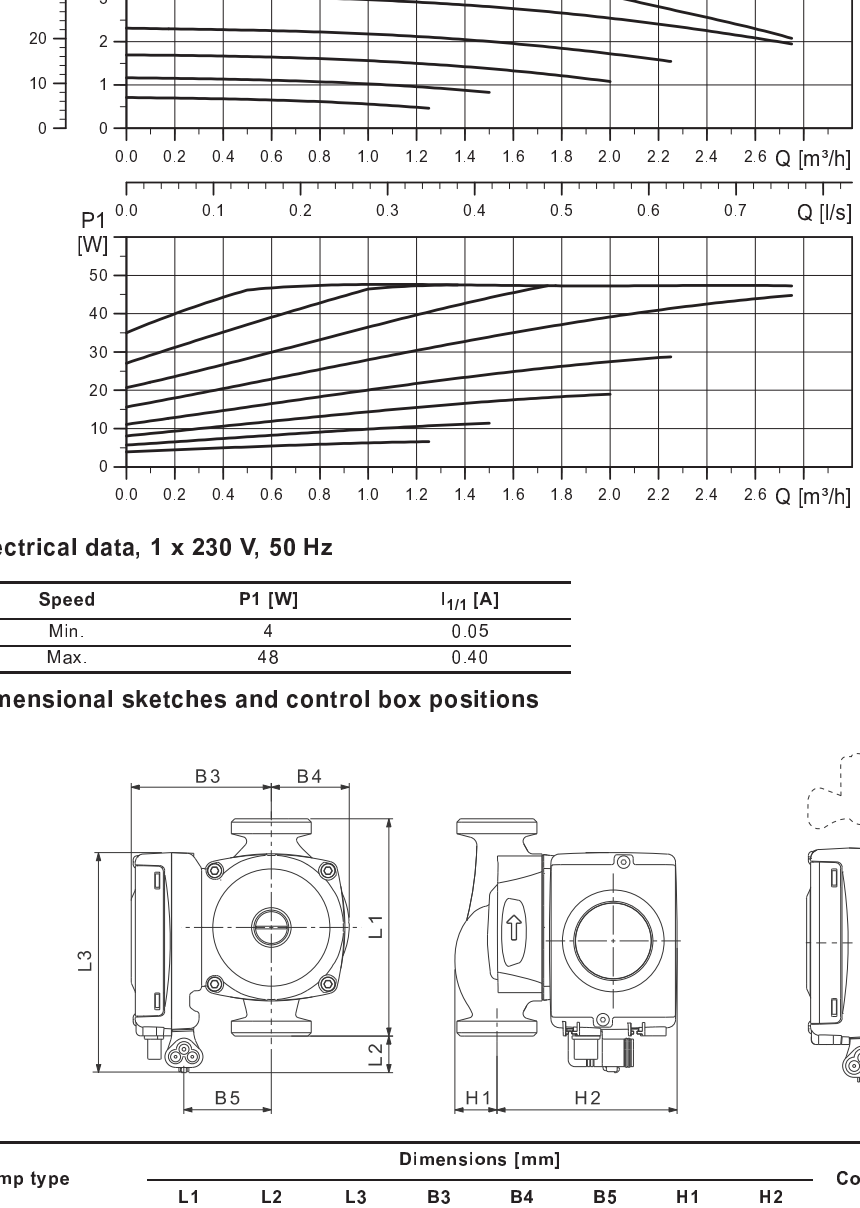

EEI ≤ 0.23

TM05 2041 4311 - TM04 9200 3710

Electrical data, 1 x 230 V, 50 Hz

Speed	P1 [W]	$I_{1/1}$ [A]
Min.	4	0.05
Max.	48	0.40

Dimensional sketches and control box positions

TM04 9212 3810 - TM04 9482 4310

Pump type	Dimensions [mm]								Connection	Net weight [kg]	Quantity per pallet
	L1	L2	L3	B3	B4	B5	H1	H2			
UPM2K 15-60	130	22	132	94	47	63	25	108	G 1	2.27	-

Technical data

System pressure:	Max. 1.0 MPa (10 bar)	Enclosure class:	IPX4D
Minimum inlet pressure:	0.05 MPa (0.5 bar) at 95 °C liquid temperature	Insulation class:	H
Liquid temperature:	-10 °C to +95 °C (TF 95)	Equipment class:	I
Motor protection:	Overload protection	Approval and marking:	VDE, CE

UPM2K 25-60 130, 1 x 230 V, 50/60 Hz

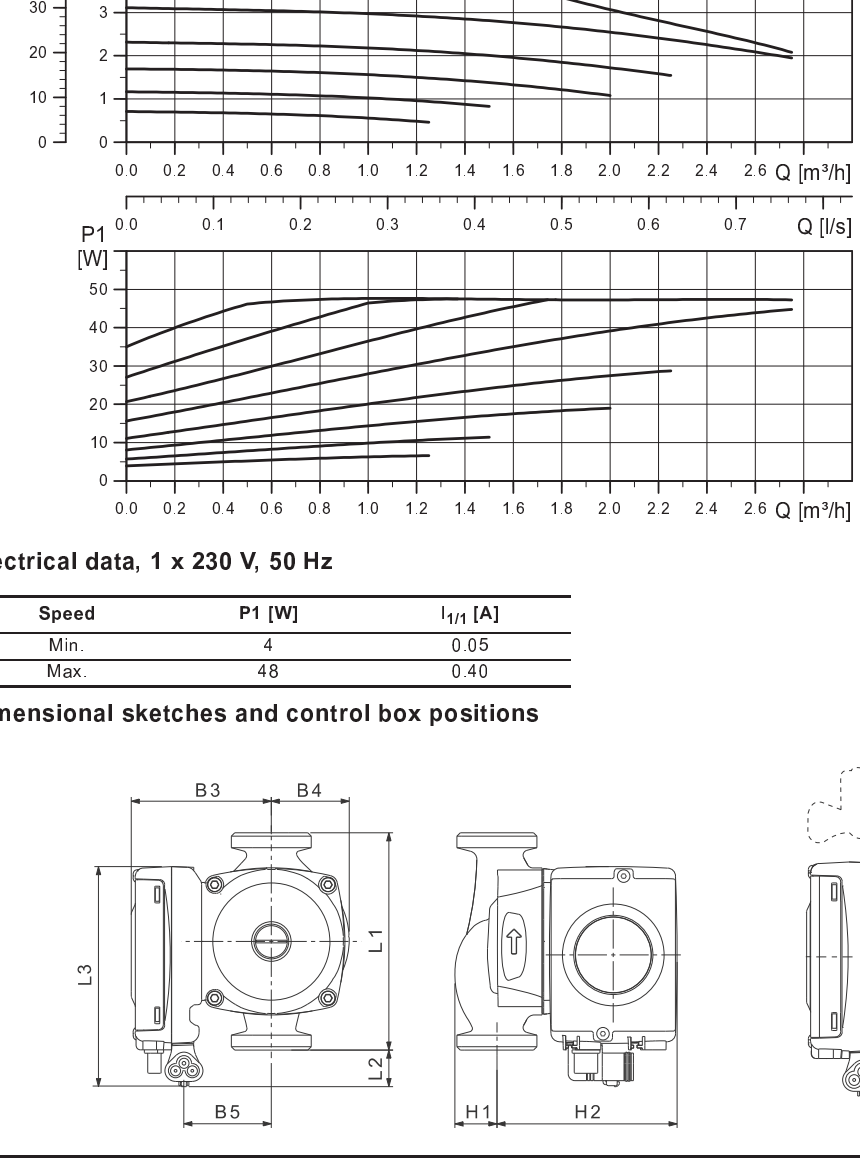

EEI ≤ 0.23

TM05 2041 4311 - TM04 9200 3710

Electrical data, 1 x 230 V, 50 Hz

Speed	P1 [W]	$I_{1/1}$ [A]
Min.	4	0.05
Max.	48	0.40

Dimensional sketches and control box positions

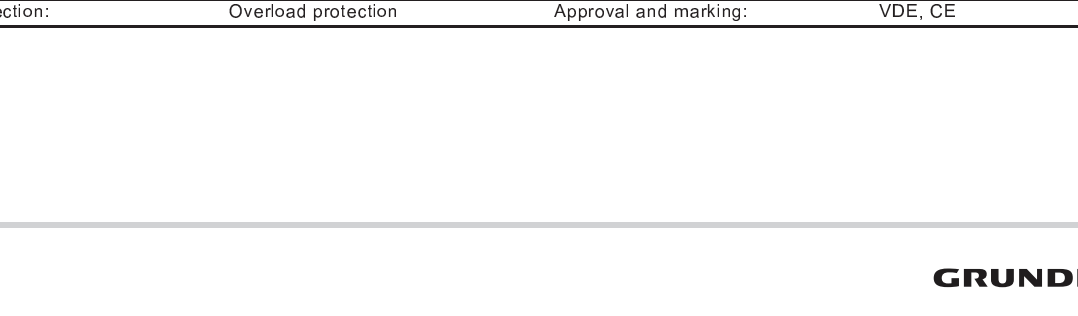

TM04 9212 3810 - TM04 9482 4310

Pump type	Dimensions [mm]								Connection	Net weight [kg]	Quantity per pallet
	L1	L2	L3	B3	B4	B5	H1	H2			
UPM2K 25-60	130	22	132	94	47	63	25	108	G 1 1/2	2.49	-

Technical data

System pressure:	Max. 1.0 MPa (10 bar)	Enclosure class:	IPX4D
Minimum inlet pressure:	0.05 MPa (0.5 bar) at 95 °C liquid temperature	Insulation class:	H
Liquid temperature:	-10 °C to +95 °C (TF 95)	Equipment class:	I
Motor protection:	Overload protection	Approval and marking:	VDE, CE

UPM2K 25-60 180, 1 x 230 V, 50/60 Hz

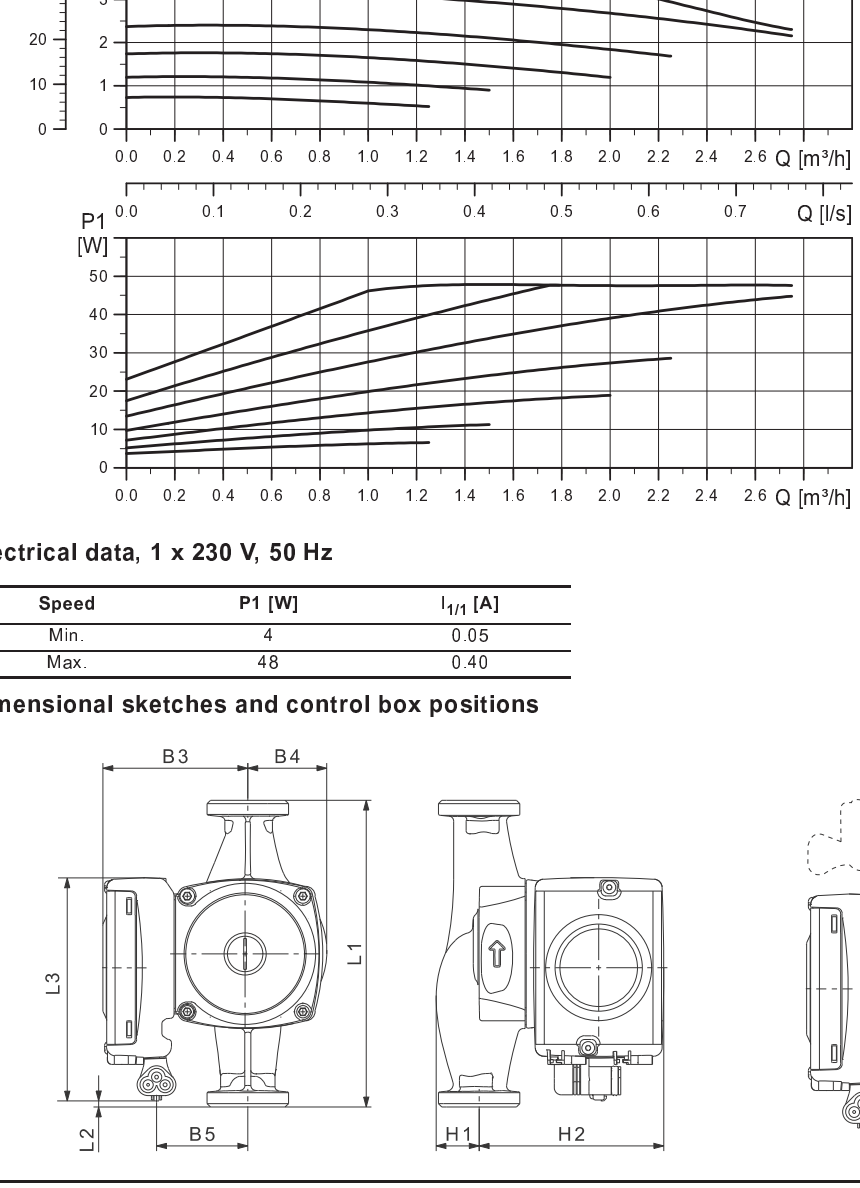

EEI ≤ 0.23

TM05 2042 4311 - TM04 9200 3710

Electrical data, 1 x 230 V, 50 Hz

Speed	P1 [W]	$I_{1/1}$ [A]
Min.	4	0.05
Max.	48	0.40

Dimensional sketches and control box positions

TM04 9212 3810 - TM04 9482 4310

Pump type	Dimensions [mm]								Connection	Net weight [kg]	Quantity per pallet
	L1	L2	L3	B3	B4	B5	H1	H2			
UPM2K 25-60	180	3	132	94	46	63	25	108	G 1 1/2	2.63	-

Technical data

System pressure:	Max. 1.0 MPa (10 bar)	Enclosure class:	IPX4D
Minimum inlet pressure:	0.05 MPa (0.5 bar) at 95 °C liquid temperature	Insulation class:	H
Liquid temperature:	-10 °C to +95 °C (TF 95)	Equipment class:	I
Motor protection:	Overload protection	Approval and marking:	VDE, CE

UPM2K 15-70 130, 1 x 230 V, 50/60 Hz

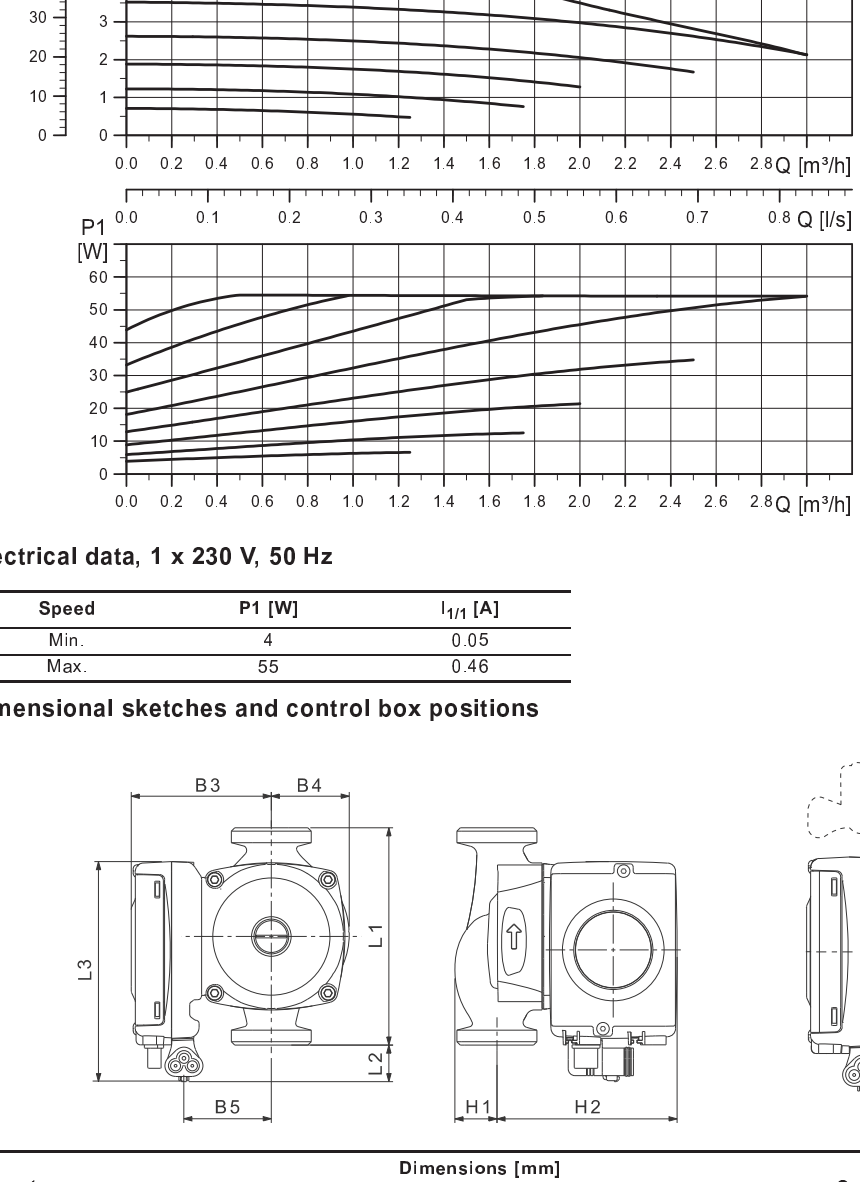

EEI ≤ 0.23

TM05 2043 4311 - TM04 9200 3710

Electrical data, 1 x 230 V, 50 Hz

Speed	P1 [W]	$I_{1/1}$ [A]
Min.	4	0.05
Max.	55	0.46

Dimensional sketches and control box positions

TM04 9212 3810 - TM04 9482 4310

Pump type	Dimensions [mm]								Connection	Net weight [kg]	Quantity per pallet
	L1	L2	L3	B3	B4	B5	H1	H2			
UPM2K 15-70	130	22	132	94	47	63	25	108	G 1	2.27	-

Technical data

System pressure:	Max. 1.0 MPa (10 bar)	Enclosure class:	IPX4D
Minimum inlet pressure:	0.05 MPa (0.5 bar) at 95 °C liquid temperature	Insulation class:	H
Liquid temperature:	-10 °C to +95 °C (TF 95)	Equipment class:	I
Motor protection:	Overload protection	Approval and marking:	VDE, CE

UPM2K 25-70 130, 1 x 230 V, 50/60 Hz

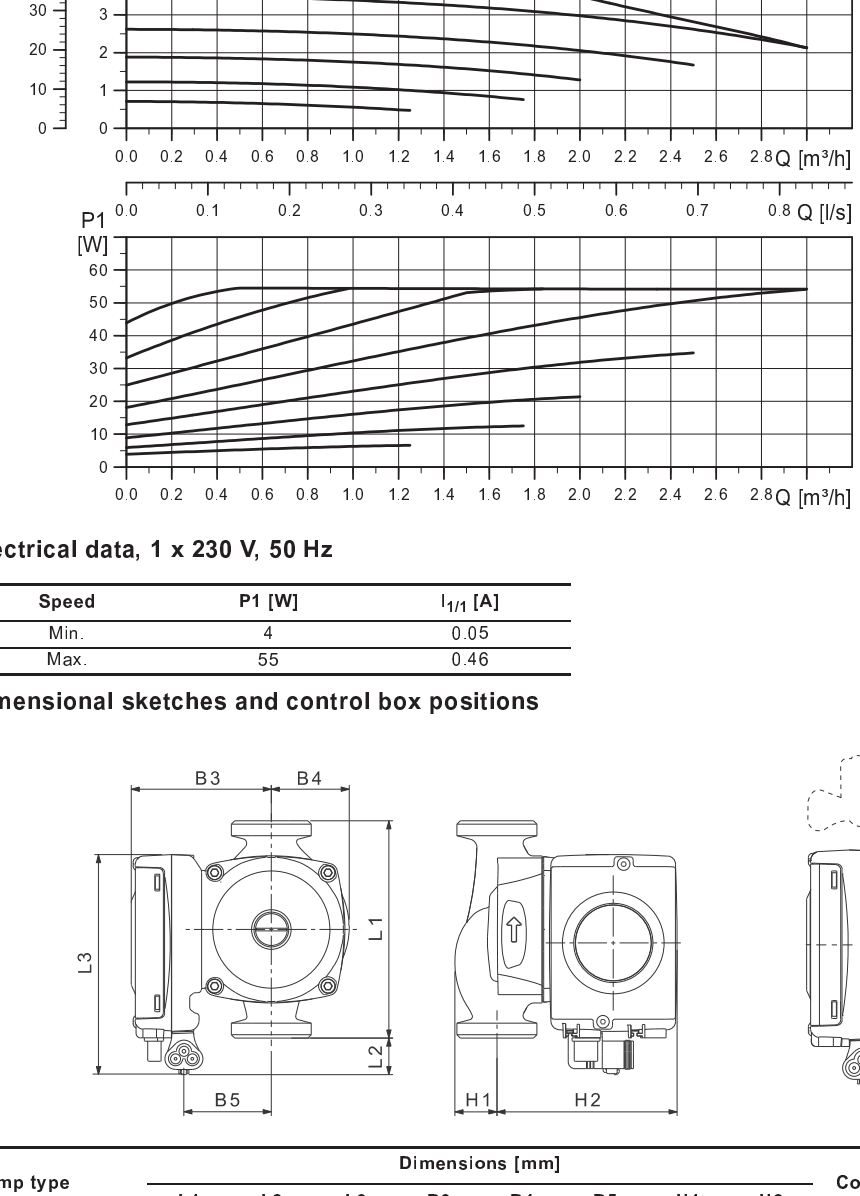

EEI ≤ 0.23

TM05 2043 4311 - TM04 9200 3710

Electrical data, 1 x 230 V, 50 Hz

Speed	P1 [W]	$I_{1/1}$ [A]
Min.	4	0.05
Max.	55	0.46

Dimensional sketches and control box positions

TM04 9212 3810 - TM04 9482 4310

Pump type	Dimensions [mm]								Connection	Net weight [kg]	Quantity per pallet
	L1	L2	L3	B3	B4	B5	H1	H2			
UPM2K 25-70	130	22	132	94	47	63	25	108	G 1 1/2	2.5	-

Technical data

System pressure:	Max. 1.0 MPa (10 bar)	Enclosure class:	IPX4D
Minimum inlet pressure:	0.05 MPa (0.5 bar) at 95 °C liquid temperature	Insulation class:	H
Liquid temperature:	-10 °C to +95 °C (TF 95)	Equipment class:	I
Motor protection:	Overload protection	Approval and marking:	VDE, CE

UPM2K 25-70 180, 1 x 230 V, 50/60 Hz

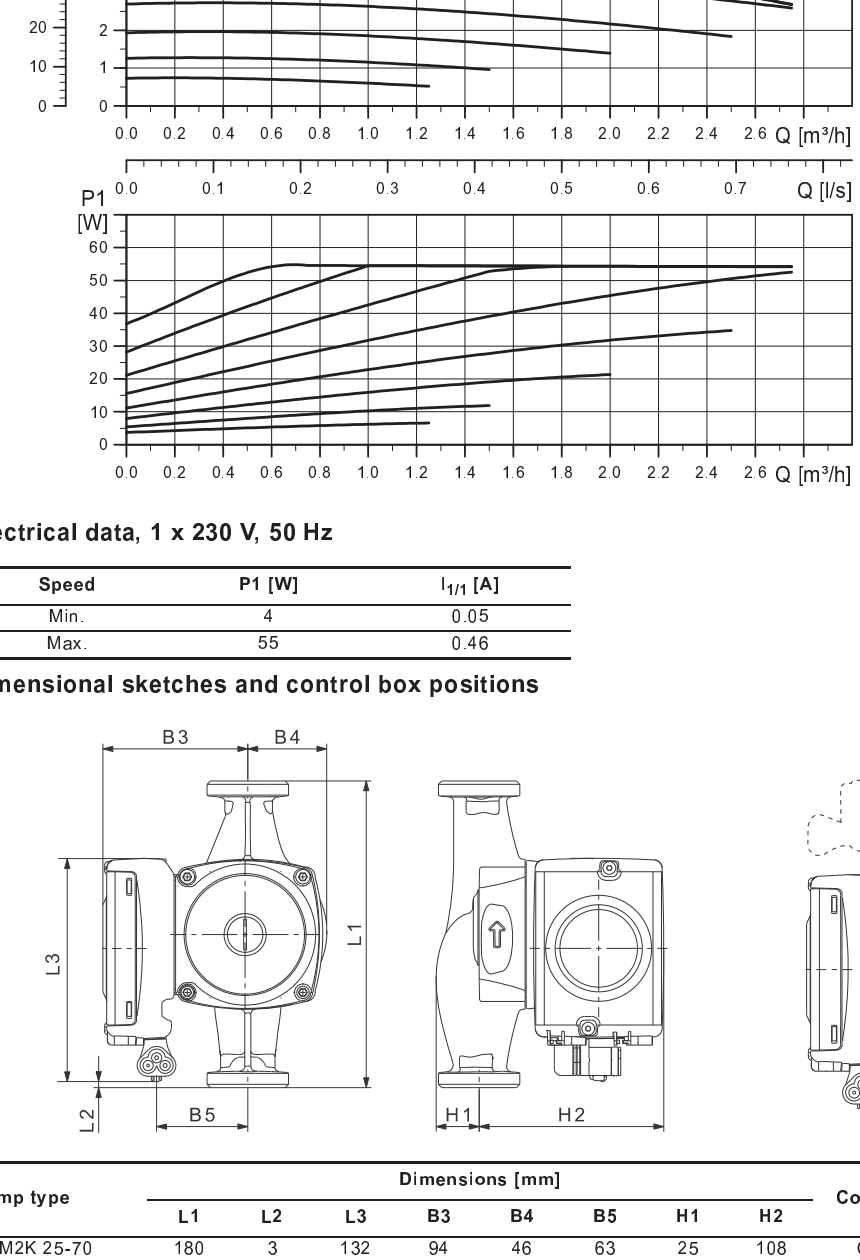

EEI ≤ 0.23

TM05 2044 4311 - TM04 9200 3710

Electrical data, 1 x 230 V, 50 Hz

Speed	P1 [W]	$I_{1/1}$ [A]
Min.	4	0.05
Max.	55	0.46

Dimensional sketches and control box positions

TM04 9212 3810 - TM04 9482 4310

Pump type	Dimensions [mm]								Connection	Net weight [kg]	Quantity per pallet
	L1	L2	L3	B3	B4	B5	H1	H2			
UPM2K 25-70	180	3	132	94	46	63	25	108	G 1 1/2	2.63	-

Technical data

System pressure:	Max. 1.0 MPa (10 bar)	Enclosure class:	IPX4D
Minimum inlet pressure:	0.05 MPa (0.5 bar) at 95 °C liquid temperature	Insulation class:	H
Liquid temperature:	-10 °C to +95 °C (TF 95)	Equipment class:	I
Motor protection:	Overload protection	Approval and marking:	VDE, CE

UPM2K 15-75 130, 1 x 230 V, 50/60 Hz

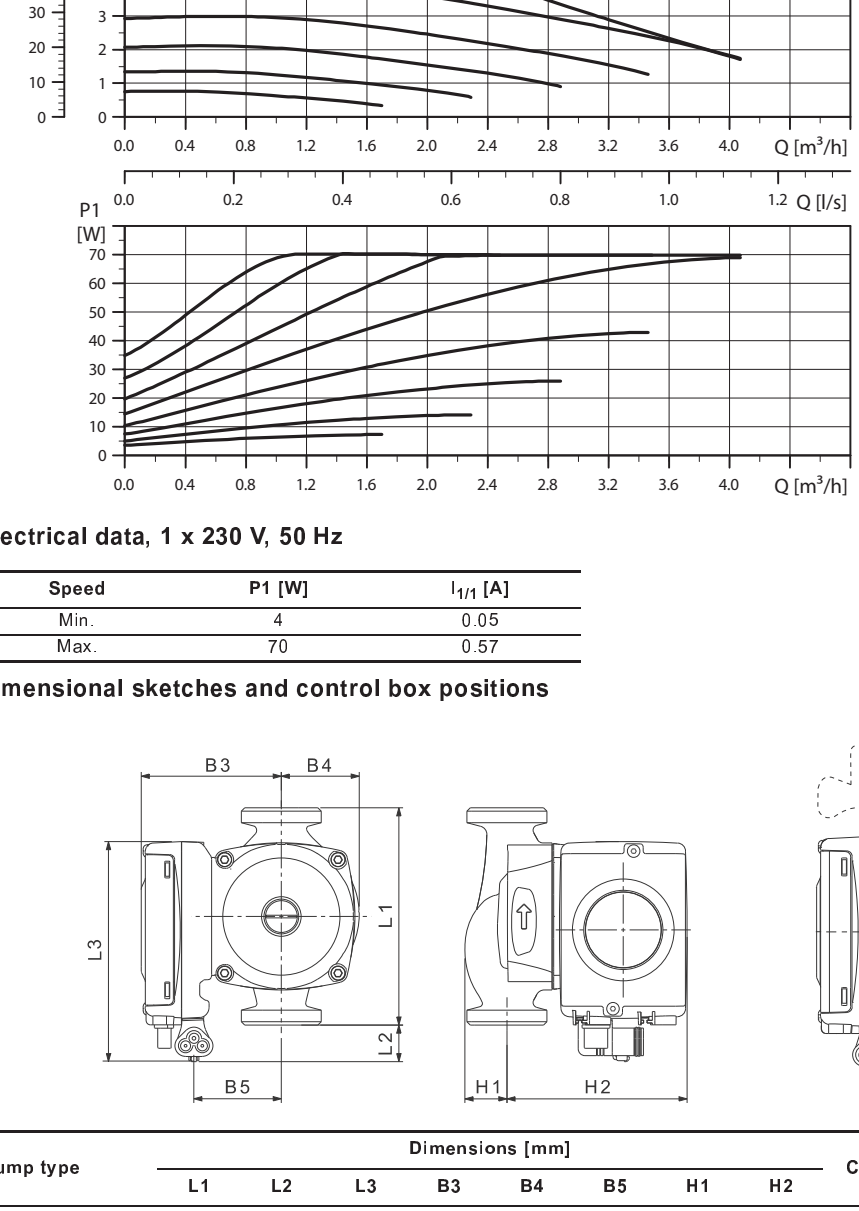

EEI ≤ 0.23

TM06 2202 3814 - TM04 9200 3710

Electrical data, 1 x 230 V, 50 Hz

Speed	P1 [W]	$I_{1/1}$ [A]
Min.	4	0.05
Max.	70	0.57

Dimensional sketches and control box positions

TM06 2202 3814 - TM04 9482 4310

Pump type	Dimensions [mm]								Connection	Net weight [kg]	Quantity per pallet
	L1	L2	L3	B3	B4	B5	H1	H2			
UPM2K 15-75	130	22	132	94	47	63	25	108	G 1	2.27	-

Technical data

System pressure:	Max. 1.0 MPa (10 bar)	Enclosure class:	IPX4D
Minimum inlet pressure:	0.05 MPa (0.5 bar) at 95 °C liquid temperature	Insulation class:	H
Liquid temperature:	-10 °C to +95 °C (TF 95)	Equipment class:	I
Motor protection:	Overload protection	Approval and marking:	VDE, CE

UPM2K 25-75 130, 1 x 230 V, 50/60 Hz

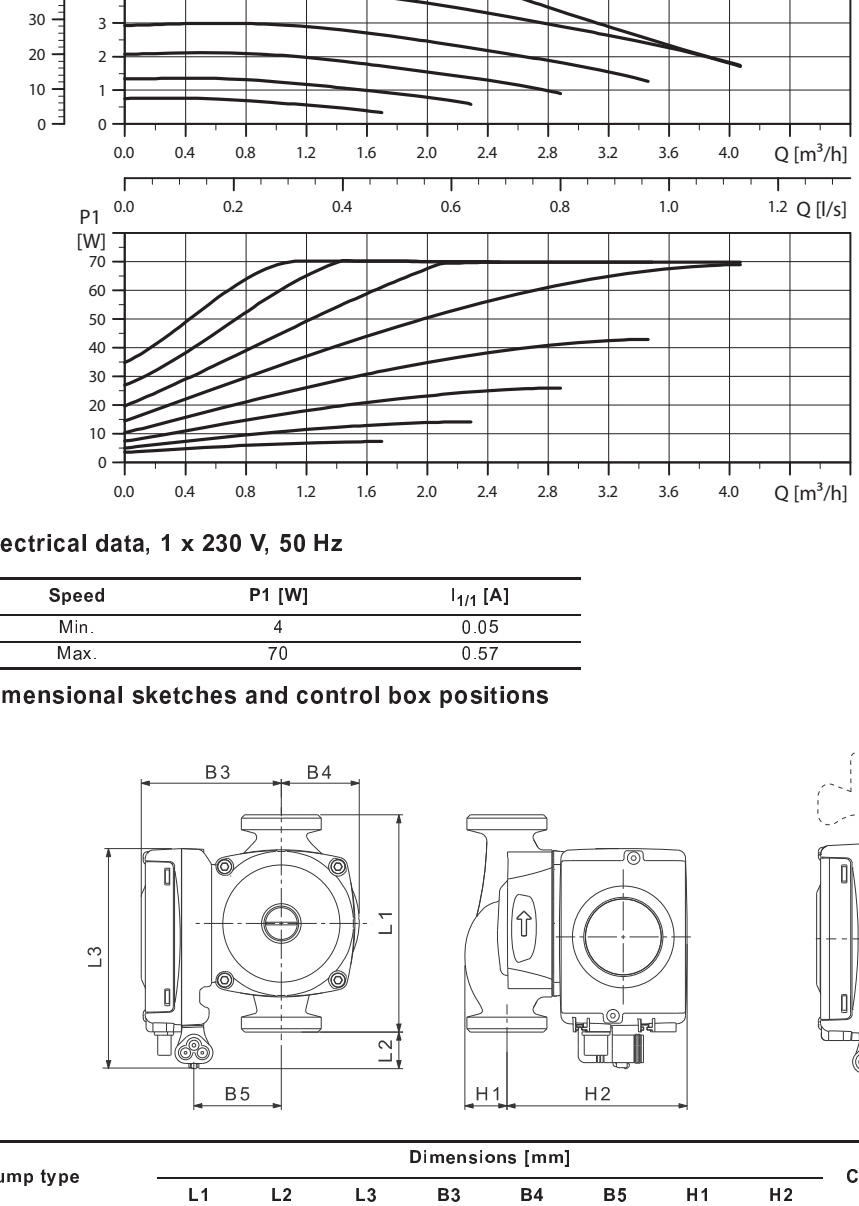

EEI ≤ 0.23

TM06 2202 3814 - TM04 9200 3710

Electrical data, 1 x 230 V, 50 Hz

Speed	P1 [W]	$I_{1/1}$ [A]
Min.	4	0.05
Max.	70	0.57

Dimensional sketches and control box positions

TM04 9212 3810 - TM04 9482 4310

Pump type	Dimensions [mm]								Connection	Net weight [kg]	Quantity per pallet
	L1	L2	L3	B3	B4	B5	H1	H2			
UPM2K 25-75	130	22	132	94	47	63	25	108	G 1 1/2	2.5	-

Technical data

System pressure:	Max. 1.0 MPa (10 bar)	Enclosure class:	IPX4D
Minimum inlet pressure:	0.05 MPa (0.5 bar) at 95 °C liquid temperature	Insulation class:	H
Liquid temperature:	-10 °C to +95 °C (TF 95)	Equipment class:	I
Motor protection:	Overload protection	Approval and marking:	VDE, CE

UPM2K 25-75 180, 1 x 230 V, 50/60 Hz

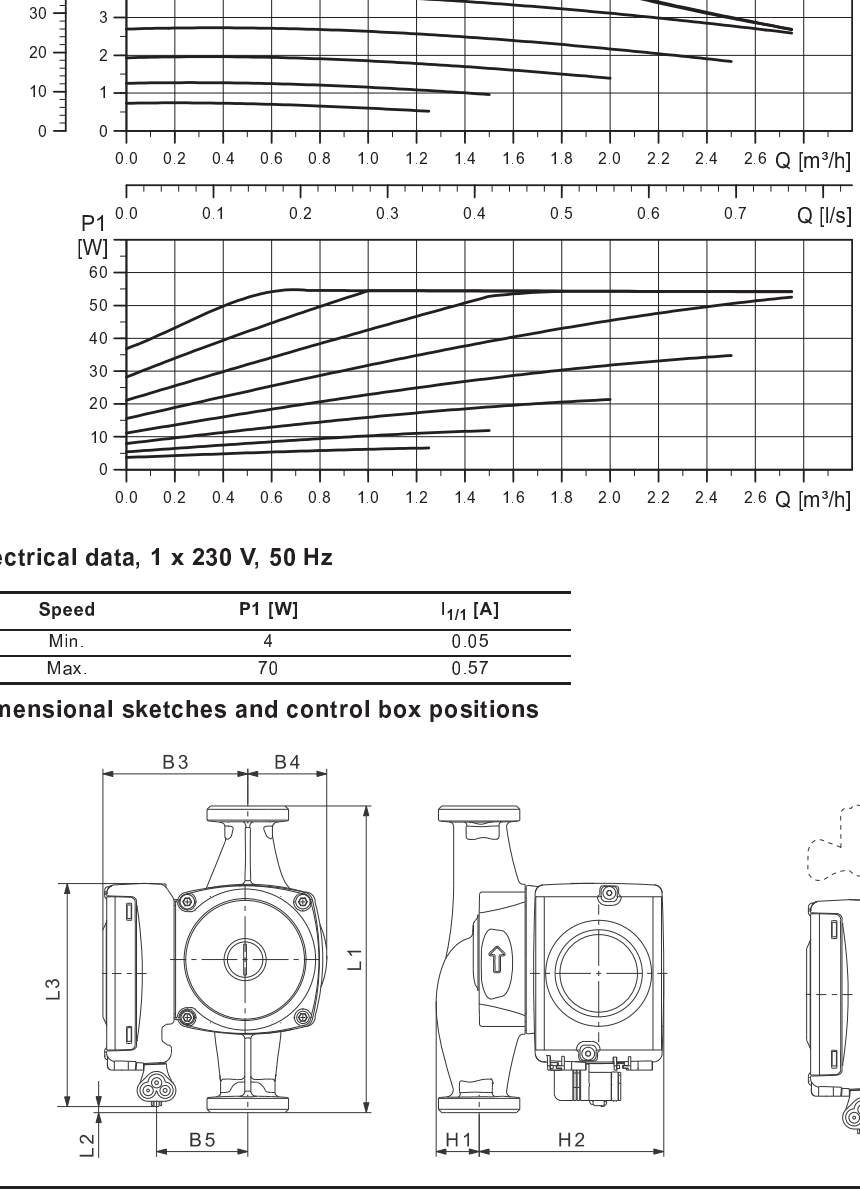

EEI ≤ 0.23

TM05 2044 4311 - TM04 9200 3710

Electrical data, 1 x 230 V, 50 Hz

Speed	P1 [W]	$I_{1/1}$ [A]
Min.	4	0.05
Max.	70	0.57

Dimensional sketches and control box positions

TM04 9212 3810 - TM04 9482 4310

Pump type	Dimensions [mm]								Connection	Net weight [kg]	Quantity per pallet
	L1	L2	L3	B3	B4	B5	H1	H2			
UPM2K 25-75	180	3	132	94	46	63	25	108	G 1 1/2	2.63	-

Technical data

System pressure:	Max. 1.0 MPa (10 bar)	Enclosure class:	IPX4D
Minimum inlet pressure:	0.05 MPa (0.5 bar) at 95 °C liquid temperature	Insulation class:	H
Liquid temperature:	-10 °C to +95 °C (TF 95)	Equipment class:	I
Motor protection:	Overload protection	Approval and marking:	VDE, CE

8. Data sheets, special housings

UPM2 15-40 GGMBP, 1 x 230 V, 50/60 Hz

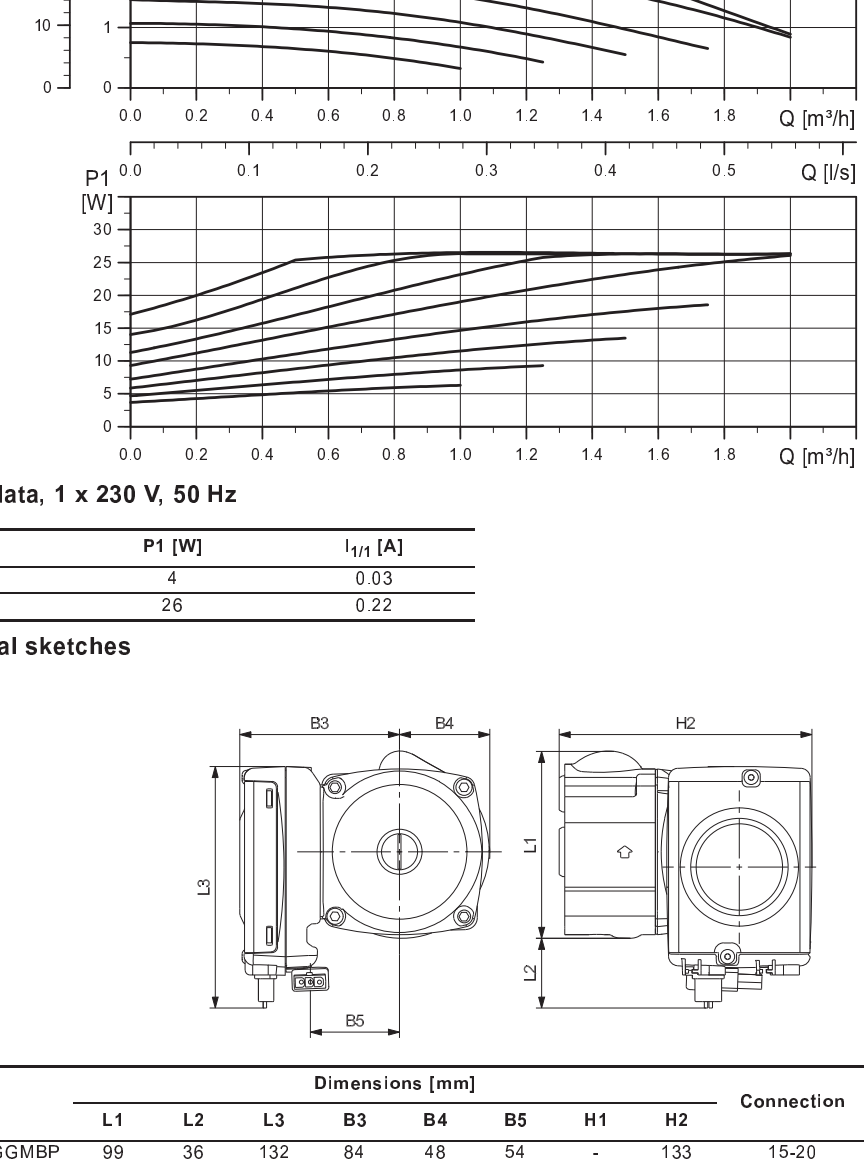

EEI ≤ 0.23

TM05 5334 3612

Electrical data, 1 x 230 V, 50 Hz

Speed	P1 [W]	$I_{1/1}$ [A]
Min.	4	0.03
Max.	26	0.22

Dimensional sketches

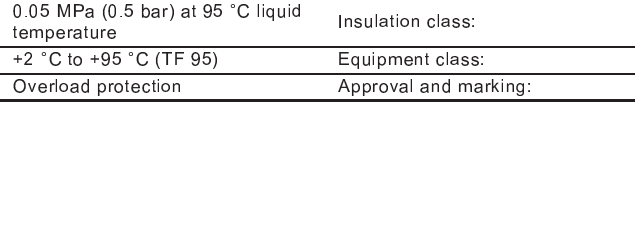

TM05 4930 2812

Pump type	Dimensions [mm]								Connection	Net weight [kg]	Quantity per pallet
	L1	L2	L3	B3	B4	B5	H1	H2			
UPM2 15-40 GGMBP	99	36	132	84	48	54	-	133	15-20	1.8	-

Technical data

System pressure:	Max. 1.0 MPa (10 bar)	Enclosure class:	IP44
Minimum inlet pressure:	0.05 MPa (0.5 bar) at 95 °C liquid temperature	Insulation class:	H
Liquid temperature:	+2 °C to +95 °C (TF 95)	Equipment class:	I
Motor protection:	Overload protection	Approval and marking:	VDE, CE

UPM2 15-50 GGMBP, 1 x 230 V, 50/60 Hz

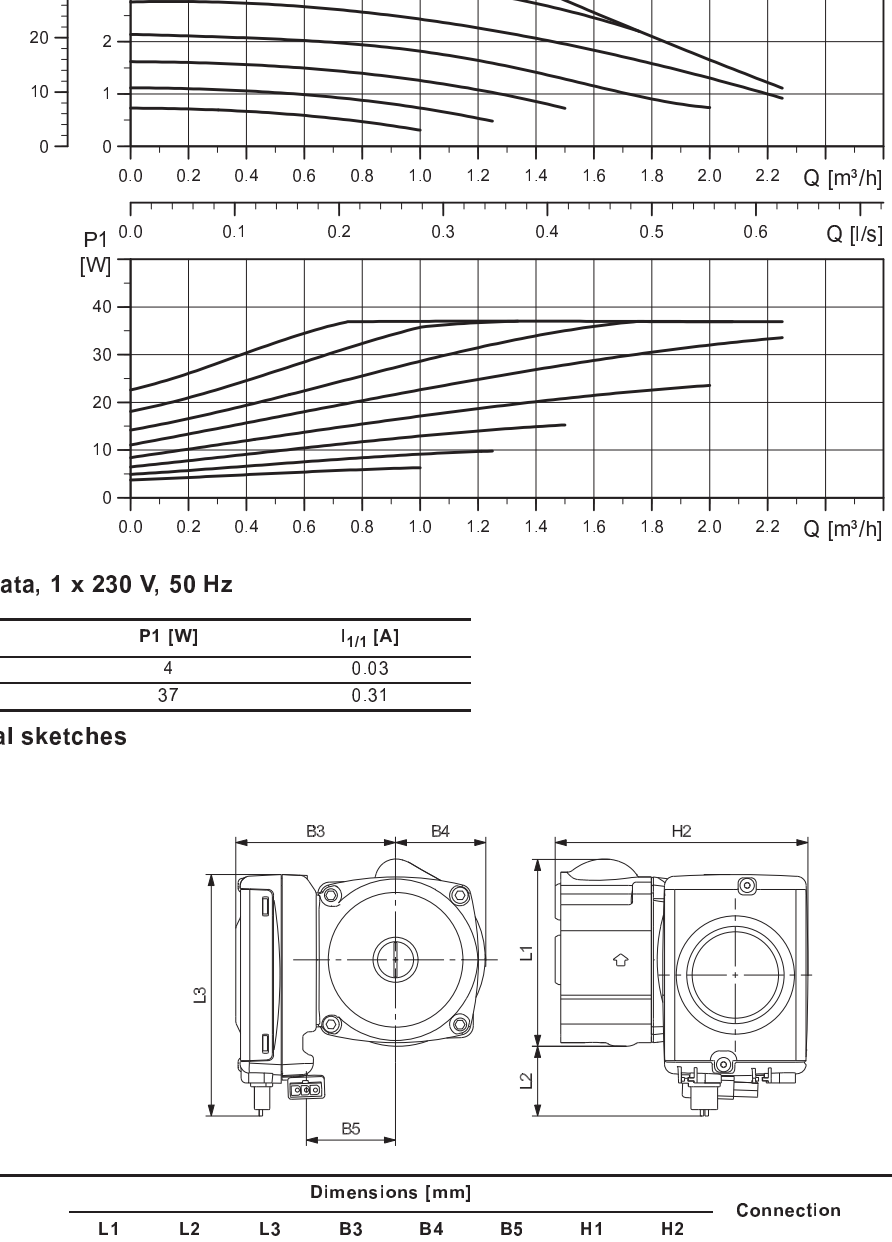

EEI ≤ 0.23

TM05 5333 3612

Electrical data, 1 x 230 V, 50 Hz

Speed	P1 [W]	$I_{1/1}$ [A]
Min.	4	0.03
Max.	37	0.31

Dimensional sketches

TM05 4930 2812

Pump type	Dimensions [mm]								Connection	Net weight [kg]	Quantity per pallet
	L1	L2	L3	B3	B4	B5	H1	H2			
UPM2 15-50 GGMBP	99	36	132	84	48	54	-	133	15-20	1.8	-

Technical data

System pressure:	Max. 1.0 MPa (10 bar)	Enclosure class:	IP44
Minimum inlet pressure:	0.05 MPa (0.5 bar) at 95 °C liquid temperature	Insulation class:	H
Liquid temperature:	+2 °C to +95 °C (TF 95)	Equipment class:	I
Motor protection:	Overload protection	Approval and marking:	VDE, CE

UPM2 15-60 GGMBP, 1 x 230 V, 50/60 Hz

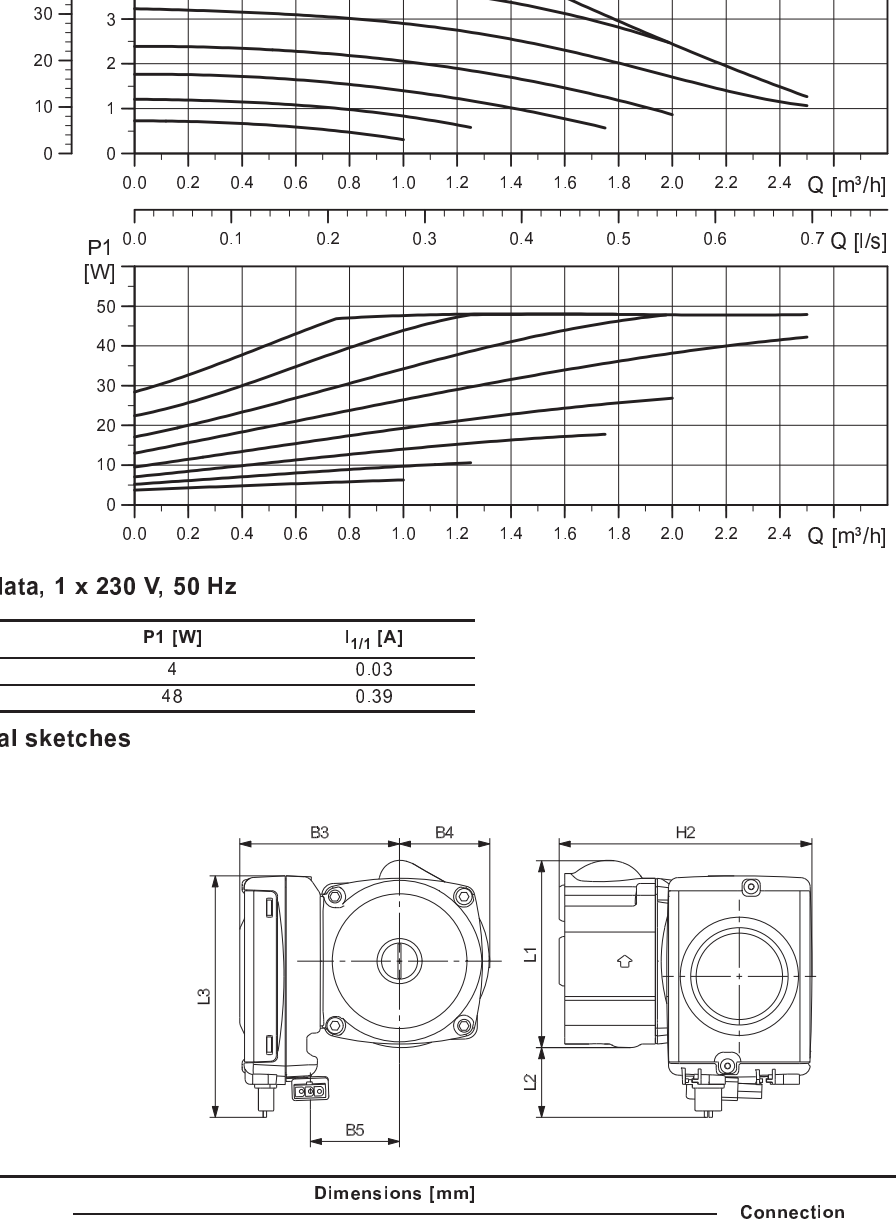

EEI ≤ 0.23

TM05 5332 3612

Electrical data, 1 x 230 V, 50 Hz

Speed	P1 [W]	$I_{1/1}$ [A]
Min.	4	0.03
Max.	48	0.39

Dimensional sketches

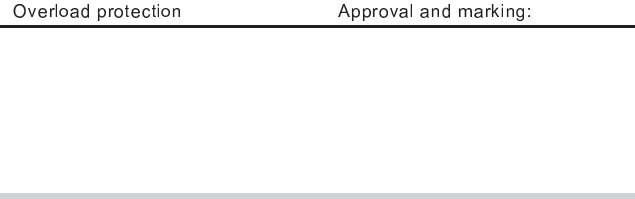

TM05 4930 2812

Pump type	Dimensions [mm]								Connection	Net weight [kg]	Quantity per pallet
	L1	L2	L3	B3	B4	B5	H1	H2			
UPM2 15-60 GGMBP	99	36	132	84	48	54	-	133	15-20	1.8	-

Technical data

System pressure:	Max. 1.0 MPa (10 bar)	Enclosure class:	IP44
Minimum inlet pressure:	0.05 MPa (0.5 bar) at 95 °C liquid temperature	Insulation class:	H
Liquid temperature:	+2 °C to +95 °C (TF 95)	Equipment class:	I
Motor protection:	Overload protection	Approval and marking:	VDE, CE

UPM2 15-70 GGMBP, 1 x 230 V, 50/60 Hz

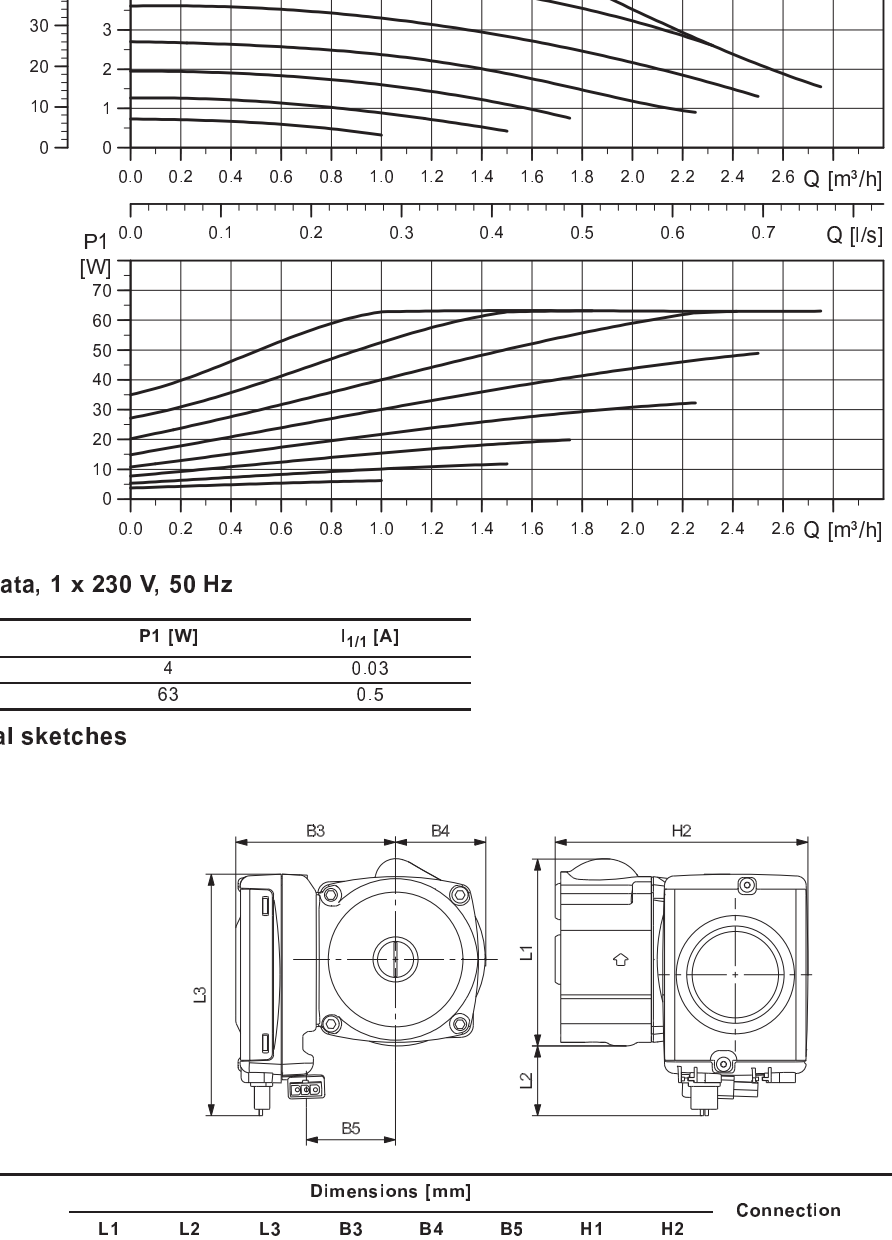

EEI ≤ 0.23

TM05 5331 3612

Electrical data, 1 x 230 V, 50 Hz

Speed	P1 [W]	$I_{1/1}$ [A]
Min.	4	0.03
Max.	63	0.5

Dimensional sketches

TM05 4930 2812

Pump type	Dimensions [mm]								Connection	Net weight [kg]	Quantity per pallet
	L1	L2	L3	B3	B4	B5	H1	H2			
UPM2 15-70 GGMBP	99	36	132	84	48	54	-	133	15-20	1.8	-

Technical data

System pressure:	Max. 1.0 MPa (10 bar)	Enclosure class:	IP44
Minimum inlet pressure:	0.05 MPa(0.5 bar) at 95 °C liquid temperature	Insulation class:	H
Liquid temperature:	+2 °C to +95 °C (TF 95)	Equipment class:	I
Motor protection:	Overload protection	Approval and marking:	VDE, CE

UPM2 15-40 ES, 1 x 230 V, 50/60 Hz

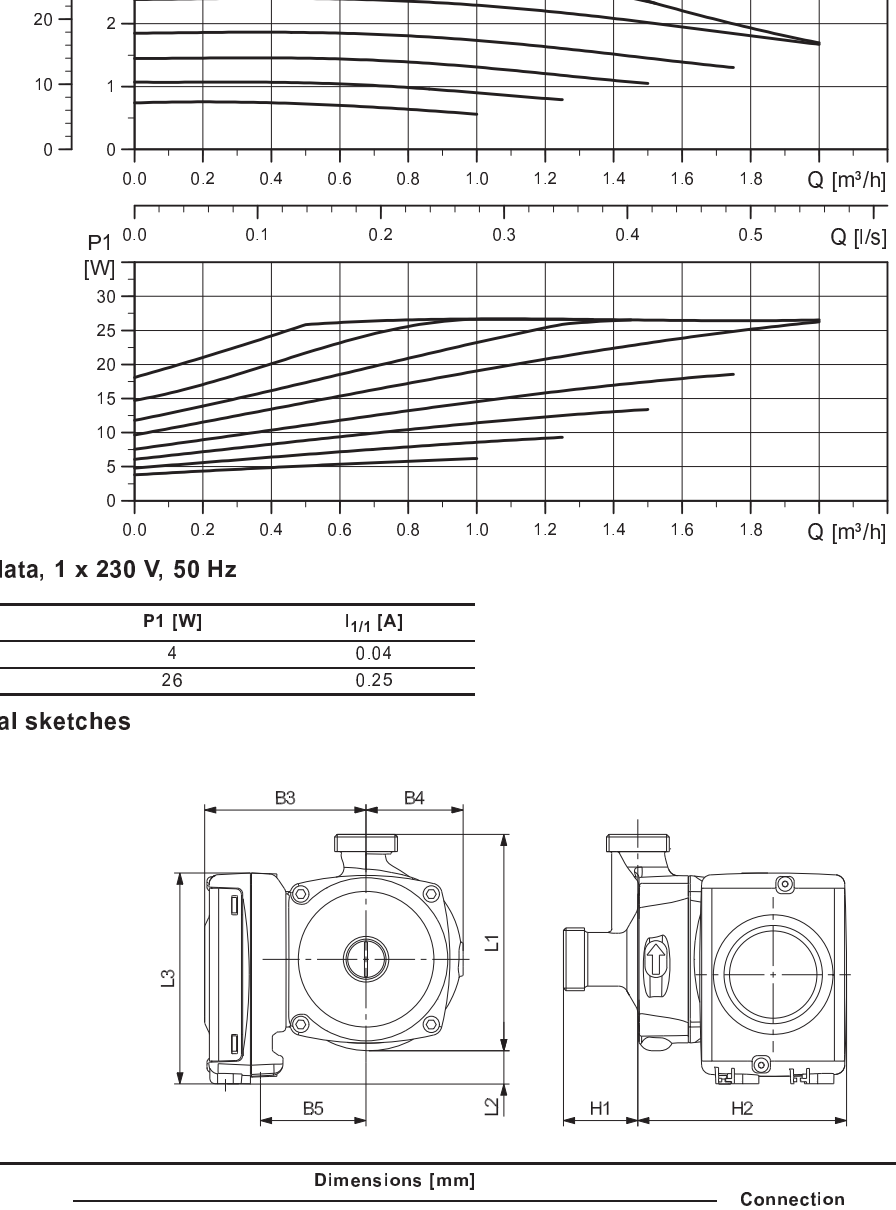

EEI ≤ 0.23

TM05 5330 3612

Electrical data, 1 x 230 V, 50 Hz

Speed	P1 [W]	$I_{1/1}$ [A]
Min.	4	0.04
Max.	26	0.25

Dimensional sketches

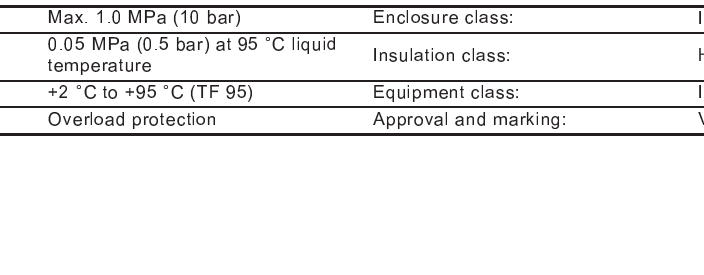

TM05 4931 2812

Pump type	Dimensions [mm]								Connection	Net weight [kg]	Quantity per pallet
	L1	L2	L3	B3	B4	B5	H1	H2			
UPM2 15-40 ES	113	17	132	84	51	54	39	109	G 1	2.1	-

Technical data

System pressure:	Max. 1.0 MPa (10 bar)	Enclosure class:	IP44
Minimum inlet pressure:	0.05 MPa (0.5 bar) at 95 °C liquid temperature	Insulation class:	H
Liquid temperature:	+2 °C to +95 °C (TF 95)	Equipment class:	I
Motor protection:	Overload protection	Approval and marking:	VDE, CE

UPM2 15-50 ES, 1 x 230 V, 50/60 Hz

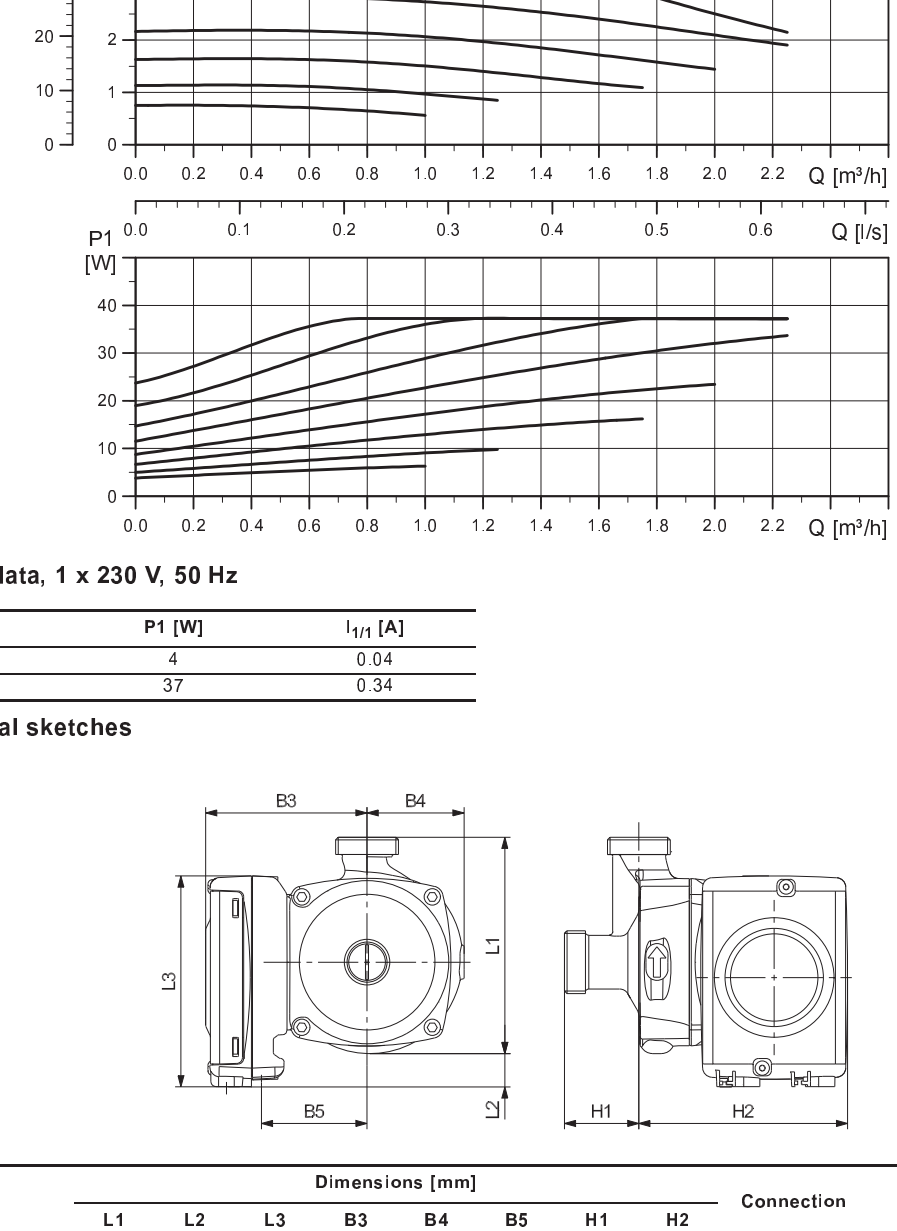

EEI ≤ 0.23

TM05 5329 3612

Electrical data, 1 x 230 V, 50 Hz

Speed	P1 [W]	$I_{1/1}$ [A]
Min.	4	0.04
Max.	37	0.34

Dimensional sketches

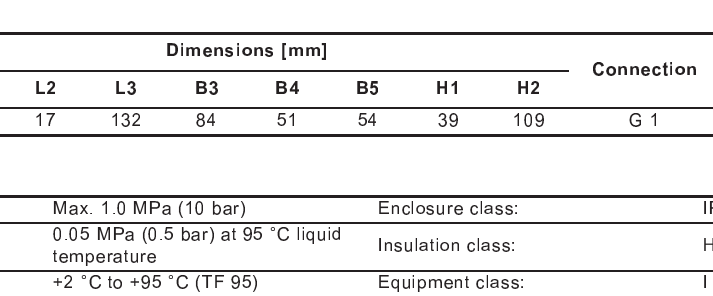

TM05 4931 2812

Pump type	Dimensions [mm]								Connection	Net weight [kg]	Quantity per pallet
	L1	L2	L3	B3	B4	B5	H1	H2			
UPM2 15-50 ES	113	17	132	84	51	54	39	109	G 1	2.1	-

Technical data

System pressure:	Max. 1.0 MPa (10 bar)	Enclosure class:	IP44
Minimum inlet pressure:	0.05 MPa (0.5 bar) at 95 °C liquid temperature	Insulation class:	H
Liquid temperature:	+2 °C to +95 °C (TF 95)	Equipment class:	I
Motor protection:	Overload protection	Approval and marking:	VDE, CE

UPM2 15-60 ES, 1 x 230 V, 50/60 Hz

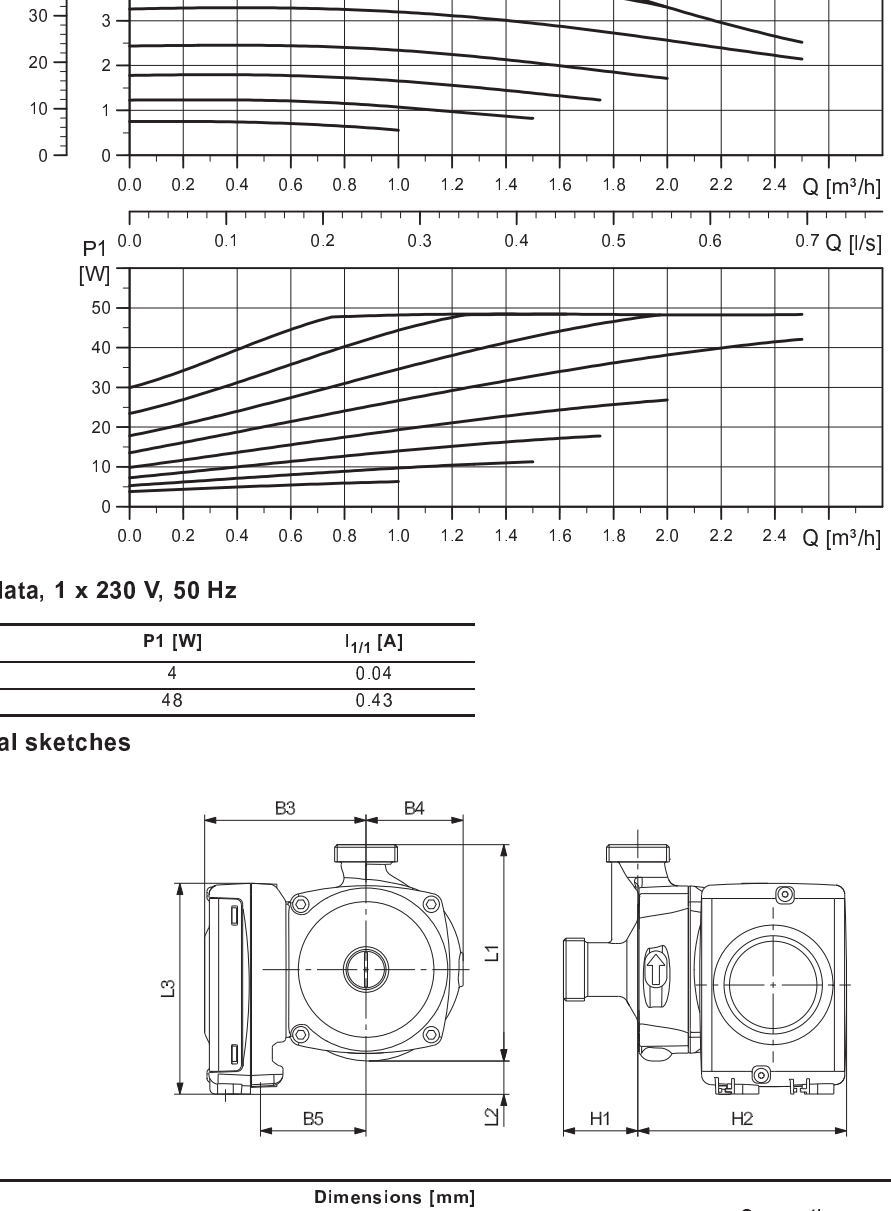

EEI ≤ 0.23

TM05 5328 3612

Electrical data, 1 x 230 V, 50 Hz

Speed	P1 [W]	$I_{1/1}$ [A]
Min.	4	0.04
Max.	48	0.43

Dimensional sketches

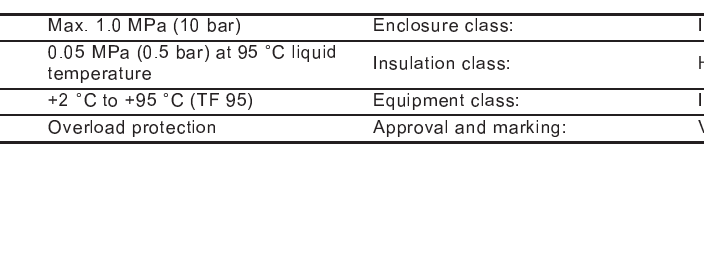

TM05 4931 2812

Pump type	Dimensions [mm]								Connection	Net weight [kg]	Quantity per pallet
	L1	L2	L3	B3	B4	B5	H1	H2			
UPM2 15-60 ES	113	17	132	84	51	54	39	109	G 1	2.1	-

Technical data

System pressure:	Max. 1.0 MPa (10 bar)	Enclosure class:	IP44
Minimum inlet pressure:	0.05 MPa (0.5 bar) at 95 °C liquid temperature	Insulation class:	H
Liquid temperature:	+2 °C to +95 °C (TF 95)	Equipment class:	I
Motor protection:	Overload protection	Approval and marking:	VDE, CE

UPM2 15-70 ES, 1 x 230 V, 50/60 Hz

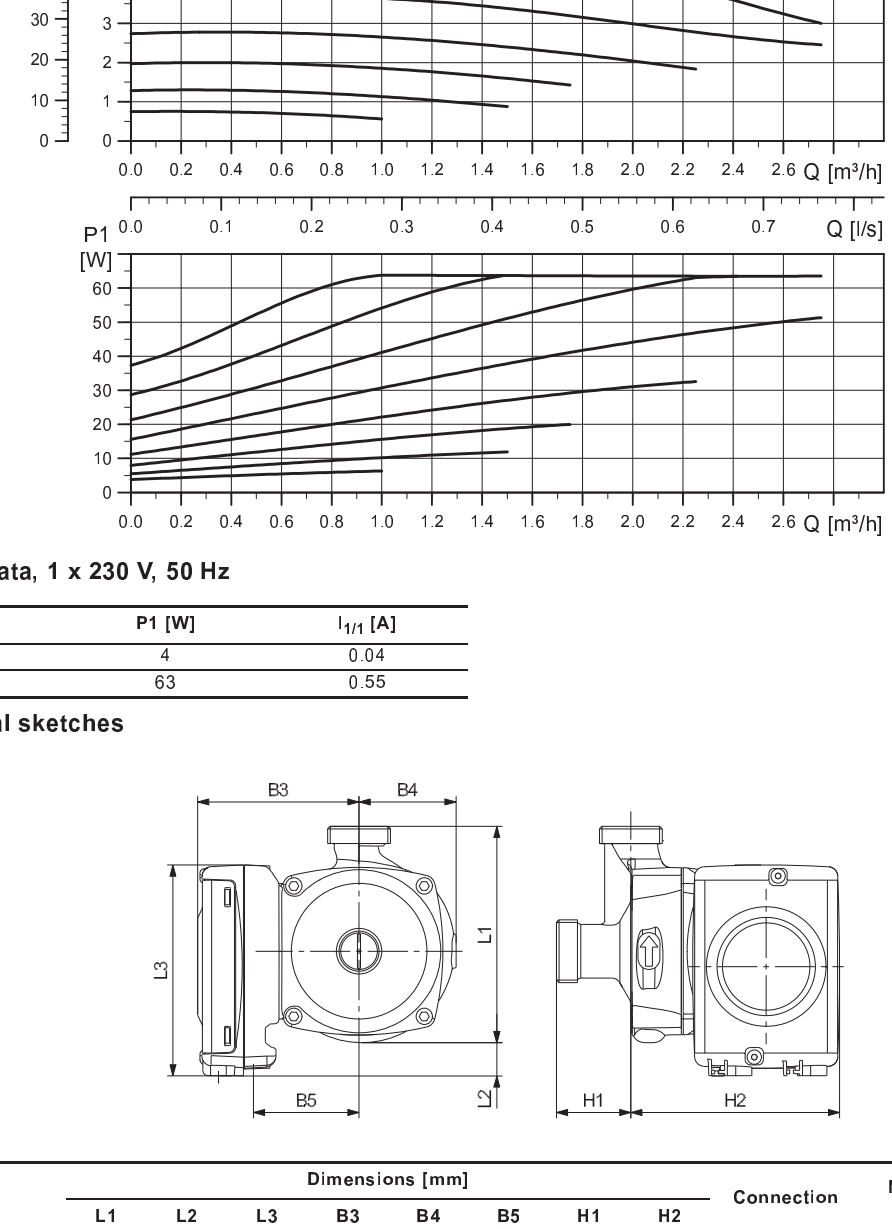

EEI ≤ 0.23

TM05 5338 3612

Electrical data, 1 x 230 V, 50 Hz

Speed	P1 [W]	$I_{1/1}$ [A]
Min.	4	0.04
Max.	63	0.55

Dimensional sketches

TM05 4931 2812

Pump type	Dimensions [mm]								Connection	Net weight [kg]	Quantity per pallet
	L1	L2	L3	B3	B4	B5	H1	H2			
UPM2 15-70 ES	113	17	132	84	51	54	39	109	G 1	2.1	-

Technical data

System pressure:	Max. 1.0 MPa (10 bar)	Enclosure class:	IP44
Minimum inlet pressure:	0.05 MPa (0.5 bar) at 95 °C liquid temperature	Insulation class:	H
Liquid temperature:	+2 °C to +95 °C (TF 95)	Equipment class:	I
Motor protection:	Overload protection	Approval and marking:	VDE, CE

UPM2 15-40 AOS, 1 x 230 V, 50/60 Hz

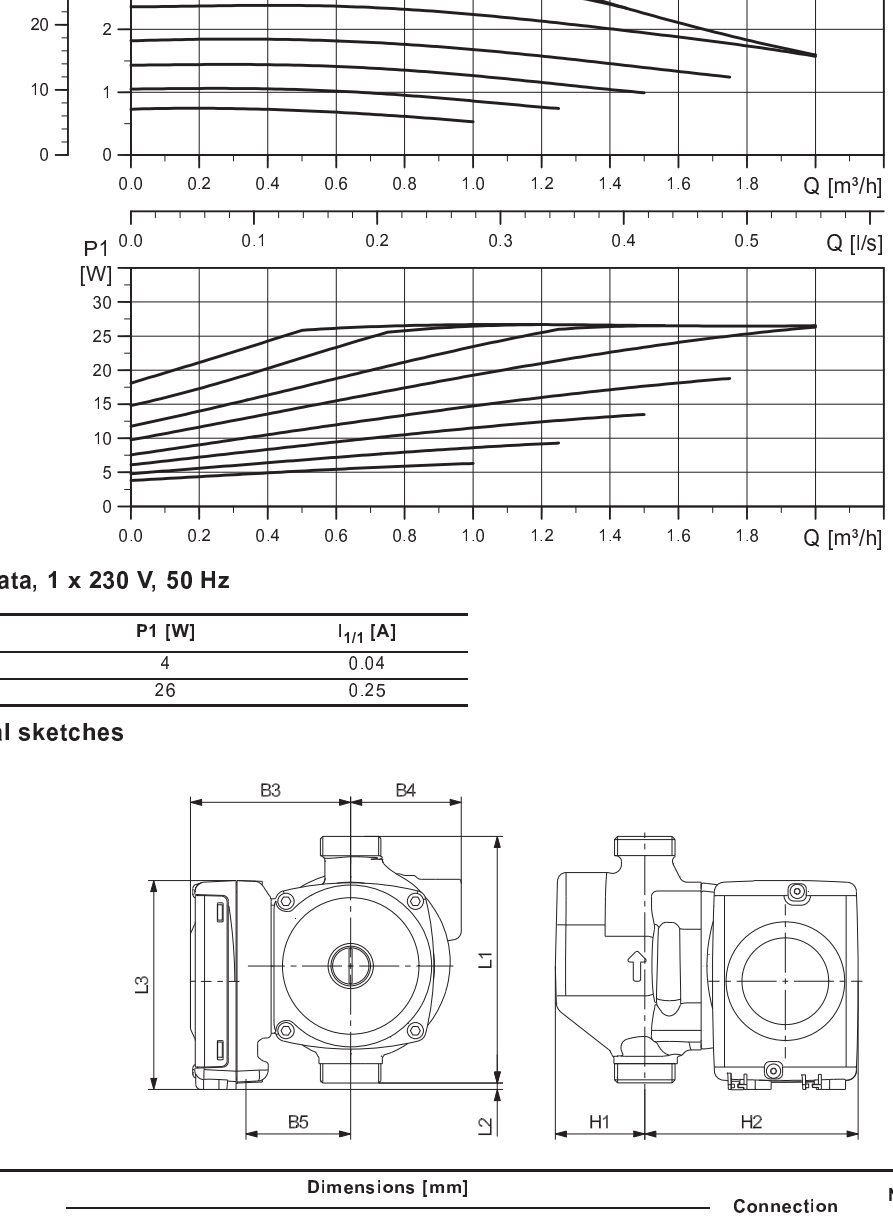

EEI ≤ 0.23

TM05 5327 3612

Electrical data, 1 x 230 V, 50 Hz

Speed	P1 [W]	$I_{1/1}$ [A]
Min.	4	0.04
Max.	26	0.25

Dimensional sketches

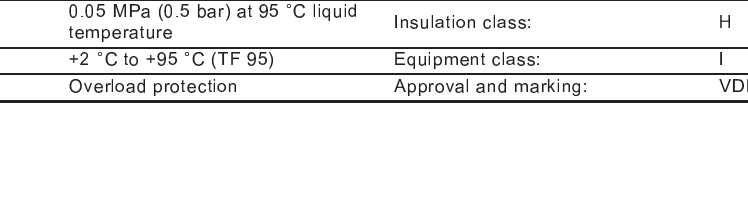

TM05 4932 2812

Pump type	Dimensions [mm]								Connection	Net weight [kg]	Quantity per pallet
	L1	L2	L3	B3	B4	B5	H1	H2			
UPM2 15-40 AOS	130	22	132	84	58	54	47	112	G 1	2.1	-

Technical data

System pressure:	Max. 1.0 MPa (10 bar)	Enclosure class:	IP44
Minimum inlet pressure:	0.05 MPa (0.5 bar) at 95 °C liquid temperature	Insulation class:	H
Liquid temperature:	+2 °C to +95 °C (TF 95)	Equipment class:	I
Motor protection:	Overload protection	Approval and marking:	VDE, CE

UPM2 15-50 AOS, 1 x 230 V, 50/60 Hz

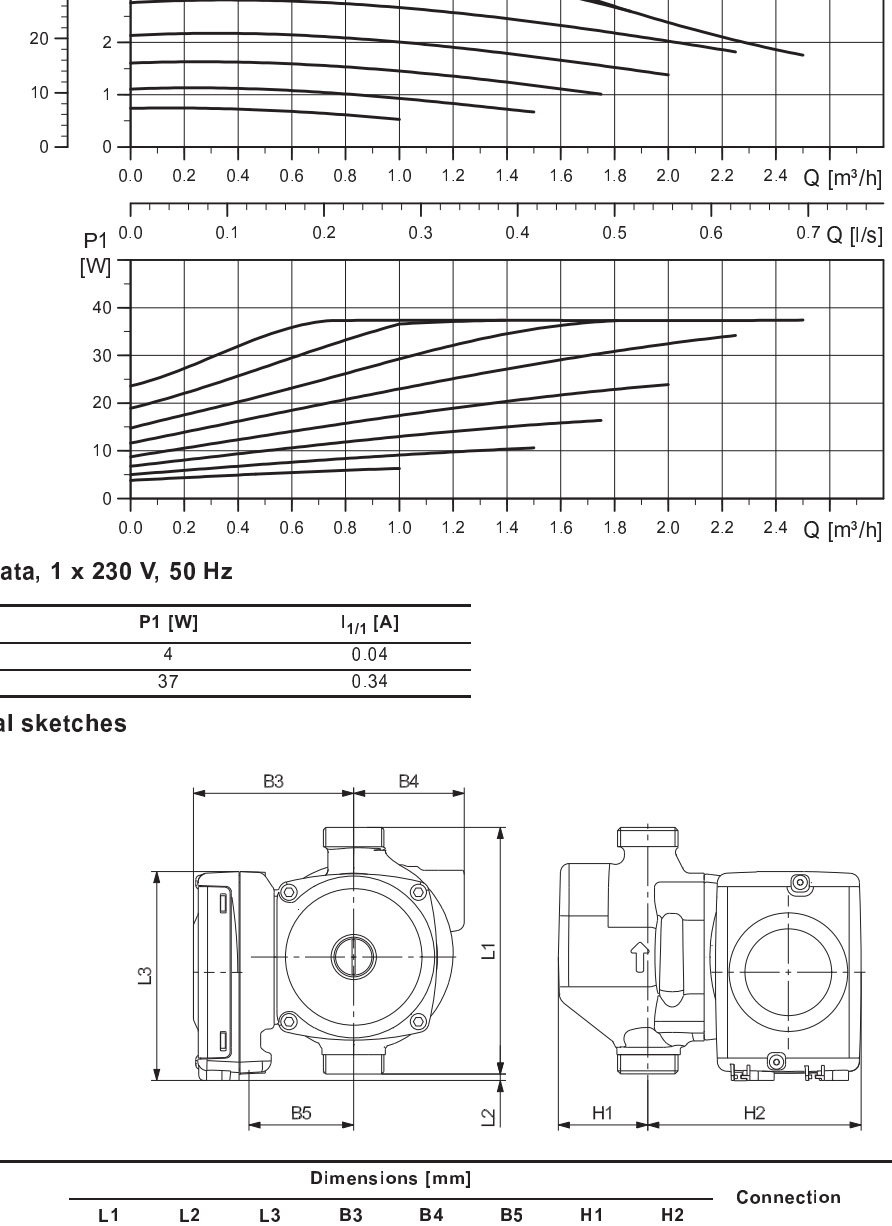

EEI ≤ 0.23

TM05 5326 3612

Electrical data, 1 x 230 V, 50 Hz

Speed	P1 [W]	$I_{1/1}$ [A]
Min.	4	0.04
Max.	37	0.34

Dimensional sketches

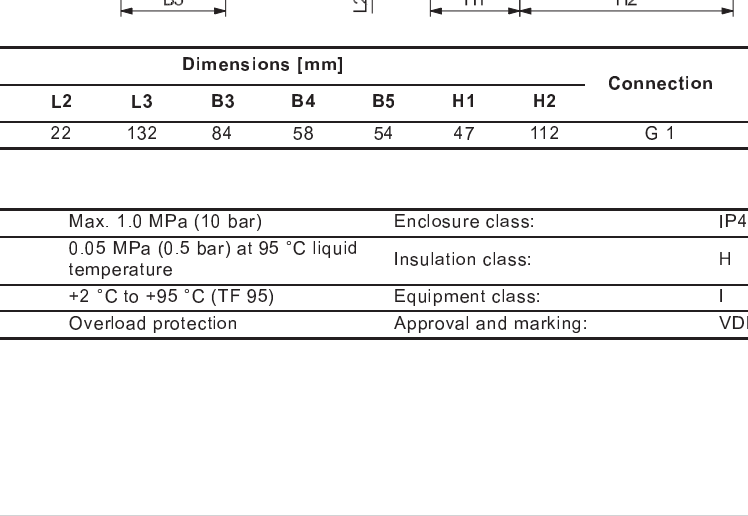

TM05 4932 2812

Pump type	Dimensions [mm]								Connection	Net weight [kg]	Quantity per pallet
	L1	L2	L3	B3	B4	B5	H1	H2			
UPM2 15-50 AOS	130	22	132	84	58	54	47	112	G 1	2.1	-

Technical data

System pressure:	Max. 1.0 MPa (10 bar)	Enclosure class:	IP44
Minimum inlet pressure:	0.05 MPa (0.5 bar) at 95 °C liquid temperature	Insulation class:	H
Liquid temperature:	+2 °C to +95 °C (TF 95)	Equipment class:	I
Motor protection:	Overload protection	Approval and marking:	VDE, CE

UPM2 15-60 AOS, 1 x 230 V, 50/60 Hz

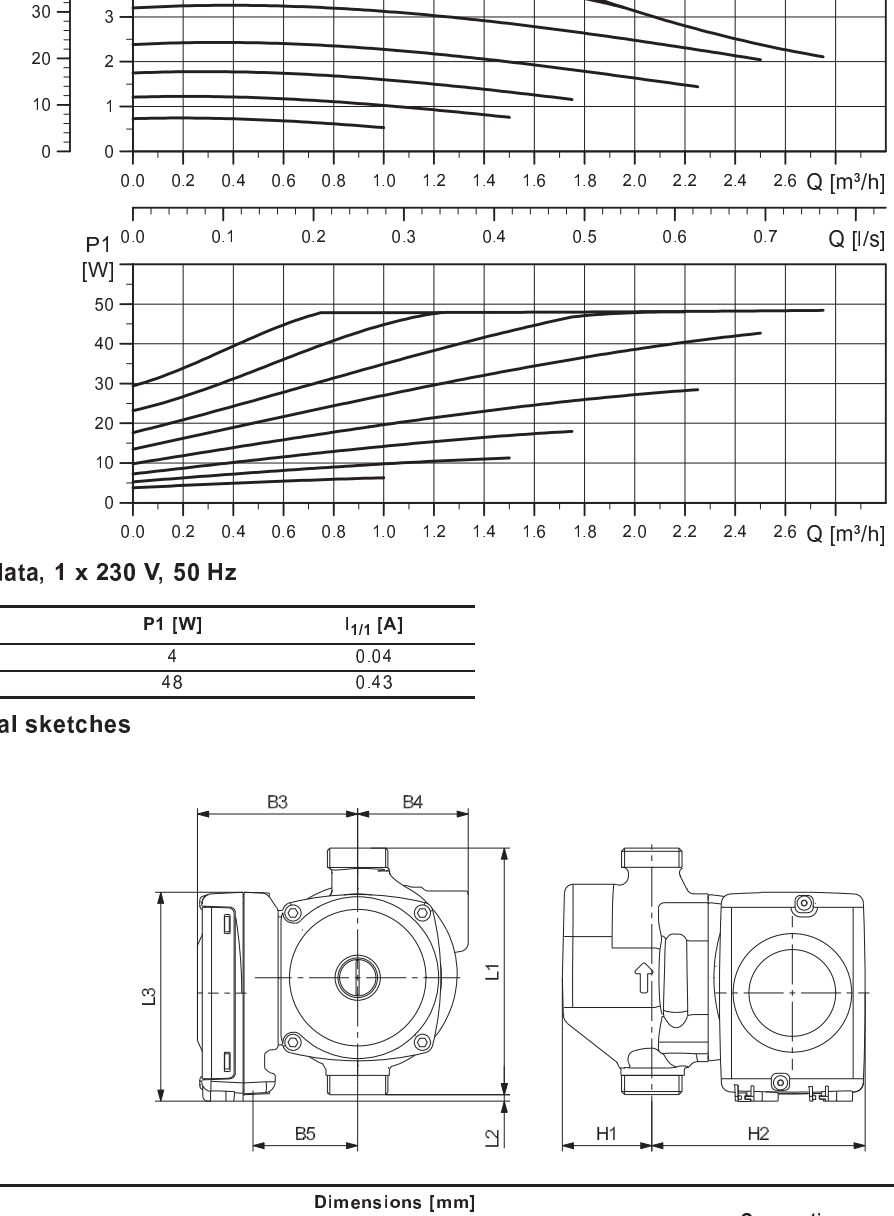

EEI ≤ 0.23

TM05 5325 3612

Electrical data, 1 x 230 V, 50 Hz

Speed	P1 [W]	$I_{1/1}$ [A]
Min.	4	0.04
Max.	48	0.43

Dimensional sketches

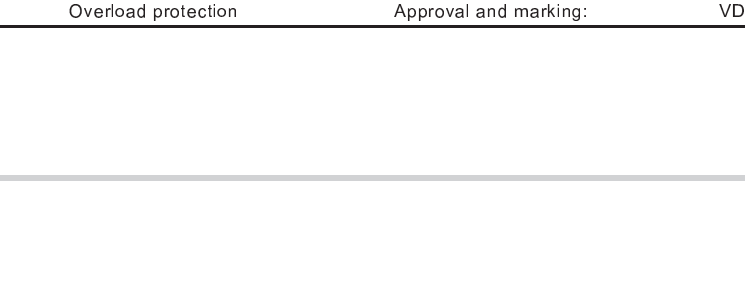

TM05 4932 2812

Pump type	Dimensions [mm]								Connection	Net weight [kg]	Quantity per pallet
	L1	L2	L3	B3	B4	B5	H1	H2			
UPM2 15-60 AOS	130	22	132	84	58	54	47	112	G 1	2.1	-

Technical data

System pressure:	Max. 1.0 MPa (10 bar)	Enclosure class:	IP44
Minimum inlet pressure:	0.05 MPa (0.5 bar) at 95 °C liquid temperature	Insulation class:	H
Liquid temperature:	+2 °C to +95 °C (TF 95)	Equipment class:	I
Motor protection:	Overload protection	Approval and marking:	VDE, CE

UPM2 15-70 AOS, 1 x 230 V, 50/60 Hz

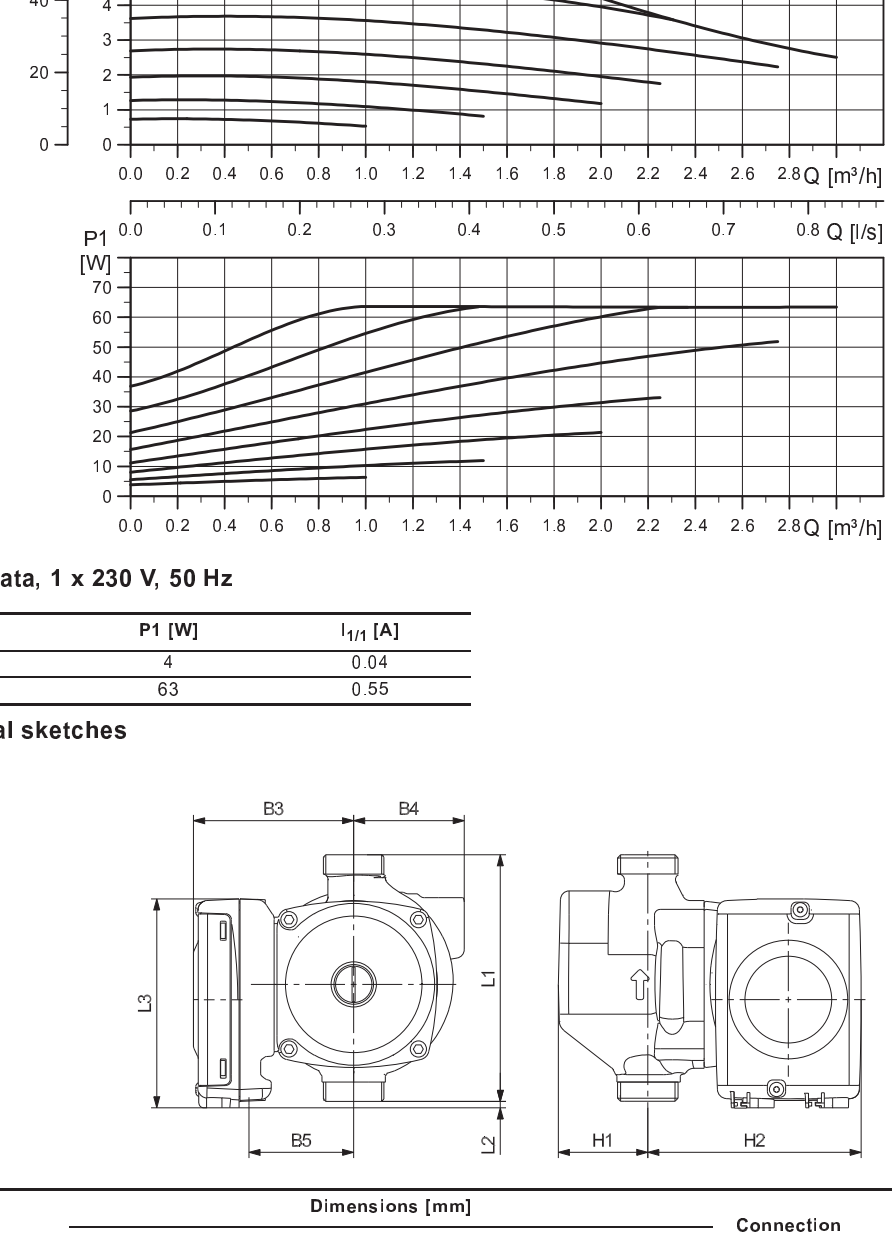

EEI ≤ 0.23

TM05 5324 3612

Electrical data, 1 x 230 V, 50 Hz

Speed	P1 [W]	$I_{1/1}$ [A]
Min.	4	0.04
Max.	63	0.55

Dimensional sketches

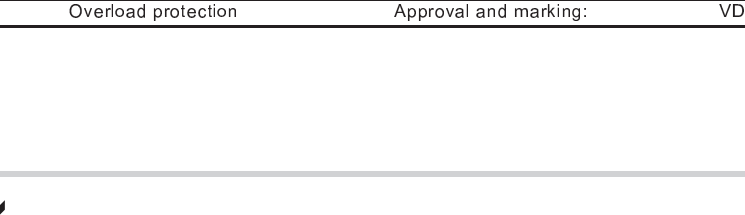

TM05 4932 2812

Pump type	Dimensions [mm]								Connection	Net weight [kg]	Quantity per pallet
	L1	L2	L3	B3	B4	B5	H1	H2			
UPM2 15-70 AOS	130	22	132	84	58	54	47	112	G 1	2.1	-

Technical data

System pressure:	Max. 1.0 MPa (10 bar)	Enclosure class:	IP44
Minimum inlet pressure:	0.05 MPa (0.5 bar) at 95 °C liquid temperature	Insulation class:	H
Liquid temperature:	+2 °C to +95 °C (TF 95)	Equipment class:	I
Motor protection:	Overload protection	Approval and marking:	VDE, CE

9. Accessories

Product	Description	Product number
Power supply plug with cable		
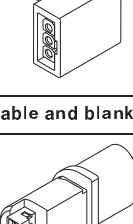 TM05 1102 2111	Volex power supply cable, 2000 mm, H03V2V2-F 3G 0.75 ZW 105 GR, 3 x 0.75 mm^2, with wire pins and moulded cable relief.	97940975
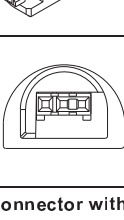 TM05 1103 2111	Molex power supply cable, 2000 mm, H03V2V2-F 3G 0.75 ZW 105 GR, 3 x 0.75 mm^2, with wire pins.	97940977
Signal cable and blanking plug		
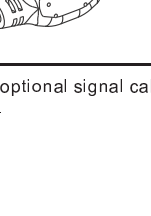 TM05 1106 2111	PWM signal cable, 2000 mm, RKK90 3 x 0.50 ZW 3 x 0.50 mm^2.	97940991
TM05 1107 2111	Blanking plug for PWM signal plug-in.	97823485
NTC connector with cable		
TM05 7994 1713	NTC connector SCK 10152 (25 Ω).	98429931

Note: An optional signal cable is available with two leads only. Note that if a two-lead cable is used, it will not be possible to get the feedback signal from the pump.

10. Approvals and certificates

EC declaration of conformity

We, Grundfos, declare under our sole responsibility that the products marked with **GFMJD (UPM2 variants)**, **GFMJC (UPMGEO variants)** and **GFMJF (UPM2K variants)**, to which this declaration relates, are in conformity with these Council directives on the approximation of the laws of the EC member states:

Low Voltage Directive (2014/35/EU)

Standards used:

- EN 60335-1:2012/AC:2014/A11:2014
- EN 60335-2-51:2003/A1:2008/A2:2012
- EN 62233:2008

EMC Directive (2014/30/EU)

Standards used:

- EN 55014-1:2006/A1:2009/A2:2011
- EN 55014-2:2015
- EN 61000-3-2:2014
- EN 61000-3-3:2013

Ecodesign Directive (2009/125/EC)

Commission Regulation (EC) No 641/2009

Commission Regulation (EC) No 622/2012

Standards used:

- EN 16297-1:2012
- EN 16297-2:2012
- EN 16297-3:2012

EEI ≤ 0.23 (see individual data sheet or name plate).

The benchmark for the most efficient circulators is EEI ≤ 0.20.

Warning

This appliance can be used by children aged from 8 years and above and persons with reduced physical, sensory or mental capabilities or lack of experience and knowledge if they have been given supervision or instruction concerning use of the appliance in a safe way and understand the hazards involved. Children shall not play with the appliance. Cleaning and user maintenance shall not be made by children without supervision.

Bjerringbro, 20th of April, 2016

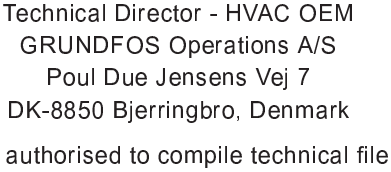

Preben Jakobsen
Technical Director - HVAC OEM
GRUNDFOS Operations A/S
Poul Due Jensens Vej 7
DK-8850 Bjerringbro, Denmark

Person authorised to compile technical file and empowered to sign the EC declaration of conformity.

VDE certificate

These pumps are certified by VDE.

Product code: GFMJC (UPM GEO), GFMJD (UPM2), GFMJF (UPM2K).

VDE certificate: No. 40014569.

This Marks Approval forms the basis of the EC declaration of conformity and the CE marking by the manufacturer or his agent and proves the conformity with the essential safety requirements of the EC Low Voltage Directive (2014/35/EU) including amendments.

Grundfos Product Chemical Compliance declaration concerning the non-use of certain chemical substances

GRUNDFOS Holding A/S and its subsidiaries are aware of their responsibilities and are committed not to use hazardous substances in their products.

Grundfos products manufactured and placed on the market within the European Union (EU) and the European Economic Area (EEA) comply with the following EU chemical legislation:

- REACH Regulation; Candidate List of SVHC, Restriction List and Authorization List (EC 1907/2006)
- RoHS directives (2002/95/EC and 2011/65/EU)
- Battery directives (2006/66/EC and 493/2012)
- Packaging and Packaging Waste directives (94/62/EC and 2004/12/EC)
- Ozone Depleting Substances directives (EC 1005/2009 and 2037/2000)
- Persistent Organic Pollutants directive (EC 850/2004)

Today, Grundfos products are not fully covered by the RoHS and WEEE directives.

In regards to the WEEE-directive (2002/96/EC) amended by directive (2012/19/EC) and its impact on circulators, the Grundfos position is that Grundfos sees circulators exempted in 4 (c) (large scale fixed installations…).

The RoHS directives on the restriction of the use of certain hazardous substances in electrical and electronic equipment (EEE) will in 2019 apply to all EEE except for the ones explicitly excluded - see in the position paper from Europump what pumps are considered excluded. Reference is made to the position paper from Europump (http://europump.net/publications/position-papers).

Grundfos strives on a voluntary basis to be RoHS-compliant regarding the non-use of certain hazardous substances in Grundfos products.

All suppliers of the raw materials and components to Grundfos Holding A/S and its subsidiaries are under contractual obligation to comply with the European chemical legislation.

To ensure that Grundfos is compliant, we have taken the following initiatives:

- Grundfos has launched the Grundfos Focus List in order to give our suppliers, contractors and other relevant stakeholder world wide a tool to help comply with chemical legislation. Grundfos has prepared the Grundfos Focus List, which bans or restricts the use of certain chemical substances in Grundfos products, Grundfos production processes and at Grundfos facilities (www.grundfos.com/focus-list)
- Grundfos continuously performs audits of their suppliers to ensure compliance with their contractual obligation to comply with the chemical legislation.
- Grundfos does not accept banned or restricted hazardous substances in their products. It is a standard task in product development projects to ensure that banned or restricted hazardous substances are not used.

be think innovate

The name Grundfos, the Grundfos logo, and **be think innovate** are registered trademarks owned by Grundfos Holding A/S or Grundfos A/S, Denmark. All rights reserved worldwide.

© Copyright Grundfos Holding A/S

97906571 0416

ECM: 1183103

GRUNDFOS HVAC OEM Division . DK-8850 Bjerringbro . Denmark
Telephone: +45 87 50 50 50
www.grundfos.com

GRUNDFOS