MTH 10, MTH 15

New pump types including replacement guide for MTH 8, 12, 16

Immersible pumps

50/60 Hz

be
think
innovate

GRUNDFOS

Table of contents

1. Product description **3**
Pump . . . 3
Motor . . . 3

2. Construction **4**
MTH 10, 15 . . . 4

3. Introduction to performance curves **5**

4. Performance curves and technical data **6**
MTH 10, 50 Hz . . . 6
MTH 15, 50 Hz . . . 8
MTH 10, 60 Hz . . . 10
MTH 15, 60 Hz . . . 12

5. Motor data **14**
Motors, MTH, 50 Hz . . . 14
Motors, MTH, 60 Hz . . . 14
Motors, MTH, 50 Hz, 3 x 200 V . . . 15
Motors, MTH, 50/60 Hz, 3 x 200 V* . . . 15

6. Replacement guide **16**
How to use the replacement guide . . . 16
MTH 10 to replace MTH 8, 50 Hz . . . 18
MTH 10 to replace MTH 12, 50 Hz . . . 20
MTH 15 to replace MTH 16, 50 Hz . . . 22
MTH 10 to replace MTH 8, 60 Hz . . . 24
MTH 10 to replace MTH 12, 60 Hz . . . 26
MTH 15 to replace MTH 16, 60 Hz . . . 28

7. Grundfos Product Center **30**

1. Product description

TM06 9574 2717

Fig. 1 MTH pump

MTH pumps are vertical multistage centrifugal pumps designed for pumping of cooling lubricants for machine tools, condensate transfer and similar applications.

The pumps are designed to be mounted on top of tanks with the chamber stack immersed in the pumped liquid.

The pumps come in various pump sizes and have various numbers of stages to provide the flow, the pressure and the installation length required. To meet specific depths of tanks or containers, the immersible length of the pump can be varied using empty chambers.

Pump

The pump has optimised hydraulics, various types of connections, a motor stool, a given number of chambers and various other parts.

The pumps are available in two material versions:

- standard range (A-version) with wetted parts of cast iron and stainless steel
- stainless steel version (I-version) with all wetted parts of stainless steel EN/DIN 1.4301 or better.

The mounting flange dimensions are according to DIN 5440. The mechanical shaft seal is according to EN 12 756.

Motor

MTH pumps are fitted with Grundfos standard MG motors designed to EN standards.

2. Construction

MTH 10, 15

Sectional drawing

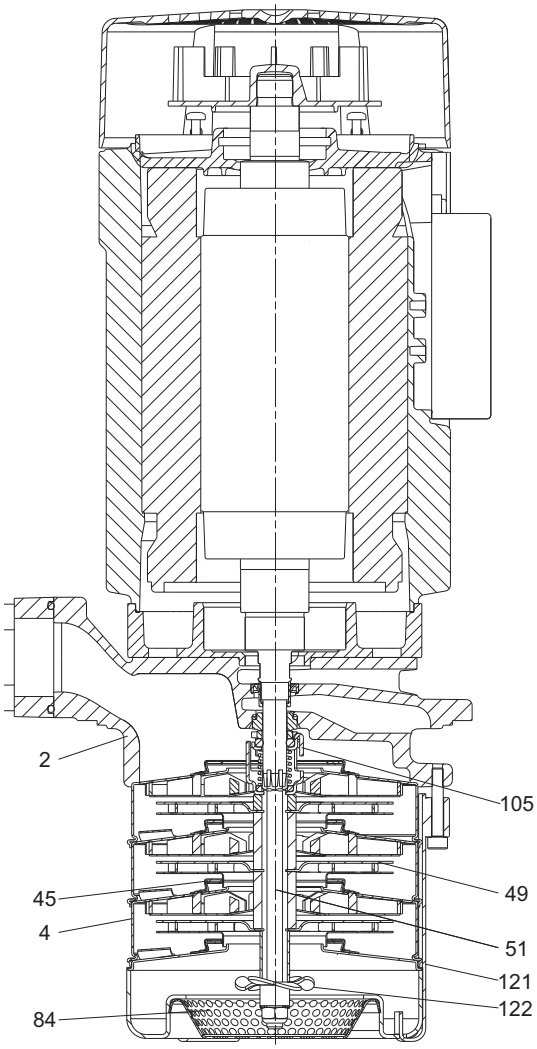

Fig. 2 MTH 10, 15

Materials

Pos.	Description	A-version			I-version		
		Materials	EN/DIN	AISI/ASTM	Materials	EN/DIN	AISI/ASTM
2	Pump head	Cast iron	EN-GJL-200	ASTM 25B	Stainless steel	1.4408	AISI 316LN
4	Chamber	Stainless steel	1.4301	AISI 304	Stainless steel	1.4301	AISI 304
45	Neck ring	PTFE	-	-	PTFE	-	-
49	Impeller	Stainless steel	1.4301	AISI 304	Stainless steel	1.4301	AISI 304
51	Pump shaft	Stainless steel	1.4057	AISI 431	Stainless steel	1.4057	AISI 431
84	Suction strainer	Stainless steel	1.4301	AISI 304	Stainless steel	1.4301	AISI 304
105	Shaft seal	AQQV	-	-	AQQV	-	-
121	Strap	Stainless steel	1.4301	AISI 304	Stainless steel	1.4301	AISI 304
122	Priming screw	Stainless steel	1.4301	AISI 304	Stainless steel	1.4301	AISI 304

3. Introduction to performance curves

How to read the curve charts

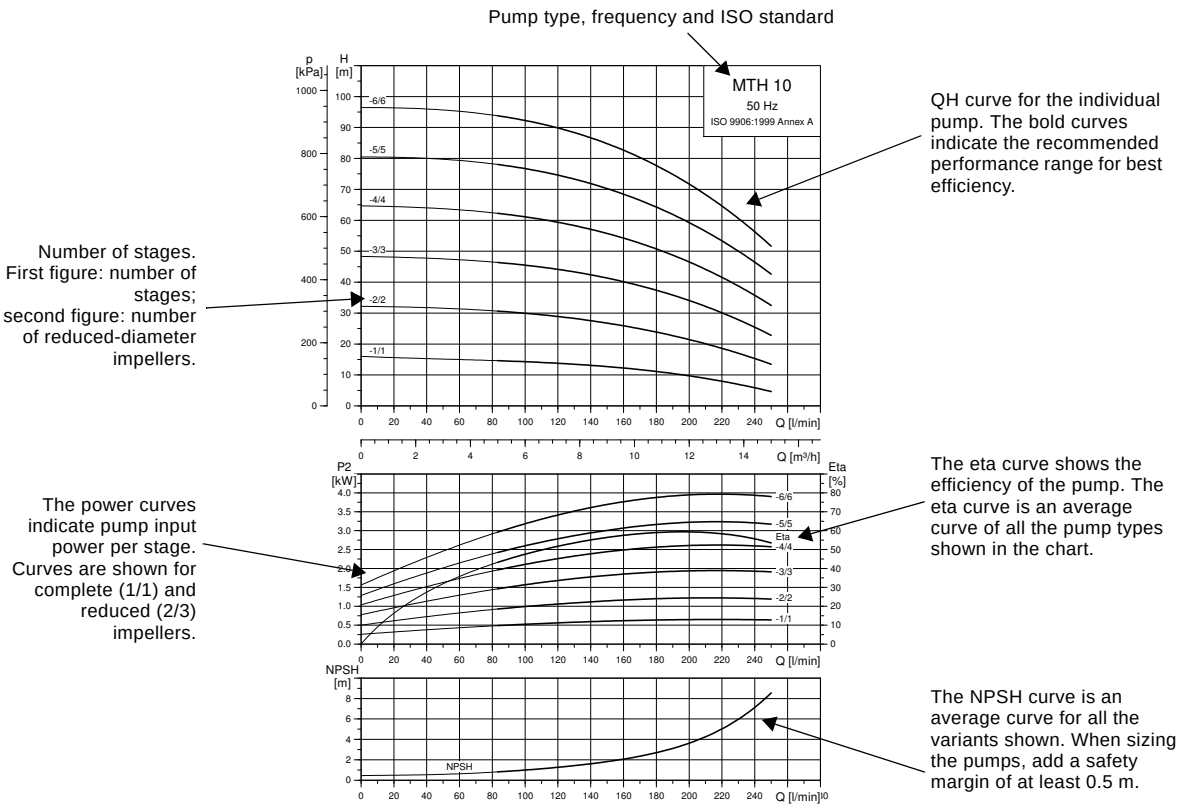

Fig. 3 Example of an MTH curve chart

Guidelines to performance curves

The guidelines below apply to the curves shown on the following pages:

- Tolerances to ISO 9906, Annex A, if indicated.
- The motors used for the measurements are standard Grundfos motors (MG or MGE).
- Measurements have been made with airless water at a temperature of 20 °C.
- The curves apply to a kinematic viscosity of υ = 1 mm^2/s (1 cSt).
- Due to the risk of overheating, the pumps must not be used at a flow below the minimum flow rate.
- QH curves of the individual pumps are based on current motor speeds.
- The curve below shows the minimum flow rate as a percentage of the rated flow rate in relation to the liquid temperature.

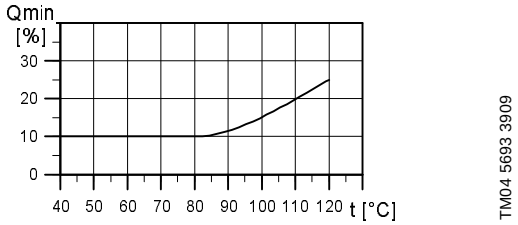

Fig. 4 Minimum flow rate

4. Performance curves and technical data

MTH 10, 50 Hz

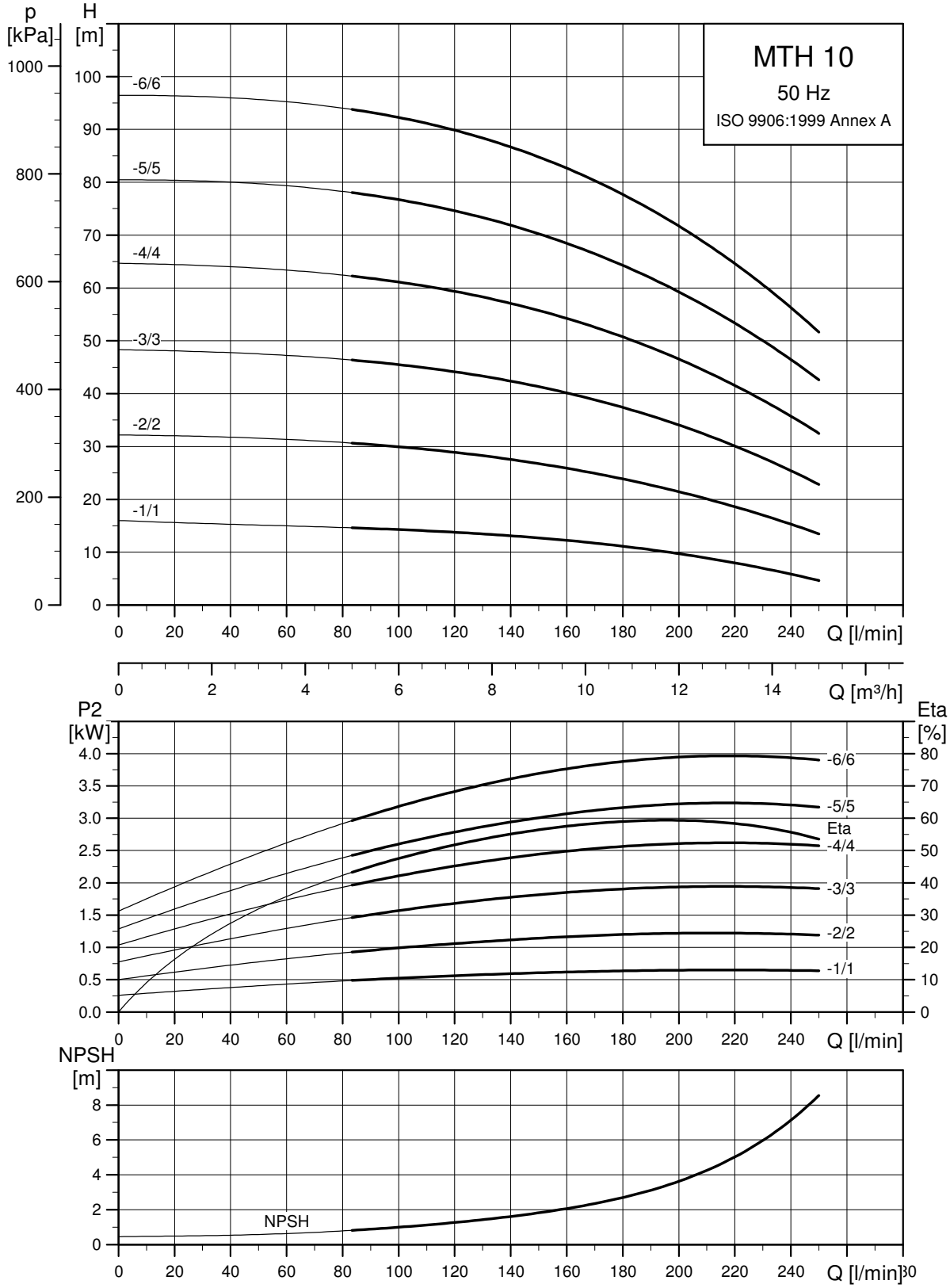

Dimensional sketches

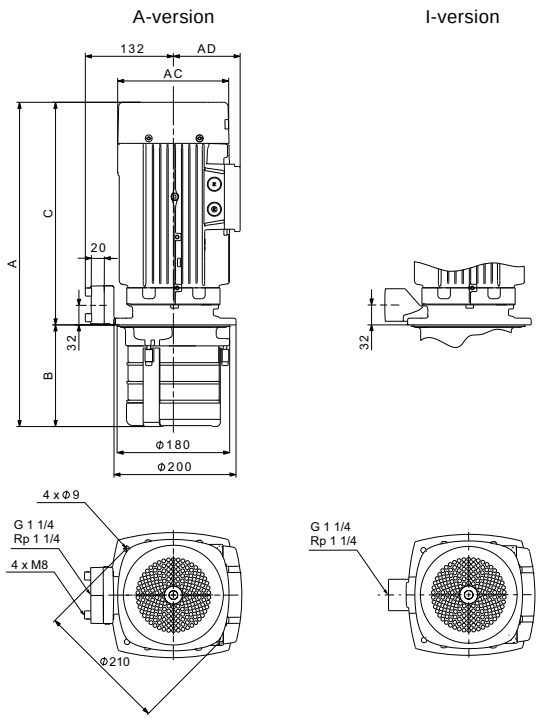

TM06 9507 2517

Dimensions and weights

Pump type	MTH						
	P2 [kW]	Dimensions [mm]					Net weight [kg]
		A	B	C	AC	AD	
MTH 10-1/1	1.1	374/354*	105	269/249*	141	109	18.5 / 17*
MTH 10-2/2	1.1	404/384*	135	269/249*	141	109	19.7 / 18.2*
MTH 10-3/3	2.2	524	165	359	178	110	30
MTH 10-4/4	3	572	195	377	198	120	33.9
MTH 10-5/5	3	602	225	377	198	120	35.1
MTH 10-6/6	4	669	255	414	220	134	46.6

* Applies to pumps fitted with 200 V motors.
The maximum immersion depth is 255 mm.
For information about electrical data, see section *Motor data* on page 14.

MTH 15, 50 Hz

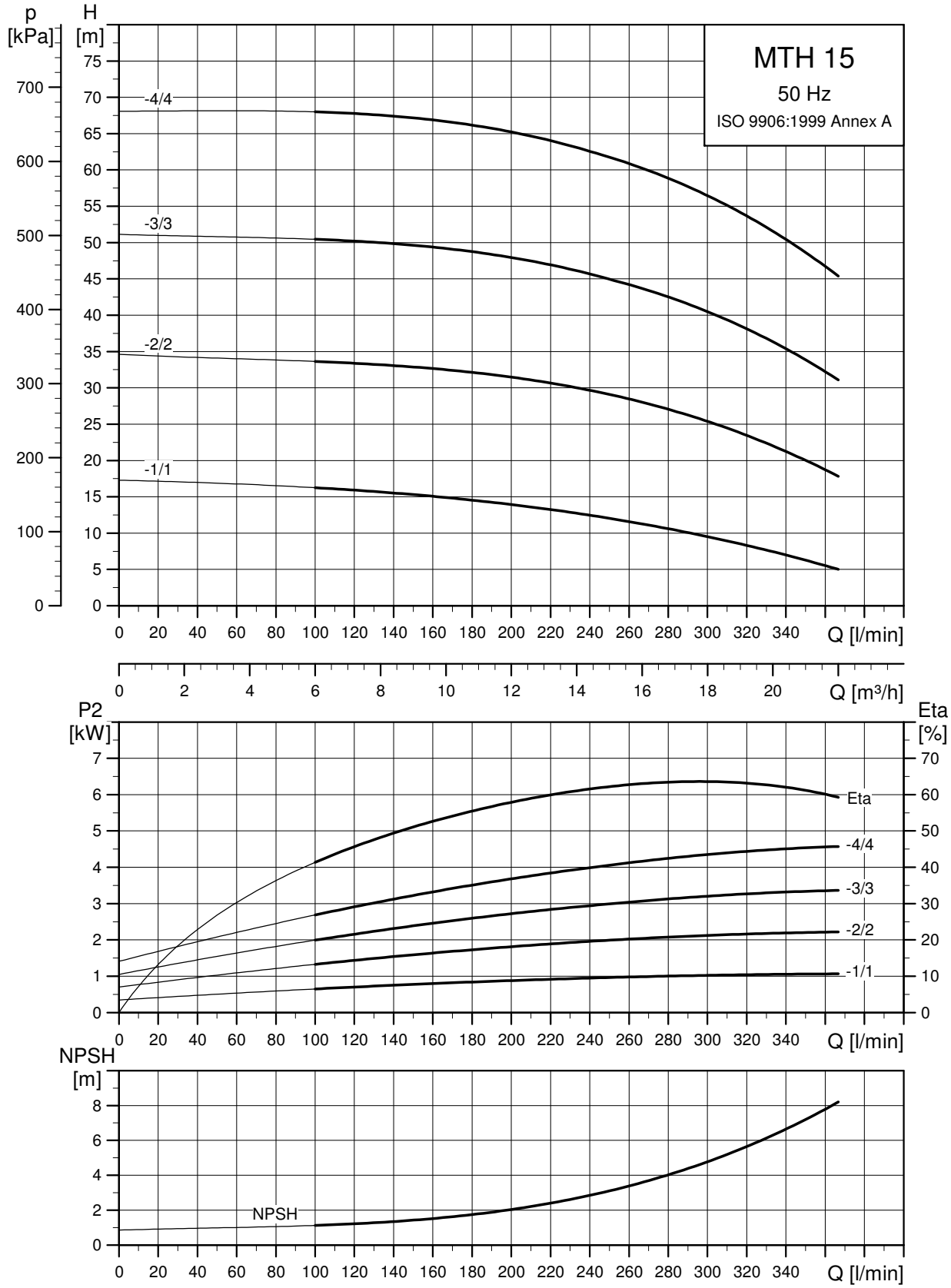
MTH 15
50 Hz
ISO 9906:1999 Annex A
p [kPa]
H [m]
-4/4
-3/3
-2/2
-1/1
Q [l/min]
Q [m³/h]
P2 [kW]
Eta [%]
Eta
NPSH [m]
NPSH
TM06 8921 3118

Dimensional sketches

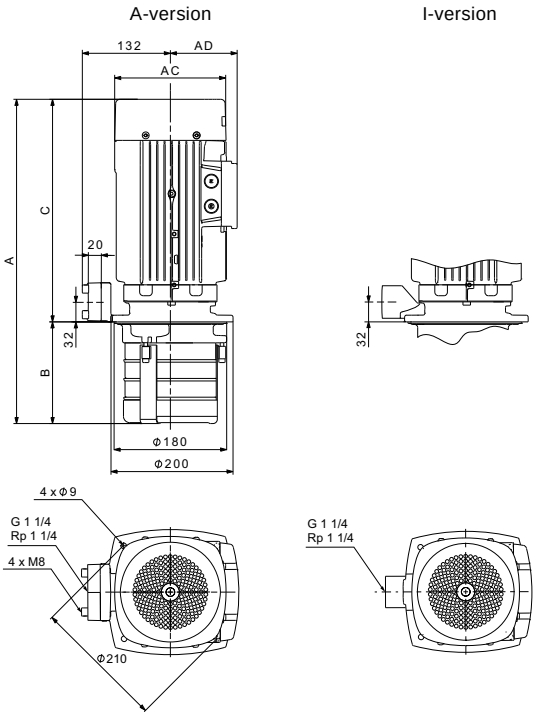

Dimensions and weights

Pump type	MTH						
	P2 [kW]	Dimensions [mm]					Net weight [kg]
		A	B	C	AC	AD	
MTH 15-1/1	1.1	374/354*	105	269/249*	141	109	18.5 / 17*
MTH 15-2/2	2.2	494	135	359	178	110	28
MTH 15-3/3	3	542	165	377	198	120	31.9
MTH 15-4/4	4	609	195	414	220	134	42.6

* Applies to pumps fitted with 200 V motors.
The maximum immersion depth is 255 mm.
For information about electrical data, see section *Motor data* on page 14.

MTH 10, 60 Hz

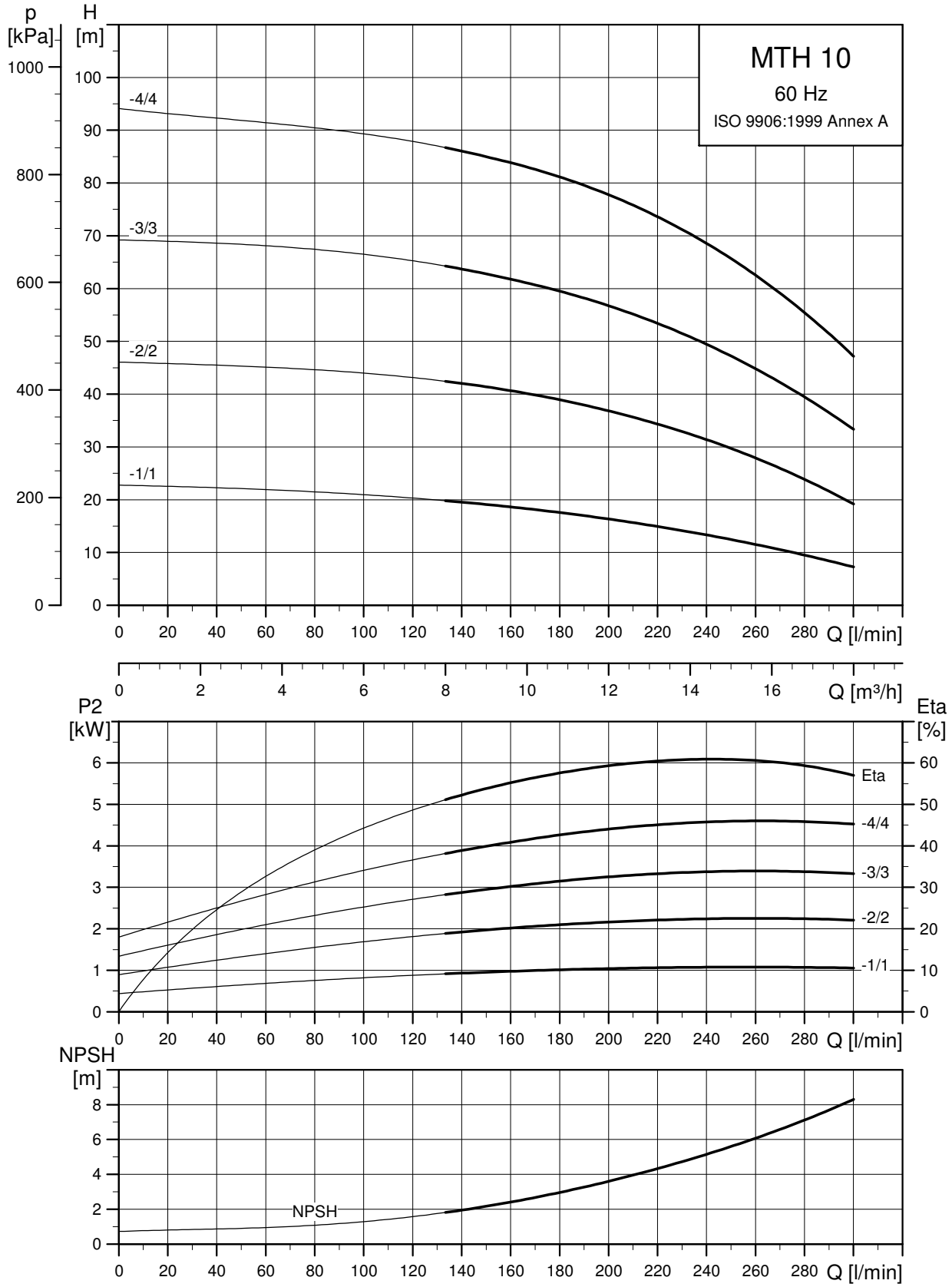
MTH 10
60 Hz
ISO 9906:1999 Annex A
p [kPa]
H [m]
-4/4
-3/3
-2/2
-1/1
Q [l/min]
Q [m³/h]
P2 [kW]
Eta [%]
Eta
NPSH [m]
NPSH
TM06 8920 3118

Dimensional sketches

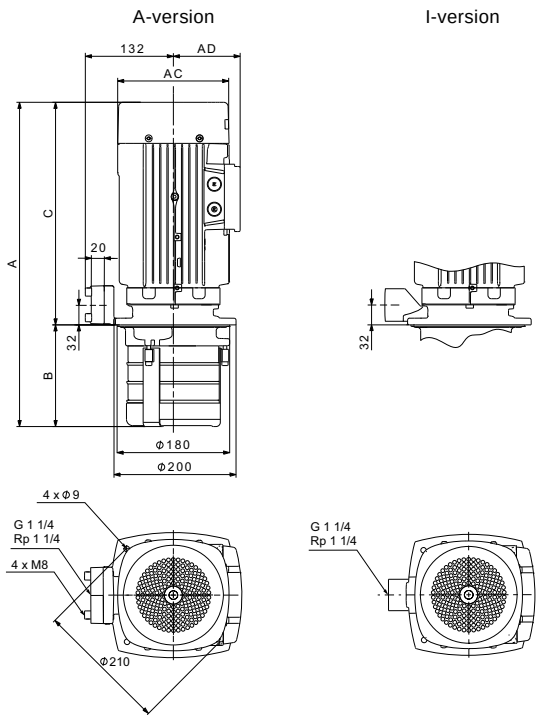

Dimensions and weights

Pump type	MTH						
	P2 [kW]	Dimensions [mm]					Net weight [kg]
		A	B	C	AC	AD	
MTH10-1/1	1.1	374/354*	105	269/249*	141	109	18.5 / 17*
MTH10-2/2	2.2	494	135	359	178	110	28
MTH10-3/3	3	542	165	377	198	120	31.9
MTH10-4/4	4	609	195	414	220	134	42.6

* Applies to pumps fitted with 200 V motors.
The maximum immersion depth is 255 mm.
For information about electrical data, see section *Motor data* on page 14.

MTH 15, 60 Hz

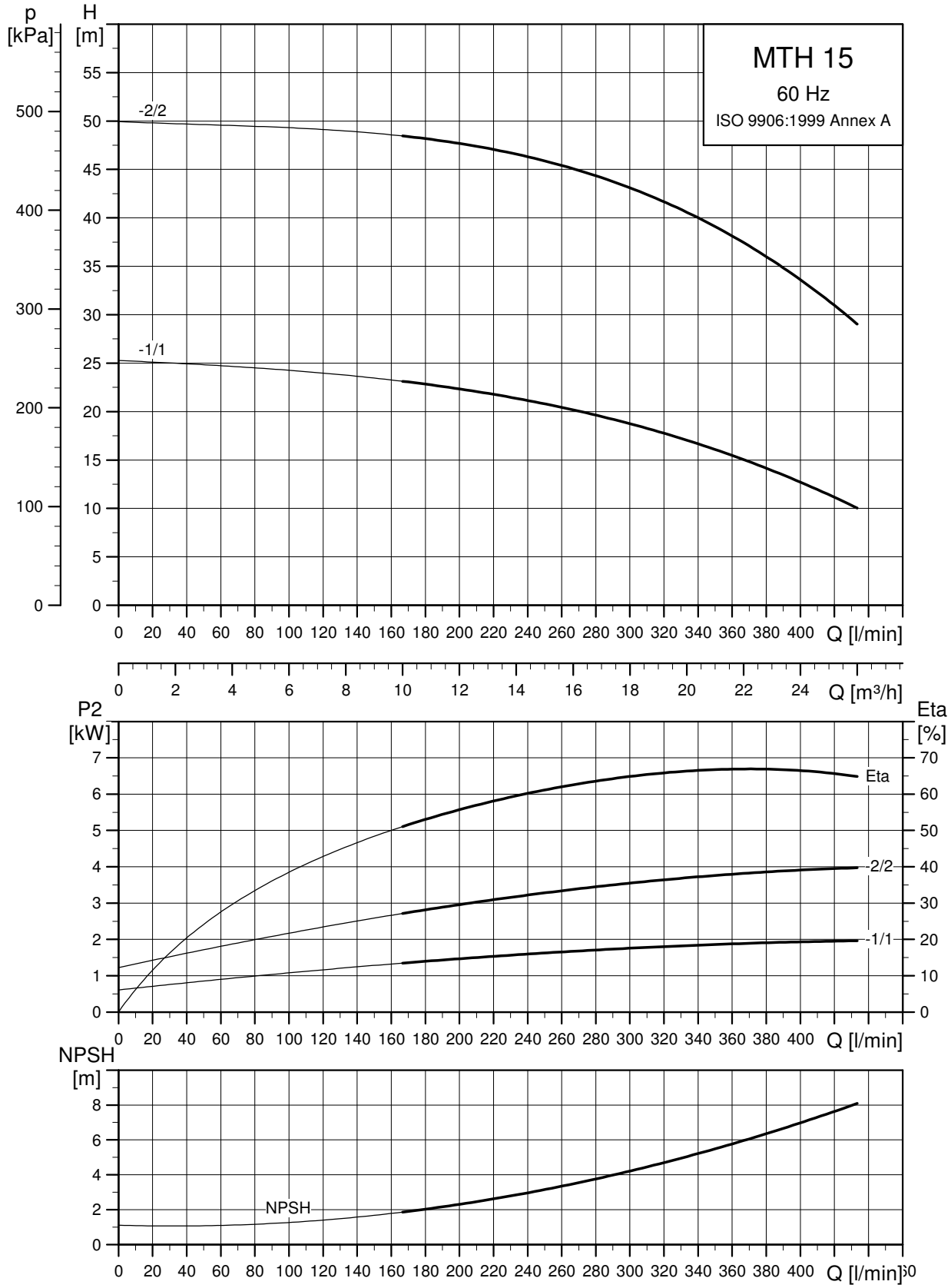
MTH 15
60 Hz
ISO 9906:1999 Annex A
p [kPa]
H [m]
-2/2
-1/1
Q [l/min]
Q [m³/h]
P2 [kW]
Eta [%]
Eta
NPSH [m]
NPSH
TM06 8922 3118

Dimensional sketches

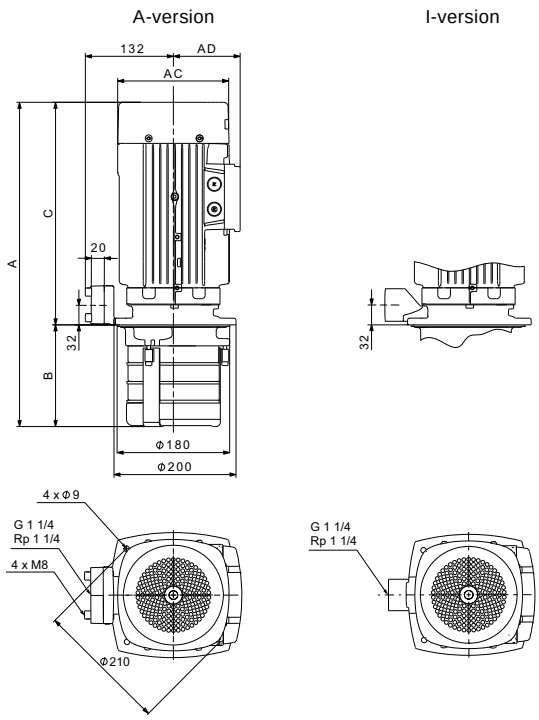

TM06 9507 2517

Dimensions and weights

Pump type	MTH						
	P2 [kW]	Dimensions [mm]					Net weight [kg]
		A	B	C	AC	AD	
MTH 15-1/1	2.2	464	105	359	178	110	26
MTH 15-2/2	4	549	135	414	220	134	38.6

* Applies to pumps fitted with 200 V motors.
The maximum immersion depth is 255 mm.
For information about electrical data, see section *Motor data* on page 14.

5. Motor data

Motors, MTH, 50 Hz

Motor make	P2 [kW]	Frame size	Standard voltage [V]	$I_{1/1}$ [A]	Cos $\varphi_{1/1}$	η [%]	Motor efficiency class	I_{start} [A]	Speed [min^{-1}]
MG	0.55	71	220-240D/380-415Y	2.50 / 1.44	0.8 - 0.70 / 0.76 - 0.85	80.0 - 80.0 / 81.5 - 83	IE3	14.5 - 8.4 / 15.5 - 8.9	2,830 - 2,880
MG	0.75	80	220-240D/380-415Y	3.30 / 1.90	0.81 - 0.71 / 0.77 - 0.86	81.7 - 81.2 / 82.9 - 83.5	IE3	19.1 - 11 / 20.5 - 11.8	2,840 - 2,870
MG	1.1	80	220-240D/380-415Y	4.35 / 2.50	0.83 - 0.76 / 0.80 - 0.88	82.8 - 83.4 / 83.4 - 85.7	IE3	19.6 - 11.3 / 21.8 - 12.5	2,840 - 2,870
MG	1.5	90	220-240D/380-415Y	5.45 / 3.15	0.87 - 0.82 / 0.81 - 0.9	83.8 - 84.3 / 83.9 - 84.5	IE3	46.3 - 26.8 / 50.7 - 29.3	2,890 - 2,910
MG	2.2	90	220-240D/380-415Y	7.70 / 4.45	0.89 - 0.87 / 0.85 - 0.91	85.9 - 86.8 / 85.1 - 87	IE3	65.5 - 37.8 / 73.2 - 42.3	2,890 - 2,910
MG	3	100	220-240D/380-415Y	11.0 / 6.30	0.87 - 0.82 / 0.79 - 0.91	86.6 - 86.8 / 86.7 - 88.2	IE3	92.4 - 52.9 / 101.2 - 58	2,900 - 2,920
MG	4	112	220-240D/380-415Y	13.6 / 7.90	0.87 - 0.87 / 0.82 - 0.91	88.3 - 88.6 / 88.2 - 88.5	IE3	136-79 / 151 - 87.7	2,920 - 2,940

Motors, MTH, 60 Hz

Motor make	P2 [kW]	Frame size	Standard voltage [V]	$I_{1/1}$ [A]	Cos $\varphi_{1/1}$	η [%]	Motor efficiency class	I_{start} [A]	Speed [min^{-1}]
MG	0.55	71	220-255D/380-440Y	2.15 - 2.05 / 1.25 - 1.20	0.8 - 0.70 / 0.76 - 0.85	80.0 - 80.0 / 81.5 - 83	IE3	10.8 - 6.3 / 12.3 - 7.2	3,390 - 3,460
MG	0.75	80	220-255D/380-440Y	2.95 - 2.75 / 1.70 - 1.60	0.81 - 0.71 / 0.77 - 0.86	81.7 - 81.2 / 82.9 - 83.5	IE3	17.7 - 10.2 / 20.4 - 11.8	3,410 - 3,470
MG	1.1	80	220-255D/380-440Y	4.15 - 4.00 / 2.40 - 2.30	0.83 - 0.76 / 0.80 - 0.88	82.8 - 83.4 / 83.4 - 85.7	IE2 - IE3	17.8 - 10.3 / 20 - 11.5	3,420 - 3,470
MG	1.5	90	220-277D/380-480Y	5.35 - 4.70 / 3.10 - 2.70	0.87 - 0.82 / 0.81 - 0.9	83.8 - 84.3 / 83.9 - 84.5	IE2 - IE3	41.7 - 24.2 / 49.4 - 28.4	3,470 - 3,530
MG	2.2	90	220-277D/380-480Y	7.70 - 6.35 / 4.45 - 3.70	0.89 - 0.87 / 0.85 - 0.91	85.9 - 86.8 / 85.1 - 87	IE2 - IE3	60.1 - 34.7 / 69.9 - 40.7	3,470 - 3,530
MG	3	100	220-277D/380-480Y	10.8 - 9.35 / 6.20 - 5.40	0.87 - 0.82 / 0.79 - 0.91	86.6 - 86.8 / 86.7 - 88.2	IE2 - IE3	92.9 - 53.3 / 102.9 - 59.4	3,480 - 3,530
MG	4	112	220-277D/380-480Y	13.6 - 11.8 / 7.80 - 6.80	0.87 - 0.87 / 0.82 - 0.91	88.3 - 88.6 / 88.2 - 88.5	IE2 - IE3	136-78 / 173.5 - 100	3,510 - 3,540

Motors, MTH, 50 Hz, 3 x 200 V

Motor make	P2 [kW]	Frame size	Standard voltage [V]	$I_{1/1}$ [A]	Cos $\varphi_{1/1}$	η [%]	Motor efficiency class	I_{start} [A]	Speed [min^{-1}]
MG	0.55	71	200-220D/346-380Y	2.75 - 2.75 / 1.58 - 1.58	0.80 - 0.70 / 0.76 - 0.85	80.0 - 80.0 / 81.5 - 83	IE3	13.2 - 7.6 / 14.3 - 8.2	2,830 - 2,880
MG	0.75	80	200-220D/346-380Y	3.55 - 3.65 / 2.06 - 2.1	0.81 - 0.71 / 0.77 - 0.86	81.7 - 81.2 / 82.9 - 83.5	IE3	23.4 - 13.6 / 24.5 - 14.1	2,840 - 2,860
MG	1.1	80	200-220D/346-380Y	4.65 - 4.65 / 2.7 - 2.7	0.83 - 0.76 / 0.77 - 0.88	82.8 - 83.4 / 83.4 - 85.7	IE3	20.9 - 12.2 / 37.2 - 21.6	2,840 - 2,870
MG	1.5	90	200-220D/346-380Y	6.3 - 6.35 / 3.6 - 3.7	0.85 - 0.78 / 0.86 - 0.89	85.3 - 84 / 86 - 85.7	IE3	71.8 - 41 / 81.3 - 47.4	2,930 - 2,950
MG	2.2	90	200-220D/346-380Y	8.9 - 9.35 / 5.15 - 5.35	0.85 - 0.87 / 0.87 - 0.89	85.9 - 86.8 / 85.1 - 87	IE3	89 - 51.5 / 100 - 57.2	2,910 - 2,930
MG	3	100	200-220D/346-380Y	12 - 13.4 / 6.9 - 7.7	0.8 - 0.7 / 0.82 - 0.88	87.8 - 87.6 / 88.2 - 88.4	IE3	170.4 - 98 / 188.9 - 108.6	2,940 - 2,950
MG	4	112	200-220D/346-380Y	14.6 - 14 / 8.5 - 8.1	0.88 - 0.84 / 0.87 - 0.9	88.3 - 88.6 / 88.2 - 88.5	IE3	151.8 - 88.4 / 170.8 - 98.8	2,930 - 2,940

Motors, MTH, 50/60 Hz, 3 x 200 V*

Motor make	Frequency [Hz]	P2 [kW]	Frame size	Standard voltage [V]	$I_{1/1}$ [A]	Cos $\varphi_{1/1}$	η [%]	Motor efficiency class	I_{start} [A]	Speed [min^{-1}]
MG	50	0.37	71	200-220D/346-380Y	1.88 - 2.2 / 1.08 - 1.26	0.73 - 0.59	73.8	IE3	15.8 - 9.1 / 17.6 - 10.1	2,900 - 2,920
	60	0.55		200-230D/346-400Y	2.36 - 2.14 / 1.36 - 1.24	0.85 - 0.76	76.8	IE3	11.8 - 6.8 / 12.8 - 7.4	3,390 - 3,460
MG	50	0.55	80	200-220D/346-380Y	2.7 - 2.95 / 1.56 - 1.7	0.67 - 0.51	77.8	IE3	21.1 - 12.2 / 20.1 - 11.6	2,880 - 2,900
	60	0.75		200-230D/346-400Y	3.2 - 2.95 / 1.82 - 1.7	0.86 - 0.77	75.5 - 77	IE2 - IE3	20.2 - 11.5 / 23.6 - 13.6	3,410 - 3,470
MG	50	0.75	80	200/346	5.1 / 2.95	0.56	80.7	IE3	33.2 - 19.2	2,910 - 2,910
	60	1.1		200-230D/346-400Y	5.05 - 5 / 2.9 - 2.9	0.81 - 0.73	84	IE3	25.8 - 14.8 / 30 - 17.4	3,420 - 3,450
MG	50	1.1	90	200-220D/346-380Y	4.8 - 5.1 / 2.8 - 2.95	0.79 - 0.69	82.7	IE3 - IE2	68.2 - 39.8 / 76.5 - 44.3	2,950 - 2,960
	60	1.5		200-230D/346-400Y	6.2 - 5.8 / 3.55 - 3.25	0.89 - 0.86	84 - 85.5	IE2 - IE3	61.4 - 35.1 / 75.4 - 42.3	3,520 - 3,530
MG	50	1.5	90	200-220D/346-380Y	6.8 - 7.95 / 3.95 - 4.6	0.77 - 0.62	81.3	IE2	88.4 - 51.4 / 100.2 - 58	2,940 - 2,950
	60	2.2		200-230D/346-400Y	8.6 - 8 / 5 - 4.55	0.89 - 0.87	85.5 - 86.5	IE2 - IE3	74-43 / 91.2 - 51.9	3,490 - 3,510
MG	50	2.2	100	200-220D/346-380Y	10-13 / 5.75 - 7.5	0.73 - 0.53	85.9	IE3 - IE2	170 - 97.8 / 188.5 - 108.8	2,960 - 2,960
	60	3		200-230D/346-400Y	11.8 - 11 / 6.85 - 6.1	0.88 - 0.82	87.5 - 88.5	IE2 - IE3	148.7 - 86.3 / 183.7 - 101.9	3,520 - 3,540
MG	50	3	112	200-220D/346-380Y	11.6 - 11.4 / 6.65 - 6.6	0.84 - 0.81	87.1	IE3	154.3 - 88.4 / 169.9 - 98.3	2,950 - 2,960
	60	4		200-230D/346-400Y	14.6 - 13 / 8.45 - 7.45	0.9 - 0.87	87.5 - 88.5	IE2 - IE3	129.9 - 75.2 / 154.7 - 88.7	3,510 - 3,540

* The motors can operate at both 50 and 60 Hz and therefore two data sets are provided for each frame size.

6. Replacement guide

How to use the replacement guide

Comparing curves

Example

Existing pump: MTH 12-2.

Select the right MTH 10 pump as follows (see fig. 5):

1. Find and mark the duty point of the MTH 12-2 pump, that is point A.
2. Find the MTH 10 pump(s) matching the duty point of the MTH 12-2 pump.

Result

- If a lower head is acceptable, choose an MTH 10-2/2 pump, that is duty point B.
- If a higher head is acceptable, choose an MTH 3-3/3 pump, that is duty point C.

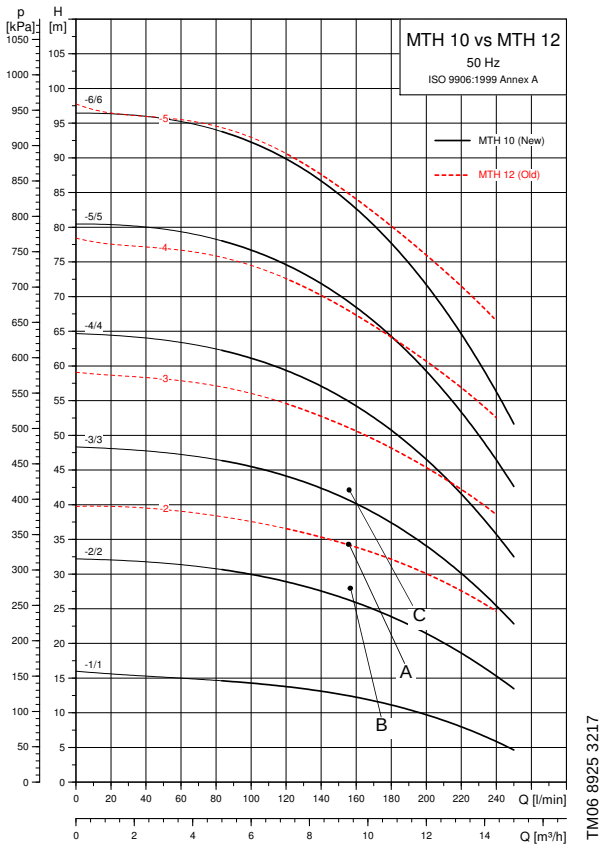

Fig. 5 MTH 10 compared to MTH 12

Using replacement lists

There are two types of replacement lists.

One is based on the comparison of hydraulic performance. The other is based on the comparison of both hydraulic performance and pump dimension "B".

MTH 10 to replace MTH 8, 50 Hz

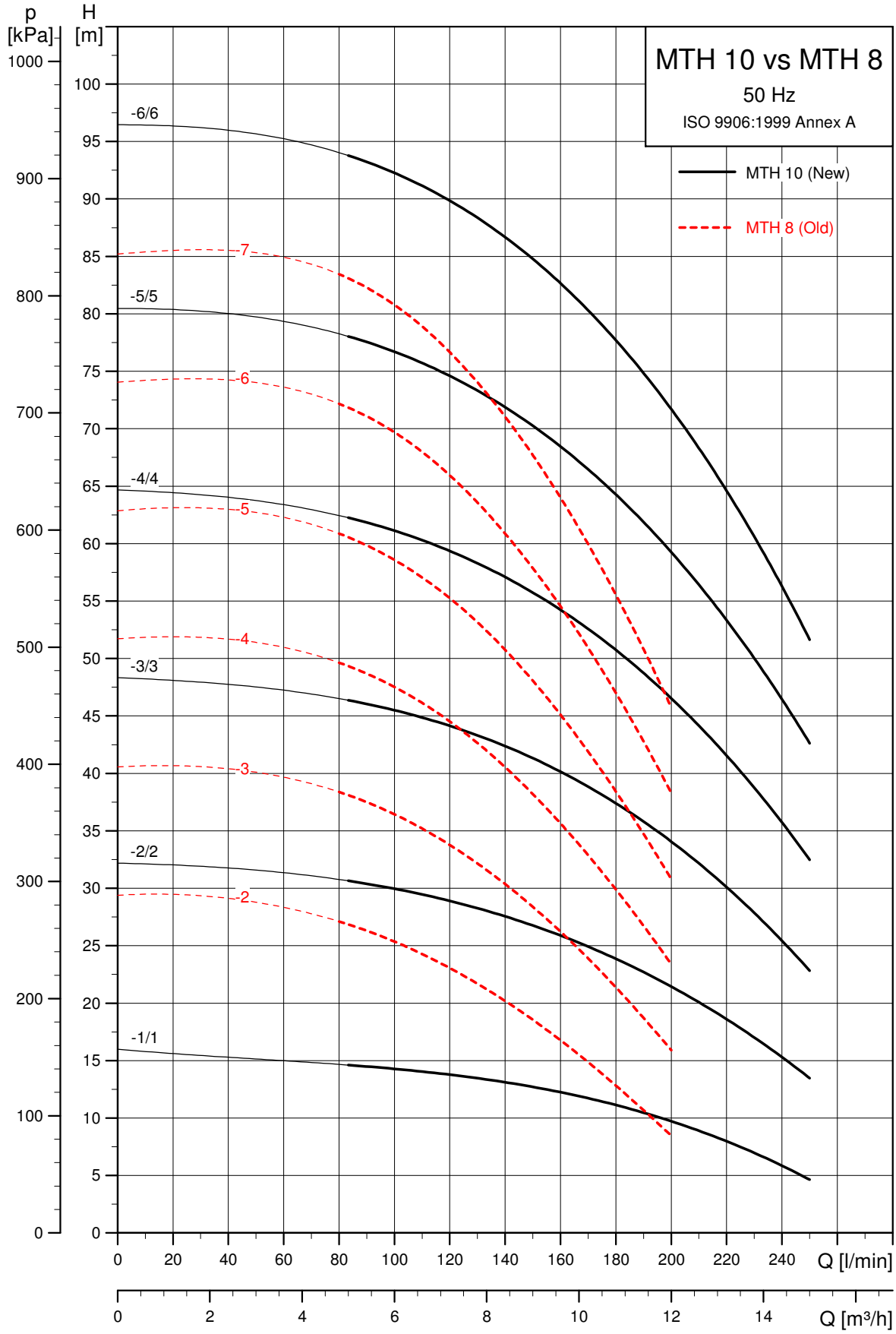

TM06 8923 3217

Replacement lists

Hydraulic performance

The replacement list below is based on the comparison of hydraulic performance.

Hydraulic performance and pump dimension "B"

Pump to be replaced		Replacement pumps		
MTH 8		**MTH 10**		
Pump type	**P2 [kW]**	**Choice**	**Pump type**	**P2 [kW]**
MTH 8-20/2	1.1	1	MTH 10-2/2	1.1
		2	MTH 10-1/1	1.1
MTH 8-30/3	1.5	1	MTH 10-2/2	1.1
		2	MTH 10-3/3	2.2
MTH 8-40/4	2.2	1	MTH 10-3/3	2.2
		2	MTH 10-4/4	3
MTH 8-50/5	2.2	1	MTH 10-4/4	3
		2	MTH 10-3/3	2.2
MTH 8-60/6	3	1	MTH 10-4/4	3
		2	MTH 10-5/5	3
MTH 8-70/7	3	1	MTH 10-5/5	3
		2	MTH 10-6/6	4

The replacement list below is based on the comparison of both hydraulic performance and pump dimension "B", which is shown in the technical data. See section *2. Performance curves and technical data*.

Pump to be replaced			Replacement pumps			
MTH 8			**MTH 10**			
Pump type	**P2 [kW]**	**B [mm]**	**Choice**	**Pump type**	**P2 [kW]**	**B [mm]**
MTH 8-20/2	1.1	60	1	MTH 10-2/2	1.1	135*
			2	MTH 10-1/1	1.1	105*
MTH 8-30/2	1.1	90	1	MTH 10-2/2	1.1	135*
			2	MTH 10-1/1	1.1	105*
MTH 8-40/2	1.1	120	1	MTH 10-2/2	1.1	135*
			2	MTH 10-1/1	1.1	105
MTH 8-50/2	1.1	150	1	MTH 10-2/2	1.1	135
			2	MTH 10-2/1	1.1	135
MTH 8-60/2	1.1	180	1	MTH 10-3/2	1.1	165
			2	MTH 10-3/1	1.1	165
MTH 8-70/2	1.1	210	1	MTH 10-4/2	1.1	195
			2	MTH 10-4/1	1.1	195
MTH 8-30/3	1.5	90	1	MTH 10-2/2	1.1	135*
			2	MTH 10-3/3	2.2	165*
MTH 8-40/3	1.5	120	1	MTH 10-2/2	1.1	135*
			2	MTH 10-3/3	2.2	165*
MTH 8-50/3	1.5	150	1	MTH 10-2/2	1.1	135
			2	MTH 10-3/3	2.2	165
MTH 8-60/3	1.5	180	1	MTH 10-3/2	1.1	165
			2	MTH 10-3/3	2.2	165
MTH 8-70/3	1.5	210	1	MTH 10-4/2	1.1	195
			2	MTH 10-4/3	2.2	195
MTH 8-40/4	2.2	120	1	MTH 10-3/3	2.2	165*
			2	MTH 10-4/4	3	195*
MTH 8-50/4	2.2	150	1	MTH 10-3/3	2.2	165*
			2	MTH 10-4/4	3	195*
MTH 8-60/4	2.2	180	1	MTH 10-3/3	2.2	165
			2	MTH 10-4/4	3	195*
MTH 8-70/4	2.2	210	1	MTH 10-4/3	2.2	195
			2	MTH 10-4/4	3	195
MTH 8-50/5	2.2	150	1	MTH 10-4/4	3	195*
			2	MTH 10-3/3	2.2	165*
MTH 8-60/5	2.2	180	1	MTH 10-4/4	3	195*
			2	MTH 10-3/3	2.2	165
MTH 8-70/5	2.2	210	1	MTH 10-4/4	3	195
			2	MTH 10-4/3	2.2	195
MTH 8-60/6	3	180	1	MTH 10-4/4	3	195*
			2	MTH 10-5/5	3	225*
MTH 8-70/6	3	210	1	MTH 10-4/4	3	195
			2	MTH 10-5/5	3	225*
MTH 8-70/7	3	210	1	MTH 10-5/5	3	225*
			2	MTH 10-6/6	4	255*

* The length (B) of the replacement pump is larger than that of the pump to be replaced.

MTH 10 to replace MTH 12, 50 Hz

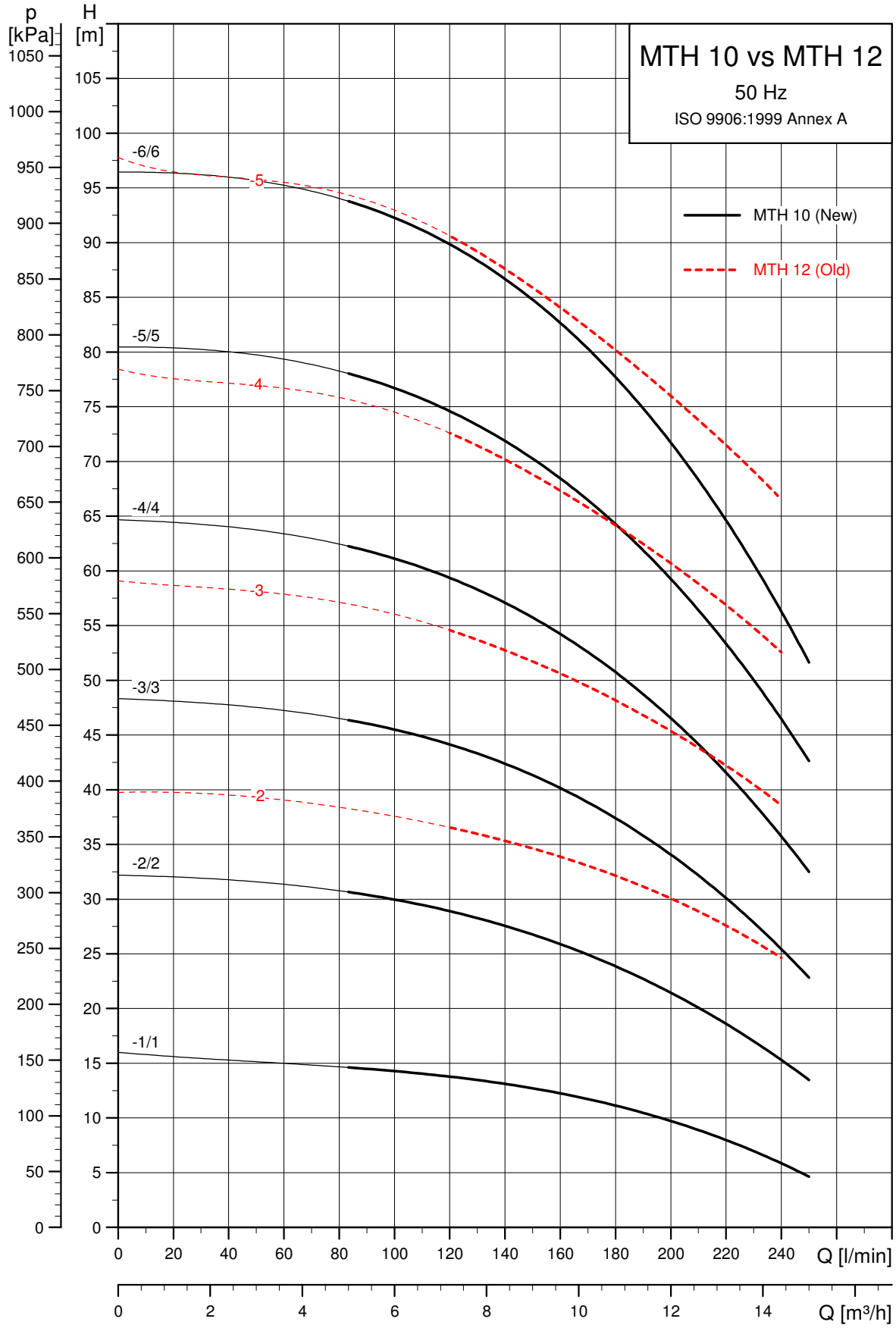

TM06 8925 3217

Replacement lists

Hydraulic performance

The replacement list below is based on the comparison of hydraulic performance.

Pump to be replaced		Replacement pumps		
MTH 12		**MTH 10**		
Pump type	**P2 [kW]**	**Choice**	**Pump type**	**P2 [kW]**
MTH 12-20/2	2.2	1	MTH 10-2/2	1.1
		2	MTH 10-1/1	1.1
MTH 12-30/3	3	1	MTH 10-2/2	1.1
		2	MTH 10-3/3	2.2
MTH 12-40/4	4	1	MTH 10-3/3	2.2
		2	MTH 10-4/4	3
MTH 12-50/5	5.5	1	MTH 10-4/4	3
		2	MTH 10-3/3	2.2

Hydraulic performance and pump dimension "B"

The replacement list below is based on the comparison of both hydraulic performance and pump dimension "B", which is shown in the technical data. See section *2. Performance curves and technical data*.

Pump to be replaced			Replacement pumps			
MTH 12			**MTH 10**			
Pump type	**P2 [kW]**	**B [mm]**	**Choice**	**Pump type**	**P2 [kW]**	**B [mm]**
MTH 12-20/2	2.2	60	1	MTH 10-2/2	1.1	135*
			2	MTH 10-1/1	1.1	105*
MTH 12-30/2	2.2	90	1	MTH 10-2/2	1.1	135*
			2	MTH 10-1/1	1.1	105*
MTH 12-40/2	2.2	120	1	MTH 10-2/2	1.1	135*
			2	MTH 10-1/1	1.1	105
MTH 12-50/2	2.2	150	1	MTH 10-2/2	1.1	135
			2	MTH 10-2/1	1.1	135
MTH 12-60/2	2.2	180	1	MTH 10-3/2	1.1	165
			2	MTH 10-3/1	1.1	165
MTH 12-70/2	2.2	210	1	MTH 10-4/2	1.1	195
			2	MTH 10-4/1	1.1	195
MTH 12-30/3	3	90	1	MTH 10-2/2	1.1	135*
			2	MTH 10-3/3	2.2	165*
MTH 12-40/3	3	120	1	MTH 10-2/2	1.1	135*
			2	MTH 10-3/3	2.2	165*
MTH 12-50/3	3	150	1	MTH 10-2/2	1.1	135
			2	MTH 10-3/3	2.2	165*
MTH 12-60/3	3	180	1	MTH 10-3/2	1.1	165
			2	MTH 10-3/3	2.2	165
MTH 12-70/3	3	210	1	MTH 10-4/2	1.1	195
			2	MTH 10-4/3	2.2	195
MTH 12-40/4	4	120	1	MTH 10-3/3	2.2	165*
			2	MTH 10-4/4	3	195*
MTH 12-50/4	4	150	1	MTH 10-3/3	2.2	165*
			2	MTH 10-4/4	3	195*
MTH 12-60/4	4	180	1	MTH 10-3/3	2.2	165
			2	MTH 10-4/4	3	195*
MTH 12-70/4	4	210	1	MTH 10-4/3	2.2	195
			2	MTH 10-4/4	3	195
MTH 12-50/5	5.5	150	1	MTH 10-4/4	3	195*
			2	MTH 10-3/3	2.2	165*
MTH 12-60/5	5.5	180	1	MTH 10-4/4	3	195*
			2	MTH 10-3/3	2.2	165
MTH 12-70/5	5.5	210	1	MTH 10-4/4	3	195
			2	MTH 10-4/3	2.2	195

* The length (B) of the replacement pump is larger than that of the pump to be replaced.

MTH 15 to replace MTH 16, 50 Hz

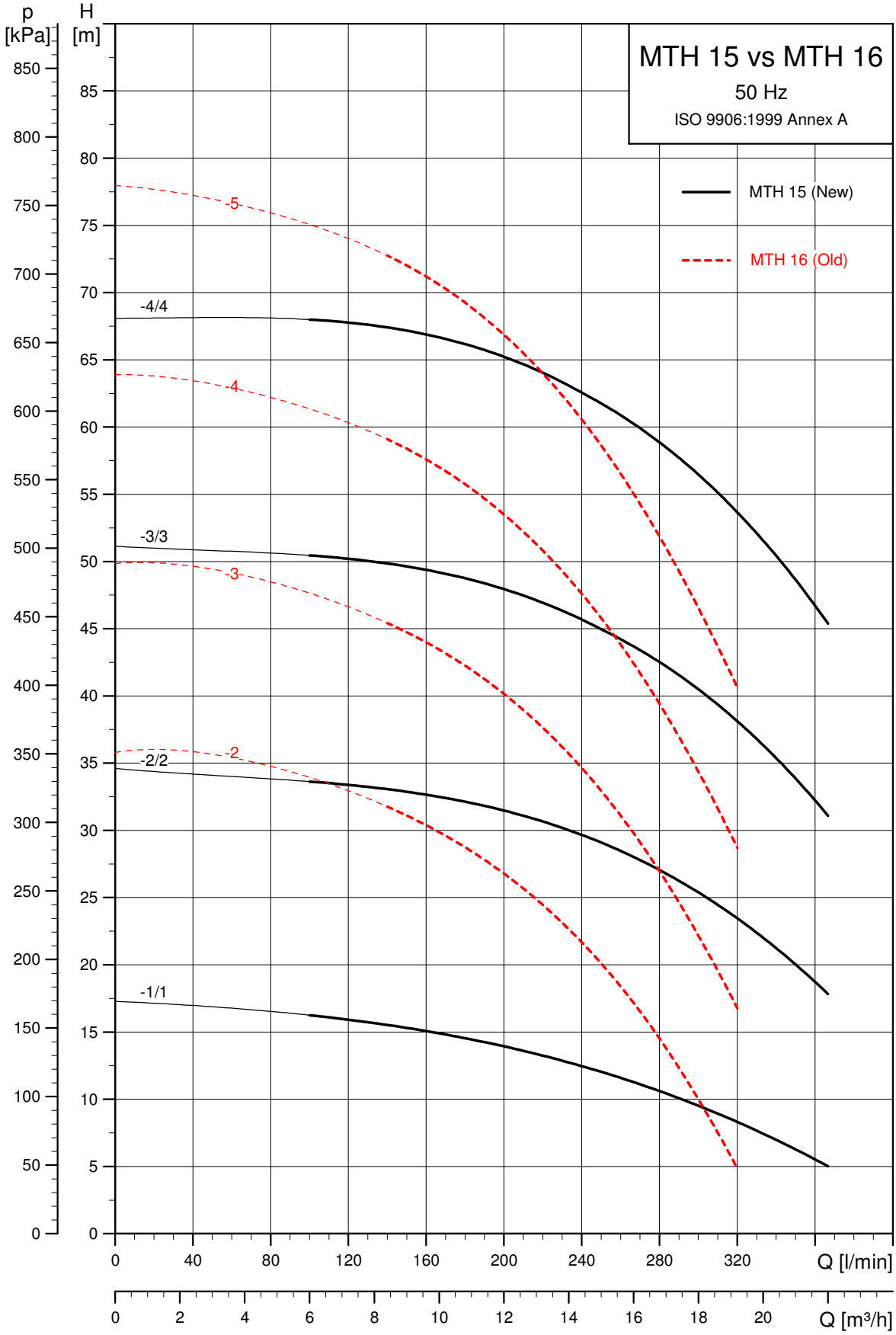

Replacement lists

Hydraulic performance

The replacement list below is based on the comparison of hydraulic performance.

Pump to be replaced		Replacement pumps		
MTH 16		**MTH 15**		
Pump type	**P2 [kW]**	**Choice**	**Pump type**	**P2 [kW]**
MTH 16-20/2	2.2	1	MTH 15-2/2	2.2
		2	MTH 15-1/1	1.1
MTH 16-30/3	3	1	MTH 15-3/3	3
		2	MTH 15-2/2	2.2
MTH 16-40/4	4	1	MTH 15-3/3	3
		2	MTH 15-4/4	4
MTH 16-50/5	5.5	1	MTH 15-4/4	4

Hydraulic performance and pump dimension "B"

The replacement list below is based on the comparison of both hydraulic performance and pump dimension "B", which is shown in the technical data. See section *2. Performance curves and technical data*.

Pump to be replaced			Replacement pumps			
MTH 16			**MTH 15**			
Pump type	**P2 [kW]**	**B [mm]**	**Choice**	**Pump type**	**P2 [kW]**	**B [mm]**
MTH 16-20/2	2.2	75	1	MTH 15-2/2	2.2	135*
			2	MTH 15-1/1	1.1	105*
MTH 16-30/2	2.2	120	1	MTH 15-2/2	2.2	135*
			2	MTH 15-1/1	1.1	105
MTH 16-40/2	2.2	165	1	MTH 15-3/2	2.2	165
			2	MTH 15-3/1	1.1	165
MTH 16-50/2	2.2	210	1	MTH 15-4/2	2.2	195
			2	MTH 15-4/1	1.1	195
MTH 16-60/2	2.2	255	1	MTH 15-6/2	2.2	255
			2	MTH 15-6/1	1.1	255
MTH 16-30/3	3	120	1	MTH 15-3/3	3	165*
			2	MTH 15-2/2	2.2	135*
MTH 16-40/3	3	165	1	MTH 15-3/3	3	165
			2	MTH 15-3/2	2.2	165
MTH 16-50/3	3	210	1	MTH 15-4/3	3	195
			2	MTH 15-4/2	2.2	195
MTH 16-60/3	3	255	1	MTH 15-6/3	3	255
			2	MTH 15-6/2	2.2	255
MTH 16-40/4	4	165	1	MTH 15-3/3	3	165
			2	MTH 15-4/4	4	195*
MTH 16-50/4	4	210	1	MTH 15-4/3	3	195
			2	MTH 15-4/4	4	195
MTH 16-60/4	4	255	1	MTH 15-6/3	3	255
			2	MTH 15-6/4	4	255
MTH 16-50/5	5.5	210	1	MTH 15-4/4	4	195

* The length (B) of the replacement pump is larger than that of the pump to be replaced.

MTH 10 to replace MTH 8, 60 Hz

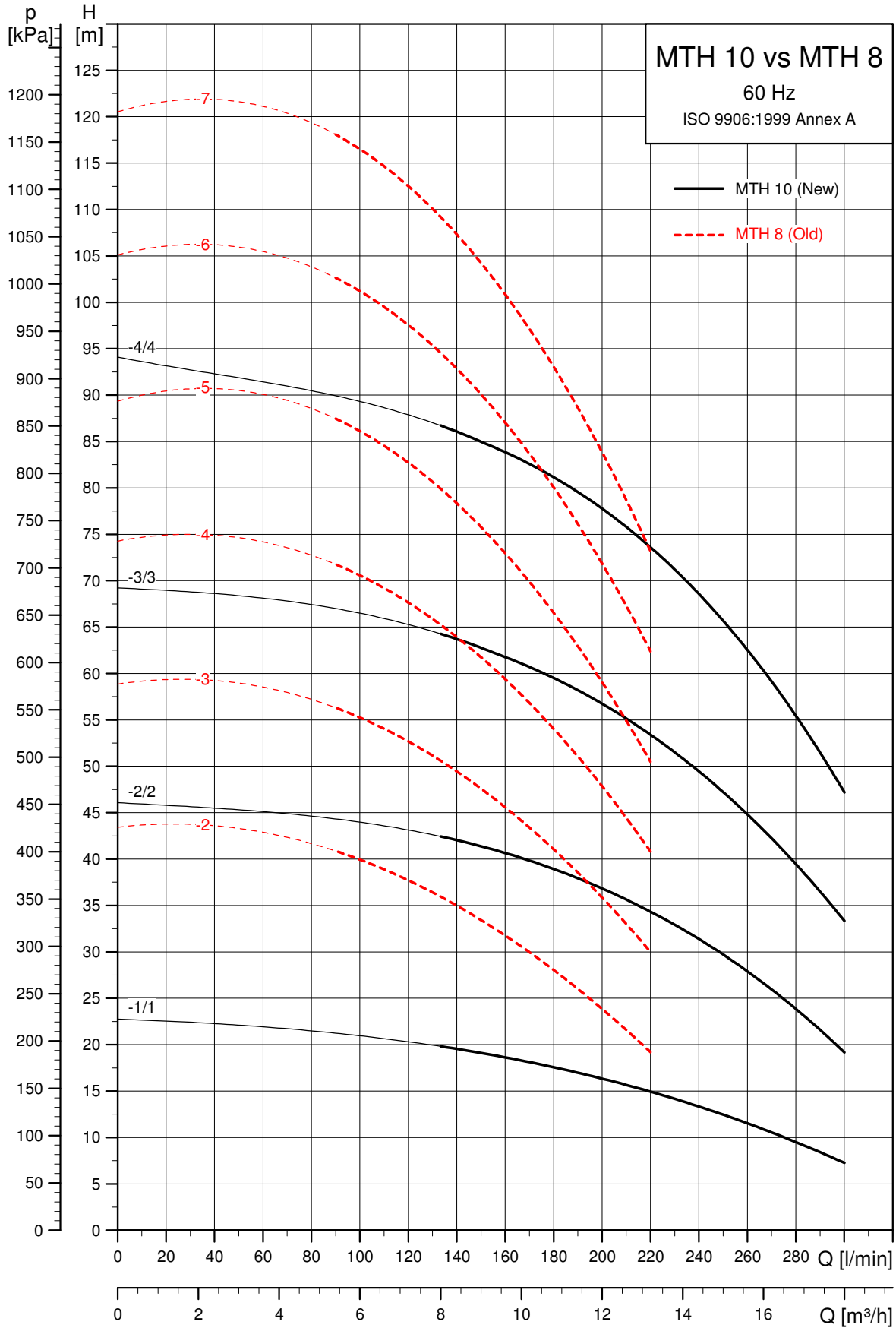

Replacement lists

Hydraulic performance

The replacement list below is based on the comparison of hydraulic performance.

Pump to be replaced		Replacement pumps		
MTH 8		**MTH 10/MTR 8**		
Pump type	**P2 [kW]**	**Choice**	**Pump type**	**P2 [kW]**
MTH 8-20/2	1.5	1	MTH 10-2/2	2.2
		2	MTH 10-1/1	1.1
MTH 8-30/3	2.2	1	MTH 10-2/2	2.2
		2	MTH 10-3/3	3
MTH 8-40/4	3	1	MTH 10-3/3	3
MTH 8-50/5	3	1	MTH 10-4/4	4
		2	MTH 10-3/3	3
MTH 8-60/6	4	1	MTH 10-4/4	4
MTH 8-70/7	5.5	1	MTR 8-9/9	5.5

Hydraulic performance and pump dimension "B"

The replacement list below is based on the comparison of both hydraulic performance and pump dimension "B", which is shown in the technical data. See section *2. Performance curves and technical data*.

Pump to be replaced			Replacement pumps			
MTH 8			**MTH 10/MTR 8**			
Pump type	**P2 [kW]**	**B [mm]**	**Choice**	**Pump type**	**P2 [kW]**	**B [mm]**
MTH 8-20/2	1.5	60	1	MTH 10-2/2	2.2	135*
			2	MTH 10-1/1	1.1	105*
MTH 8-30/2	1.5	90	1	MTH 10-2/2	2.2	135*
			2	MTH 10-1/1	1.1	105*
MTH 8-40/2	1.5	120	1	MTH 10-2/2	2.2	135*
			2	MTH 10-1/1	1.1	105
MTH 8-50/2	1.5	150	1	MTH 10-2/2	2.2	135
			2	MTH 10-2/1	1.1	135
MTH 8-60/2	1.5	180	1	MTH 10-3/2	2.2	165
			2	MTH 10-3/1	1.1	165
MTH 8-70/2	1.5	210	1	MTH 10-4/2	2.2	195
			2	MTH 10-4/1	1.1	195
MTH 8-30/3	2.2	90	1	MTH 10-2/2	2.2	135*
			2	MTH 10-3/3	3	165*
MTH 8-40/3	2.2	120	1	MTH 10-2/2	2.2	135*
			2	MTH 10-3/3	3	165*
MTH 8-50/3	2.2	150	1	MTH 10-2/2	2.2	135
			2	MTH 10-3/3	3	165*
MTH 8-60/3	2.2	180	1	MTH 10-3/2	2.2	165
			2	MTH 10-3/3	3	165
MTH 8-70/3	2.2	210	1	MTH 10-4/2	2.2	195
			2	MTH 10-4/3	3	195
MTH 8-40/4	3	120	1	MTH 10-3/3	3	165*
MTH 8-50/4	3	150	1	MTH 10-3/3	3	165*
MTH 8-60/4	3	180	1	MTH 10-3/3	3	165
			2	MTH 10-4/3	3	195*
MTH 8-70/4	3	210	1	MTH 10-4/3	3	195
			2	MTH 10-5/3	3	225*
MTH 8-50/5	3	150	1	MTH 10-4/4	4	195*
			2	MTH 10-3/3	3	165*
MTH 8-60/5	3	180	1	MTH 10-4/4	4	195*
			2	MTH 10-3/3	3	165
MTH 8-70/5	3	210	1	MTH 10-4/4	4	195
			2	MTH 10-4/3	3	195
MTH 8-60/6	4	180	1	MTH 10-4/4	4	195*
MTH 8-70/6	4	210	1	MTH 10-4/4	4	195
			2	MTH 10-5/4	4	225*
MTH 8-70/7	5.5	210	1	MTR 8-9/9**	5.5	412*

* The length (B) of the replacement pump is larger than that of the pump to be replaced.
** Different tank hole dimensions.

MTH 10 to replace MTH 12, 60 Hz

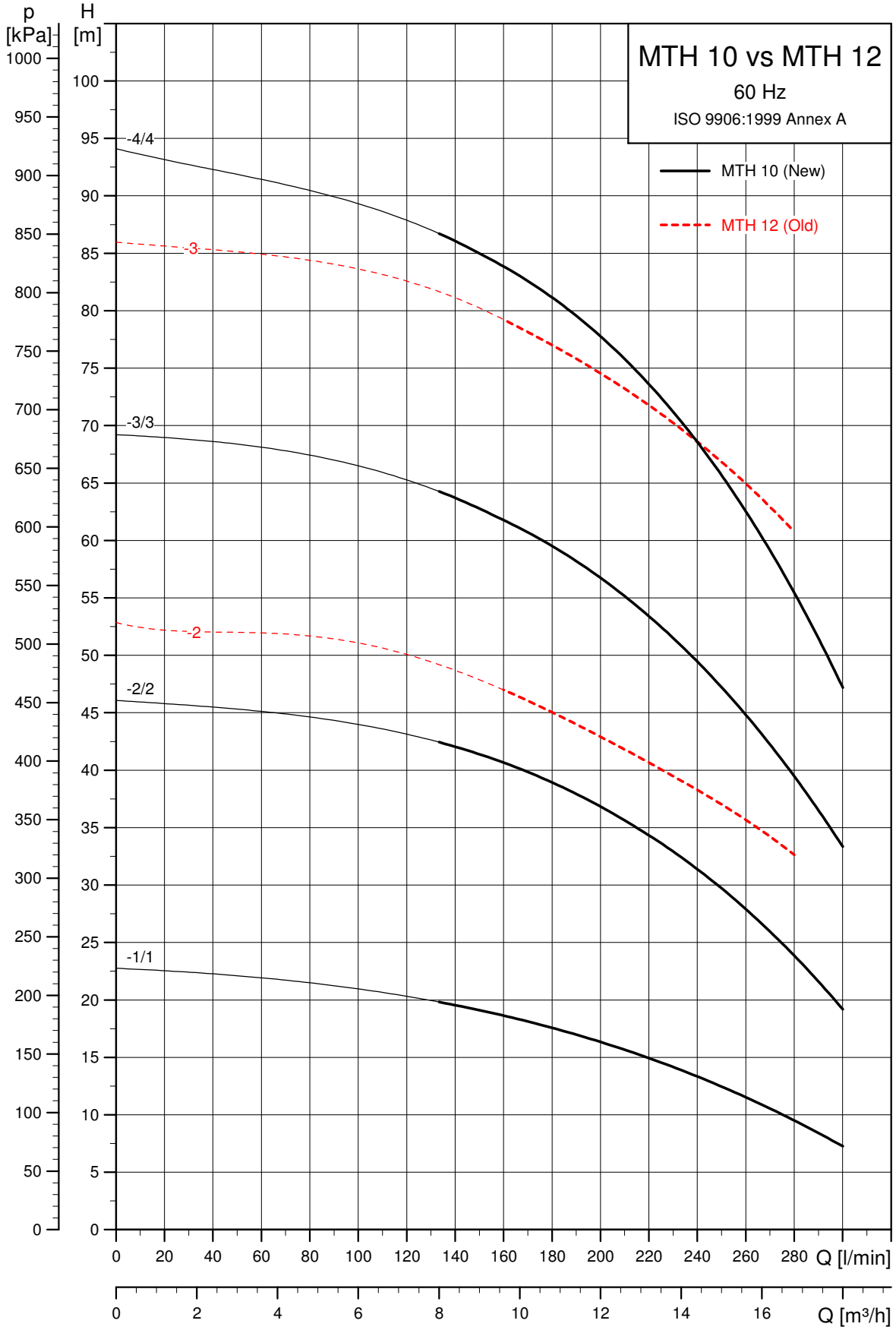

TM06 8926 3317

Replacement lists

Hydraulic performance

The replacement list below is based on the comparison of hydraulic performance.

Pump to be replaced		Replacement pumps		
MTH 12		**MTH 10**		
Pump type	**P2 [kW]**	**Choice**	**Pump type**	**P2 [kW]**
MTH 12-20/2	3	1	MTH 10-2/2	2.2
		2	MTH 10-1/1	1.1
MTH 12-30/3	5.5	1	MTH 10-2/2	2.2
		2	MTH 10-3/3	3

Hydraulic performance and pump dimension "B"

The replacement list below is based on the comparison of both hydraulic performance and pump dimension "B", which is shown in the technical data. See section *2. Performance curves and technical data*.

Pump to be replaced			Replacement pumps			
MTH 12			**MTH 10**			
Pump type	**P2 [kW]**	**B [mm]**	**Choice**	**Pump type**	**P2 [kW]**	**B [mm]**
MTH 12-20/2	3	60	1	MTH 10-2/2	2.2	135*
			2	MTH 10-1/1	1.1	105*
MTH 12-30/2	3	90	1	MTH 10-2/2	2.2	135*
			2	MTH 10-1/1	1.1	105*
MTH 12-40/2	3	120	1	MTH 10-2/2	2.2	135*
			2	MTH 10-1/1	1.1	105
MTH 12-50/2	3	150	1	MTH 10-2/2	2.2	135
			2	MTH 10-2/1	1.1	135
MTH 12-60/2	3	180	1	MTH 10-3/2	2.2	165
			2	MTH 10-3/1	1.1	165
MTH 12-70/2	3	210	1	MTH 10-4/2	2.2	195
			2	MTH 10-4/1	1.1	195
MTH 12-30/3	5.5	90	1	MTH 10-2/2	2.2	135*
			2	MTH 10-3/3	3	165*
MTH 12-40/3	5.5	120	1	MTH 10-2/2	2.2	135*
			2	MTH 10-3/3	3	165*
MTH 12-50/3	5.5	150	1	MTH 10-2/2	2.2	135
			2	MTH 10-3/3	3	165*
MTH 12-60/3	5.5	180	1	MTH 10-3/2	2.2	165
			2	MTH 10-3/3	3	165
MTH 12-70/3	5.5	210	1	MTH 10-4/2	2.2	195
			2	MTH 10-4/3	3	195

* The length (B) of the replacement pump is larger than that of the pump to be replaced.

MTH 15 to replace MTH 16, 60 Hz

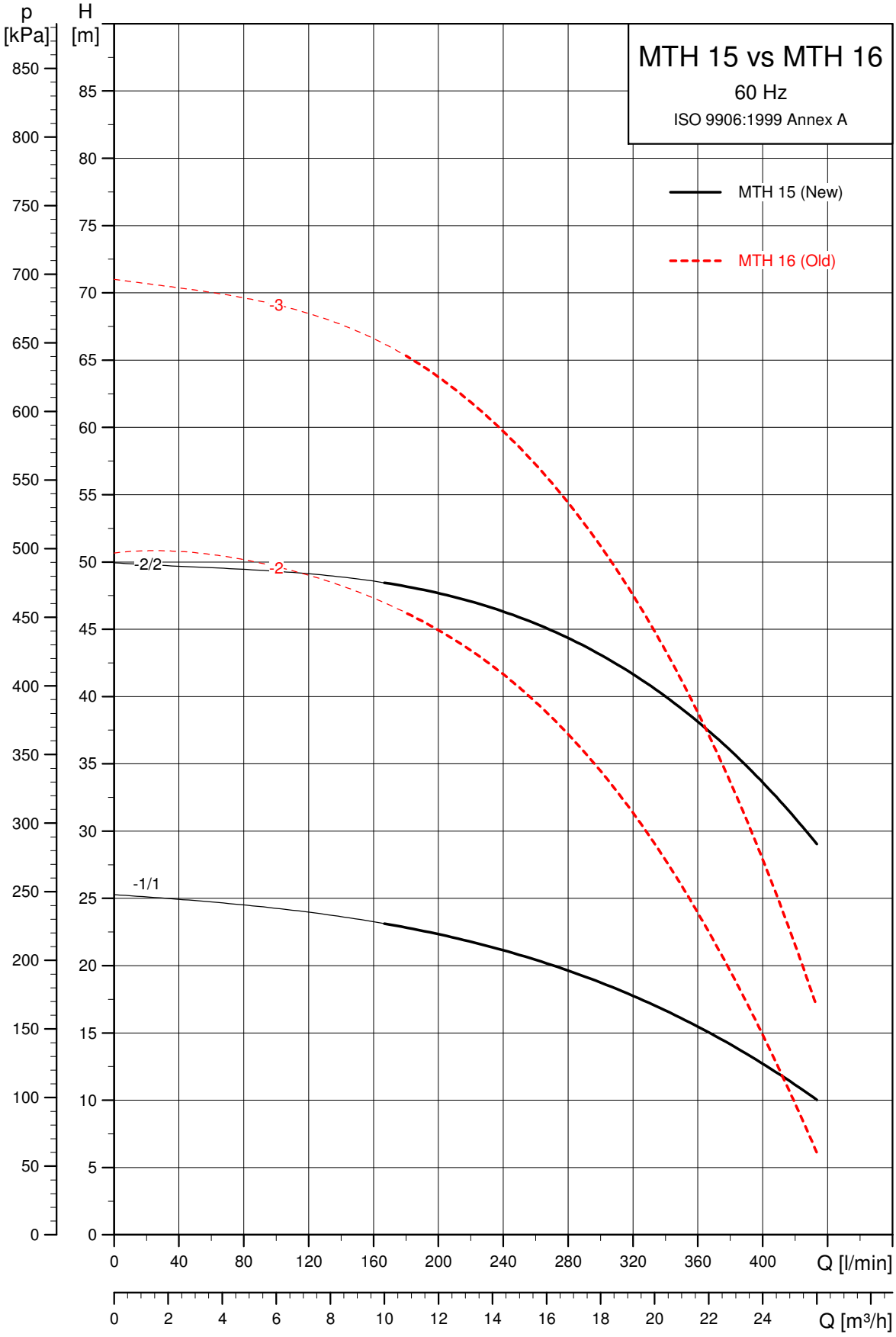

TM06 8928 3317

Replacement lists

Hydraulic performance

The replacement list below is based on the comparison of hydraulic performance.

Pump to be replaced		Replacement pumps		
MTH 16		**MTH 15**		
Pump type	**P2 [kW]**	**Choice**	**Pump type**	**P2 [kW]**
MTH 16-20/2	3	1	MTH 15-2/2	4
		2	MTH 15-1/1	2.2
MTH 16-30/3	5.5	1	MTH 15-2/2	4
		2	MTH 10-4/4	4

Hydraulic performance and pump dimension "B"

The replacement list below is based on the comparison of both hydraulic performance and pump dimension "B", which is shown in the technical data. See section *2. Performance curves and technical data*.

Pump to be replaced			Replacement pumps			
MTH 16			**MTH 15**			
Pump type	**P2 [kW]**	**B [mm]**	**Choice**	**Pump type**	**P2 [kW]**	**B [mm]**
MTH 16-20/2	3	75	1	MTH 15-2/2	4	135*
			2	MTH 15-1/1	2.2	105*
MTH 16-30/2	3	120	1	MTH 15-2/2	4	135*
			2	MTH 15-1/1	2.2	105
MTH 16-40/2	3	165	1	MTH 15-3/2	4	165
			2	MTH 15-3/1	2.2	165
MTH 16-50/2	3	210	1	MTH 15-4/2	4	195
			2	MTH 15-4/1	2.2	195
MTH 16-60/2	3	255	1	MTH 15-6/2	4	255
			2	MTH 15-6/1	2.2	255
MTH 16-30/3	5.5	120	1	MTH 15-2/2	4	135*
			2	MTH 10-4/4	4	195*
MTH 16-40/3	5.5	165	1	MTH 15-3/2	4	165
			2	MTH 10-4/4	4	195*
MTH 16-50/3	5.5	210	1	MTH 15-4/2	4	195
			2	MTH 10-4/4	4	195
MTH 16-60/3	5.5	255	1	MTH 15-5/2	4	255
			2	MTH 10-5/4	4	255

* The length (B) of the replacement pump is larger than that of the pump to be replaced.

7. Grundfos Product Center

Online search and sizing tool to help you make the right choice.

http://product-selection.grundfos.com

SIZING enables you to size a pump based on entered data and selection choices.

REPLACEMENT enables you to find a replacement product.
Search results will include information on

- the lowest purchase price
- the lowest energy consumption
- the lowest total life cycle cost.

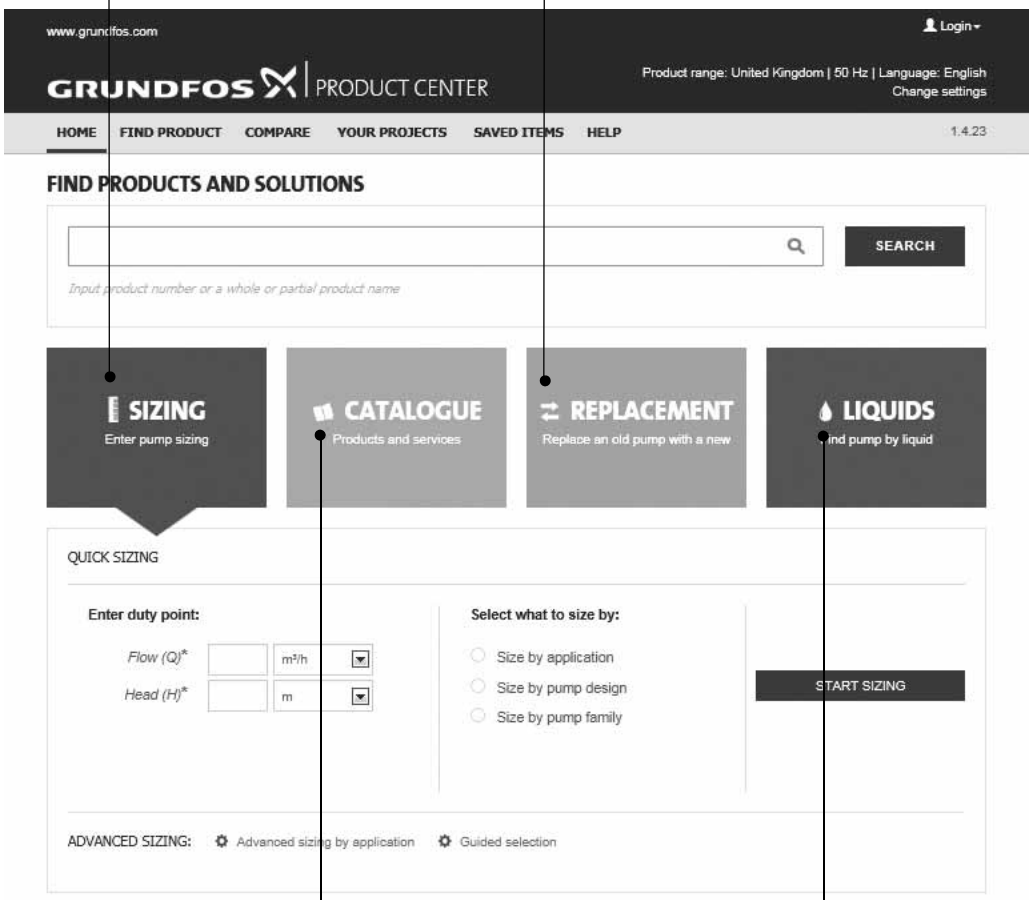

CATALOGUE gives you access to the Grundfos product catalogue.

LIQUIDS enables you to find pumps designed for aggressive, flammable or other special liquids.

All the information you need in one place

Performance curves, technical specifications, pictures, dimensional drawings, motor curves, wiring diagrams, spare parts, service kits, 3D drawings, documents, system parts. The Product Center displays any recent and saved items - including complete projects - right on the main page.

Downloads

On the product pages, you can download installation and operating instructions, data booklets, service instructions, etc. in PDF format.

be think innovate

© Copyright Grundfos Holding A/S

The name Grundfos, the Grundfos logo, and **be think innovate** are registered trademarks owned by Grundfos Holding A/S or Grundfos A/S, Denmark. All rights reserved worldwide.

99298287 0818

ECM: 1241629

GRUNDFOS A/S
DK-8850 Bjerringbro . Denmark
Telephone: +45 87 50 14 00
www.grundfos.com

GRUNDFOS