Pulsation dampers and Manual vacuum pump kit

Damper design D, DB, DBG, SD, CSD

Installation and operating instructions

Damper / Vacuum pump
Installation and operating instructions
(all available languages)
http://net.grundfos.com/qr/i/99207465

be
think
innovate

GRUNDFOS

Pulsation dampers and Manual vacuum pump kit

English (GB)
Installation and operating instructions 4

Čeština (CZ)
Montážní a provozní návod 21

Deutsch (DE)
Montage- und Betriebsanleitung 38

Dansk (DK)
Monterings- og driftsinstruktion 56

Español (ES)
Instrucciones de instalación y funcionamiento 73

Français (FR)
Notice d'installation et de fonctionnement 91

Italiano (IT)
Istruzioni di installazione e funzionamento 108

Nederlands (NL)
Installatie- en bedieningsinstructies 125

Polski (PL)
Instrukcja montażu i eksploatacji 142

Português (PT)
Instruções de instalação e funcionamento 160

Română (RO)
Instrucţiuni de instalare şi utilizare 178

Русский (RU)
Паспорт, Руководство по монтажу и эксплуатации. 195

Svenska (SE)
Monterings- och driftsinstruktion. 214

Türkçe (TR)
Montaj ve kullanım kılavuzu 231

中文 (CN)
安装和使用说明书 249

日本語 (JP)
取扱説明書. 265

한국어 (KO)
설치 및 작동 지침. 281

Appendix A. 297

Original installation and operating instructions

Table of contents

1. General information 4
1.1 Target group 4
1.2 Hazard statements 4
1.3 Notes 4
1.4 Safe operation 5

2. Installing the product 5
2.1 Safety instructions 5
2.2 Location 5
2.3 Installation requirements and notes 5
2.4 Installation example of pulsation dampers CSD and DBG 6
2.5 Installation example of pulsation damper D 6

3. Commissioning the product 6
3.1 Safety instructions 6
3.2 Checks before startup 6
3.3 Commissioning pulsation dampers SD and CSD 7
3.4 Commissioning pulsation dampers D 7
3.5 Commissioning pulsation dampers DB and DBG 8

4. Handling and storing the product 9
4.1 Handling the product 9
4.2 Storing the product 9

5. Product introduction 9
5.1 Intended use 9
5.2 Identification 10
5.3 Product description 11

6. Operating the product 13
6.1 Using pulsation damper CSD for pump calibration or flow measurement 13

7. Maintaining the product 14
7.1 Safety instructions 14
7.2 Refilling pulsation dampers SD and CSD 14
7.3 Refilling pulsation damper D with air 14
7.4 Checking and adjusting the preload pressure of pulsation dampers DB and DBG 14
7.5 Replacing the separating diaphragm of pulsation dampers DB and DBG 14

8. Spare Parts 15

9. Fault finding 15
9.1 Pulsation damping effect too small or diminishing 15
9.2 After start-up, the pulsation damper does not produce the desired effect 15

10. Technical data 15
10.1 Sizing of pulsation dampers 15
10.2 Permissible media temperature 15
10.3 Storage and ambient temperatures 15
10.4 Suction-side pulsation dampers SD 15
10.5 Suction-side pulsation dampers CSD 16
10.6 Discharge-side pulsation dampers D 16
10.7 Discharge-side pulsation dampers DB and DBG 17

11. Accessories 18
11.1 Manual vacuum pump kit for pulsation dampers CSD . . . 18
11.2 Filling devices for pulsation dampers DB and DBG 19
11.3 Tyre-valve adapter for pulsation dampers DB and DBG . . 19
11.4 Pressure gauge for pulsation dampers D 19
11.5 Pressure gauge for pulsation dampers DB 20

12. Disposing of the product 20

1. General information

Read this document before you install the product. Installation and operation must comply with local regulations and accepted codes of good practice.

1.1 Target group

This document is intended for the operating company and the users. It contains general instructions that must be observed before installation and during operation and maintenance of the product. The responsible staff must read these instructions prior to any work on the product.

1.1.1 Qualification and training

The persons responsible for the tasks described in this document must be appropriately qualified.

1.1.2 Obligations of the operating company

- Observe the local safety regulations.
- Keep the installation and operating instructions available at the installation location at all times.
- Coordinate the preparation of the installation location observing section *Technical data*.
- Ensure that the users are trained for their tasks.
- Provide the stipulated safety equipment and personal protective equipment.
- Arrange regular maintenance.

1.1.3 Obligations of the user

- Observe the recognised health and safety regulations as well as the local accident prevention regulations.
- Wear protective equipment in accordance with local health and safety regulations when working on the product and handling chemicals.
- Read and understand this document.

1.2 Hazard statements

The symbols and hazard statements below may appear in Grundfos installation and operating instructions, safety instructions and service instructions.

DANGER
Indicates a hazardous situation which, if not avoided, will result in death or serious personal injury.

WARNING
Indicates a hazardous situation which, if not avoided, could result in death or serious personal injury.

CAUTION
Indicates a hazardous situation which, if not avoided, could result in minor or moderate personal injury.

The hazard statements are structured in the following way:

SIGNAL WORD
Description of the hazard
Consequence of ignoring the warning
- Action to avoid the hazard.

1.3 Notes

The symbols and notes below may appear in Grundfos installation and operating instructions, safety instructions and service instructions.

Observe these instructions for explosion-proof products.

A blue or grey circle with a white graphical symbol indicates that an action must be taken.

A red or grey circle with a diagonal bar, possibly with a black graphical symbol, indicates that an action must not be taken or must be stopped.

If these instructions are not observed, it may result in malfunction or damage to the equipment.

Tips and advice that make the work easier.

1.4 Safe operation

When working with chemicals, the accident prevention regulations applicable at the installation site must be applied.

Observe the chemical manufacturer's safety data sheets when handling chemicals.

When working on the product or connections and lines, always wear protective clothing (e.g. safety goggles and gloves). The system must be pressureless.

Only operate the system if all lines are connected correctly.

If safe operation is no longer possible, the product must be taken out of operation and secured against unintentional operation.

This is the case in the following situations:

- If the product is visibly damaged.
- If the product does not seem operational.
- After long periods of storage under unfavourable conditions.

2. Installing the product

2.1 Safety instructions

The product must only be installed by authorised and qualified persons.

Read the manuals of all system components before starting any work on the system.

When working with chemicals, the accident prevention regulations applicable at the installation site must be applied.

Observe the chemical manufacturer's safety data sheets when handling chemicals.

When working on the product or connections and lines, always wear protective clothing (e.g. safety goggles and gloves). The system must be pressureless.

Observe section Handling the product.

Wipe up spilled liquid immediately to avoid slipping hazard.

2.2 Location

- The installation location must be protected from rain, humidity, condensation, direct sunlight and dust.
- The installation location must have sufficient lighting to ensure safe operation.
- Observe the permissible ambient conditions. See section Storage and ambient temperatures.

2.3 Installation requirements and notes

2.3.1 General notes

- Install pulsation dampers always vertically with the dosing line connection at the bottom side to ensure correct operation and to prevent the accumulation of dirt.
- Shorten hoses and pipes at right angles.
- Make sure that there are no loops or kinks in the hoses.
- Keep the inlet line of the dosing pump as short as possible.
- Route the inlet line up towards the inlet valve of the dosing pump.
- Observe the installation instructions in the manual of the dosing pump.
- Heavy pulsation dampers must be fixed separately using the fastening material supplied.
- To avoid flow deflection losses and frictional losses:
  - Make sure that the dosing line is as straight as possible.
  - Use dosing lines with the same nominal diameter as the dosing line connector of the pulsation damper.
- Glued pipe connection for PVC: For correct sealing of glued connections, prepare the surfaces with a proprietary solvent cleaner and use a proprietary PVC glue. Follow the instructions of the pipe manufacturer.
- Welded pipe connection for PP and PVDF: For correct sealing of welded connections, follow the instructions of the pipe manufacturer for the welding process.
- Threaded pipe connection: For threaded connections apply appropriate sealing material to the threads. Follow the instructions of the pipe manufacturer.

2.3.2 Suction-side pulsation dampers SD and CSD

- Pulsation dampers SD and CSD must only be used as suction-side pulsation dampers.
- Install pulsation dampers SD and CSD in the inlet line as close as possible to the inlet valve of the dosing pump.
- Install a drain valve to enable draining of the pulsation damper. See pos. 12, fig. Installation example of pulsation dampers CSD and DBG.
- Install a shut-off valve in front of the pulsation damper. See pos. 11, fig. Installation example of pulsation dampers CSD and DBG.

2.3.3 Discharge-side pulsation dampers D, DB and DBG

- Pulsation dampers D, DB and DBG must only be used as discharge-side pulsation dampers.
- Install pulsation dampers D, DB and DBG in the outlet line as close as possible to the outlet valve of the dosing pump.
- Install a drain valve to enable draining of the pulsation damper. See pos. 13, fig. Installation example of pulsation dampers CSD and DBG. The drain valve is also used to depressurise the discharge line between the dosing pump and the pulsation damper.
- Install one pulsation damper per dosing pump.
- If the system pressure is below 3 bar or fluctuating, install a pressure loading valve PLV after the pulsation damper to optimise its function. See fig. Installation example of pulsation dampers CSD and DBG.
- Pulsation damper DB and DBG: For system pressures above 10 bar, only use nitrogen to preload the pulsation damper.

2.4 Installation example of pulsation dampers CSD and DBG

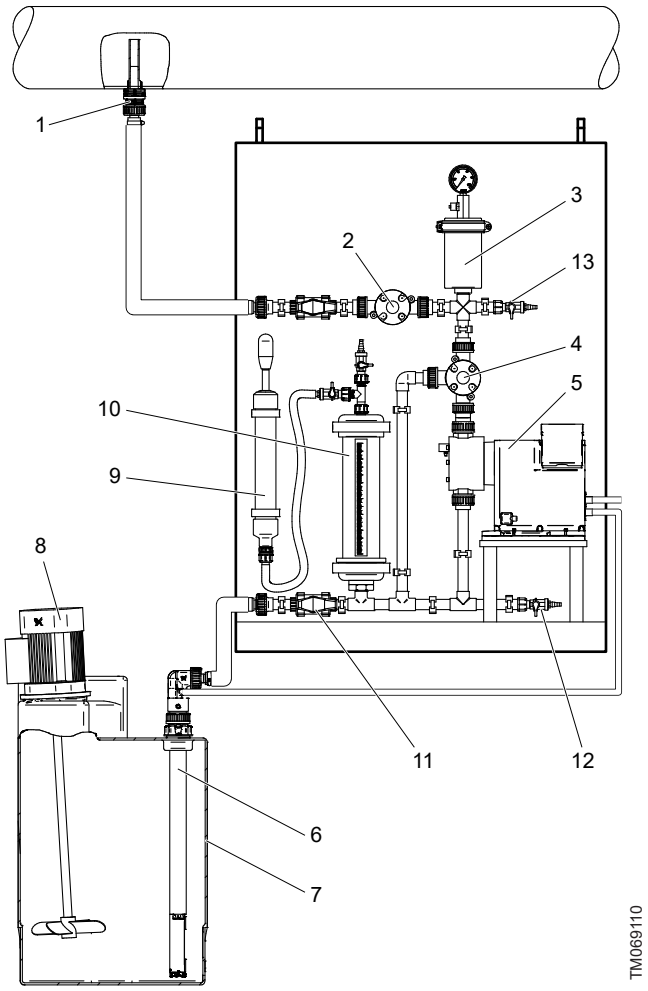

Installation example of pulsation dampers CSD and DBG

Pos.	Description
1	Injection unit
2	Pressure loading valve PLV
3	Pulsation damper DBG
4	Pressure relief valve PRV
5	Dosing pump
6	Rigid suction lance RSL
7	Dosing tank
8	Electric stirrer
9	Manual vacuum pump
10	Pulsation damper CSD
11	Shut-off valve
12	Drain valve
13	Drain valve

2.5 Installation example of pulsation damper D

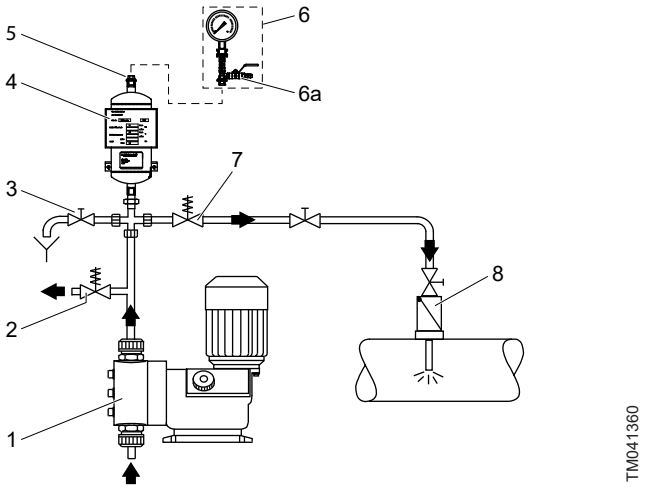

Installation example of pulsation damper D

Pos.	Description
1	Dosing pump
2	Pressure relief valve PRV
3	Drain valve
4	Pulsation damper D
5	Aeration screw
6	Optional pressure gauge assembly
6a	Aeration valve
7	Pressure loading valve PLV
8	Injection unit

3. Commissioning the product

3.1 Safety instructions

The product must only be adjusted and commissioned by authorised and qualified persons.

Read the manuals of all system components before starting any work on the system.

When working with chemicals, the accident prevention regulations applicable at the installation site must be applied.

Observe the chemical manufacturer's safety data sheets when handling chemicals.

When working on the product or connections and lines, always wear protective clothing (e.g. safety goggles and gloves). The system must be pressureless.

Wipe up spilled liquid immediately to avoid slipping hazard.

WARNING
Danger of explosion
Death or serious personal injury
- Do not lead oxygen into pulsation dampers.
- Do not exceed the maximum operating pressure of the pulsation damper.

3.2 Checks before startup

- Check that all components of the dosing system are mounted and connected correctly.
- Check that all components of the dosing system are ready for operation.

3.3 Commissioning pulsation dampers SD and CSD

3.3.1 Commissioning with flooded suction

This commissioning procedure applies to installations where the level of the dosing medium in the tank is above the suction-side pulsation damper.

1. Read section Safety instructions.
2. Perform the checks before startup. See section Checks before startup.

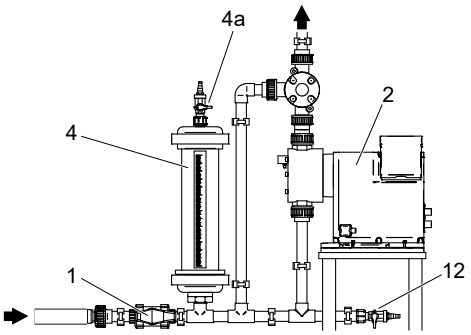

Commissioning with flooded suction

Pos.	Description
1	Shut-off valve
2	Dosing pump
4	Pulsation damper
4a	Aeration valve
12	Drain valve

3. Make sure that the following prerequisites are in place:
   - The dosing pump is off.
   - Shut-off valve (1) is closed.
   - Drain valve (12) is closed.
   - The dosing tank is filled with the correct dosing medium.
4. For pulsation damper SD:
   - Open the aeration screw at the top.
5. For pulsation damper CSD:
   - Open aeration valve (4a).
6. Slowly open valve (1) and close it again when the pulsation damper (4) is filled by 70 % with dosing medium.
7. For pulsation damper SD:
   - Close the aeration screw at the top.
8. For pulsation damper CSD:
   - Close aeration valve (4a).
9. Open shut-off valve (1).
   The suction-side pulsation damper is commissioned now.
10. Deaerate the dosing pump according to the separate manual.
11. When the dosing pump is deaerated, proceed with the commissioning of the discharge-side pulsation damper. See section:
    - *Commissioning pulsation dampers D*
    - *Commissioning pulsation dampers DB and DBG.*

3.3.2 Commissioning without flooded suction

This commissioning procedure applies to installations where the level of the dosing medium in the tank is below the suction-side pulsation damper. The manual vacuum pump kit is required for this kind of commissioning. See section Manual vacuum pump kit for pulsation dampers CSD.

1. Read section Safety instructions.
2. Perform the checks before startup. See section Checks before startup.

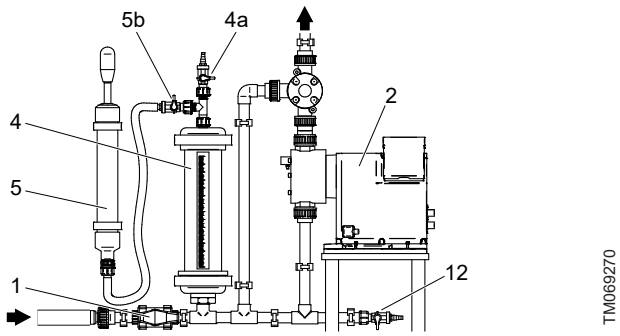

Commissioning without flooded suction

Pos.	Description
1	Shut-off valve
2	Dosing pump
4	Pulsation damper
4a	Aeration valve
5	Manual vacuum pump
5b	Shut-off valve
12	Drain valve

3. Make sure that the following prerequisites are in place:
   - The dosing pump is off.
   - Drain valve (12) is closed.
   - The dosing tank is filled with the correct dosing medium.
4. Open shut-off valve (1).
5. Open shut-off valve (5b).
6. Close aeration valve (4a).
7. Use the manual vacuum pump (5) to fill the pulsation damper (4) by 70 % with dosing medium.
8. Close shut-off valve (5b).
   The suction-side pulsation damper is commissioned now.
9. Deaerate the dosing pump according to the separate manual.
10. When the dosing pump is deaerated, proceed with the commissioning of the discharge-side pulsation damper. See section:
    - Commissioning pulsation dampers D
    - *Recommended pressure settings*.

3.4 Commissioning pulsation dampers D

The pulsation damper D has no separating diaphragm and thus cannot be preloaded. During startup of the empty dosing system, air is trapped inside the pulsation damper and forms the gas cushion. The amount of air in the pulsation damper depends on its size and cannot be adjusted.

1. Read section Safety instructions.
2. Perform the checks before startup. See section Checks before startup.
3. Make sure that the pulsation damper and the discharge line are drained completely. Otherwise see section Refilling pulsation damper D with air.
4. Make sure that aeration screw (5) or aeration valve (6a) is closed. See fig. Installation example of pulsation damper D.
5. Start up the dosing system.

! Observe that the air in pulsation dampers D is dissolved by the dosing medium over time. Regularly check the dampening performance and refill the gas cushion if necessary. See section Refilling pulsation damper D with air.

3.5 Commissioning pulsation dampers DB and DBG

3.5.1 Recommended pressure settings

The recommended preload pressure and the allowed preload gas of the pulsation damper as well as the opening pressure of the PLV depend on the system pressure of the dosing system.

System pressure	Pulsation damper (DB, DBG)		PLV
	Allowed pre-load gas	Preload pressure [bar]	Opening pressure [bar]
< 3 bar constant	air, nitrogen	2.7	3.0
3-10 bar constant*	air, nitrogen	80 % of system pressure	100 % of system pressure
≤10 bar fluctuating	air, nitrogen		
> 10 bar	nitrogen		no PLV

*The installation of a PLV is optional.

To adjust the opening pressure of the PLV, see the separate manual.

3.5.2 Connecting the tyre-valve adapter for air filling (up to 8 bar)

The tyre-valve adapter can be used to preload the pulsation damper with air using a compressed-air device. The adapter can either be connected directly to the gas connector of the pulsation damper or to the gas connector of the filling device.

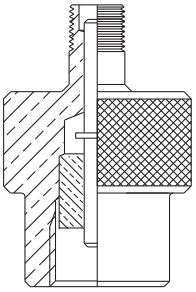

TM069257

Tyre-valve adapter

Connecting the tyre-valve adapter directly to the pulsation damper

1. Read section Safety instructions.
2. Remove the protective cap from gas connector (2). See fig. PVC version of discharge-side pulsation damper DB (left) and DBG (right).
   - Make sure not to lose the O-ring.
3. Screw on the tyre-valve adapter and tighten it manually.

Connecting the tyre-valve adapter to the filling device

1. Read section Safety instructions.
2. Remove the protective cap from gas connector (6). See fig. Filling device.
   - Make sure not to lose the O-ring.
3. Screw on the tyre-valve adapter and tighten it manually.

3.5.3 Connecting the filling device

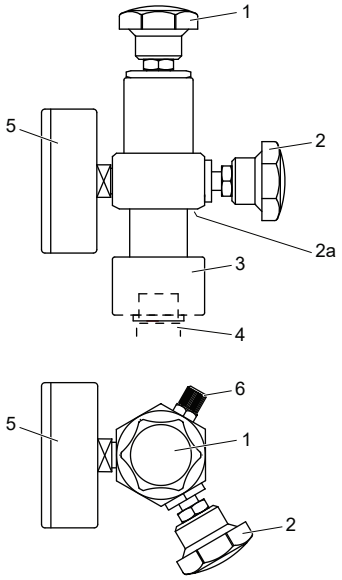

TM069237

Filling device

Pos.	Description
1	Connection handle
2	Gas relief handle
2a	Gas relief opening
3	Union nut
4	Gas connector of pulsation damper
5	Pressure gauge
6	Gas connector

1. Read section Safety instructions.
2. Make sure that the maximum operating pressure of the filling device matches your local requirements. See section Pressure gauge for pulsation dampers D.
3. Turn connection handle (1) counter-clockwise until the end position.
   - This ensures that the non-return valve of the pulsation damper stays closed when connecting the filling device.
4. Turn gas relief handle (2) clockwise until the end position.
   - This ensures that gas relief opening (2a) is closed.
5. Remove the protective cap from gas connectors (4, 6).
   - Make sure not to lose the O-ring.
6. Connect union nut (3) to gas connector (4) of pulsation damper.
7. For nitrogen filling:

   WARNING
   Danger of explosion
   Death or serious personal injury
   - If the pressure in the nitrogen bottle exceeds the maximum operating pressure of the filling device, install a pressure reducing valve at the valve of the nitrogen bottle and adjust it to the pressure limit.

   - Connect the nitrogen bottle to gas connector (6).
8. For air filling:
   - Connect the compressed-air device to gas connector (6) using the tyre-valve adapter. See section Connecting the tyre-valve adapter for air filling (up to 8 bar).

3.5.4 Checking and adjusting the preload pressure of pulsation dampers DB and DBG

Pulsation dampers with separating diaphragm are factory-set with air to a preload pressure of 2.7 bar.

The pulsation damper DB has no pressure gauge.

The pulsation damper DBG is equipped with a pressure gauge.

For adjustment of preload pressure up to 8 bar via the tyre-valve adapter, see section Adjusting the preload pressure with air via the tyre-valve adapter (DB and DBG, up to 8 bar).

1. Read section Safety instructions.
2. Perform the checks before startup. See section Checks before startup.
3. Depressurise the dosing system.

Adjusting the preload pressure via the filling device

1. Connect the filling device. See section Connecting the filling device.
   The following steps refer to fig. Filling device.
2. To check the preload pressure:
   - Turn connection handle (1) clockwise until the preload pressure is displayed at pressure gauge (5).
   - Read the pressure at the pressure gauge.
   - Observe section Recommended pressure settings.
3. To decrease the preload pressure:
   - Carefully turn gas relief handle (2) counter-clockwise to relieve gas until the correct preload pressure is displayed at pressure gauge (5).
4. To increase the preload pressure:

   WARNING
   Danger of explosion
   Death or serious personal injury
   - Do not lead oxygen into pulsation dampers.
   - For system pressures above 10 bar only use nitrogen to preload the pulsation damper.
   - For system pressures up to 10 bar use air or nitrogen to preload the pulsation damper.
   - Do not exceed the maximum operating pressure of the pulsation damper.

   - Observe section Recommended pressure settings.
   - If only nitrogen is allowed for your application, relieve the air from the pulsation damper before filling it with nitrogen.
   - Fill the pulsation damper with the allowed preload gas until the correct preload pressure is displayed at pressure gauge (5).
5. To disconnect the filling device:
   - Make sure that the gas source is closed.
   - Turn connection handle (1) counter-clockwise until the end position.
   - Carefully depressurise the gas line by turning gas relief handle (2) counter-clockwise.
   - Turn gas relief handle (2) clockwise until the end position.
   - Make sure not to lose any O-rings or gaskets.
   - Disconnect the gas line.
   - Unscrew union nut (3) and remove the filling device.
6. Reinstall the protective caps at gas connectors (4, 6).
   - Make sure that the O-ring is placed correctly.

The product is ready for operation.

3.5.5 Adjusting the preload pressure with air via the tyre-valve adapter (DB and DBG, up to 8 bar)

1. Read section Safety instructions.
2. Perform the checks before startup. See section Checks before startup.
3. Depressurise the dosing system.
4. Connect the tyre-valve adapter. See section Connecting the tyre-valve adapter for air filling (up to 8 bar).
5. To check the preload pressure:
   - Read the pressure at the pressure gauge of the pulsation damper or at the pressure gauge of the compressed-air device.
6. To decrease the preload pressure:
   - Use the gas relief function of your compressed-air device to relieve gas until the correct preload pressure is displayed at the pressure gauge.
7. To increase the preload pressure:

   WARNING
   Danger of explosion
   Death or serious personal injury
   - Do not exceed the maximum operating pressure of the pulsation damper.

   - Observe section Recommended pressure settings.
   - Fill the pulsation damper with air until the correct preload pressure is displayed at the pressure gauge.
8. Disconnect the compressed-air device and the tyre-valve adapter.
   - Make sure not to lose any O-rings or gaskets.
9. Reinstall the protective cap at the gas connector of the pulsation damper.
   - Make sure that the O-ring is placed correctly.

The product is ready for operation.

4. Handling and storing the product

4.1 Handling the product

- Wear safety shoes during transport and installation.
- Wear a helmet if lifting the product higher than hip level.
- Use appropriate lifting and transporting equipment.
- Make sure that the product is not exposed to any point load during the transport.
- Avoid strong impacts.
- Observe the permissible ambient conditions. See section Storage and ambient temperatures.

4.2 Storing the product

- Store the product in the original packaging.
- Observe the permissible ambient conditions. See section Storage and ambient temperatures.
- The storage location must be protected from rain, humidity, condensation, direct sunlight and dust.

5. Product introduction

5.1 Intended use

Pulsation dampers D, DB and DBG are intended to dampen pressure pulsations in the discharge line of dosing systems with dosing pumps.

Pulsation dampers SD and CSD are intended to dampen pressure pulsations in the suction line of dosing systems with dosing pumps. Pulsation dampers CSD can also be used to calibrate the dosing pump. In installations without flooded suction, pulsation dampers CSD can be filled with the manual vacuum pump kit.

Pulsation dampers are suitable for liquid, non-abrasive, non-flammable and non-combustible media.

Observe the freezing and boiling points of the medium.

Make sure that parts in contact with the medium are resistant to the medium under operating conditions.

The product must not be used for any other purpose than the one mentioned above.

Grundfos pulsation dampers are classified by their pressure-volume product according to the European Pressure Equipment Directive. The pressure-volume product is calculated by multiplying the pressure in bar with the volume in litre.

In accordance with the European Pressure Equipment Directive:

- Pulsation dampers with a pressure-volume product below 50 are designed and assessed according to sound engineering practice and carry no CE mark.
- Pulsation dampers with a pressure-volume product of 50 and more are assessed according to Module A and carry a CE mark.

5.1.1 Improper operating methods

The operational safety of the product is only guaranteed, if it is used in accordance with section Intended use.

The product must not be used for:

- operation in potentially explosive areas
- frozen media
- crystallising media.

5.2 Identification

5.2.1 Nameplate

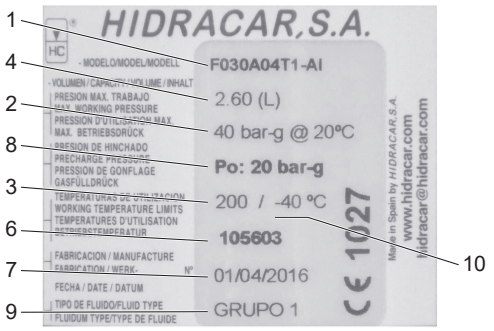

TM081002

Nameplate (type DB and DBG)

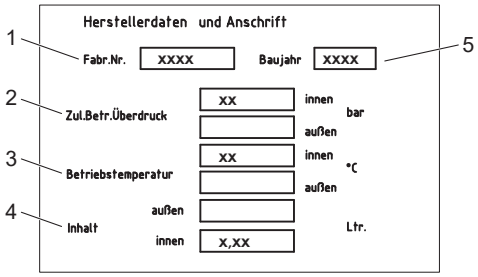

TM070052

Nameplate (type SD)

Pos.	Description
1	Supplier type designation
2	Max. operating pressure
3	Maximum operating temperature [°C]
4	Damper volume [l]
5	Supplier year of production
6	Supplier plant code
7	Supplier date of production
8	Preload pressure (only DB, DBG)
9	Fluid type
10	Minimum operating temperature [°C]

Nameplate all types

Pos.	Description
1	Type designation
2	Product number
3	Serial number
4	Material
5	Gasket
6	Volume
7	Max. operating pressure
8	Country of origin
9	Production code (year and week)

5.2.2 Type key for pulsation dampers D, DB, DBG

The type key is designed for the precise identification of the product and not for configuration purposes. It can be found on the product packaging.

Example: **PULS.DAMPER-DBG0,30L PV/T G3/4-B4/B3**

Product type	
PULS.DAMPER-DBG0,30L PV/T G3/4-B4/B3	
Pulsation damper	

Design	
PULS.DAMPER-**DBG**0,30L PV/T G3/4-B4/B3	
D	For discharge side, without separating diaphragm
DB	For discharge side, with separating diaphragm
DBG	For discharge side, with separating diaphragm and pressure gauge
DBG-H	For discharge side, with separating diaphragm and pressure gauge for high pressure applications

Damper volume in litres
PULS.DAMPER-DBG**0,30L** PV/T G3/4-B4/B3

Body material	
PULS.DAMPER-DBG0,30L **PV**/T G3/4-B4/B3	
PP	Body and connector material: polypropylene
PVC	Body and connector material: polyvinyl chloride
PV	Body and connector material: polyvinylidene fluoride (PVDF)
SS	Body material: stainless steel

Gasket material*	
PULS.DAMPER-DBG0,30L PV/**T** G3/4-B4/B3	
E	EPDM
V	FKM
T	PTFE
-	No gaskets included

*For design DB and DBG: The material applies also to the separating diaphragm.

Threaded connection	
PULS.DAMPER-DBG0,30L PV/T **G3/4**-B4/B3	
G1/4	Internal thread Rp 1/4
G3/8	Internal thread Rp 3/8
G1/2	Internal thread Rp 1/2
G3/4	Internal thread Rp 3/4
G1	Internal thread Rp 1
G1 1/2	Internal thread Rp 1 1/2
G2	Internal thread Rp 2

Dosing line connector	
PULS.DAMPER-DBG0,30L PV/T G3/4-**B4/B3**	
WO	Without dosing line connector
B3/F	External diameter 16 mm, internal diameter 12 mm
B4/B3	External diameter 25 mm, internal diameter 20 mm
B0/H	External diameter 25 mm, internal diameter 20 mm
B4/H	External diameter 25 mm, internal diameter 20 mm
K/B0	External diameter 40 mm, internal diameter 25 and 32 mm
B5/B4	External diameter 40 mm, internal diameter 25 and 32 mm

5.2.3 Type key for pulsation dampers SD, CSD

The type key is designed for the precise identification of the product and not for configuration purposes. It can be found on the product packaging.

Example: **PULS.DAMPER-CSD0,5L PVC/V,E G1/2-B3/F**

Product type	
PULS.DAMPER-CSD0,5L PVC/V,E G1/2-B3/F	
Pulsation damper	

Design	
PULS.DAMPER-**CSD**0,5L PVC/V,E G1/2-B3/F	
SD	For suction side, without calibration function
CSD	For suction side, with calibration function

Damper volume in litres
PULS.DAMPER-CSD**0,5L** PVC/V,E G1/2-B3/F

Body material	
PULS.DAMPER-CSD0,5L **PVC**/V,E G1/2-B3/F	
PVC	Body and connector material: polyvinyl chloride
SS	Body material: stainless steel

Gasket material	
PULS.DAMPER-CSD0,5L PVC/**V,E** G1/2-B3/F	
V,E	FKM and EPDM gaskets are included
-	No gaskets included

Threaded connection	
PULS.DAMPER-CSD0,5L PVC/V,E **G1/2**-B3/F	
G1/4	Internal thread Rp 1/4
G1/2	Internal thread Rp 1/2
G3/4	Internal thread Rp 3/4
G1	Internal thread Rp 1
-	No threaded connection

Dosing line connector	
PULS.DAMPER-CSD0,5L PVC/V,E G1/2-**B3/F**	
WO	Without dosing line connector
B3/F	External diameter 16 mm, internal diameter 12 mm
B0/H	External diameter 25 mm, internal diameter 20 mm
B4/H	External diameter 25 mm, internal diameter 20 mm
Y/K	Internal diameters 40, 50 and 63 mm
50/K	Internal diameters 40 and 50 mm
C9/	External ASTM / BS pipe 1/2", internal ASTM / BS pipe 3/8"
C8/C7	External ASTM / BS pipe 1", internal ASTM / BS pipe 3/4"
-/C8	Internal ASTM / BS pipe 1"

5.3 Product description

Pressure fluctuations in dosing systems can cause stress and damage to the equipment, especially with rigid pipe work.

Pulsation dampers are used to even out the pulsating flow and pressure produced by positive displacement pumps like diaphragm dosing pumps. They can be installed before and after the pump.

5.3.1 Suction-side pulsation dampers SD and CSD

Pulsation dampers SD and CSD help to ensure the accuracy of dosing pumps, which is highly dependent on proper suction conditions. In installations with long inlet lines or inlet lines with a small diameter, the use of an SD or CSD pulsation damper is recommended.

Suction-side pulsation dampers SD

Pulsation dampers SD are made of stainless steel. They have two dosing line connections for in-line installation. The flow direction is arbitrary.

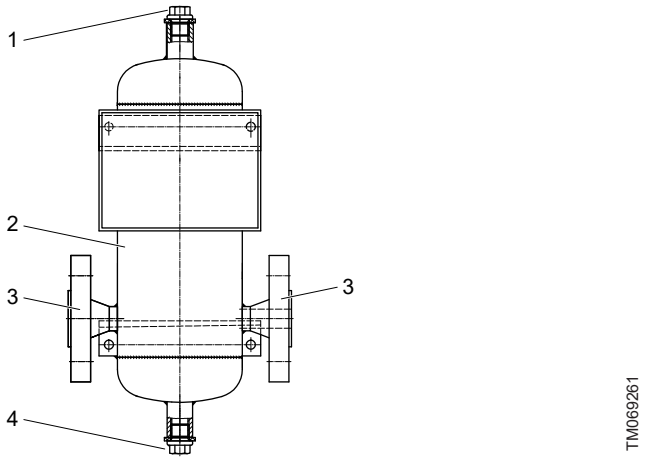

Example of a suction-side pulsation damper SD with flange connection

Pos.	Description
1	Aeration screw
2	Body
3	Dosing line connector (inlet/outlet)
4	Drain screw

Suction-side pulsation dampers CSD

Pulsation dampers CSD have a transparent PVC cylinder with a fine volume scale. When combined with a shut-off valve in the inlet line, they can also be used for calibration or flow measurement. In installations without flooded suction, the optional manual vacuum pump kit simplifies startup of the dosing pump.

Pulsation dampers CSD can be used for multiple pumps that are supplied by the same inlet line. Observe section Technical data.

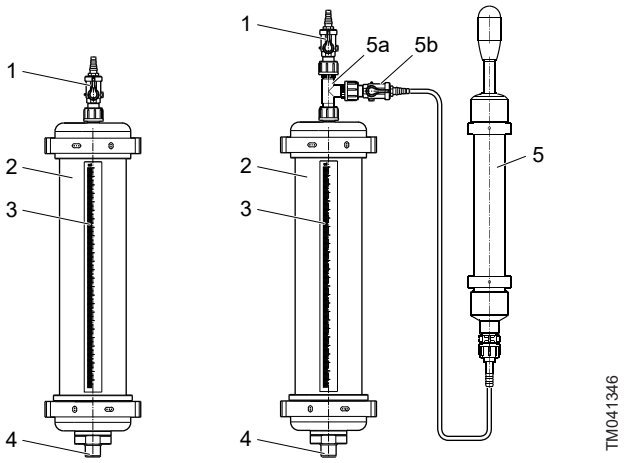

Suction-side pulsation damper CSD (left) and CSD with optional manual vacuum pump kit (right)

Pos.	Description
1	Aeration valve
2	Transparent PVC cylinder
3	Volume scale
4	Dosing line connector (inlet)
5*	Manual vacuum pump
5a*	T-piece
5b*	Shut-off valve

*Part of optional manual vacuum pump kit

5.3.2 Discharge-side pulsation dampers D

Pulsation dampers D optimise the dosing accuracy and protect the pump and the outlet line against pressure surges.

Pulsation dampers D have no separating diaphragm and thus cannot be preloaded. During startup of the empty dosing system, air is trapped inside the pulsation damper and forms the gas cushion. The amount of air in the pulsation damper depends on its size and cannot be adjusted.

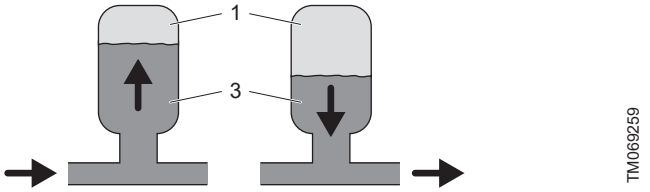

Principle of operation

Pos.	Description
1	Air cushion
3	Dosing medium

As a standard, pulsation dampers D have no pressure gauge. They can optionally be equipped with a pressure gauge assembly for easy reading of the pressure during operation.

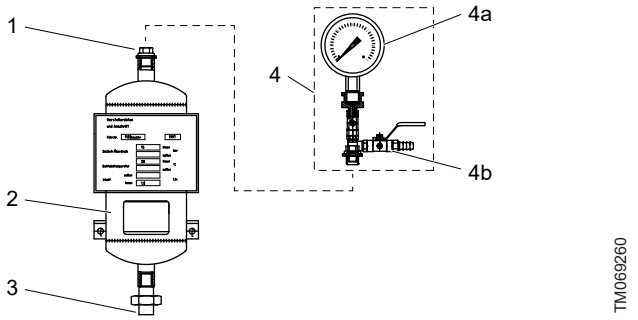

Pulsation damper D

Pos.	Description
1	Aeration screw
2	Body
3	Dosing line connector (inlet)
4	Optional pressure gauge assembly
4a	Pressure gauge
4b	Aeration valve

! Observe that the air in pulsation dampers D is dissolved by the dosing medium over time. Regularly check the dampening performance and refill the gas cushion if necessary. See section Refilling pulsation damper D with air.

5.3.3 Discharge-side pulsation dampers DB and DBG

Pulsation dampers DB and DBG are especially designed for installations with long outlet lines and with rigid pipes. The pulsation dampers optimise the dosing accuracy and protect the pump and the outlet line against pressure surges.

Pulsation dampers DB and DBG have an air or nitrogen cushion inside, which is separated from the dosing medium by a separating diaphragm. This keeps the preload pressure stable for a long time and avoids that air or nitrogen is dissolved in the dosing medium.

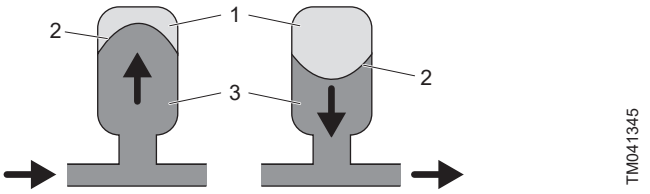

Principle of operation

Pos.	Description
1	Air or nitrogen cushion
2	Separating diaphragm
3	Dosing medium

In PVC, PP, and stainless steel pulsation dampers, an FKM or EPDM bladder is used as separating diaphragm, in PVDF pulsation dampers a PTFE bellows is used as separating diaphragm.

Pulsation dampers DBG include a pressure gauge for easy setting of the correct pressure. Pulsation dampers DB have no pressure gauge.

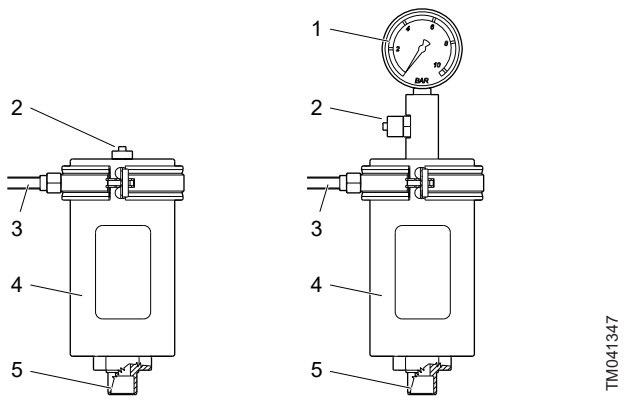

PVC version of discharge-side pulsation damper DB (left) and DBG (right)

Pos.	Description
1	Pressure gauge
2	Gas connector with non-return valve
3	Wall mounting material
4	Body
5	Dosing line connector (inlet)

6. Operating the product

! Observe that the air in pulsation dampers D is dissolved by the dosing medium over time. Regularly check the dampening performance and refill the gas cushion if necessary. See section Refilling pulsation damper D with air.

6.1 Using pulsation damper CSD for pump calibration or flow measurement

6.1.1 Calibration or flow measurement with flooded suction

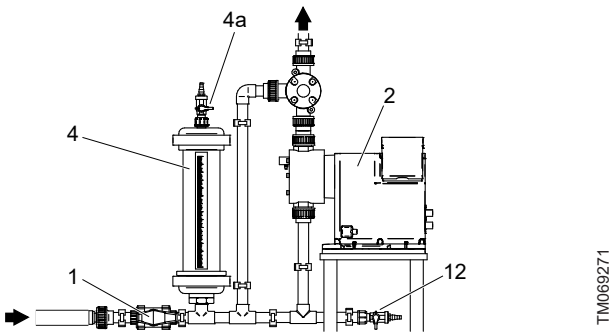

Calibration or flow measurement with flooded suction

Pos.	Description
1	Shut-off valve
2	Dosing pump
4	Pulsation damper
4a	Aeration valve
12	Drain valve

1. Make sure that the system is commissioned correctly. See section Commissioning with flooded suction.
2. Stop the dosing pump.
3. Make sure that shut-off valve (1) is open and aeration valve (4a) is closed.
4. For calibration (only for pumps with calibration function):
   - Slowly open aeration valve (4a) and close it again when the pulsation damper (4) is filled exactly to the "0 ml" graduation.
   - Close shut-off valve (1).
   - Open aeration valve (4a).
   - Perform the calibration according to the pump manual. Avoid that the liquid level falls below the transparent part of the pulsation damper.
   - After the pump is calibrated, keep it stopped and set it back to normal operation menu.
5. For flow measurement:
   - Slowly open aeration valve (4a) and close it again when the pulsation damper (4) is filled slightly above the "0 ml" graduation.
   - Close shut-off valve (1).
   - Open aeration valve (4a).
   - Have a stopwatch ready.
   - Start the dosing pump.
   - Start the stopwatch when the falling liquid level in the pulsation damper passes the "0 ml" graduation.
   - Stop the stopwatch when the falling liquid level in the damper passes the lowest graduation.
   - Stop the pump immediately. Avoid that the liquid level falls below the transparent part of the pulsation damper.
   - Calculate the flow rate of the dosing pump:

Flow [l/h]	=	Dosed volume [ml]	/	time [s]	x	3.6

6. Slowly open shut-off valve (1) and close it again when the pulsation damper (4) is filled by 70 % with dosing medium.
7. Close aeration valve (4a)
8. Open shut-off valve (1).

The system is ready to be started again.

6.1.2 Calibration or flow measurement without flooded suction

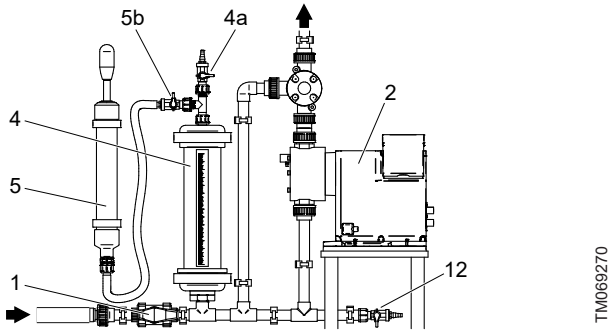

Commissioning without flooded suction

Pos.	Description
1	Shut-off valve
2	Dosing pump
4	Pulsation damper
4a	Aeration valve
5	Manual vacuum pump
5b	Shut-off valve
12	Drain valve

1. Make sure that the system is commissioned correctly. See section Commissioning with flooded suction.
2. Stop the dosing pump.
3. Make sure that shut-off valve (1) is open and aeration valve (4a) is closed.
4. Open shut-off valve (5b).
5. For calibration (only for pumps with calibration function):
   - Use the manual vacuum pump (5) to fill the pulsation damper (4) exactly to the "0 ml" graduation.
   - Close shut-off valve (5b).
   - Close shut-off valve (1).
   - Open aeration valve (4a).

- Perform the calibration according to the pumps manual. Avoid that the liquid level falls below the transparent part of the pulsation damper.
- After the pump is calibrated, keep it stopped and set it back to normal operation menu.

6. For flow measurement:
   - Use the manual vacuum pump (5) to fill the pulsation damper (4) slightly above the "0 ml" graduation.
   - Close shut-off valve (5b).
   - Close shut-off valve (1).
   - Open aeration valve (4a).
   - Have a stopwatch ready.
   - Start the dosing pump.
   - Start the stopwatch when the falling liquid level in the pulsation damper passes the "0 ml" graduation.
   - Stop the stopwatch when the falling liquid level in the damper passes the lowest graduation.
   - Stop the pump immediately. Avoid that the liquid level falls below the transparent part of the pulsation damper.
   - Calculate the flow rate of the dosing pump:

Flow [l/h]	=	Dosed volume [ml]	/	time [s]	x	3.6

7. Close aeration valve (4a)
8. Open shut-off valve (1).
9. Open shut-off valve (5b).
10. Use the manual vacuum pump (5) to fill the pulsation damper (4) by 70 % with dosing medium.
11. Close shut-off valve (5b).

The system is ready to be started again.

7. Maintaining the product

7.1 Safety instructions

The product must only be serviced by authorised and qualified persons.

Read the manuals of all system components before starting any work on the system.

When working with chemicals, the accident prevention regulations applicable at the installation site must be applied.

Observe the chemical manufacturer's safety data sheets when handling chemicals.

When working on the product or connections and lines, always wear protective clothing (e.g. safety goggles and gloves). The system must be pressureless.

Observe section Handling the product.

Wipe up spilled liquid immediately to avoid slipping hazard.

7.2 Refilling pulsation dampers SD and CSD

Pulsation dampers SD and CSD must be refilled with dosing medium when the level of dosing medium in the pulsation damper falls below 25 %.

To refill the pulsation damper, follow the instructions for commissioning. See section *Commissioning pulsation dampers SD and CSD*.

7.3 Refilling pulsation damper D with air

To refill the pulsation damper D with air, the pulsation damper must be drained completely.

1. Read section Safety instructions.
2. Stop the dosing system.

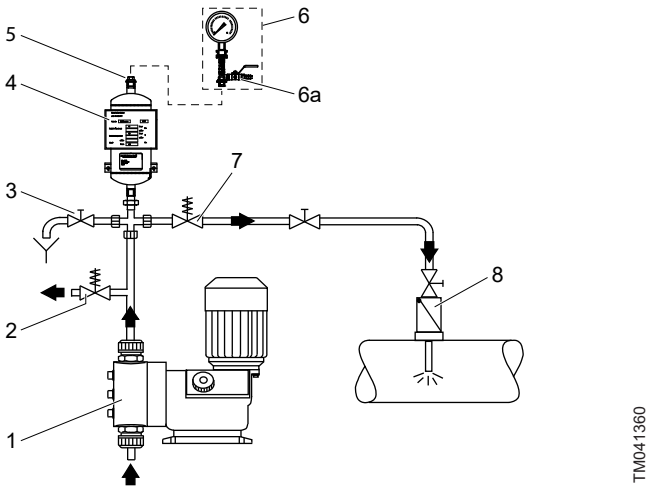

Installation example of pulsation damper D

Pos.	Description
1	Dosing pump
2	Pressure relief valve PRV
3	Drain valve
4	Pulsation damper D
5	Aeration screw
6	Optional pressure gauge assembly
6a	Aeration valve
7	Pressure loading valve PLV
8	Injection unit

CAUTION
Chemical hazard
Minor or moderate personal injury
- Collect escaping dosing medium safely.

3. Carefully open drain valve (3) to depressurise the dosing system.
4. Aerate the pulsation damper by carefully opening aeration screw (5) or aeration valve (6a), if installed.
   - Wait until the pulsation damper is drained completely.
5. Close aeration screw (5) or aeration valve (6a).
6. Close drain valve (3).
7. Perform commissioning again. See section Commissioning pulsation dampers D.

7.4 Checking and adjusting the preload pressure of pulsation dampers DB and DBG

Check the preload pressure:

- one week after initial commissioning
- every three months

Readjust the preload pressure, if necessary. Proceed according to the respective section:

- Checking and adjusting the preload pressure of pulsation dampers DB and DBG
- Adjusting the preload pressure with air via the tyre-valve adapter (DB and DBG, up to 8 bar)

7.5 Replacing the separating diaphragm of pulsation dampers DB and DBG

A special tool and training is required to replace the diaphragm.

Depressurise and clean the pulsation damper and send it back to Grundfos together with a filled-in safety declaration. See appendix of this document.

7.5.1 Dismantling the pulsation damper from the dosing system

1. Read section *Safety instructions*.
2. Stop the dosing system.
3. Depressurise the dosing system.
4. Empty the complete discharge side of the dosing system and flush it with a suitable non-hazardous liquid.

CAUTION
Pressurised product
Minor or moderate personal injury
- Handle pressurised products with care.
- Do not drop the product.

5. Remove the pulsation damper from the dosing system.
6. Connect the filling device. See section Connecting the filling device.
   The following steps refer to fig. Filling device.
7. Relieve the preload pressure as follows:
   - Turn connection handle (1) clockwise until the preload pressure is displayed at pressure gauge (5).
   - Carefully turn gas relief handle (2) counter-clockwise and wait until the preload pressure is relieved completely.
8. Remove the filling device.
9. Remove the gas connector.
   - This ensures that there is no residual gas pressure in the pulsation damper.
10. Clean the pulsation damper with a suitable cleaning agent.
11. Make sure that no hazardous substances remain in the pulsation damper.
12. Put the pulsation damper into a suitable packaging.
13. Fill in the safety declaration. See appendix of this document.
14. Send the safety declaration to Grundfos together with the product.

8. Spare Parts

See service kit catalogue:
http://net.grundfos.com/qr/i/96488862_23

9. Fault finding

9.1 Pulsation damping effect too small or diminishing.

Cause	Remedy
For pulsation dampers D: The air cushion has been absorbed by the dosing medium.	Deaerate the pulsation damper.
For pulsation dampers DB and DBG: Preload pressure is too high or too low.	Set the correct preload pressure.

9.2 After start-up, the pulsation damper does not produce the desired effect.

Cause	Remedy
Pulsation damper D is the wrong size.	Use a pulsation damper of the correct size.
For pulsation dampers DB and DBG: Preload pressure is too high or too low.	Set the correct preload pressure.

10. Technical data

10.1 Sizing of pulsation dampers

Information on sizing of pulsation dampers can be found in the data booklet:
http://net.grundfos.com/qr/i/96700284

10.2 Permissible media temperature

Body material	Maximum operating pressure	
	up to 10 bar	> 10 bar
PVC, PP	0 °C to +45 °C	-
PVDF	-10 °C to +45 °C	-10 °C to +45 °C
Stainless steel	70 °C (higher temperature possible with reduced pressure) 145 °C (short-term with max. 2 bar)	

10.3 Storage and ambient temperatures

	Maximum operating pressure	
	up to 10 bar	> 10 bar
Min./Max. ambient temperature [°C]	0/+45	0/+45
Min./Max. storage temperature [°C]	-10/+50	

10.4 Suction-side pulsation dampers SD

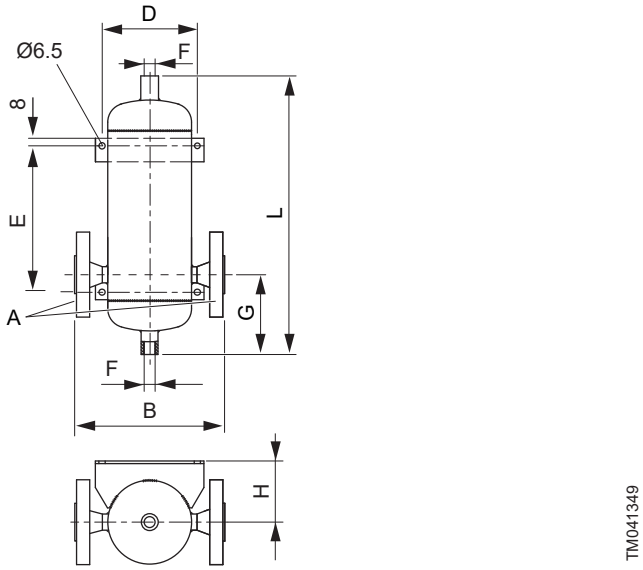

Suction-side pulsation damper SD

Body material	Stainless steel 1.4301

Damper volume [l]	Max. operating pressure [bar]	Connections	
		A	F
1	40	R 1/4	R 1/4
3	40	R 3/4	R 1/4
5	25	R 3/4	R 1/4
10	16	Flange DN 32	R 1/4

Damper volume [l]	Max. operating pressure [bar]	Dimensions [mm]					
		B	D	E	G	H	L
1	40	139	89	155	85	65	295
3	40	205	133	215	105	87	375
5	25	240	168	245	110	100	395
10	16	248	168	500	125	100	645

10.5 Suction-side pulsation dampers CSD

10.5.1 Technical data

Maximum operating pressure	[bar]	2
Body material		PVC
Sight glass material		PVC
Gasket material		FKM EPDM PTFE

Damper volume [l]	Max. pump stroke volume [ml]	Max. number of pumps with max. stroke volume	Scale division [ml]
0.25	2	3	2
0.5	7	3	5
1.5	19	3	20
3.0	45	2	25
5.0	75	3	10
10.0	171	3	50

10.5.2 Dimensions

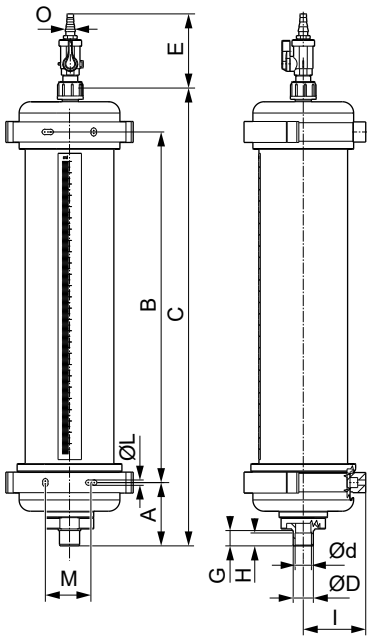

Suction-side pulsation damper CSD, 0.25 l to 3 l

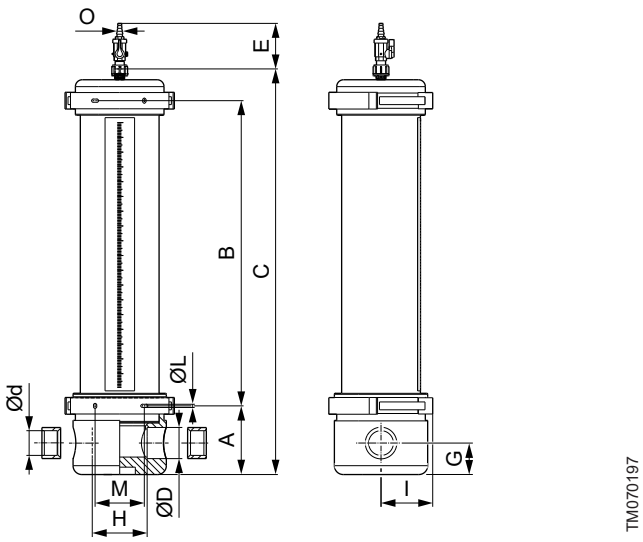

Suction-side pulsation damper CSD, 5 l and10 l

Damper volume [l]	Dimensions [mm]						
	A	B	C	ØD	Ød	E	G
0.25	50	270	360	16	12	92	14
0.5	50	340	431	16	12	92	14
1.5	75	343	465	25	20	92	19
3.0	79	435	568	25	20	92	19
5.0	118.5	700	871	50	40	92	51
10.0	139.5	600	824	63	50 40	92	64

Damper volume [l]	Dimensions [mm]				
	H	I	ØL	ØM	O
0.25	12	40	6.5	-	8-13
0.5	12	47	6.5	-	8-13
1.5	16	70	6.5	40	8-13
3.0	16	78	6.5	60	8-13
5.0	71.5	77.5	6.5	60	8-13
10.0	111.5	95	6.5	90	8-13

10.6 Discharge-side pulsation dampers D

10.6.1 Technical data

Separating diaphragm included	No
Recommended number of pumps per pulsation damper	1

Damper volume [l]	Max. pump stroke volume [ml]	Body material	Connection material	Max. operating pressure [bar]
0.35	2	Stainless steel 1.4301	Stainless steel 1.4571	40
1	7			
3	45			
5	75			25
10	131	Stainless steel 1.4571	Stainless steel 1.4571	16
20	500			6

10.6.2 Dimensions

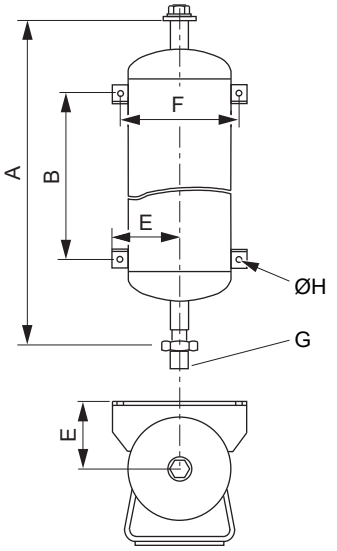

Discharge-side pulsation damper D

Damper volume [l]	Dimensions [mm]					G
	A	B	E	F	ØH	
0.35	215	85	50	83	6.5	R 1/4
1	277	125	65	101	6.5	R 1/4
3	335	160	87	150	6.5	R 3/4
5	345	190	100	170	6.5	R 3/4
10	615	460	100	170	6.5	Flange DN 32
20	562	300	162	270	8.5	Flange DN 65

10.7 Discharge-side pulsation dampers DB and DBG

10.7.1 Technical data

Separating diaphragm included		Yes
Separating diaphragm material		see section *Type key for pulsation dampers D, DB, DBG*
Factory-set preload pressure*	[bar]	2.7
Recommended number of pumps per pulsation damper		1

*Different value possible on customer request.

Damper volume [l]	Max. pump stroke volume [ml]	Body material	Max. operating pressure** [bar]
0.09	2	SS*	250
0.15	7	PVDF	20
0.18	7	PVC, PP	10
		SS*	180
0.3	19	PVDF	20
0.36	19	PVC, PP	10
		SS*	180
0.7	45	PVDF	20
0.65	45	PVC, PP	10
		SS*	50
1.4	75	PVDF	20
1.5	75	PVC, PP	10
		SS*	40
2.6	131	PVC, PP	10
		PVDF	20
		SS*	30
5.6	280	PVC, PP	10
		PVDF	20
		SS*	40
10.0	460	PVDF	20
10.4	460	PVC, PP	10
		SS*	30

*Stainless steel 1.4404

**For pulsation damper DBG observe the maximum operating pressure of the pressure gauge.

10.7.2 Dimensions

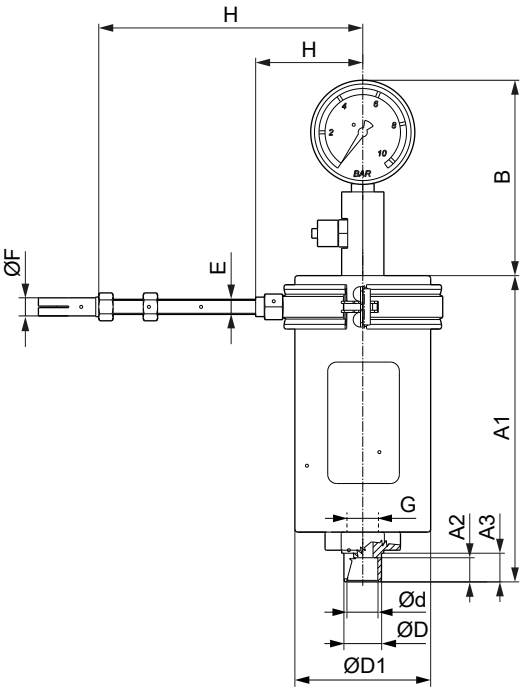

Pulsation damper DBG, PVC version

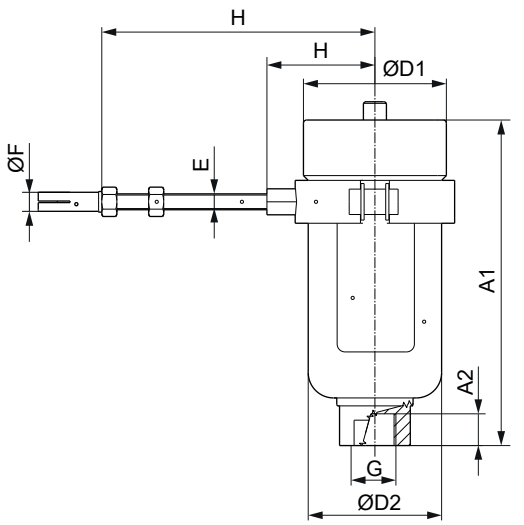

Pulsation damper DB, stainless steel version

Dimensions of the product

Damper volume [l]	Body material	A1 [mm]	A2 [mm]	A3 [mm]	ØD1 [mm]	ØD2 [mm]
0.09	SS	100	14	-	55	-
0.15	PVDF	205	12	14	70	53
0.18	PVC, PP	161	12	14	80	-
	SS	118	14	-	70	-
0.3	PVDF	267	20	25	84	63
0.36	PVC, PP	203	20	25	90	-
	SS	161	16	-	85	-
0.7	PVDF	138	20	25	98	84
0.65	PVC, PP	263	20	25	100	-
	SS	205	20	-	90	84
1.4	PVDF	270	22	28	125	104
1.5	PVC, PP	335	22	28	130	-
	SS	245	25	-	110	104
2.6	PVC, PP	365	22	28	160	-
	PVDF	360	22	28	170	156
	SS	295	27	-	140	129
5.6	PVC, PP	458	32	-	198	-
	PVDF	490	32	-	170	156
	SS	414	30	-	170	156
10.0	PVDF	500	50	-	250	-
10.4	PVC, PP	441	50	-	250	206
	SS	442	30	-	220	206

Damper volume [l]	Body material	H [mm]	ØF [mm]	B [mm]	E
0.09	SS	52.5 - 152.5			
0.15	PVDF	53-127			
0.18	PVC, PP	67-171			
	SS	64-168			
0.3	PVDF	58-175			
0.36	PVC, PP	71-175			
	SS	67-171			
0.7	PVDF	67-171			
0.65	PVC, PP	78-152			
	SS	67-171			
1.4	PVDF	77-177			
1.5	PVC, PP	90-190	12	129	M 10
	SS	77-177			
2.6	PVC, PP	105-205			
	PVDF	103-203			
	SS	89.5 - 189.5			
5.6	PVC, PP	124-224			
	PVDF	103-203			
	SS	103-203			
10.0	PVDF	150-250			
10.4	PVC, PP	128-228			
	SS	128-228			

Dimensions of the connections

Damper volume [l]	Body material	Connection ØD [mm]	Connection Ød [mm]	Connection G internal thread
0.09	SS	-	-	G 3/8
0.15	PVDF	16	12	G 1/2
0.18	PVC, PP			
	SS	-	-	
0.3	PVDF	25	20	G 3/4
0.36	PVC, PP			
	SS	-	-	G 1/2
0.7	PVDF	25	20	G 3/4
0.65	PVC, PP			
	SS	-	-	
1.4	PVDF	40	32	G 3/4
1.5	PVC, PP			G 1
	SS	-	-	G 3/4
2.6	PVC, PP	40	32	G 1
	PVDF			G 3/4
	SS	-	-	G 1
5.6	PVC, PP	-	-	G 1 1/2
	PVDF	-	-	G 1
	SS	-	-	G 1 1/2
10.0	PVDF	-	-	G 2
10.4	PVC, PP			
	SS			

11. Accessories

11.1 Manual vacuum pump kit for pulsation dampers CSD

In installations without flooded suction, the pulsation damper CSD can be filled by the manual vacuum pump kit. This makes startup of the dosing pump easier and prepares the pulsation damper CSD for calibration of the pump.

A manual vacuum pump kit includes:

- Ball valve, connection G 5/8
- T-piece, connection G 5/8
- Hose
- Manual vacuum pump
- Holder for wall mounting

Materials:

- Vacuum pump: PVC
- Ball valve and T-piece: PVC
- Gasket: FKM.

11.1.1 Dimensions

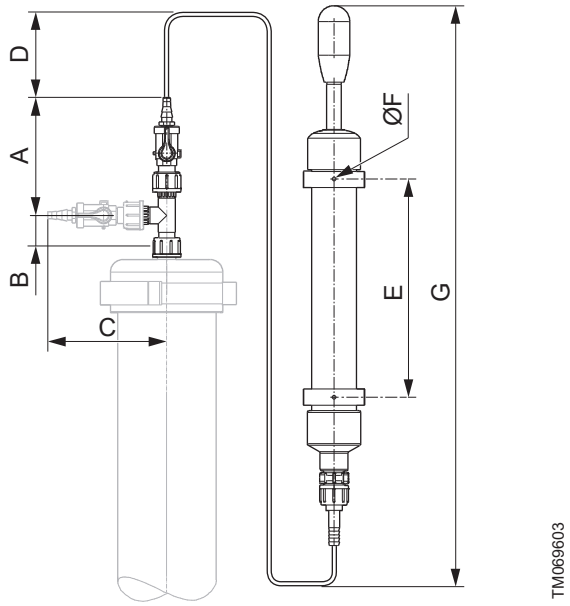

Manual vacuum pump kit

A [mm]	B [mm]	C [mm]	D [mm]	E [mm]	ØF [mm]	G [mm]
131	34	132.5	50	242	6.2	675-875

11.1.2 Order data

Description	Product number
Manual vacuum pump kit	99218131

11.2 Filling devices for pulsation dampers DB and DBG

Filling devices make the adjustment of the preload pressure of pulsation dampers easy. A filling device can be connected to the filling valve of a pulsation damper and to a local compressed-air source or a nitrogen bottle. When the pressure is adjusted, the filling device can be removed.

Filling devices are available with different pressure gauges.

A set includes a filling device with pressure gauge and a hose with connections for a nitrogen bottle.

Hose connections:

- Nitrogen bottle: W24.3 x 1 1/4"
- Filling device: G 1/4.

11.2.1 Dimensions and order data

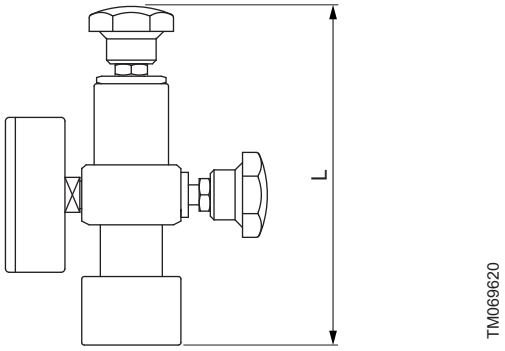

Filling device for plastic or stainless-steel pulsation dampers

Description	L [mm]	Max. operating pressure [bar]	Product number
Filling device with hose	136	25	96727342
		60	96727343
		160	96727344
		250	96727345

11.3 Tyre-valve adapter for pulsation dampers DB and DBG

A tyre-valve adapter allows the use of common air pumps with tyre valves for filling the pulsation damper with air.

11.3.1 Dimensions

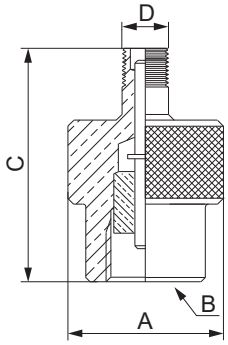

Tyre-valve adapter

A [mm]	B	C [mm]	D [mm]
25	G 1/4	38	Vg 8

11.3.2 Order data

Description	Max. operating pressure [bar]	Product number
Tyre-valve adapter, for use in conjunction with compressed-air filling device or pressure gauge	8	96727332

11.4 Pressure gauge for pulsation dampers D

Assembly of pressure gauge with ball valve for venting.

Materials:

- Body: 1.4571
- Gaskets: PTFE.

11.4.1 Dimensions

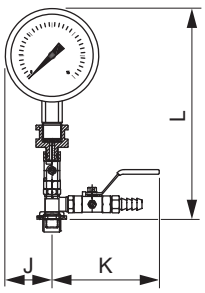

Pressure gauge for pulsation damper D

J [mm]	K [mm]	L [mm]
~ 50.5	~ 116	~ 228

11.4.2 Order data

Description	Max. operating pressure [bar]	Product number
Pressure gauge assembly	16	98031549
	40	98031550

11.5 Pressure gauge for pulsation dampers DB

The following pressure gauges can be used to retrofit the discharge-side pulsation dampers DB.

11.5.1 Dimensions and order data

Select the suitable variant according to the maximum operating pressure of the pulsation damper.

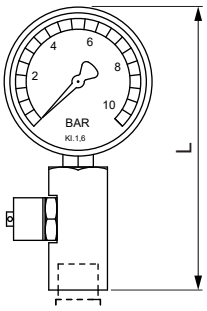

Pressure gauge for pulsation damper DB

Description	L [mm]	Max. operating pressure [bar]	Product number
Pressure gauge for pulsation damper DB	129	10	95730263
		25	95730264
		60	98031543
		160	98031544
		250	98031545

12. Disposing of the product

This product or parts of it must be disposed of in an environmentally sound way:

1. Use the public or private waste collection service.
2. If this is not possible, contact the nearest Grundfos company or service workshop.

A.1. Safety declaration

- Please copy, fill in and sign this sheet and attach it to the product returned for service.
- Fill in this document using English or German language.

Fault description

- Please give a short description of the fault and indicate if the diaphragm is damaged:

Declaration

We hereby declare that this product is free from hazardous chemicals, biological and radioactive substances:

Type designation (see nameplate):
Product number:

The product was used with the following dosing medium:

No dosing medium or water:
A chemical solution, name:

Date and signature:

Company stamp:

Argentina
Bombas GRUNDFOS de Argentina S.A.
Ruta Panamericana km. 37.500industin
1619 - Garín Pcia. de B.A.
Tel.: +54-3327 414 444
Fax: +54-3327 45 3190

Australia
GRUNDFOS Pumps Pty. Ltd.
P.O. Box 2040
Regency Park
South Australia 5942
Tel.: +61-8-8461-4611
Fax: +61-8-8340-0155

Austria
GRUNDFOS Pumpen Vertrieb Ges.m.b.H.
Grundfosstraße 2
A-5082 Grödig/Salzburg
Tel.: +43-6246-883-0
Fax: +43-6246-883-30

Belgium
N.V. GRUNDFOS Bellux S.A.
Boomsesteenweg 81-83
B-2630 Aartselaar
Tel.: +32-3-870 7300
Fax: +32-3-870 7301

Belarus
Представительство ГРУНДФОС в Минске
220125, Минск
ул. Шафарнянская, 11, оф. 56, БЦ «Порт»
Тел.: +375 17 397 397 3
+375 17 397 397 4
Факс: +375 17 397 397 1
E-mail: minsk@grundfos.com

Bosnia and Herzegovina
GRUNDFOS Sarajevo
Zmaja od Bosne 7-7A
BiH-71000 Sarajevo
Tel.: +387 33 592 480
Fax: +387 33 590 465
www.ba.grundfos.com
E-mail: grundfos@bih.net.ba

Brazil
BOMBAS GRUNDFOS DO BRASIL
Av. Humberto de Alencar Castelo Branco, 630
CEP 09850 - 300
São Bernardo do Campo - SP
Tel.: +55-11 4393 5533
Fax: +55-11 4343 5015

Bulgaria
Grundfos Bulgaria EOOD
Slatina District
Iztochna Tangenta street no. 100
BG - 1592 Sofia
Tel.: +359 2 49 22 200
Fax: +359 2 49 22 201
E-mail: bulgaria@grundfos.bg

Canada
GRUNDFOS Canada inc.
2941 Brighton Road
Oakville, Ontario
L6H 6C9
Tel.: +1-905 829 9533
Fax: +1-905 829 9512

China
GRUNDFOS Pumps (Shanghai) Co. Ltd.
10F The Hub, No. 33 Suhong Road
Minhang District
Shanghai 201106 PRC
Tel.: +86 21 612 252 22
Fax: +86 21 612 253 33

Columbia
GRUNDFOS Colombia S.A.S.
Km 1.5 vía Siberia-Cota Conj. Potrero Chico,
Parque Empresarial Arcos de Cota Bod. 1A.
Cota, Cundinamarca
Tel.: +57(1)-2913444
Fax: +57(1)-8764586

Croatia
GRUNDFOS CROATIA d.o.o.
Buzinski prilaz 38, Buzin
HR-10010 Zagreb
Tel.: +385 1 6595 400
Fax: +385 1 6595 499
www.hr.grundfos.com

Czech Republic
GRUNDFOS Sales Czechia and Slovakia s.r.o.
Čajkovského 21
779 00 Olomouc
Tel.: +420-585-716 111

Denmark
GRUNDFOS DK A/S
Martin Bachs Vej 3
DK-8850 Bjerringbro
Tel.: +45-87 50 50 50
Fax: +45-87 50 51 51
E-mail: info_GDK@grundfos.com
www.grundfos.com/DK

Estonia
GRUNDFOS Pumps Eesti OÜ
Peterburi tee 92G
11415 Tallinn
Tel.: + 372 606 1690
Fax: + 372 606 1691

Finland
OY GRUNDFOS Pumput AB
Trukkikuja 1
FI-01360 Vantaa
Tel.: +358-(0) 207 889 500

France
Pompes GRUNDFOS Distribution S.A.
Parc d'Activités de Chesnes
57, rue de Malacombe
F-38290 St. Quentin Fallavier (Lyon)
Tel.: +33-4 74 82 15 15
Fax: +33-4 74 94 10 51

Germany
GRUNDFOS GMBH
Schlüterstr. 33
40699 Erkrath
Tel.: +49-(0) 211 929 69-0
Fax: +49-(0) 211 929 69-3799
E-mail: infoservice@grundfos.de
Service in Deutschland:
kundendienst@grundfos.de

Greece
GRUNDFOS Hellas A.E.B.E.
20th km. Athinon-Markopoulou Av.
P.O. Box 71
GR-19002 Peania
Tel.: +0030-210-66 83 400
Fax: +0030-210-66 46 273

Hong Kong
GRUNDFOS Pumps (Hong Kong) Ltd.
Unit 1, Ground floor, Siu Wai industrial Centre
29-33 Wing Hong Street & 68 King Lam Street, Cheung Sha Wan
Kowloon
Tel.: +852-27861706 / 27861741
Fax: +852-27858664

Hungary
GRUNDFOS Hungária Kft.
Tópark u. 8
H-2045 Törökbálint
Tel.: +36-23 511 110
Fax: +36-23 511 111

India
GRUNDFOS Pumps india Private Limited
118 Old Mahabalipuram Road
Thoraipakkam
Chennai 600 097
Tel.: +91-44 2496 6800

Indonesia
PT GRUNDFOS Pompa
Graha intirub Lt. 2 & 3
Jln. Cililitan Besar No.454. Makasar, Jakarta Timur
ID-Jakarta 13650
Tel.: +62 21-469-51900
Fax: +62 21-460 6910 / 460 6901

Ireland
GRUNDFOS (Ireland) Ltd.
Unit A, Merrywell Business Park
Ballymount Road Lower
Dublin 12
Tel.: +353-1-4089 800
Fax: +353-1-4089 830

Italy
GRUNDFOS Pompe Italia S.r.l.
Via Gran Sasso 4
I-20060 Truccazzano (Milano)
Tel.: +39-02-95838112
Fax: +39-02-95309290 / 95838461

Japan
GRUNDFOS Pumps K.K.
1-2-3, Shin-Miyakoda, Kita-ku
Hamamatsu
431-2103 Japan
Tel.: +81 53 428 4760
Fax: +81 53 428 5005

Korea
GRUNDFOS Pumps Korea Ltd.
6th Floor, Aju Building 679-5
Yeoksam-dong, Kangnam-ku, 135-916
Seoul, Korea
Tel.: +82-2-5317 600
Fax: +82-2-5633 725

Latvia
SIA GRUNDFOS Pumps Latvia
Deglava biznesa centrs
Augusta Deglava ielā 60
LV-1035, Rīga,
Tel.: + 371 714 9640, 7 149 641
Fax: + 371 914 9646

Lithuania
GRUNDFOS Pumps UAB
Smolensko g. 6
LT-03201 Vilnius
Tel.: + 370 52 395 430
Fax: + 370 52 395 431

Malaysia
GRUNDFOS Pumps Sdn. Bhd.
7 Jalan Peguam U1/25
Glenmarie industrial Park
40150 Shah Alam, Selangor
Tel.: +60-3-5569 2922
Fax: +60-3-5569 2866

Mexico
Bombas GRUNDFOS de México S.A. de C.V.
Boulevard TLC No. 15
Parque industrial Stiva Aeropuerto
Apodaca, N.L. 66600
Tel.: +52-81-8144 4000
Fax: +52-81-8144 4010

Netherlands
GRUNDFOS Netherlands
Veluwezoom 35
1326 AE Almere
Postbus 22015
1302 CA ALMERE
Tel.: +31-88-478 6336
Fax: +31-88-478 6332
E-mail: info_gnl@grundfos.com

New Zealand
GRUNDFOS Pumps NZ Ltd.
17 Beatrice Tinsley Crescent
North Harbour Industrial Estate
Albany, Auckland
Tel.: +64-9-415 3240
Fax: +64-9-415 3250

Norway
GRUNDFOS Pumper A/S
Strømsveien 344
Postboks 235, Leirdal
N-1011 Oslo
Tel.: +47-22 90 47 00
Fax: +47-22 32 21 50

Poland
GRUNDFOS Pompy Sp. z o.o.
ul. Klonowa 23
Baranowo k. Poznania
PL-62-081 Przeźmierowo
Tel.: (+48-61) 650 13 00
Fax: (+48-61) 650 13 50

Portugal
Bombas GRUNDFOS Portugal, S.A.
Rua Calvet de Magalhães, 241
Apartado 1079
P-2770-153 Paço de Arcos
Tel.: +351-21-440 76 00
Fax: +351-21-440 76 90

Romania
GRUNDFOS Pompe România SRL
S-PARK BUSINESS CENTER, Clădirea A2, etaj 2
Str. Tipografilor, Nr. 11-15, Sector 1, Cod 013714
Bucuresti, Romania
Tel.: 004 021 2004 100
E-mail: romania@grundfos.ro

Russia
ООО Грундфос Россия
ул. Школьная, 39-41
Москва, RU-109544, Russia
Тел. (+7) 495 564-88-00 (495) 737-30-00
Факс (+7) 495 564 8811
E-mail grundfos.moscow@grundfos.com

Serbia
Grundfos Srbija d.o.o.
Omladinskih brigada 90b
11070 Novi Beograd
Tel.: +381 11 2258 740
Fax: +381 11 2281 769
www.rs.grundfos.com

Singapore
GRUNDFOS (Singapore) Pte. Ltd.
25 Jalan Tukang
Singapore 619264
Tel.: +65-6681 9688
Faxax: +65-6681 9689

Slovakia
GRUNDFOS s.r.o.
Prievozská 4D 821 09 BRATISLAVA
Tel.: +421 2 5020 1426
sk.grundfos.com

Slovenia
GRUNDFOS LJUBLJANA, d.o.o.
Leskoškova 9e, 1122 Ljubljana
Tel.: +386 (0) 1 568 06 10
Fax: +386 (0)1 568 06 19
E-mail: tehnika-si@grundfos.com

South Africa
GRUNDFOS (PTY) LTD
16 Lascelles Drive, Meadowbrook Estate
1609 Germiston, Johannesburg
Tel.: (+27) 10 248 6000
Fax: (+27) 10 248 6002
E-mail: lgradidge@grundfos.com

Spain
Bombas GRUNDFOS España S.A.
Camino de la Fuentecilla, s/n
E-28110 Algete (Madrid)
Tel.: +34-91-848 8800
Fax: +34-91-628 0465

Sweden
GRUNDFOS AB
Box 333 (Lunnagårdsgatan 6)
431 24 Mölndal
Tel.: +46 31 332 23 000
Fax: +46 31 331 94 60

Switzerland
GRUNDFOS Pumpen AG
Bruggacherstrasse 10
CH-8117 Fällanden/ZH
Tel.: +41-44-806 8111
Fax: +41-44-806 8115

Taiwan
GRUNDFOS Pumps (Taiwan) Ltd.
7 Floor, 219 Min-Chuan Road
Taichung, Taiwan, R.O.C.
Tel.: +886-4-2305 0868
Fax: +886-4-2305 0878

Thailand
GRUNDFOS (Thailand) Ltd.
92 Chaloem Phrakiat Rama 9 Road
Dokmai, Pravej, Bangkok 10250
Tel.: +66-2-725 8999
Fax: +66-2-725 8998

Turkey
GRUNDFOS POMPA San. ve Tic. Ltd. Sti.
Gebze Organize Sanayi Bölgesi
Ihsan dede Caddesi
2. yol 200. Sokak No. 204
41490 Gebze/ Kocaeli
Tel.: +90 - 262-679 7979
Fax: +90 - 262-679 7905
E-mail: satis@grundfos.com

Ukraine
Бізнес Центр Європа
Столичне шосе, 103
м. Київ, 03131, Україна
Tel.: (+38 044) 237 04 00
Fax: (+38 044) 237 04 01
E-mail: ukraine@grundfos.com

United Arab Emirates
GRUNDFOS Gulf Distribution
P.O. Box 16768
Jebel Ali Free Zone, Dubai
Tel.: +971 4 8815 166
Fax: +971 4 8815 136

United Kingdom
GRUNDFOS Pumps Ltd.
Grovebury Road
Leighton Buzzard/Beds. LU7 4TL
Tel.: +44-1525-850000
Fax: +44-1525-850011

U.S.A.
GRUNDFOS Water Utility Headquarters
856 Koomey Road
Brookshire, Texas 77423 USA

Uzbekistan
Grundfos Tashkent, Uzbekistan
The Representative Office of Grundfos Kazakhstan in Uzbekistan
38a, Oybek street, Tashkent
Tel.: (+998) 71 150 3290 / 71 150 3291
Fax: (+998) 71 150 3292

© 2021 Grundfos Holding A/S, all rights reserved.

Trademarks displayed in this material, including but not limited to Grundfos, the Grundfos logo and "be think innovate" are registered trademarks owned by The Grundfos Group. All rights reserved.

99207465 **08.2021**

ECM: 1309533

GRUNDFOS