KPC, KPC 24/7

Installation and operating instructions

GRUNDFOS

KPC, KPC 24/7

English (GB)

Installation and operating instructions 4

Original installation and operating instructions

Table of contents

1. General information 4
1.1 Hazard statements 4
1.2 Notes 5

2. Product introduction 5
2.1 Product description 5
2.2 Intended use 5
2.3 Pumped liquids 5

3. Installing the product 6
3.1 Location 6
3.2 Mechanical installation 7
3.3 Electrical connection 8

4. Startup 9
4.1 Manual operation 9
4.2 Automatic operation with float switch. 9
4.3 Thermal protection 9

5. Servicing the product 9
5.1 Maintaining the product 9

6. Fault finding 10
6.1 The pump does not run 10
6.2 The pump stops after a short time of operation (the thermal switch has tripped). . 10
6.3 The pump runs but gives insufficient water 10
6.4 The pump runs but gives no water 10

7. Technical data 11
7.1 Operating conditions 11
7.2 Electrical data 11
7.3 Mechanical data. 11

8. Disposing of the product 12

9. Document quality feedback 12

1. General information

This appliance shall not be used by children.

Children shall not play with the appliance.

Cleaning and user maintenance shall not be carried out by children.

Appliances can be used by persons with reduced physical, sensory, or mental capabilities, as well as persons with a lack of experience and knowledge. This requires that they are given supervision or instruction concerning the use of the appliance in a safe way and that they understand the hazards involved.

Read this document before you install the product. Installation and operation must comply with local regulations and accepted codes of good practice.

1.1 Hazard statements

The symbols and hazard statements below may appear in Grundfos installation and operating instructions, safety instructions and service instructions.

DANGER

Indicates a hazardous situation which, if not avoided, will result in death or serious personal injury.

WARNING

Indicates a hazardous situation which, if not avoided, could result in death or serious personal injury.

CAUTION

Indicates a hazardous situation which, if not avoided, could result in minor or moderate personal injury.

The hazard statements are structured in the following way:

SIGNAL WORD

Description of the hazard

Consequence of ignoring the warning

- Action to avoid the hazard.

1.2 Notes

The symbols and notes below may appear in Grundfos installation and operating instructions, safety instructions and service instructions.

Observe these instructions for explosion-proof products.

A blue or grey circle with a white graphical symbol indicates that an action must be taken.

A red or grey circle with a diagonal bar, possibly with a black graphical symbol, indicates that an action must not be taken or must be stopped.

If these instructions are not observed, it may result in malfunction or damage to the equipment.

Tips and advice that make the work easier.

2. Product introduction

2.1 Product description

The KPC pump series are of the submersible type and designed and built to pump grey, fibre-free wastewater, mainly in permanent installations for domestic use. Thanks to their compact shape and easy-to-handle design, the KPC pumps are suitable for portable use in emergency situations,

2.2 Intended use

2.2.1 KPC series

The KPC pumps are designed for manual or automatic operation, for draining cellars and garages exposed to flooding, for pumping away wastewater from drains, rainwater traps, gutters, etc.

The KPC pumps are suitable for portable use in emergency situations, such as for drawing water from tanks or rivers, for draining swimming pools, fountains, excavations or underpasses.

The pumps are also suitable for gardening and hobby use in general.

The float switch allows permanent installation and guarantees automatic pump operation.

2.2.2 KPC 24/7 series

The KPC 24/7 pump series is designed mainly for continuous operation in permanent installations for circulating water in ponds and for supplying water to fountains and water falls.

The KPC 24/7 pumps are suitable for portable use in emergency situations, such as for drawing water from tanks or rivers, for draining swimming pools, fountains, excavations or underpasses.

The pumps are also suitable for gardening and hobby use in general.

The KPC 24/7 pumps are not equipped with float switch.

2.3 Pumped liquids

The KPC pumps are designed for pumping rainwater and grey wastewater without fibres.

The pumps are not suitable for these liquids:

- liquids containing long fibres
- inflammable liquids, such as oil and petrol
- aggressive liquids.

3. Installing the product

Observe local regulations setting limits for manual lifting or handling.

CAUTION
Crushing of feet
Minor or moderate personal injury

- Use safety shoes when handling the pump.

A product that is not indicated to be protected against freezing shall not be left outside in freezing weather conditions.

3.1 Location

The pump can be installed in a well or pond for permanent or portable use in vertical position.

Make sure that there are minimum 3 m free cable above the liquid level. This limits the maximum installation depth to 7 m for pumps with a 10 m cable and to 2 m for pumps with a 5 m cable.

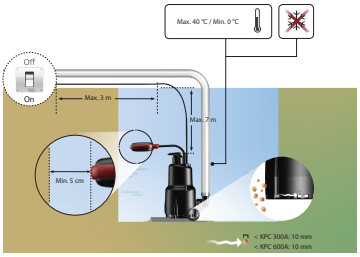

TM068029

Location of KPC pump

3.1.1 Minimum space for the float switch

The pumps require 5 cm free space between the float switch and the wall. The free space ensures free movability of the float switch.

KPC 300 A

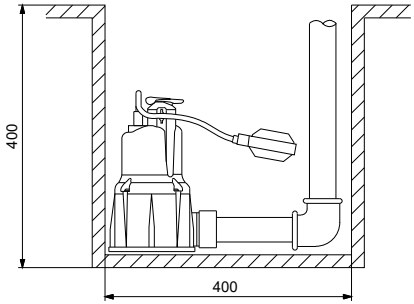

TM029100

Minimum pit dimensions for KPC 300 A

KPC 600 A

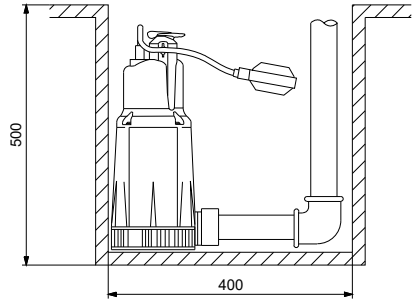

TM029101

Minimum pit dimensions for KPC 600 A

3.2 Mechanical installation

3.2.1 Foundation

Place the pump on a plate or on bricks so that the inlet strainer is free of silt, mud or similar materials.

3.2.2 Lifting the product

Lift the pump by the lifting handle. Never lift the pump by the power cable. Tie a rope to the lifting handle instead.

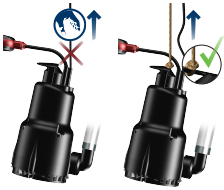

TM068030

Lifting the pump

3.2.3 Positioning the product

The pump can be tilted up to 15° from vertical position.

During operation, the pump must be covered by the pumped liquid to ensure efficient cooling.

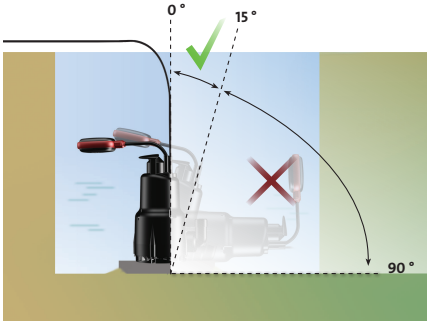

TM068031

Positioning

3.2.4 Connecting the outlet pipe

The outlet pipe can be connected to the pump outlet port by means of the 90° adapter.

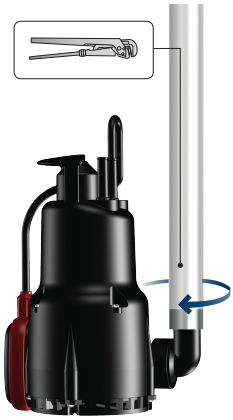

TM068033

Connecting the outlet pipe

Outlet port threads

Pump	Thread
KPC 24/7	Rp 1
KPC 300 A	
KPC 600 A	Rp 1 1/4

3.3 Electrical connection

Carry out the electrical connection according to local regulations.

DANGER
Electric shock
Death or serious personal injury

- Switch off the power supply before you start any work on the product. Make sure that the power supply cannot be switched on accidentally.

DANGER
Electric shock
Death or serious personal injury

- Connect pumps without plug permanently to the fixed wiring via an external main switch with a minimum contact gap of 3 mm in all poles.

DANGER
Electric shock
Death or serious personal injury

- The pump must be earthed.
- The protective earth (PE) of the power outlet must be connected to the protective earth of the pump. The plug must have the same protective earth (PE) connection system as the power outlet. If not, use a suitable adapter if allowed by local regulations.

DANGER
Electric shock
Death or serious personal injury

- The installation must be fitted with a residual-current device (RCD) with a tripping current less than 30 mA.

DANGER
Electric shock
Death or serious personal injury

- If the pump is used for cleaning or other maintenance of swimming pools, garden ponds or similar places, make sure that the pump is supplied through a residual-current circuit breaker with a rated residual operating current of 30 mA.

DANGER
Electric shock
Death or serious personal injury

- Power cables without a plug must be connected to a supply disconnecting device incorporated in the fixed wiring according to the local wiring rules.
- If the power cable is damaged, it must be replaced by the manufacturer, the manufacturer's service partner or a similarly qualified person.

1. Ensure that the supply voltage and frequency of the installation site correspond to the values stated on the nameplate.
2. Ensure that it is possible to make a good earth connection.
3.

Option	Description
Pumps with a plug	Connect the plug to the power outlet.
Pumps without a plug	Connect the pump permanently to the fixed wiring.

4. Startup

WARNING
Flammable material
Death or serious personal injury

- Do not use the pump for flammable liquids, such as diesel oil, petrol or similar liquids.

DANGER
Electric shock
Death or serious personal injury

- Do not use the pump in swimming pools, garden ponds or similar places if there are people in the water.

4.1 Manual operation

Start and stop the pump via an external main switch. To eliminate the risk of dry running, check the water level regularly during operation. This can for instance be done by means of an external level controller.

In order for the pump to be able to self-prime when started, the water level must be at least 25 mm.

When the pump sucks water, it can pump down to 20 mm water level.

4.2 Automatic operation with float switch

During automatic operation, pumps with a float switch will start and stop, depending on the water level and the float switch position and cable length.

4.2.1 Forced pump operation

If the pump is used to drain water below the stop level of the float switch, the float switch can be kept in a higher position by fixing it to the outlet pipe.

During forced pump operation, check the water level regularly to prevent dry running.

4.3 Thermal protection

If the pump is running without water, or if it is otherwise overloaded, the built-in thermal switch will cut out.

When the motor has cooled to normal temperature, it restarts automatically.

Related information

6.2 The pump stops after a short time of operation (the thermal switch has tripped)

5. Servicing the product

5.1 Maintaining the product

Under normal operating conditions, the pump is maintenance-free.

If the pump has been used for liquids other than clean water, it must be flushed through with clean water immediately after use.

DANGER
Electric shock
Death or serious personal injury

- Switch off the power supply before you start any work on the product. Make sure that the power supply cannot be switched on accidentally.

DANGER
Electric shock
Death or serious personal injury

- If the power cable is damaged, it must be replaced by the manufacturer, the manufacturer's service partner or a similarly qualified person.

Service must only be performed by trained service staff.

6. Fault finding

DANGER
Electric shock
Death or serious personal injury
- Switch off the power supply before you start any work on the product. Make sure that the power supply cannot be switched on accidentally.

6.1 The pump does not run

The pump does not run.

Cause	Remedy
The power supply is switched off.	Switch on the power supply.
The fuses in the installation are blown.	Replace the defective fuses.
The pump thermal switch has tripped.	The thermal switch restarts the pump when the motor has cooled down to normal temperature.

6.2 The pump stops after a short time of operation (the thermal switch has tripped)

The pump stops after a short time of operation (the thermal switch has tripped).

Cause	Remedy
The temperature of the pumped liquid is higher than that stated in the section on thermal protection. The motor is overheated.	The pump starts automatically after sufficient cooling.
The pump is partly or fully blocked by impurities.	Clean the pump.
The water level is too low when the pump is started. The pump cannot self-prime. See sections on technical data.	Move the pump to a position with higher water level, or add water until the pump starts sucking.

Related information

4.3 Thermal protection

6.3 The pump runs but gives insufficient water

The pump runs but gives insufficient water.

Cause	Remedy
The pump is partly blocked by impurities.	Clean the pump.
The outlet pipe or hose is partly blocked by impurities. The hose may be sharply bent.	Check and clean the non-return valve, if fitted. Straighten out the hose.

6.4 The pump runs but gives no water

The pump runs but gives no water.

Cause	Remedy
The pump is blocked by impurities.	Clean the pump.
The non-return valve in the outlet pipe or hose is blocked in closed position or blocked by impurities. The hose may be sharply bent.	Check the non-return valve. Clean or replace the valve, if necessary. Straighten out the hose.
Pumps with float switch: The pump does not stop because the free cable length of the float switch is too long.	Reduce the free cable length.

7. Technical data

7.1 Operating conditions

7.1.1 Flow rate

Pump type	Max. head [m]	Max. flow rate [m³/h]
KPC 24/7 210	6.5	10
KPC 24/7 270	6.5	12
KPC 300 A	6.5	12
KPC 600 A	10.2	16

7.1.2 Temperature

Max. ambient temperature	40 °C
Liquid temperature	0-35 °C
Operating temperature	0-35 °C
Storage temperature	-10 to +50 °C

7.1.3 Pumped liquid requirements

Pumped liquid	Grey wastewater without fibres
pH range	4-9 pH

Maximum particle size through the inlet strainer

Pump type	Particle size [mm]
KPC 24/7 210	5
KPC 24/7 270	10
KPC 300 A	10
KPC 600 A	10

7.1.4 Inlet level and installation depth

Pump type	Min. inlet level [mm]
KPC 24/7 210	8
KPC 24/7 270	30
KPC 300 A	85
KPC 600 A	175

Max. installation depth	7 m
Cable length	10 m

7.2 Electrical data

Pump type	Voltage [V]	P_1 Max. [kW]	P_2 [kW]	P_2 [hp]	$I_{1/1}$ [A]
KPC 300 A	1 × 220-240	0.35	0.22	0.3	1.5
KPC 600 A	1 × 220-240	0.80	0.55	0.75	3.4
KPC 24/7 210	1 × 220-240	0.35	0.22	0.3	1.5
KPC 24/7 270	1 × 220-240	0.35	0.22	0.3	1.5

Pump type	Cable type	Insulation class
KPC 300 A	H05RN-F 3G0.75	F
KPC 600 A	H07RN-F 3G1	F
KPC 24/7 210	H05RN-F 3G0.75	F
KPC 24/7 270	H05RN-F 3G0.75	F

Pump type	Capacitor	
	[µF]	[Vc]
KPC 300 A	8	450
KPC 600 A	14	450
KPC 24/7 210	8	450
KPC 24/7 270	8	450

7.3 Mechanical data

Max. dry-running time	1 minute
Enclosure class	IP68

8. Disposing of the product

This product or parts of it must be disposed of in an environmentally sound way.

1. Use the public or private waste collection service.
2. If this is not possible, contact the nearest Grundfos company or service workshop.

	The crossed-out wheelie bin symbol on a product means that it must be disposed of separately from household waste. When a product marked with this symbol reaches its end of life, take it to a collection point designated by the local waste disposal authorities. The separate collection and recycling of such products will help protect the environment and human health.

See also end-of-life information at *www.grundfos.com/product-recycling*.

9. Document quality feedback

To provide feedback about this document, scan the QR code using your phone's camera or a QR code app.

FEEDBACK99259616

Click here to submit your feedback

Argentina
Bombas GRUNDFOS de Argentina S.A.
Ruta Panamericana km. 37.500industin
1619 - Garín Pcia. de B.A.
Tel.: +54-3327 414 444
Fax: +54-3327 45 3190

Australia
GRUNDFOS Pumps Pty. Ltd.
P.O. Box 2040
Regency Park
South Australia 5942
Tel.: +61-8-8461-4611
Fax: +61-8-8340-0155

Austria
GRUNDFOS Pumpen Vertrieb
Ges.m.b.H.
Grundfosstraße 2
A-5082 Grödig/Salzburg
Tel.: +43-6246-883-0
Fax: +43-6246-883-30

Belgium
N.V. GRUNDFOS Bellux S.A.
Boomsesteenweg 81-83
B-2630 Aartselaar
Tel.: +32-3-870 7300
Fax: +32-3-870 7301

Bosnia and Herzegovina
GRUNDFOS Sarajevo
Zmaja od Bosne 7-7A
BiH-71000 Sarajevo
Tel.: +387 33 592 480
Fax: +387 33 590 465
www.ba.grundfos.com
E-mail: grundfos@bih.net.ba

Brazil
BOMBAS GRUNDFOS DO BRASIL
Av. Humberto de Alencar Castelo
Branco, 630
CEP 09850 - 300
São Bernardo do Campo - SP
Tel.: +55-11 4393 5533
Fax: +55-11 4343 5015

Bulgaria
Grundfos Bulgaria EOOD
Slatina District
Iztochna Tangenta street no. 100
BG - 1592 Sofia
Tel.: +359 2 49 22 200
Fax: +359 2 49 22 201
E-mail: bulgaria@grundfos.bg

Canada
GRUNDFOS Canada inc.
2941 Brighton Road
Oakville, Ontario
L6H 6C9
Tel.: +1-905 829 9533
Fax: +1-905 829 9512

China
GRUNDFOS Pumps (Shanghai) Co. Ltd.
10F The Hub, No. 33 Suhong Road
Minhang District
Shanghai 201106 PRC
Tel.: +86 21 612 252 22
Fax: +86 21 612 253 33

Colombia
GRUNDFOS Colombia S.A.S.
Km 1.5 vía Siberia-Cota Conj. Potrero
Chico,
Parque Empresarial Arcos de Cota Bod.
1A.
Cota, Cundinamarca
Tel.: +57(1)-2913444
Fax: +57(1)-8764586

Croatia
GRUNDFOS CROATIA d.o.o.
Buzinski prilaz 38, Buzin
HR-10010 Zagreb
Tel.: +385 1 6595 400
Fax: +385 1 6595 499
www.hr.grundfos.com

Czech Republic
GRUNDFOS Sales Czechia and Slovakia
s.r.o.
Čajkovského 21
779 00 Olomouc
Tel.: +420-585-716 111

Denmark
GRUNDFOS DK A/S
Martin Bachs Vej 3
DK-8850 Bjerringbro
Tel.: +45-87 50 50 50
Fax: +45-87 50 51 51
E-mail: info_GDK@grundfos.com
www.grundfos.com/DK

Estonia
GRUNDFOS Pumps Eesti OÜ
Peterburi tee 92G
11415 Tallinn
Tel.: + 372 606 1690
Fax: + 372 606 1691

Finland
OY GRUNDFOS Pumput AB
Trukkikuja 1
FI-01360 Vantaa
Tel.: +358-(0) 207 889 500

France
Pompes GRUNDFOS Distribution S.A.
Parc d'Activités de Chesnes
57, rue de Malacombe
F-38290 St. Quentin Fallavier (Lyon)
Tel.: +33-4 74 82 15 15
Fax: +33-4 74 94 10 51

Germany
GRUNDFOS GMBH
Schlüterstr. 33
40699 Erkrath
Tel.: +49-(0) 211 929 69-0
Fax: +49-(0) 211 929 69-3799
E-mail: infoservice@grundfos.de
Service in Deutschland:
kundendienst@grundfos.de

Greece
GRUNDFOS Hellas A.E.B.E.
20th km. Athinon-Markopoulou Av.
P.O. Box 71
GR-19002 Peania
Tel.: +0030-210-66 83 400
Fax: +0030-210-66 46 273

Hong Kong
GRUNDFOS Pumps (Hong Kong) Ltd.
Unit 1, Ground floor, Siu Wai industrial
Centre
29-33 Wing Hong Street & 68 King Lam
Street, Cheung Sha Wan
Kowloon
Tel.: +852-27861706 / 27861741
Fax: +852-27858664

Hungary
GRUNDFOS South East Europe Kft.
Tópark u. 8
H-2045 Törökbálint
Tel.: +36-23 511 110
Fax: +36-23 511 111

India
GRUNDFOS Pumps India Private
Limited
118 Old Mahabalipuram Road
Thoraipakkam
Chennai 600 097
Tel.: +91-44 2496 6800

Indonesia
PT GRUNDFOS Pompa
Graha intirub Lt. 2 & 3
Jln. Cililitan Besar No.454. Makasar,
Jakarta Timur
ID-Jakarta 13650
Tel.: +62 21-469-51900
Fax: +62 21-460 6910 / 460 6901

Ireland
GRUNDFOS (Ireland) Ltd.
Unit A, Merrywell Business Park
Ballymount Road Lower
Dublin 12
Tel.: +353-1-4089 800
Fax: +353-1-4089 830

Italy
GRUNDFOS Pompe Italia S.r.l.
Via Gran Sasso 4
I-20060 Truccazzano (Milano)
Tel.: +39-02-95838112
Fax: +39-02-95309290 / 95838461

Japan
GRUNDFOS Pumps K.K.
1-2-3, Shin-Miyakoda, Kita-ku
Hamamatsu
431-2103 Japan
Tel.: +81 53 428 4760
Fax: +81 53 428 5005

Kazakhstan
Grundfos Kazakhstan LLP
7' Kyz-Zhibek Str., Kok-Tobe micr.
KZ-050020 Almaty Kazakhstan
Tel.: +7 (727) 227-98-55/56

Korea
GRUNDFOS Pumps Korea Ltd.
6th Floor, Aju Building 679-5
Yeoksam-dong, Kangnam-ku, 135-916
Seoul, Korea
Tel.: +82-2-5317 600
Fax: +82-2-5633 725

Latvia
SIA GRUNDFOS Pumps Latvia
Deglava biznesa centrs
Augusta Deglava ielā 60
LV-1035, Rīga,
Tel.: + 371 714 9640, 7 149 641
Fax: + 371 914 9646

Lithuania
GRUNDFOS Pumps UAB
Smolensko g. 6
LT-03201 Vilnius
Tel.: + 370 52 395 430
Fax: + 370 52 395 431

Malaysia
GRUNDFOS Pumps Sdn. Bhd.
7 Jalan Peguam U1/25
Glenmarie industrial Park
40150 Shah Alam, Selangor
Tel.: +60-3-5569 2922
Fax: +60-3-5569 2866

Mexico
Bombas GRUNDFOS de México
S.A. de C.V.
Boulevard TLC No. 15
Parque industrial Stiva Aeropuerto
Apodaca, N.L. 66600
Tel.: +52-81-8144 4000
Fax: +52-81-8144 4010

Netherlands
GRUNDFOS Netherlands
Veluwezoom 35
1326 AE Almere
Postbus 22015
1302 CA ALMERE
Tel.: +31-88-478 6336
Fax: +31-88-478 6332
E-mail: info_gnl@grundfos.com

New Zealand
GRUNDFOS Pumps NZ Ltd.
17 Beatrice Tinsley Crescent
North Harbour Industrial Estate
Albany, Auckland
Tel.: +64-9-415 3240
Fax: +64-9-415 3250

Norway
GRUNDFOS Pumper A/S
Strømsveien 344
Postboks 235, Leirdal
N-1011 Oslo
Tel.: +47-22 90 47 00
Fax: +47-22 32 21 50

Poland
GRUNDFOS Pompy Sp. z o.o.
ul. Klonowa 23
Baranowo k. Poznania
PL-62-081 Przeźmierowo
Tel.: (+48-61) 650 13 00
Fax: (+48-61) 650 13 50

Portugal
Bombas GRUNDFOS Portugal, S.A.
Rua Calvet de Magalhães, 241
Apartado 1079
P-2770-153 Paço de Arcos
Tel.: +351-21-440 76 00
Fax: +351-21-440 76 90

Romania
GRUNDFOS Pompe România SRL
S-PARK BUSINESS CENTER, Clădirea A2, etaj 2
Str. Tipografilor, Nr. 11-15, Sector 1, Cod 013714
Bucuresti, Romania
Tel.: 004 021 2004 100
E-mail: romania@grundfos.ro

Serbia
Grundfos Srbija d.o.o.
Omladinskih brigada 90b
11070 Novi Beograd
Tel.: +381 11 2258 740
Fax: +381 11 2281 769
www.rs.grundfos.com

Singapore
GRUNDFOS (Singapore) Pte. Ltd.
25 Jalan Tukang
Singapore 619264
Tel.: +65-6681 9688
Faxax: +65-6681 9689

Slovakia
GRUNDFOS s.r.o.
Prievozská 4D 821 09 BRATISLAVA
Tel.: +421 2 5020 1426
sk.grundfos.com

Slovenia
GRUNDFOS LJUBLJANA, d.o.o.
Leskoškova 9e, 1122 Ljubljana
Tel.: +386 (0) 1 568 06 10
Fax: +386 (0)1 568 06 19
E-mail: tehnika-si@grundfos.com

South Africa
GRUNDFOS (PTY) LTD
16 Lascelles Drive, Meadowbrook Estate
1609 Germiston, Johannesburg
Tel.: (+27) 10 248 6000
Fax: (+27) 10 248 6002
E-mail: lgradidge@grundfos.com

Spain
Bombas GRUNDFOS España S.A.
Camino de la Fuentecilla, s/n
E-28110 Algete (Madrid)
Tel.: +34-91-848 8800
Fax: +34-91-628 0465

Sweden
GRUNDFOS AB
Box 333 (Lunnagårdsgatan 6)
431 24 Mölndal
Tel.: +46 31 332 23 000
Fax: +46 31 331 94 60

Switzerland
GRUNDFOS Pumpen AG
Bruggacherstrasse 10
CH-8117 Fällanden/ZH
Tel.: +41-44-806 8111
Fax: +41-44-806 8115

Taiwan
GRUNDFOS Pumps (Taiwan) Ltd.
7 Floor, 219 Min-Chuan Road
Taichung, Taiwan, R.O.C.
Tel.: +886-4-2305 0868
Fax: +886-4-2305 0878

Thailand
GRUNDFOS (Thailand) Ltd.
92 Chaloem Phrakiat Rama 9 Road
Dokmai, Pravej, Bangkok 10250
Tel.: +66-2-725 8999
Fax: +66-2-725 8998

Turkey
GRUNDFOS POMPA San. ve Tic. Ltd. Sti.
Gebze Organize Sanayi Bölgesi
Ihsan dede Caddesi
2. yol 200. Sokak No. 204
41490 Gebze/ Kocaeli
Tel.: +90 - 262-679 7979
Fax: +90 - 262-679 7905
E-mail: satis@grundfos.com

Ukraine
ТОВ "ГРУНДФОС УКРАЇНА"
Бізнес Центр Європа
Столичне шосе, 103
м. Київ, 03131, Україна
Tel.: (+38 044) 237 04 00
Fax: (+38 044) 237 04 01
E-mail: ukraine@grundfos.com

United Arab Emirates
GRUNDFOS Gulf Distribution
P.O. Box 16768
Jebel Ali Free Zone, Dubai
Tel.: +971 4 8815 166
Fax: +971 4 8815 136

United Kingdom
GRUNDFOS Pumps Ltd.
Grovebury Road
Leighton Buzzard/Beds. LU7 4TL
Tel.: +44-1525-850000
Fax: +44-1525-850011

U.S.A.
Global Headquarters for WU
856 Koomey Road
Brookshire, Texas 77423 USA
Phone: +1-630-236-5500

Uzbekistan
Grundfos Tashkent, Uzbekistan
The Representative Office of Grundfos Kazakhstan in Uzbekistan
38a, Oybek street, Tashkent
Tel.: (+998) 71 150 3290 / 71 150 3291
Fax: (+998) 71 150 3292

Trademarks displayed in this material, including but not limited to Grundfos and the Grundfos logo, are registered trademarks owned by The Grundfos Group. © 2024 Grundfos Holding A/S, all rights reserved.

99259616 **12.2024**

ECM: 1395894