KEEP YOUR COOLING WATER CLEAN

Better cooling tower performance with effective chlorine dioxide solutions

be
think
innovate

GRUNDFOS

CHLORINE DIOXIDE SOLUTIONS FROM GRUNDFOS: EFFICIENCY AND PEACE OF MIND

TRUST GRUNDFOS CHLORINE DIOXIDE SYSTEMS TO DELIVER SAFE, RELIABLE AND ACCURATE SOLUTIONS THAT WILL HELP TO CONTROL BIOFOULING AND MAINTAIN THE CLEANLINESS OF COOLING TOWER WATER.

High cooling performance – a question of biofouling control
Maintaining high water quality is a key factor in ensuring consistently high cooling tower performance. Biofouling (contamination of cooling water by biological matter) can result in the formation of biofilm on pipes and other system components. This can lead to corrosion that wears down metal and concrete components, and it can lead to rot in cooling tower wood. Since biofilm has thermal insulation properties, it also negatively affects heat transfer.
The combination of corrosion and thermal insulation is particularly bad for the heat exchanger. If cooling water is not kept clean from biofouling, the service life and operating efficiency of this key system component will be significantly lower. The result: poor performance, high operation and maintenance costs, and more downtime because of frequent shutdowns for repairs.

Chlorine dioxide benefits
Microbiological control by disinfection is therefore a key part of cooling tower water treatment, and it can be achieved using various biocides. One of these, chlorine dioxide (ClO_2), is a broad-spectrum biocide that offers a wide range of benefits:

- Rapid action: fast-working biocide that is effective for legionella control
- Consistently effective anywhere: low sensitivity to water contamination and pH variations, does not induce resistance, and is not selective with microbiological matter
- Cost-effective: effective at low dosages, and possibility to dose by shots
- Compatible with other chemicals: compatible with corrosion inhibitors and anti-scales
- Few side reactions: does not react with hydrocarbons, or with ammonia and amines (therefore does not form chloramines which are less effective than ClO_2 and toxic for water organisms)
- Safer for the environment: very low environmental impact

Grundfos offers biofouling control solutions that utilise these benefits.

Complete cooling tower solutions from Grundfos
Grundfos offers a complete range of solutions for cooling tower systems – from energy-efficient cooling water pumps to accurate chemical dosing pumps, disinfection chemical generators, polymer preparation systems and complete measurement and control instrumentation; see page 6-7. We also offer a full range of accessories, enabling us to deliver a solution that fits all requirements.
Choosing Grundfos gives you many benefits, including the following:

- Reliability: High product quality has always been important at Grundfos. All products are individually tested before leaving the factory and come with a 2-year warranty. Extensive service and maintenance options ensure that mission-critical equipment will run reliably for years.
- Accurate dosing pumps: In chemical dosing, accuracy is paramount. Dosing too much or too little impacts the process outcome, and chemical overconsumption impacts operation costs. Grundfos dosing pumps are very accurate as well as safe, user-friendly, and reliable.
- Expertise: We have years of experience in cooling system design and operation, and we use it to your advantage. From design and specification to installation, commissioning and system optimisation, we provide know-how that adds value to your operation, and we work with you to develop a solution.

A SOLUTION FOR EVERY STEP OF THE PROCESS

Grundfos can deliver reliable, accurate, and energy-efficient solutions for every step of your cooling process.
For more information, see page 6-7, or visit www.grundfos.com.

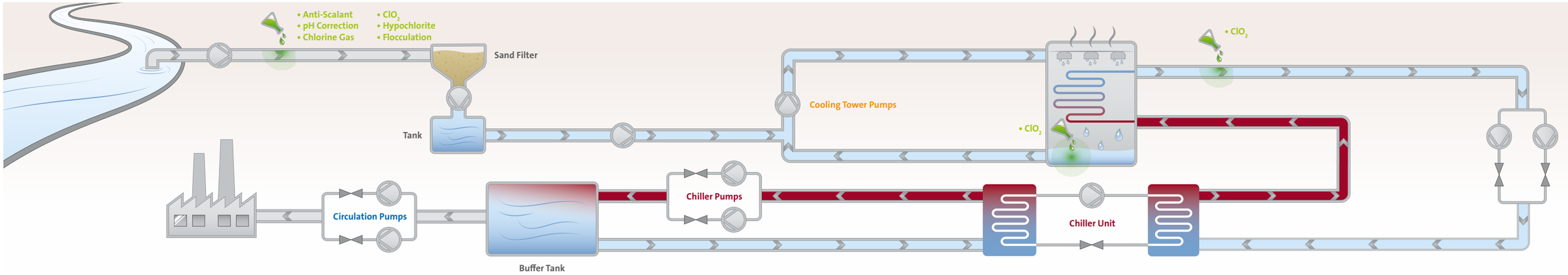

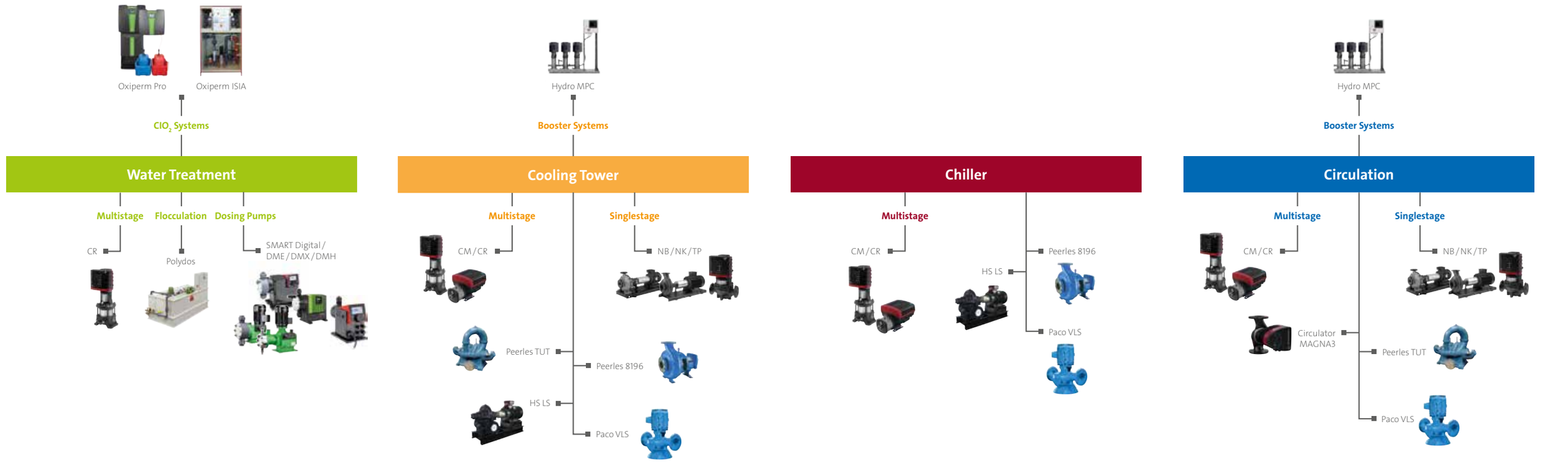

GRUNDFOS PRODUCTS IN COOLING SYSTEMS

For more Information see WT Chart

DOSING AND DISINFECTION SOLUTIONS FOR CHLORINE DIOXIDE APPLICATIONS

Grundfos dosing and disinfection products utilise the benefits of chlorine dioxide to give you effective biofouling control in cooling tower water.
For more information, go to the Grundfos Product Center (see next page), or visit www.grundfos.com.

Oxiperm® chlorine dioxide generators
The Oxiperm® Pro OCD-162 system provides compact, efficient and cost-effective disinfection and is ideal for cooling water treatment. It produces chlorine dioxide for storage or direct dosage, using diluted precursors of sodium chlorite ($NaClO_2$, 7.5 %) and hydrochloric acid (HCl, 9 %). The system is available in four capacities, producing up to 5, 10, 30 or 60 g/h of ClO_2.

- Very safe, compact system for easy installation even in confined spaces
- On-site preparation of chlorine dioxide
- Complete chemical reaction within a minimum of time
- Low operating costs and low consumption of chemicals

The Oxiperm® ISIA produces chlorine dioxide from concentrated $NaClO_2$ and HCl solutions (25 or 31%, and 31-33%, respectively). ClO_2 is produced underwater in a very small reaction chamber installed in-line. It is produced instantaneously on demand and is injected directly into the water to treat, providing high safety and very effective chemical consumption. The system is available in six different capacities, producing up to 0.5, 1, 2, 5, 10 and 20 kg/h of ClO_2. Upon request, Grundfos can supply engineered solutions producing up to 200 kg/h of ClO_2.

- Chemical reaction yield of 95-98% requiring less chemicals and generating less by-products
- Low chemical consumption: 5.7 kg HCl and 5.7 kg $NaClO_2$ per 1 kg of generated ClO_2
- Reduced transportation and chemical storage costs, and reduced investment
- Safe, lower risk: no storage tank, and no atmospheric gas leaks
- Easy installation

Polydos polymer preparation systems
Flocculation processes are used to bind suspended solids together to ease the separation of particles and water. The processes are driven by adding polymers. Polydos is a compact, customisable, and fully automatic system for preparing solutions from dry powder/granules or concentrated liquid polymers. It comes in several variants to suit your application – choose from fully automatic one, two or three chamber preparation systems or a dry material feeding system.

- Compact, yet flexible installation of fully integrated system including material handling, preparation and maturing and solution dosing
- Configured according to the required polymer quantity in kg/h
- Contactless ultra-sonic level sensor to enable flow proportional preparation
- Customisation of systems to match the application

DID compact measuring stations
The fully digital range of DID measurement and control instrumentation is available as compact systems with bypass flow cell or as kits for applications with tank-immersed sensors. Pre-assembled and pre-calibrated, they are simple to set up. Installation is easy due to Fieldbus communication with controller and sensors, and the systems are designed for long service intervals. DID systems are designed to perfectly match Grundfos dosing pumps and systems.

- Lowered pH dependency for free-chlorine sensors
- Automatic limitation of water flow and detection of missing water flow in systems with flow cell
- One pre-calibrated sensor variant per parameter with temperature compensation for all applications (pH, ORP, conductivity sensors)
- Systems for tank installation include probe carrier, cable, and probe guard

Digital and mechanical dosing pumps
Grundfos manufactures a wide range of digital and mechanical dosing pumps for all applications.

SMART Digital: The SMART Digital diaphragm dosing pumps deliver reliable, safe, and cost-effective dosing with industry-leading dosing accuracy. The pumps are very user friendly and flexible, and the advanced monitoring and self-analysis features offered by several control variants provide intelligent process control that keeps an eye on the entire system.

- Up to 200 l/h and up to 16 bar

DME: The DME Digital Dosing™ diaphragm pumps combine high precision with user-friendliness, covering large dosage rates with high-capacity turn-down.

The DME is capable of handling high-viscosity liquids (up to 3000 mPas).
- Up to 940 l/h and up to 10 bar

DMX: The DMX range of mechanical diaphragm dosing pumps features robust diaphragm-based design and high-quality motors, and requires minimum maintenance. Available with a variety of dosing head sizes, materials and accessories, the DMX range is available with EX classified or ATEX-certified motors.

- Up to 2 x 4000 l/h (double-head version) and up to 10 bar

DMH: The Grundfos DMH range of hydraulic piston diaphragm dosing pumps is highly versatile, with a wide flow range and a variety of dosing head sizes, materials and accessories. DMHs feature an integrated pressure relief valve and active diaphragm protection, and they are available with EX classified or ATEX-certified motors and an API 675 certificate.

- Up to 2 x 1500 l/h (double-head version) and up to 200 bar

GRUNDFOS PRODUCT CENTER

QUICKLY FIND THE COOLING TOWER, CHILLER OR CIRCULATION SOLUTION YOU NEED

The Grundfos Product Center is our free digital product catalogue and sizing tool, offering one-point access for all product information including pump curves, CAD drawings, instruction videos, and service manuals.

You can quickly find cooling tower, chiller or circulation solutions by searching our entire catalogue. You can search by pumped liquid or by pump sizing information, or you can browse the catalogue by pump design, application, or product family. You can also get quick pump replacement recommendations.

Signing up on the Grundfos Product Center gives you several advantages. You can save search results and entire projects for future reference. Available online and as a desktop (offline) edition, the Grundfos Product Center is optimised for viewing on mobile devices such as your smartphone or tablet.

Quickly find the solutions you need at
product-selection.grundfos.com.

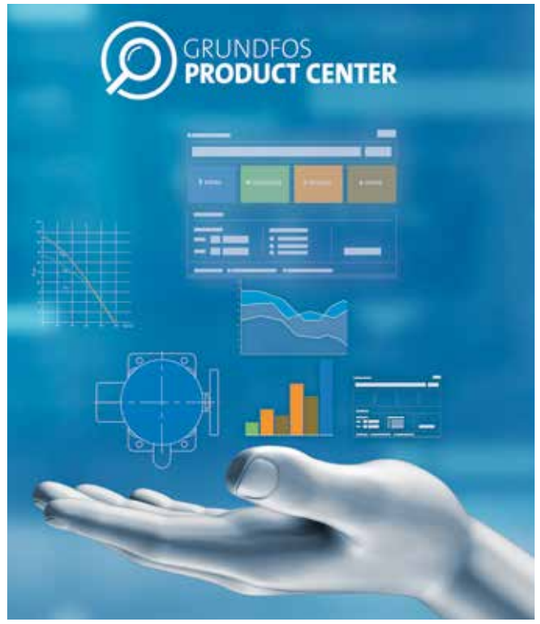

The name Grundfos, the Grundfos logo, and be think innovate are registered trademarks owned by Grundfos Holding A/S or Grundfos A/S, Denmark. All rights reserved worldwide.

9997186 /1116/EMEA/12382-BrandBox

GRUNDFOS Holding A/S
Poul Due Jensens Vej 7
DK-8850 Bjerringbro
Tel: +45 87 50 14 00
www.grundfos.com

GRUNDFOS