SCALA2

Service instructions

GRUNDFOS

SCALA2

English (GB)

Service instructions 4
Dismantling the product 27
Assembling the product 28

Original service instructions

Table of contents

1. General information . . . 4
1.1 Hazard statements . . . 4
1.2 Notes . . . 4
2. Identification . . . 5
2.1 Nameplate . . . 5
2.2 Type key . . . 5
3. SCALA2 sensor tool . . . 6
4. Lubricants . . . 6
5. Dismantling the product . . . 7
5.1 Before disassembly . . . 7
5.2 Removing the control box cover . . . 8
5.3 Removing the printed circuit board (PCB) . . . 8
5.4 Removing the power plug . . . 9
5.5 Removing the cover . . . 9
5.6 Removing the sensor and the sensor cable . . . 11
5.7 Removing the pressure tank . . . 11
5.8 Removing the chamber stack . . . 12
5.9 Removing the chamber stack and center part . . . 12
5.10 Removing the shaft seal . . . 12
5.11 Removing the center part . . . 13
5.12 Removing the shaft from the center part . . . 13
6. Assembling the product . . . 13
6.1 Before assembly . . . 13
6.2 Mounting the shaft . . . 13
6.3 Mounting the center part . . . 13
6.4 Fitting the shaft seal . . . 14
6.5 Fitting the chamber stack . . . 14
6.6 Fitting the pressure tank and the self-priming valve . . . 14
6.7 Fitting the connection part . . . 15
6.8 Installing the sensor cable and sensor . . . 16
6.9 Fitting the pump cover and nipples . . . 17
6.10 Fitting the power plug . . . 17
6.11 Mounting the printed circuit board (PCB) . . . 17
6.12 Fitting the control box cover . . . 19
7. Corrosion . . . 19
8. Megging . . . 20
9. Winding resistance . . . 20
10. Shaft seal run-in . . . 21
11. Fault finding . . . 21
11.1 Grundfos Eye operating indications . . . 21
11.2 Fault resetting . . . 21
11.3 The pump is not running . . . 22
11.4 The pump is not running, and indicator light 1 is on . . . 22
11.5 The pump is not running, and indicator light 2 is on . . . 22
11.6 The pump is not running, and indicator light 4 is on . . . 22
11.7 The pump is not running, and indicator light 3 is on . . . 22
11.8 The pump is not running, and indicator light 6 is on . . . 22
11.9 The pump is running, and indicator light 3 is on . . . 22
11.10 The pump is running, and indicator light 7 is on . . . 23
11.11 Insufficient pump performance . . . 23
11.12 Insufficient pump performance, and indicator light 7 is on . . . 23
11.13 System overpressure, and indicator light 5 is on . . . 23
11.14 After a reset, the pump runs briefly, and indicator light 4 is on . . . 24
11.15 After resetting, the pump immediately restarts, and indicator light 3 is on . . . 24
12. Exploded view . . . 25
13. Document quality feedback . . . 26

1. General information

This appliance shall not be used by children.

Children shall not play with the appliance.

Cleaning and user maintenance shall not be carried out by children.

Appliances can be used by persons with reduced physical, sensory, or mental capabilities, as well as persons with a lack of experience and knowledge. This requires that they are given supervision or instruction concerning the use of the appliance in a safe way and that they understand the hazards involved.

Read this document before you install the product. Installation and operation must comply with local regulations and accepted codes of good practice.

1.1 Hazard statements

The symbols and hazard statements below may appear in Grundfos installation and operating instructions, safety instructions and service instructions.

DANGER
Indicates a hazardous situation which, if not avoided, will result in death or serious personal injury.

WARNING
Indicates a hazardous situation which, if not avoided, could result in death or serious personal injury.

CAUTION
Indicates a hazardous situation which, if not avoided, could result in minor or moderate personal injury.

The hazard statements are structured in the following way:

SIGNAL WORD
Description of the hazard
Consequence of ignoring the warning
- Action to avoid the hazard.

1.2 Notes

The symbols and notes below may appear in Grundfos installation and operating instructions, safety instructions and service instructions.

Observe these instructions for explosion-proof products.

A blue or grey circle with a white graphical symbol indicates that an action must be taken.

A red or grey circle with a diagonal bar, possibly with a black graphical symbol, indicates that an action must not be taken or must be stopped.

If these instructions are not observed, it may result in malfunction or damage to the equipment.

Tips and advice that make the work easier.

2. Identification

2.1 Nameplate

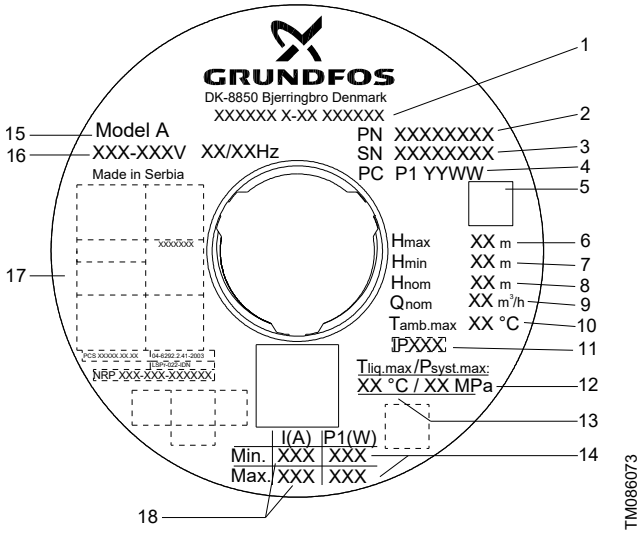

Example of nameplate

Pos.	Description
1	Type designation
2	Product number
3	Serial number
4	Production code (year and week)
5	Barcode
6	Max. head
7	Min. head
8	Rated head
9	Rated flow rate
10	Max. ambient temperature
11	Enclosure class
12	Max. operating pressure
13	Max. liquid temperature
14	Min. and max. rated power
15	Model
16	Voltage and frequency
17	Approvals
18	Min. and max. rated current

2.2 Type key

Example: SCALA2 3-45 A K C H D E

Code	Explanation	Designation
SCALA2		Type range
3		Rated flow rate [m^3/h]
45		Max. head [m]
A	Standard	Material code
K	1 × 200-240 V, 50/60 Hz	Supply voltage
M	1 × 208-230 V, 60 Hz	
V	1 × 115 V, 60 Hz	
W	1 × 100-115 V, 50/60 Hz	
C	High-efficiency motor with frequency converter	Motor
A	Cable with plug, IEC type I, AS/NZS3112, 1.5 m	Mains cable and plug
B	Cable with plug, IEC type B, NEMA 5-15P, 6.5 ft	
C	Cable with plug, IEC type E&F, CEE7/7, 1.5 m	
D	Cable without plug, 1.5 m	
G	Cable with plug, IEC type G, BS1363, 1.5 m	
H	Cable with plug, IEC type I, IRAM 2073, 1.5 m	
J	Cable with plug, NEMA 6-15P, 6.5 ft	
K	Cable with plug, IEC type B, JIS C 8302, 1.5 m	
L	Cable with plug, IEC type L, CEI 23-16/VII, 2 m	
O	Cable with plug, IEC type O, TIS 166-2549, 1.5 m	
P	Cable with plug, IEC type D/M, IS 1293, 2 m	
D	Integrated frequency converter	Controller
E	R 1" composite material	Thread
F	NPT 1" composite material	

3. SCALA2 sensor tool

Product	Product number
SCALA2 sensor tool TM088668	93355241

1) Users can also 3D print the tool themselves. Find the 3D file *here* by searching for SCALA2.

4. Lubricants

If nothing else is specified, all O-rings are to be lubricated with Rocol Sapphire Aqua-Sil.

Product	Product number
Rocol Sapphire Aqua-Sil, 1 kg	RM2924
Castrol Optimol Paste White T, 0.5 kg	V6001176
Cooling paste Dow Corning 340 55CC 5 g	93217169

5. Dismantling the product

5.1 Before disassembly

DANGER
Electric shock
Death or serious personal injury

- Switch off the power supply before you start any work on the product. Make sure that the power supply cannot be switched on accidentally.

- Disconnect the power supply to the motor.
- Remove the power cable in accordance with local regulations.
- Open a tap to release the pressure in the pipe system.
- Gradually loosen the non-return valve (65a) to release the pressure in the pump.
- Remove the drain plug (7) to drain the pump.

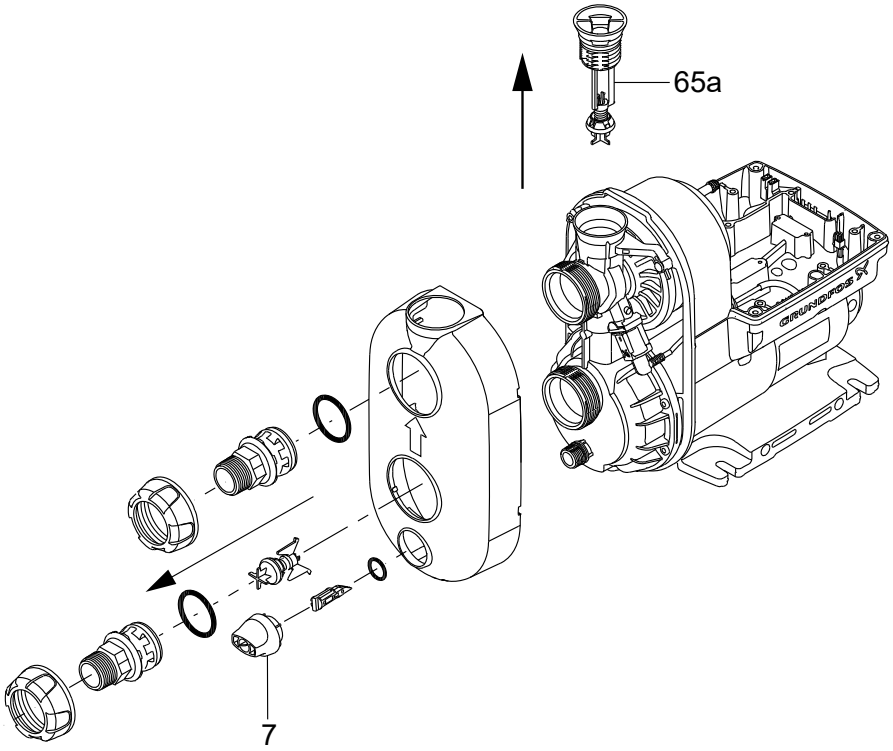

TM088573

5.2 Removing the control box cover

Always use an antistatic service kit when handling electronic components. This will prevent static electricity from damaging components.

1. Remove the six pan-head torx screws in the cover (164a).

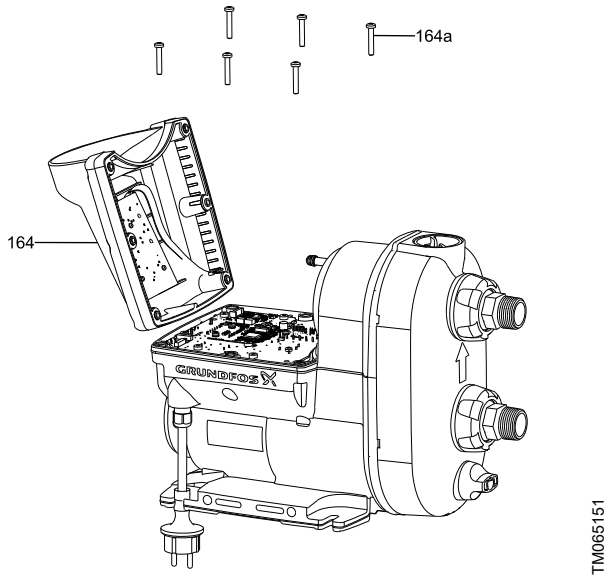

Removing the control box cover

2. Carefully lift off the control box cover and disconnect the plug for the operating panel.

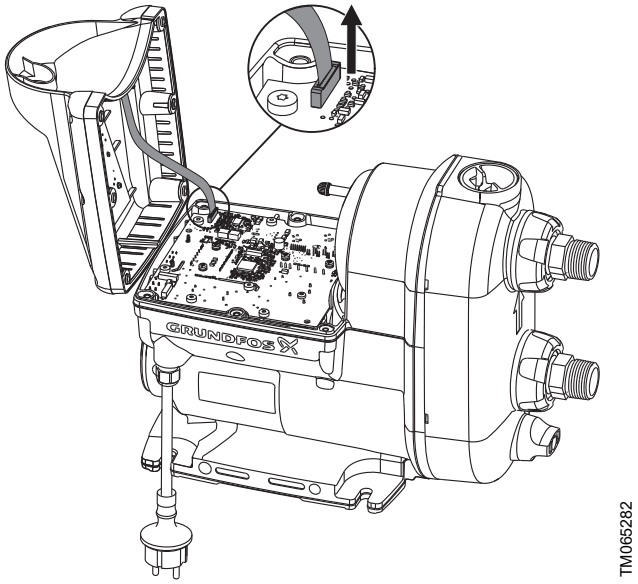

Disconnecting the plug for the operating panel

5.3 Removing the printed circuit board (PCB)

1. Loosen the screws.

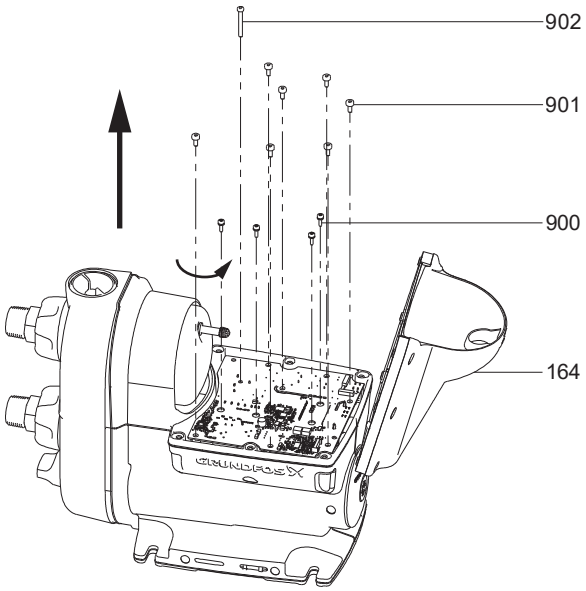

2. Use a plastic crowbar to lift the printed circuit board (PCB) (159).
3. Dismantle the power plugs (20) and the sensor cable (174a), and remove the printed circuit board (PCB).

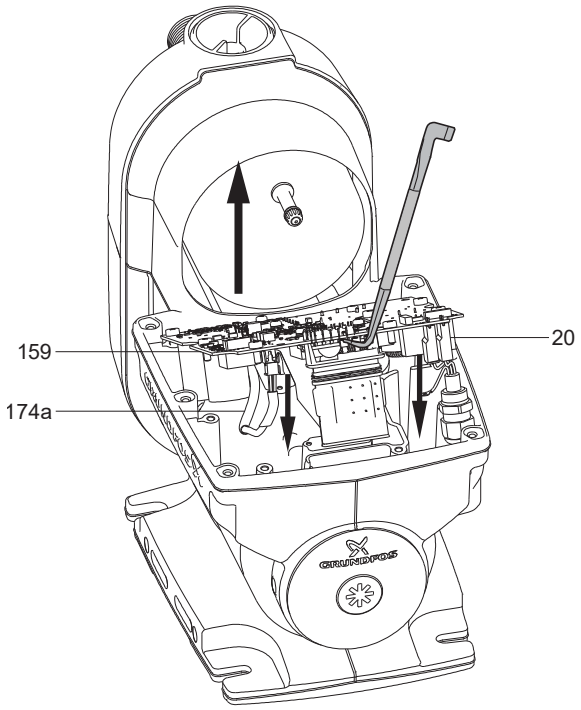

4. Wipe off the cooling paste from the surfaces with a cloth and remove the used cooling pad (166a).

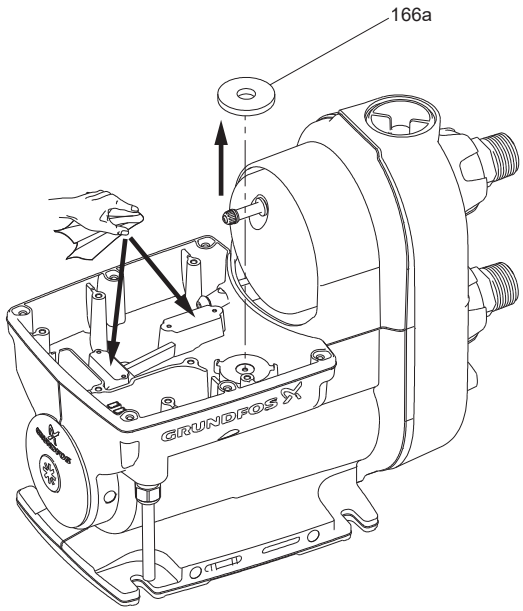

5.4 Removing the power plug

1. Loosen and remove the screw (903).
2. Unscrew the cable gland (2).
3. Pull the cable out of the cable gland (20).

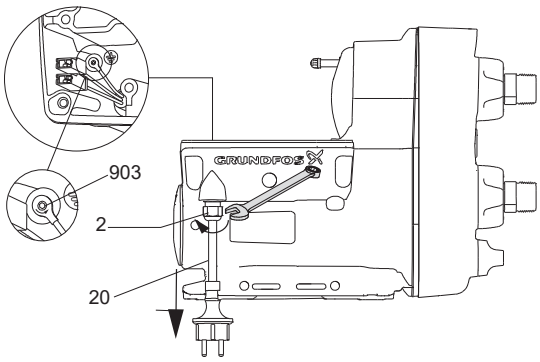

5.5 Removing the cover

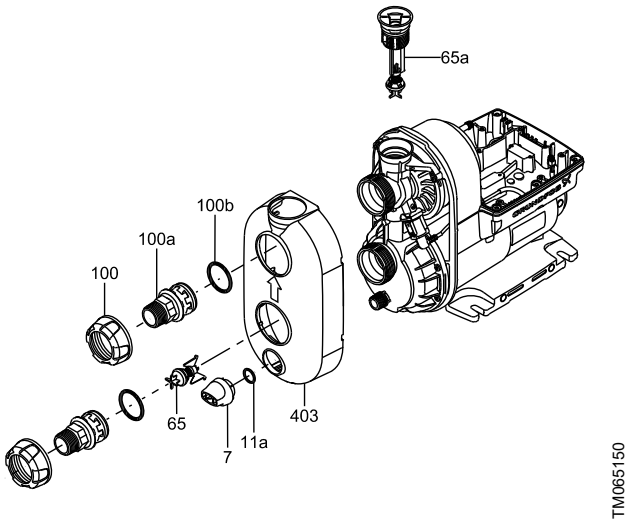

1. Slowly unscrew the non-return valve (65a) to release any pressure in the pump.
2. Remove the drain plug (7).
3. Remove the union nut (100) by turning it counterclockwise by hand.
4. Pull out the nipples (100a).
5. Pull out the non-return valve (65) from the inlet.
6. Remove the O-rings from the nipples, valves and plugs.

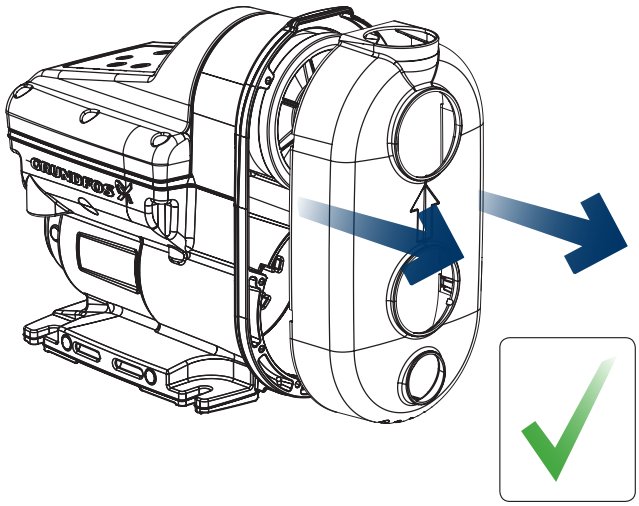

Removing the cover

7. Remove the screws (26) that hold the connection part. Note that one of the screws holds the earth connection bracket and washer.
8. Remove the connection part and the pressure tank.

9. Remove the seal ring (44a).

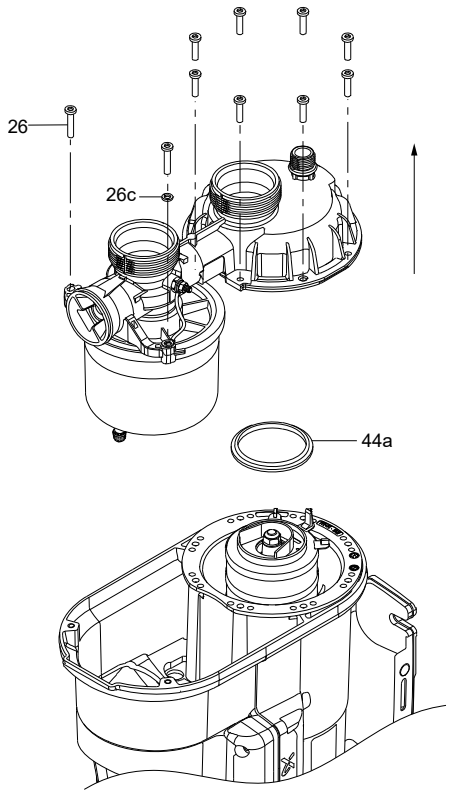

Removing the connection part

10. Remove the self-priming valve (10) and O-ring (37).

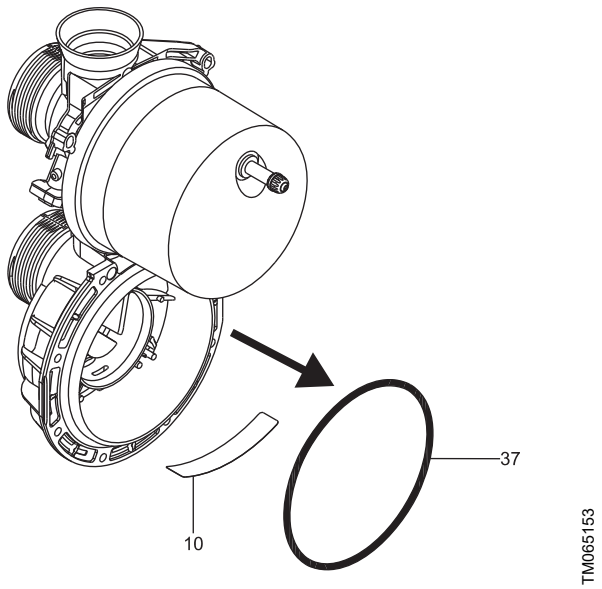

Self-priming valve and O-ring for connections part

11. Unscrew the pressure tank (42) counterclockwise and remove the gasket for the tank (42a).

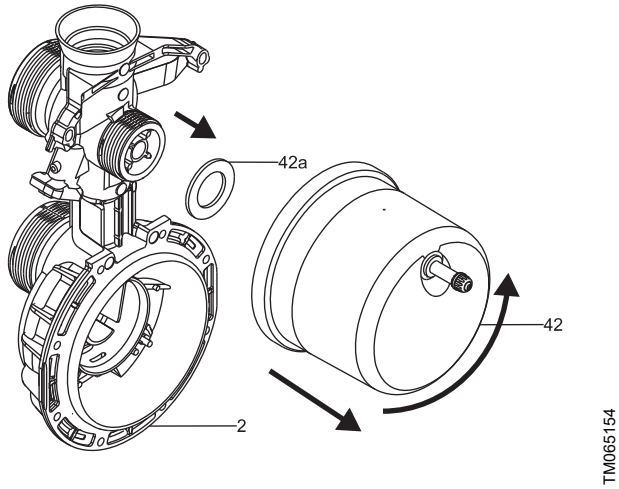

Removing the pressure tank

5.6 Removing the sensor and the sensor cable

1. Remove the retaining clip (175) for the sensor.
2. Remove the sensor (174a).

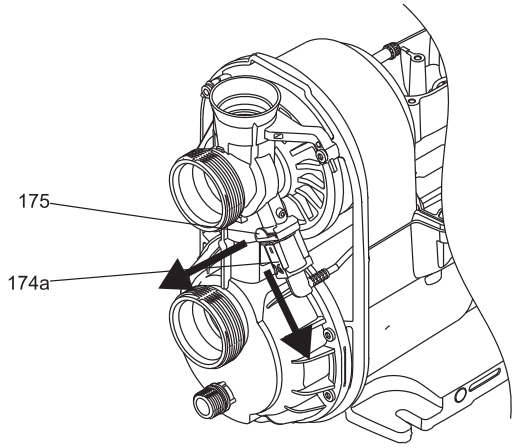

TM065152

3. Cut the cable and pull the two pieces apart.

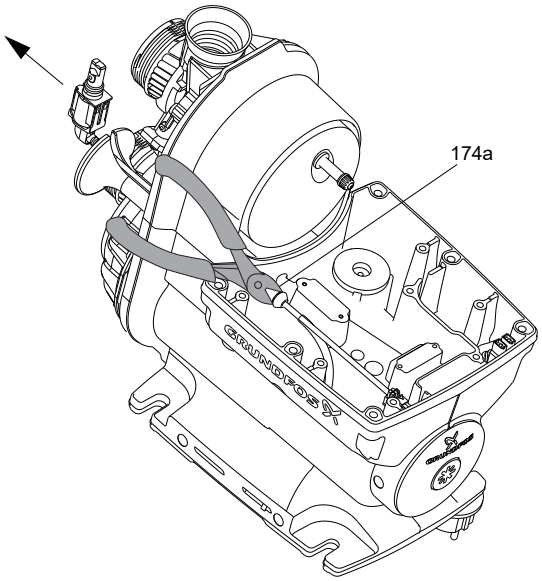

TM088163

5.7 Removing the pressure tank

1. Remove the screws (26) that hold the connection part. Note that one of the screws holds the earth connection bracket and washer.
2. Remove the connection part and the pressure tank.
3. Remove the seal ring (44a).

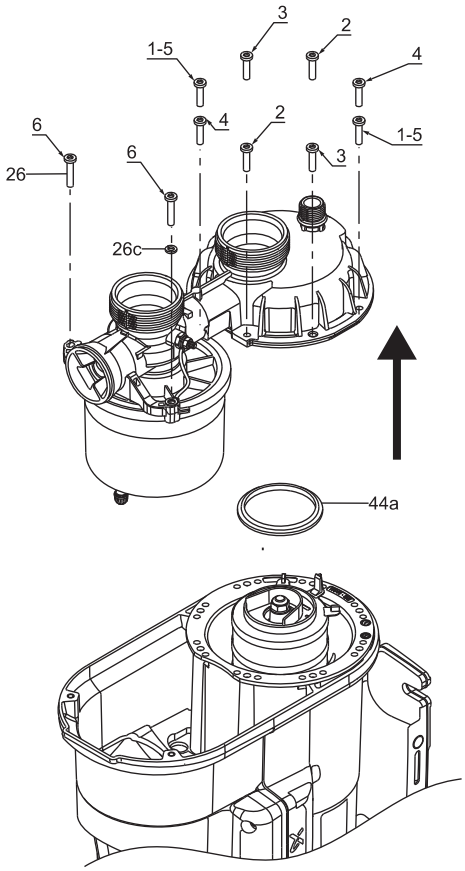

TM065149

Removing the connection part

4. Remove the self-priming valve (10) and O-ring (37).

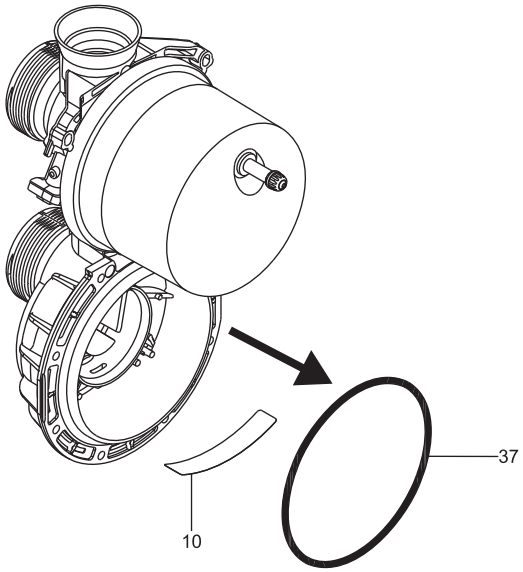

TM065153

Self-priming valve and O-ring for connections part

5. Unscrew the pressure tank (42) counterclockwise and remove the gasket for the tank (42a).

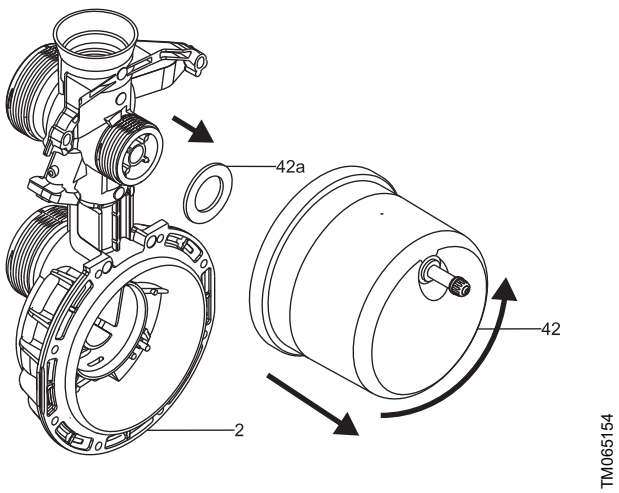

Removing the pressure tank

5.8 Removing the chamber stack

The position numbers in the following refer to the exploded drawing in the appendix Chamber stack and center part.

1. Remove the plug (169) on the nameplate to access the shaft end.
2. Remove the locking nut (67) and the washer (66). Hold the shaft with a screwdriver in the shaft end.

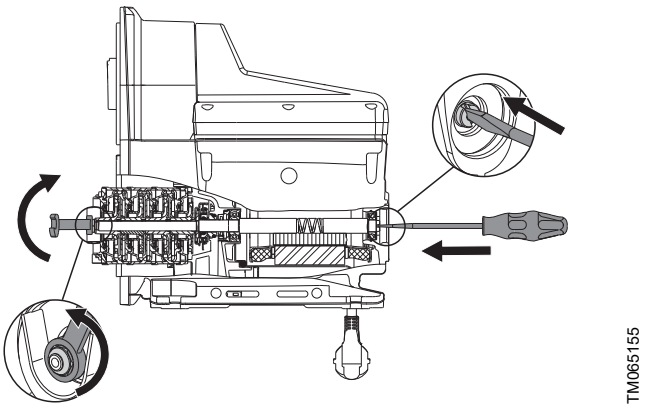

Loosening the locking nut for the chamber stack

3. Remove the chamber stack.

Related information

A.1. Chamber stack and center part

5.9 Removing the chamber stack and center part

The position numbers in the following refer to the exploded drawing in the appendix Chamber stack and center part

1. Remove the plug (169) on the nameplate to access the shaft end.
2. Press a screwdriver against the shaft end, and hit the screwdriver with a hammer to remove the chamber stack, center part and rotor.
3. Remove the corrugated spring (158) at the non-drive end.
4. Remove the locking nut (67) and the washer (66). Hold the shaft with a screwdriver in the shaft end.

Related information

A.1. Chamber stack and center part

5.10 Removing the shaft seal

1. Remove the rotating shaft seal face (104).
2. Remove the stationary seat (103) using a needle-noise pliers.

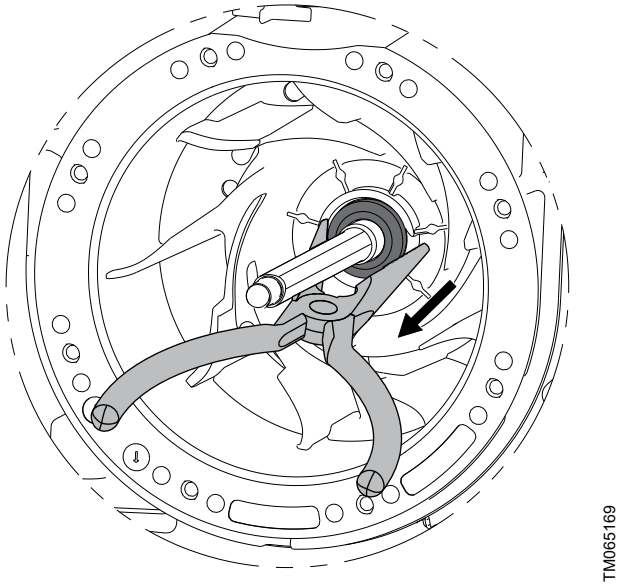

Removing the stationary shaft seal

5.11 Removing the center part

1. Access the shaft end behind the nameplate.
2. Gently knock out the center part by using a driving mandrel and a hammer.
3. With a firm grip on the shaft, lift away the center part with rotor shaft from the pump housing.
4. Remove the corrugated spring (158) at the non-drive end of the pump housing.

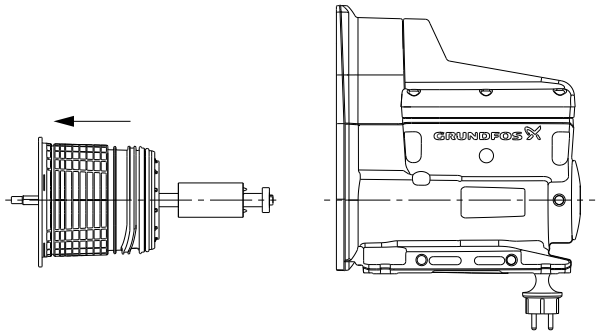

5.12 Removing the shaft from the center part

1. Gently knock out the shaft (172) from the center part (55).

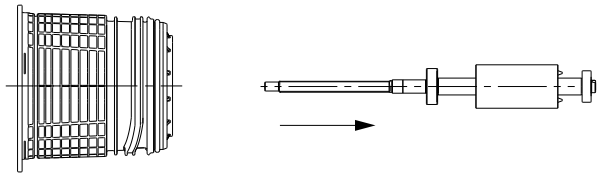

2. Remove the O-ring (229) and fiber disc (77a) from the center part (55).
3. Remove the bearings (153,154) with a trigger tool.

6. Assembling the product

6.1 Before assembly

DANGER
Electric shock
Death or serious personal injury
- Switch off the power supply before you start any work on the product. Make sure that the power supply cannot be switched on accidentally.

- Always replace gaskets and O-rings when you overhaul the pump.
- Clean and check all parts.
- Replace defective parts.

6.2 Mounting the shaft

The position numbers in the following refer to the exploded drawing in the section Exploded view.

1. Assemble the ball bearings (153 and 154), the shaft with the rotor (172) and the washer (229).
2. Mount the seal cover (77a) and the washer (229) on the rotor.
3. Assemble the washer (229) on the rotor (172).

Related information

12. Exploded view

6.3 Mounting the center part

The position numbers in the following refer to the exploded drawing in the section Exploded view.

1. Mount the waved washer (158) in the bottom of the stator housing (180).
2. Mount the O-ring (905) on the stator inside the stator housing (180).
3. Fit the O-ring (906) on the center part (55).
4. Insert the center part (55) in the stator housing (180).

Related information

12. Exploded view

6.4 Fitting the shaft seal

1. Fit the stationary seat (103) with the O-ring (102) against the pump housing.

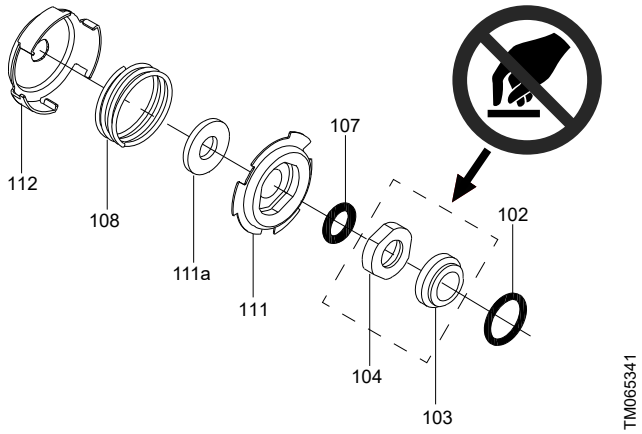

Shaft seal complete

! Do not touch the ceramic faces of the shaft seal.

2. Fit the rotating shaft seal face (104). See the appendix Shaft seal and chamber stack.

Related information

A.1. Shaft seal and chamber stack

6.5 Fitting the chamber stack

The position numbers in the following refer to the exploded drawing in the appendix Shaft seal and chamber stack.

1. Fit the impellers (49), the seal (45) and the chambers (4). Fit the seal ring (44a) last.
2. Fit the washer (66) and the locking nut (67) and tighten it to 5 Nm. Hold the shaft end using a screwdriver.

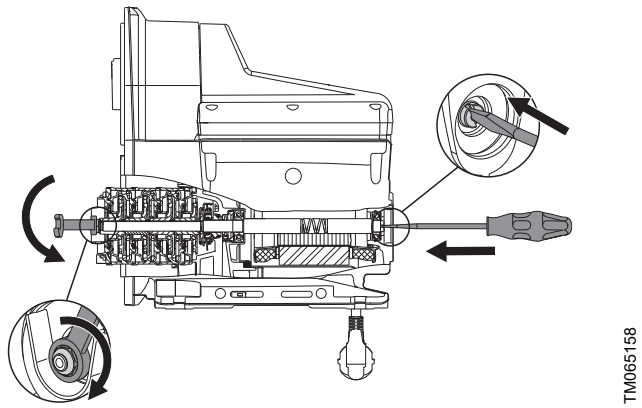

Tightening the nut of the chamber stack

Related information

A.1. Shaft seal and chamber stack

6.6 Fitting the pressure tank and the self-priming valve

1. Fit the flat gasket (42a) and screw the pressure tank (42) on to the connection part (2) by hand.

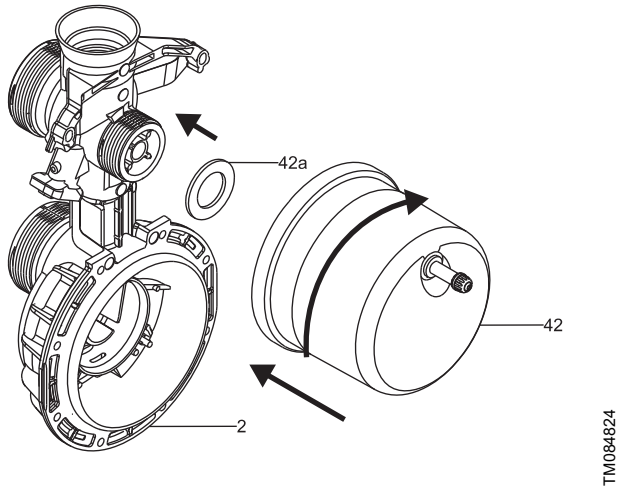

Fitting the pressure tank

2. Fit the self-priming valve (10) and the O-ring (37).

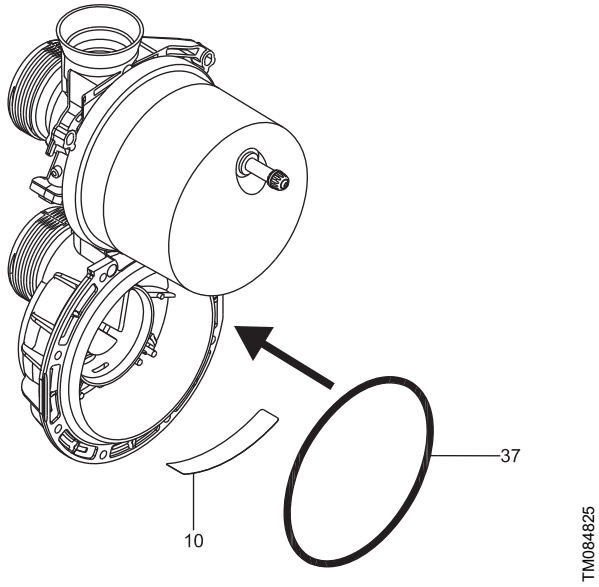

Fitting the self-priming valve and the O-ring

3. Check that the self-priming valve is fitted correctly.

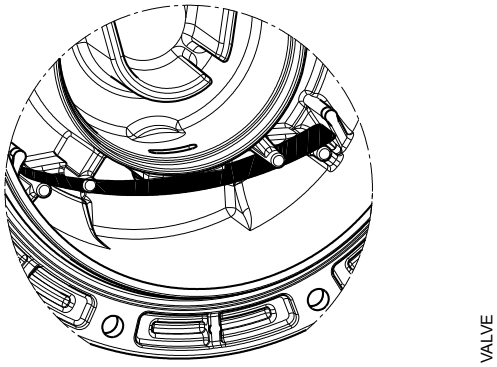

4. Fit the connection part to the pump housing.
   Note that one screw holds the earth connection bracket and the washer.

6.7 Fitting the connection part

1. Fit the connection part to the pump housing.

   Note that one screw holds the earth connection bracket and the washer.

2. Cross-tighten the screws (1-4) to a torque of 0.5 Nm in the sequence shown in the drawing below.

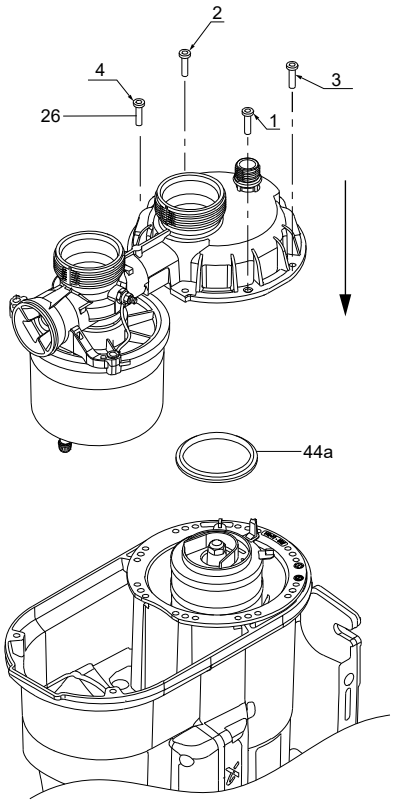

TM084635

Fitting the connection part

3. Cross-tighten the screws (5-10) to a torque of 0.5 Nm in the sequence shown in the drawing below.

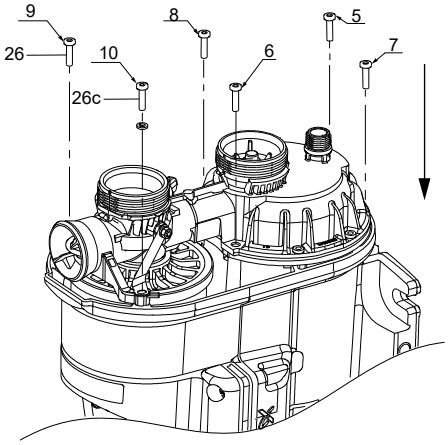

TM084633

4. Cross-tighten the screws (1-10) to a torque of 3 ± 0.5 Nm in the sequence shown in the drawing below.

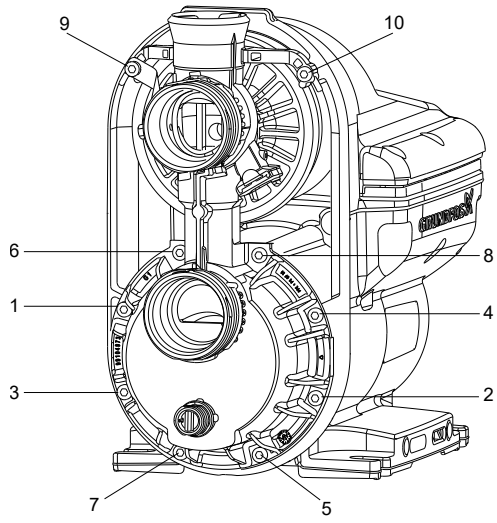

TM084636

6.8 Installing the sensor cable and sensor

1. Lubricate the cable grommet.
2. Place the sensor cable in the SCALA2 sensor tool.
3. Insert the sensor cable in the stator housing.
4. Push the flat end of the SCALA2 sensor tool with the palm of your hand to guide the sensor cable into place.
5. Remove the SCALA2 sensor tool.

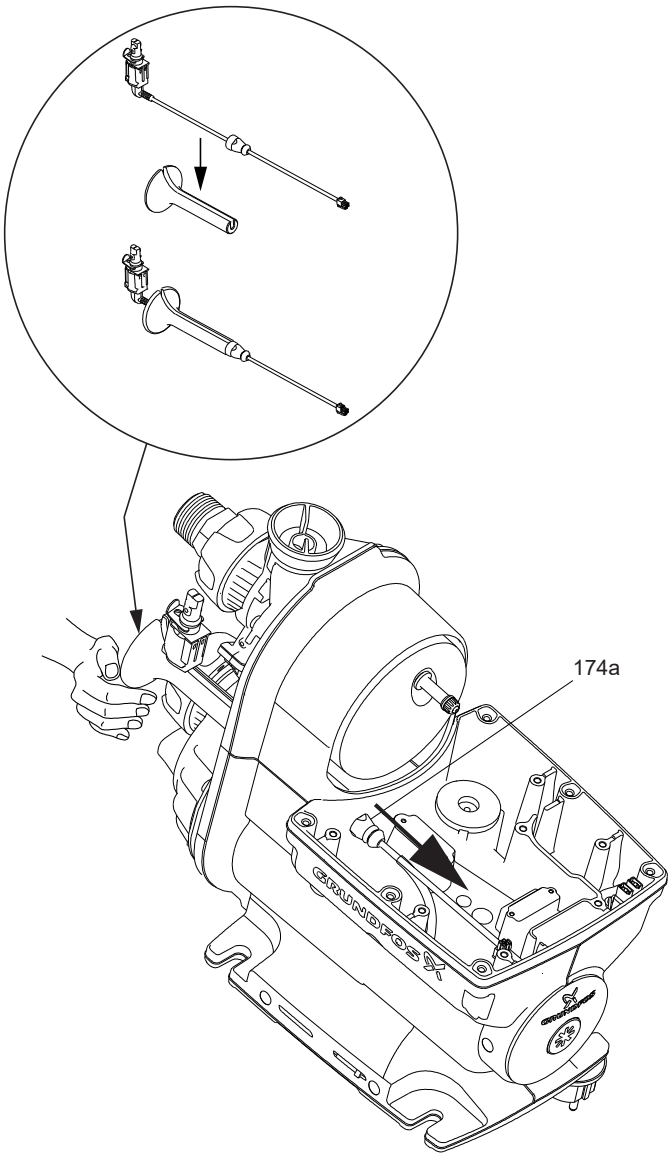

Installing the sensor cable

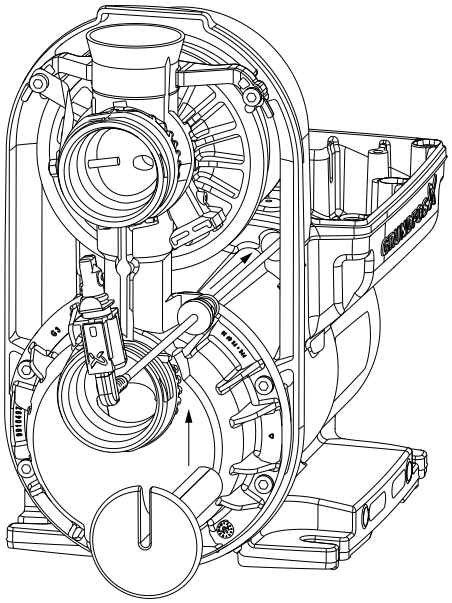

Installing the sensor cable

6. Fit the sensor (174a) and fasten it by means of the retaining clip (175).

! Check that the rotor sensor pocket is seated correctly.

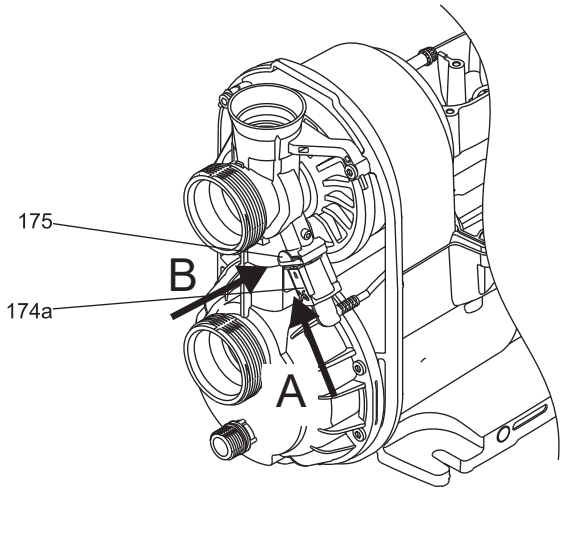

Sensor and retaining clip

6.9 Fitting the pump cover and nipples

1. Press the pump cover back onto the pump housing.
2. Fit new O-rings to the valves, nipples and plugs.
3. Fit the inlet valve in the connection part.
4. Press the nipples into the connection part, fit the union nuts and tighten them by hand.
5. Fit the drain plug (7) and the non-return valve (65a).

Always tighten plastic nuts and plugs by hand to avoid breaking the material.

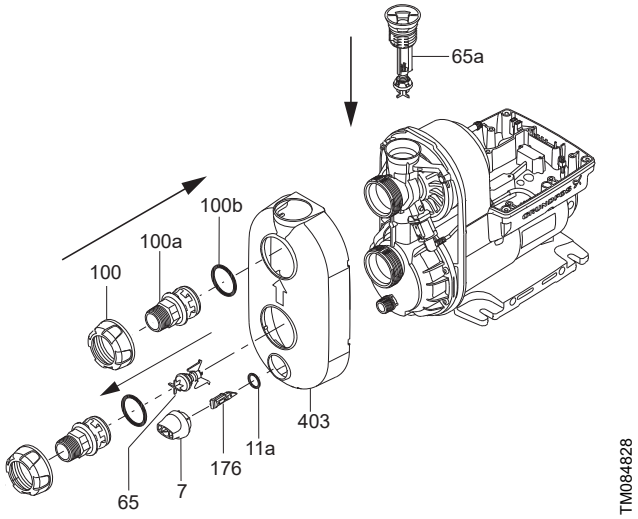

Fitting the nipples and the cover

6.10 Fitting the power plug

1. Fasten the cable gland (1).
2. Place the earth wire and tighten the screw (903).
3. Fasten the cable gland (20).

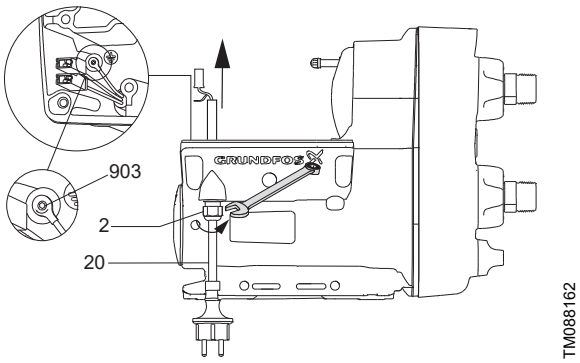

6.11 Mounting the printed circuit board (PCB)

1. Apply a new layer of cooling paste on the surfaces.
2. Mount the new cooling pad (166a).

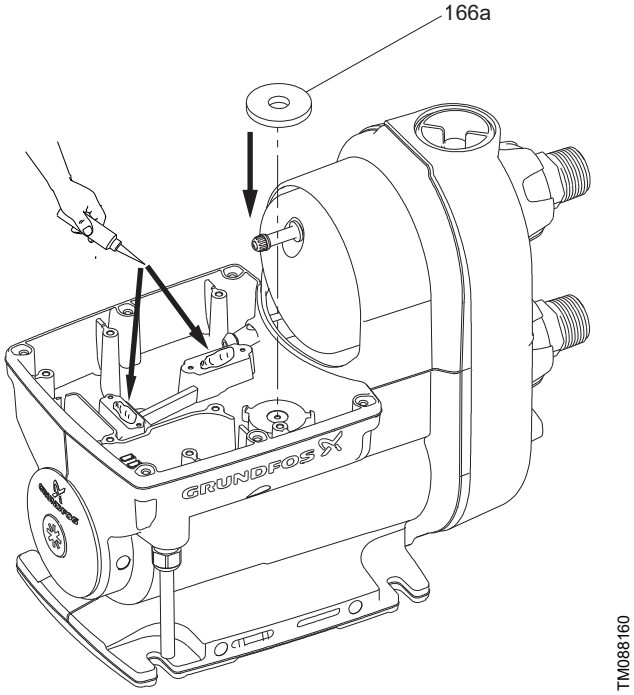

Applying cooling paste and cooling pad

3. Fasten the screws, starting with the modules (900). Observe the torque in the table below.

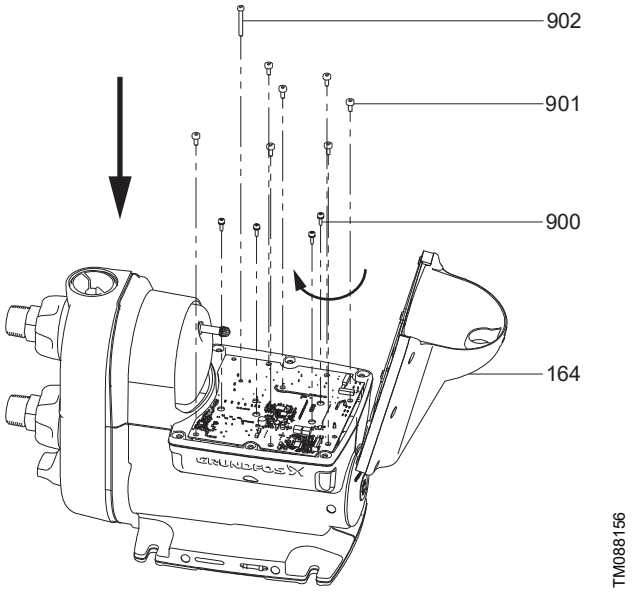

Fastening the screws

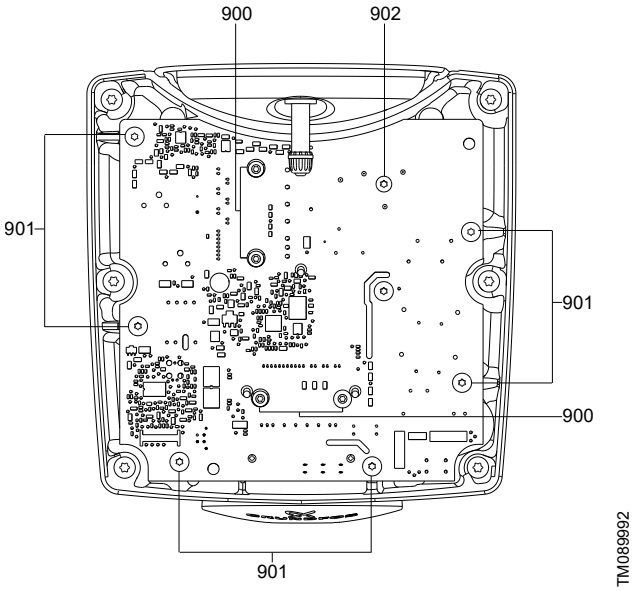

Fastening the screws

Position	Size	Torque
900	M3	0.7 ± 0.1
901	M5	1.55 ± 0.15
902	M4	0.9 ± 0.1

4. Mount the printed circuit board (PCB) (159).
5. Connect the sensor cable (174a) and the power plugs (20).

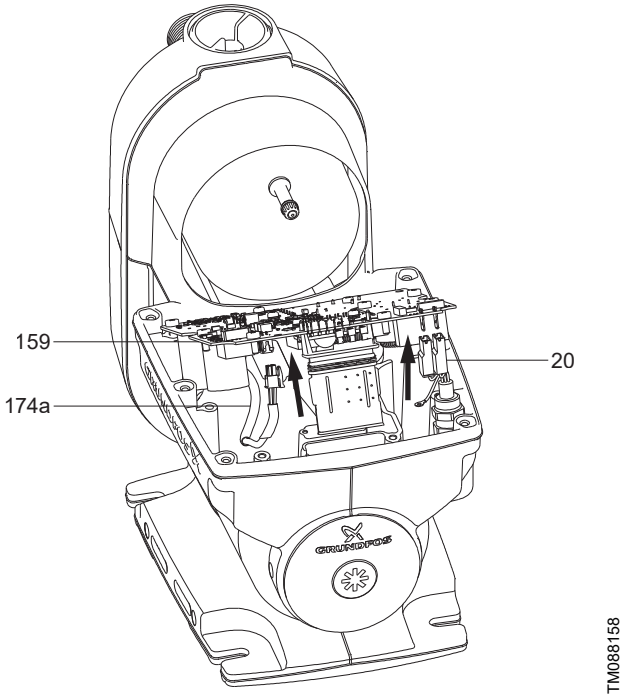

Mounting the printed circuit board (PCB)

6.12 Fitting the control box cover

1. Connect the plug for the operating plug and place the control box cover on the pump.

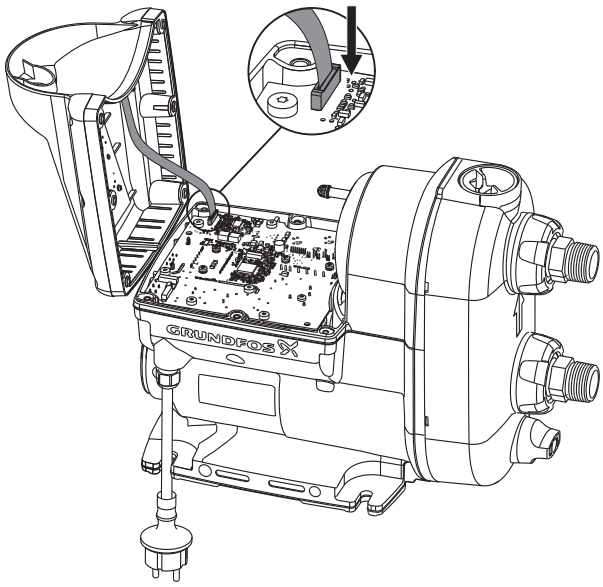

TM065283

Connecting the plug for the operating panel

1. Cross-tighten the six pan-head torx screws according to the table below.

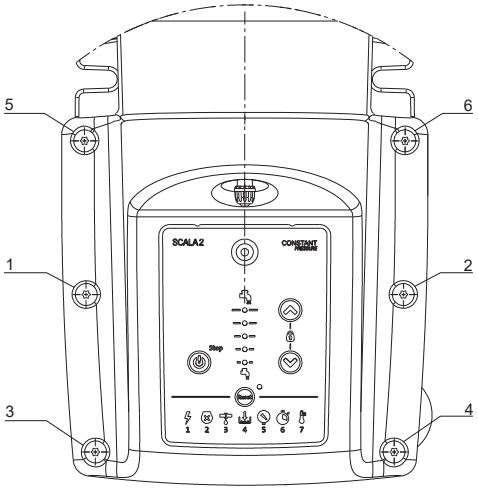

TM064959

Tightening sequence

Sequence	Torque [Nm]
1	2 ± 0.25
2	
3	
4	
5	
6	

7. Corrosion

In case of visible corrosion in the stator, the stator housing must be replaced.

See the acceptable and unacceptable levels of corrosion below.

TM088823

Acceptable level of corrosion

TM088822

Unacceptable level of corrosion

TM088824

Unacceptable level of corrosion

8. Megging

CAUTION
Electric shock
Minor or moderate personal injury
- Disconnect the power supply before removing the front cover.

Never measure with a megger between terminals L and N on the socket, as it will damage the electronic components inside the pump.

The position numbers in the following refer to the exploded drawing in the section Exploded view.

1. Disconnect the power supply.
2. Loosen the screws (164a).
3. Lift off the control box cover (164).
4. Loosen and remove screws (900, 901, 902).
5. Disassemble the power supply plugs and sensor plug from the printed circuit board (PCB) board and lift it away.
6. Identify the stator connections.

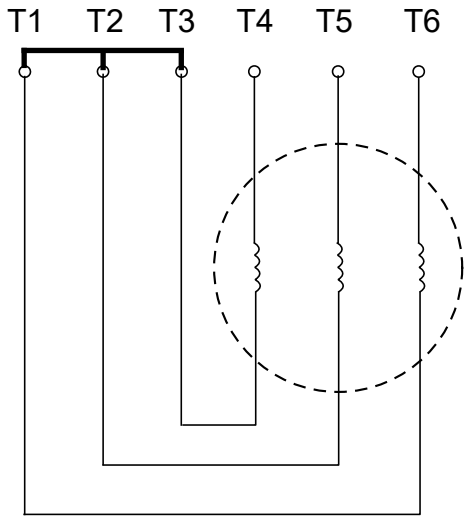

TM088938

7. Measure between each stator winding and earth on the pump (T4 - PE, T5 - PE, T6 - PE).

Max. test voltage	Max. leakage current [mA]
1000 VAC / 1500 VDC	< 35

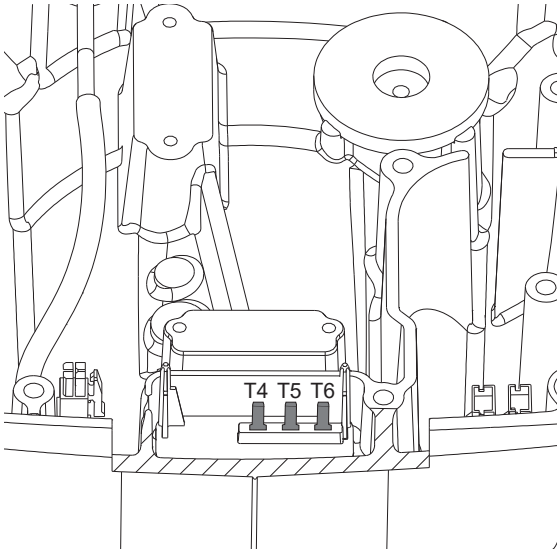

TM089130

8. If the measurement are not within limit, the pump housing or pump must be replaced.

Related information

12. Exploded view

9. Winding resistance

As the motor is star-connected, the easiest way to measure the winding resistance is to measure across two stator windings.

Measure while the coil temperature is approximately 20 °C. It may be necessary to let the motor cool off if it has been running, or if it was stopped because of short-circuit or overload.

Measure between terminal T4 → T5, T4 → T6 and T5 → T6.

Voltage [V]	Wire [Ø mm]	Phase resistance [Ω] @ 20°C
230	0.560	4.60 ± 10 %
115	0.750	1.50 ± 10 %

Terminal	Description
T1, T2, T3	Star connection
T4, T5, T6	Input for the three stator windings

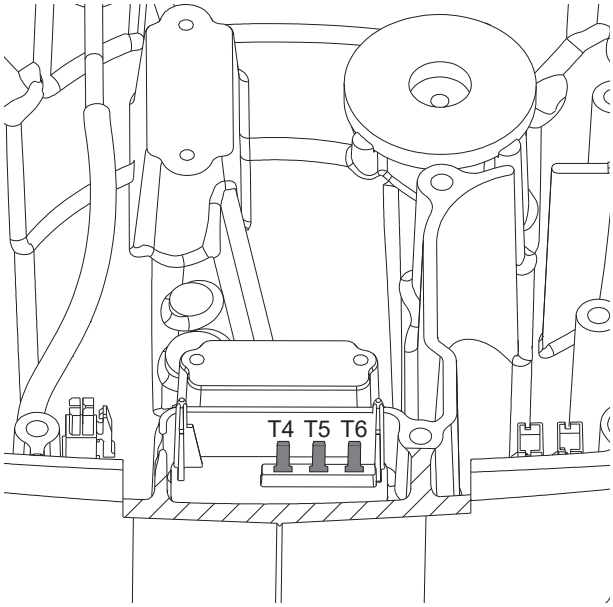

TM089130

Motor terminals

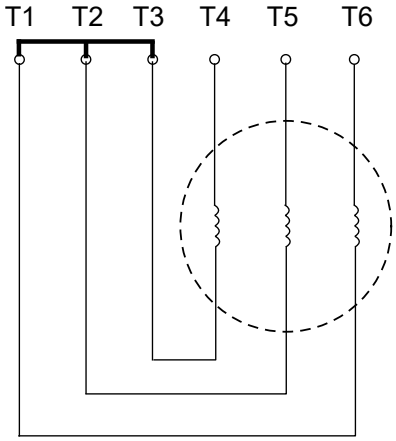

TM088938

Wiring diagram

10. Shaft seal run-in

The shaft seal faces are lubricated by the pumped liquid. A slight leakage from the shaft seal of up to 10 ml per day or 8 to 10 drops per hour may occur.

When the pump is started up for the first time, or when the shaft seal has been replaced, a certain run-in period is required before the leakage is reduced to an acceptable level. The time required for this depends on the operating conditions, that is, every time the operating conditions change, a new run-in period will be started.

Under normal conditions, the leaking liquid will evaporate. As a result, no leakage will be detected.

If the unlikely event of an internal leakage occurs, the liquid will be drained through the bottom of the pump. Install the pump in such a way that no undesirable collateral damage can arise.

11. Fault finding

DANGER
Electric shock
Death or serious personal injury

- Before starting any work on the product, make sure that the power supply has been switched off and that it cannot be accidentally switched on.

11.1 Grundfos Eye operating indications

Grundfos Eye		Indication	Description
	TM053827	No lights are on.	**Power off** The pump is not running.
	TM053829	Two opposite green indicator lights running in the direction of rotation of the pump.	**Power on** The pump is running.
	TM063806	Two opposite green indicator lights are permanently on.	**Power on** The pump is not running.
	TM053839	Two opposite red indicator lights are flashing simultaneously.	**Alarm** The pump has stopped.
	TM1040615	Two opposite red indicator lights are flashing three to five times and in between two opposite green indicator lights are flashing one time.	**Alarm** The pump has stopped. Possible reasons: • The printed circuit board (PCB) is damaged • The stator or sensor is damaged. If repairing or replacing the damaged component does not work, contact Grundfos.

11.2 Fault resetting

You can reset a fault indication in one of the following ways:

- When you have eliminated the fault cause, reset the pump manually by pressing the **Reset** button. The pump will then revert to normal duty.
- If the fault disappears by itself, the pump will attempt to reset automatically and the fault indication will disappear if automatic reset is successful and provided that you have enabled the auto reset function in the service menu.

11.3 The pump is not running

Grundfos Eye: No lights are on.	

Cause	Remedy
Power supply failure.	1. Switch on the power supply. 2. Check the cables and cable connections for defects and loose connections. 3. Check for blown fuses in the electrical installation.

11.4 The pump is not running, and indicator light 1 is on

Grundfos Eye: Two opposite green indicator lights are permanently on.	
Indicator light 1 is on, indicating power supply failure.	

Cause	Remedy
The power supply is out of prescribed voltage range.	1. Check the power supply and the pump nameplate. 2. Reestablish the power supply within the prescribed voltage range.

11.5 The pump is not running, and indicator light 2 is on

Grundfos Eye: Two opposite red indicator lights are flashing simultaneously.	
Indicator light 2 is on, indicating that the pump is blocked, for instance the shaft seal has seized up.	

Cause	Remedy
The pump is blocked by impurities.	1. Check that the pump is not blocked. 2. If the pump has been drained, it must be filled with liquid before startup. 3. Start up the pump. 4. The pump will remember the controller settings even if it is turned off. Contact Grundfos Service if the problem persists.
The shaft seal has seized up.	1. Check that the pump is not blocked. 2. If the pump has been drained, it must be filled with liquid before startup. 3. Start up the pump. 4. The pump will remember the controller settings even if it is turned off. Contact Grundfos Service if the problem persists.

11.6 The pump is not running, and indicator light 4 is on

Grundfos Eye: Two opposite green indicator lights are permanently on.	
Indicator light 4 is on, indicating dry running or water shortage.	

Cause	Remedy
Dry running.	• Check the water source, and prime the pump.

11.7 The pump is not running, and indicator light 3 is on

Grundfos Eye: Two opposite red indicator lights are flashing simultaneously.	
Indicator light 3 is on, indicating leakage in the installation after the pump.	

Cause	Remedy
The internal valve is defective or blocked in completely or partly open position.	• Clean, repair or replace the internal valve.

11.8 The pump is not running, and indicator light 6 is on

Grundfos Eye: Two opposite green indicator lights are permanently on.	
Indicator light 6 is on, indicating that the maximum runtime has been exceeded.	

Cause	Remedy
The maximum runtime has been exceeded.	• Check the installation for leakage and reset the alarm.

11.9 The pump is running, and indicator light 3 is on

Grundfos Eye: Two opposite green indicator lights are rotating.	
Indicator light 3 is on, indicating leakage in the installation after the pump	

Cause	Remedy
Leakage from the pipe system, or the external non-return valve is not properly closed due to impurities.	• Check and repair the pipe system, or clean, repair or replace the external non-return valve.
Small continuous consumption.	• Check the taps and reconsider the usage pattern (for example, ice machines and water evaporators for air-conditioning).

11.10 The pump is running, and indicator light 7 is on

Grundfos Eye: Two opposite green indicator lights are rotating.	
Indicator light 7 is on, indicating that the temperature is outside the range.	

Cause	Remedy
The temperature of the pump and water is below 3 °C.	• Consider protecting the pump and the installation against frost.

11.11 Insufficient pump performance

Grundfos Eye: Two opposite green indicator lights are rotating.	

Cause	Remedy
The pump inlet pressure is too low.	• Check the inlet conditions of the pump.
The pump is undersized.	• Replace the pump with a bigger pump.
The inlet pipe, the inlet strainer or the pump is partly blocked by impurities.	• Clean the inlet pipe or the pump.
There is a leakage in the inlet pipe.	• Repair the inlet pipe.
There is air in the inlet pipe or the pump.	• Prime the inlet pipe and the pump. • Check the inlet conditions of the pump.
The required outlet pressure is too low for the installation.	• Increase the pressure setting (arrow up).

11.12 Insufficient pump performance, and indicator light 7 is on

Grundfos Eye: Two opposite green indicator lights are rotating.	
Indicator light 7 is on, indicating that the temperature is outside the range.	

Cause	Remedy
The maximum temperature has been exceeded, and the pump is running at reduced performance.	• Check the cooling conditions. Protect the pump against direct sunlight or any nearby heat sources.

11.13 System overpressure, and indicator light 5 is on

Grundfos Eye: Two opposite green indicator lights are rotating.	
Indicator light 5 is on, indicating that the maximum pressure has been exceeded or the setpoint cannot be reached.	

Cause	Remedy
The setpoint is set too high. The difference between the outlet pressure and the inlet pressure must not exceed 3.5 bar, 0.35 MPa (51 psi).	• Reduce the pressure to a new setpoint (maximum 3.5 bar, 0.35 MPa (51 psi) + positive inlet pressure). Example: If the inlet pressure is 0.5 bar, 0.05 MPa (7 psi), the maximum outlet pressure is 4 bar, 0.4 MPa (58 psi).
The maximum pressure has been exceeded, the inlet pressure is higher than 6 bar, 0.6 MPa (87 psi).	• Check the inlet conditions.
The maximum pressure has been exceeded. Equipment elsewhere in the system causes a high pressure at the pump, for example water heater or defective safety equipment.	• Check the installation.

11.14 After a reset, the pump runs briefly, and indicator light 4 is on

Grundfos Eye: Two opposite green indicator lights are rotating.	
Indicator light 4 is on, indicating dry running or water shortage.	

Cause	Remedy
Dry running or water shortage.	• Check the water source, and prime the pump.
The inlet pipe is blocked by impurities.	• Clean the inlet pipe.
The foot or internal valve is blocked in closed position.	• Clean, repair or replace the foot or internal valve.
There is a leakage in the inlet pipe.	• Repair the inlet pipe.
Air in the inlet pipe or the pump.	• Prime the inlet pipe and the pump. Check the inlet conditions of the pump.

11.15 After resetting, the pump immediately restarts, and indicator light 3 is on

Grundfos Eye: Two opposite green indicator lights are rotating.	
Indicator light 3 is on, indicating leakage in the installation after the pump.	

Cause	Remedy
The internal valve is defective or blocked in completely or partly open position.	• Clean, repair or replace the internal valve.
The tank precharge pressure is not correct.	• Adjust the tank precharge pressure to 70 % of the required outlet pressure.

12. Exploded view

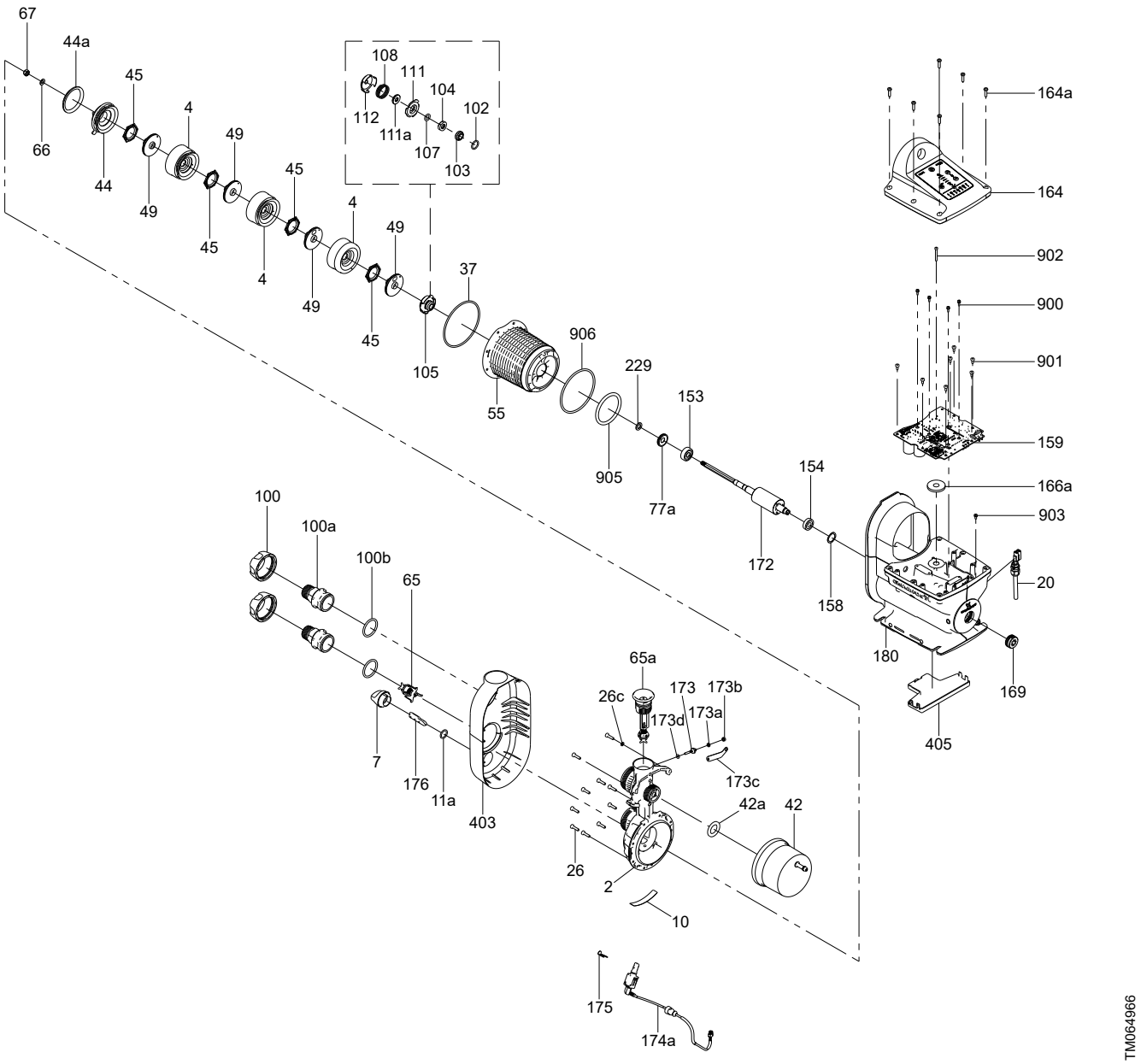

Exploded view

Position number list

Pos.	Description
2	Connection part
4	Chamber
7	Drain plug
10	Self-priming valve
11a	O-ring
20	Cable
26	Screw
26c	Lock washer
37	O-ring
42	Tank complete
42a	Flat gasket
44	Inlet part
44a	Seal ring
45	Seal
49	Impeller

Pos.	Description
55	Center part
65	Non-return valve, inlet
65a	Non-return valve, outlet
66	Washer
67	Locking nut
77a	Seal cover
100	Union nut
100a	Nipple
100b	O-ring
102	O-ring
103	Stationary seat
104	Rotating seal face
105	Shaft seal complete
107	O-ring
108	Spring
111	Seal driver
111a	Washer
112	Seal driver

Pos.	Description
153	**Ball bearing 6201.2Z.C4.SYN**
154	Ball bearing 6001.2Z.C4.SYN
158	Waved washer D27.5/21 x 0.3
159	Mainboard cpl.
164	Control box cover
164a	Pan-head torx screw
166a	Cooling pad
169	Plug
172	Shaft with rotor cpl.
173	Double-end stud bolt
173a	Lock washer
173b	Hexagon nut
173c	Earth connection bracket
173d	O-ring
174a	Sensor complete
175	Retaining clip
176	Locking pin
180	Combined pump and stator housing
229	Washer D19/11.5 x 2
403	Pump cover
405	Drip pan
900	Screw, M3x12 8.8
902	Screw, M4x35 10.9
905	O-ring D 70.5 x 6.8
906	O-ring D 108.0 x 4.2
901	Screw, M5x10 8.8

Related information

6.2 Mounting the shaft
6.3 Mounting the center part
8. Megging

13. Document quality feedback

To provide feedback about this document, scan the QR code using your phone's camera or a QR code app.

FEEDBACK98979478

Click here to submit your feedback

1. Chamber stack and center part

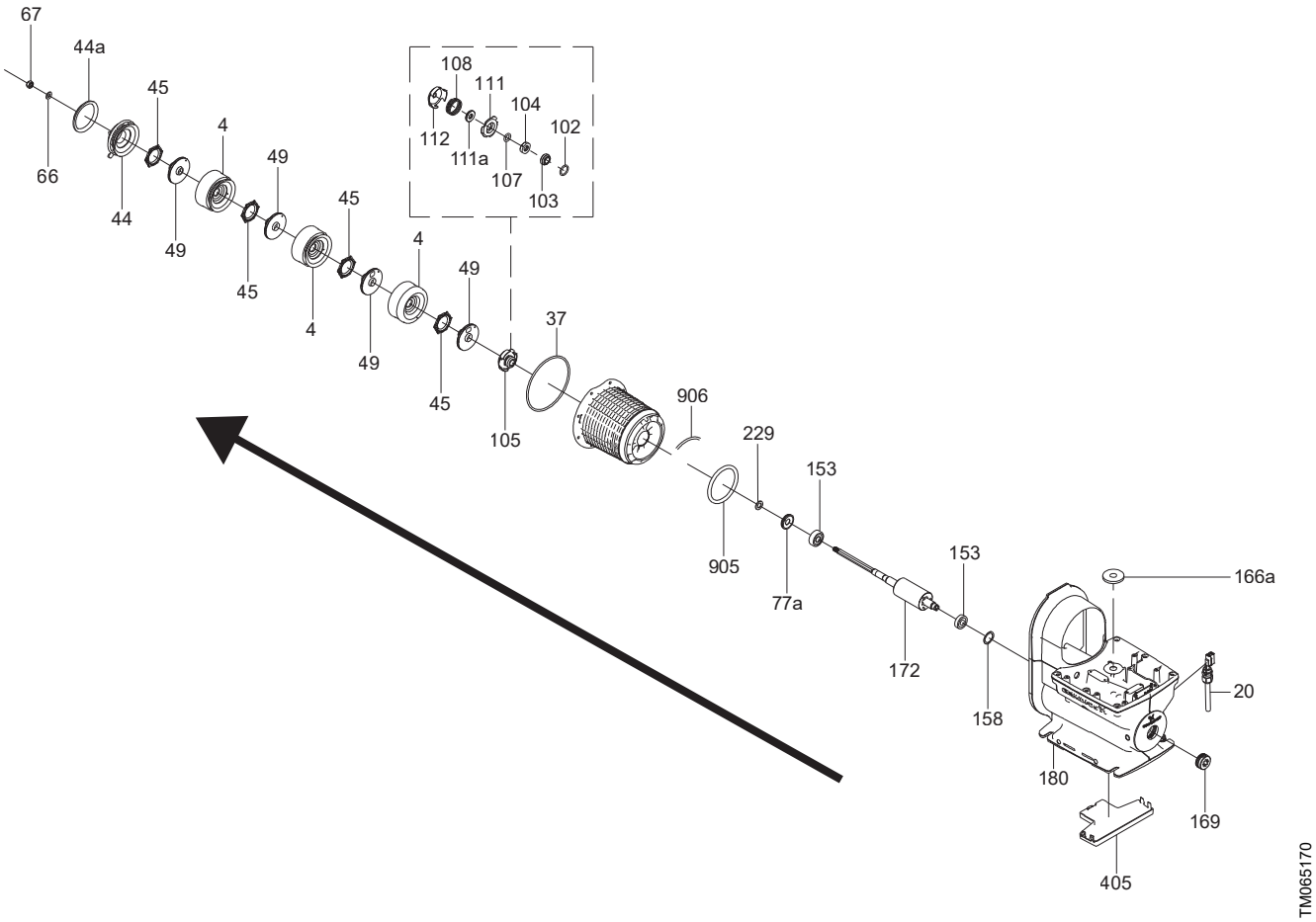

Related information

5.8 Removing the chamber stack

5.9 Removing the chamber stack and center part

1. Shaft seal and chamber stack

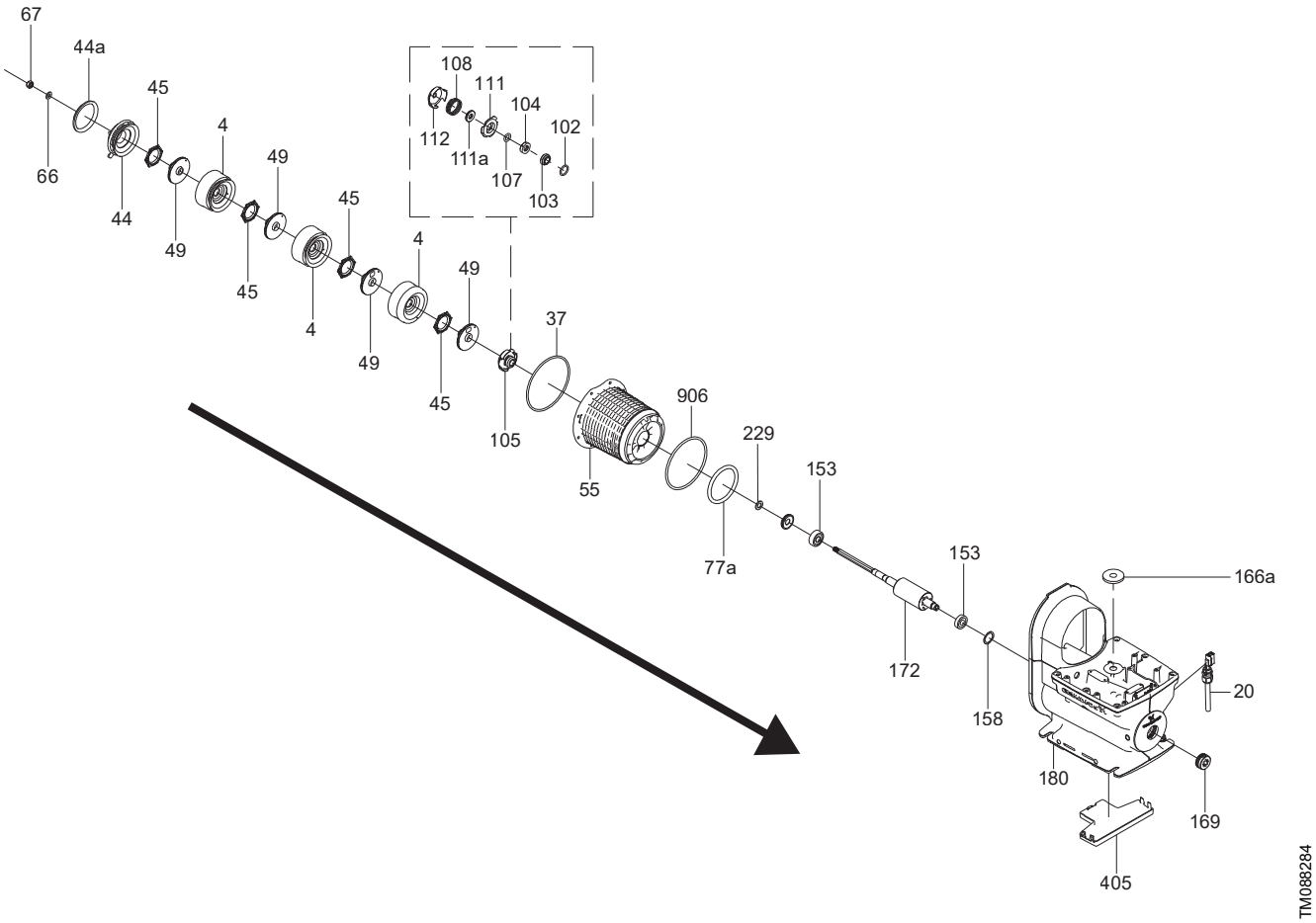

Related information

6.4 Fitting the shaft seal

6.5 Fitting the chamber stack

Argentina
Bombas GRUNDFOS de Argentina S.A.
Ruta Panamericana km. 37.500industin
1619 - Garín Pcia. de B.A.
Tel.: +54-3327 414 444
Fax: +54-3327 45 3190

Australia
GRUNDFOS Pumps Pty. Ltd.
P.O. Box 2040
Regency Park
South Australia 5942
Tel.: +61-8-8461-4611
Fax: +61-8-8340-0155

Austria
GRUNDFOS Pumpen Vertrieb Ges.m.b.H.
Grundfosstraße 2
A-5082 Grödig/Salzburg
Tel.: +43-6246-883-0
Fax: +43-6246-883-30

Belgium
N.V. GRUNDFOS Bellux S.A.
Boomsesteenweg 81-83
B-2630 Aartselaar
Tel.: +32-3-870 7300
Fax: +32-3-870 7301

Bosnia and Herzegovina
GRUNDFOS Sarajevo
Zmaja od Bosne 7-7A
BiH-71000 Sarajevo
Tel.: +387 33 592 480
Fax: +387 33 590 465
www.ba.grundfos.com
E-mail: grundfos@bih.net.ba

Brazil
BOMBAS GRUNDFOS DO BRASIL
Av. Humberto de Alencar Castelo Branco, 630
CEP 09850 - 300
São Bernardo do Campo - SP
Tel.: +55-11 4393 5533
Fax: +55-11 4343 5015

Bulgaria
Grundfos Bulgaria EOOD
Slatina District
Iztochna Tangenta street no. 100
BG - 1592 Sofia
Tel.: +359 2 49 22 200
Fax: +359 2 49 22 201
E-mail: bulgaria@grundfos.bg

Canada
GRUNDFOS Canada inc.
2941 Brighton Road
Oakville, Ontario
L6H 6C9
Tel.: +1-905 829 9533
Fax: +1-905 829 9512

China
GRUNDFOS Pumps (Shanghai) Co. Ltd.
10F The Hub, No. 33 Suhong Road
Minhang District
Shanghai 201106 PRC
Tel.: +86 21 612 252 22
Fax: +86 21 612 253 33

Colombia
GRUNDFOS Colombia S.A.S.
Km 1.5 vía Siberia-Cota Conj. Potrero Chico,
Parque Empresarial Arcos de Cota Bod. 1A.
Cota, Cundinamarca
Tel.: +57(1)-2913444
Fax: +57(1)-8764586

Croatia
GRUNDFOS CROATIA d.o.o.
Buzinski prilaz 38, Buzin
HR-10010 Zagreb
Tel.: +385 1 6595 400
Fax: +385 1 6595 499
www.hr.grundfos.com

Czech Republic
GRUNDFOS Sales Czechia and Slovakia s.r.o.
Čajkovského 21
779 00 Olomouc
Tel.: +420-585-716 111

Denmark
GRUNDFOS DK A/S
Martin Bachs Vej 3
DK-8850 Bjerringbro
Tel.: +45-87 50 50 50
Fax: +45-87 50 51 51
E-mail: info_GDK@grundfos.com
www.grundfos.com/DK

Estonia
GRUNDFOS Pumps Eesti OÜ
Peterburi tee 92G
11415 Tallinn
Tel.: + 372 606 1690
Fax: + 372 606 1691

Finland
OY GRUNDFOS Pumput AB
Trukkikuja 1
FI-01360 Vantaa
Tel.: +358-(0) 207 889 500

France
Pompes GRUNDFOS Distribution S.A.
Parc d'Activités de Chesnes
57, rue de Malacombe
F-38290 St. Quentin Fallavier (Lyon)
Tel.: +33-4 74 82 15 15
Fax: +33-4 74 94 10 51

Germany
GRUNDFOS GMBH
Schlüterstr. 33
40699 Erkrath
Tel.: +49-(0) 211 929 69-0
Fax: +49-(0) 211 929 69-3799
E-mail: infoservice@grundfos.de
Service in Deutschland:
kundendienst@grundfos.de

Greece
GRUNDFOS Hellas A.E.B.E.
20th km. Athinon-Markopoulou Av.
P.O. Box 71
GR-19002 Peania
Tel.: +0030-210-66 83 400
Fax: +0030-210-66 46 273

Hong Kong
GRUNDFOS Pumps (Hong Kong) Ltd.
Unit 1, Ground floor, Siu Wai industrial Centre
29-33 Wing Hong Street & 68 King Lam Street, Cheung Sha Wan
Kowloon
Tel.: +852-27861706 / 27861741
Fax: +852-27858664

Hungary
GRUNDFOS South East Europe Kft.
Tópark u. 8
H-2045 Törökbálint
Tel.: +36-23 511 110
Fax: +36-23 511 111

India
GRUNDFOS Pumps India Private Limited
118 Old Mahabalipuram Road
Thoraipakkam
Chennai 600 097
Tel.: +91-44 2496 6800

Indonesia
PT GRUNDFOS Pompa
Graha intirub Lt. 2 & 3
Jln. Cililitan Besar No.454. Makasar, Jakarta Timur
ID-Jakarta 13650
Tel.: +62 21-469-51900
Fax: +62 21-460 6910 / 460 6901

Ireland
GRUNDFOS (Ireland) Ltd.
Unit A, Merrywell Business Park
Ballymount Road Lower
Dublin 12
Tel.: +353-1-4089 800
Fax: +353-1-4089 830

Italy
GRUNDFOS Pompe Italia S.r.l.
Via Gran Sasso 4
I-20060 Truccazzano (Milano)
Tel.: +39-02-95838112
Fax: +39-02-95309290 / 95838461

Japan
GRUNDFOS Pumps K.K.
1-2-3, Shin-Miyakoda, Kita-ku
Hamamatsu
431-2103 Japan
Tel.: +81 53 428 4760
Fax: +81 53 428 5005

Kazakhstan
Grundfos Kazakhstan LLP
7' Kyz-Zhibek Str., Kok-Tobe micr.
KZ-050020 Almaty Kazakhstan
Tel.: +7 (727) 227-98-55/56

Korea
GRUNDFOS Pumps Korea Ltd.
6th Floor, Aju Building 679-5
Yeoksam-dong, Kangnam-ku, 135-916
Seoul, Korea
Tel.: +82-2-5317 600
Fax: +82-2-5633 725

Latvia
SIA GRUNDFOS Pumps Latvia
Deglava biznesa centrs
Augusta Deglava ielā 60
LV-1035, Rīga,
Tel.: + 371 714 9640, 7 149 641
Fax: + 371 914 9646

Lithuania
GRUNDFOS Pumps UAB
Smolensko g. 6
LT-03201 Vilnius
Tel.: + 370 52 395 430
Fax: + 370 52 395 431

Malaysia
GRUNDFOS Pumps Sdn. Bhd.
7 Jalan Peguam U1/25
Glenmarie industrial Park
40150 Shah Alam, Selangor
Tel.: +60-3-5569 2922
Fax: +60-3-5569 2866

Mexico
Bombas GRUNDFOS de México S.A. de C.V.
Boulevard TLC No. 15
Parque industrial Stiva Aeropuerto
Apodaca, N.L. 66600
Tel.: +52-81-8144 4000
Fax: +52-81-8144 4010

Netherlands
GRUNDFOS Netherlands
Veluwezoom 35
1326 AE Almere
Postbus 22015
1302 CA ALMERE
Tel.: +31-88-478 6336
Fax: +31-88-478 6332
E-mail: info_gnl@grundfos.com

New Zealand
GRUNDFOS Pumps NZ Ltd.
17 Beatrice Tinsley Crescent
North Harbour Industrial Estate
Albany, Auckland
Tel.: +64-9-415 3240
Fax: +64-9-415 3250

Norway
GRUNDFOS Pumper A/S
Strømsveien 344
Postboks 235, Leirdal
N-1011 Oslo
Tel.: +47-22 90 47 00
Fax: +47-22 32 21 50

Poland
GRUNDFOS Pompy Sp. z o.o.
ul. Klonowa 23
Baranowo k. Poznania
PL-62-081 Przeźmierowo
Tel.: (+48-61) 650 13 00
Fax: (+48-61) 650 13 50

Portugal
Bombas GRUNDFOS Portugal, S.A.
Rua Calvet de Magalhães, 241
Apartado 1079
P-2770-153 Paço de Arcos
Tel.: +351-21-440 76 00
Fax: +351-21-440 76 90

Romania
GRUNDFOS Pompe România SRL
S-PARK BUSINESS CENTER, Clădirea A2, etaj 2
Str. Tipografilor, Nr. 11-15, Sector 1, Cod 013714
Bucuresti, Romania
Tel.: 004 021 2004 100
E-mail: romania@grundfos.ro

Serbia
Grundfos Srbija d.o.o.
Omladinskih brigada 90b
11070 Novi Beograd
Tel.: +381 11 2258 740
Fax: +381 11 2281 769
www.rs.grundfos.com

Singapore
GRUNDFOS (Singapore) Pte. Ltd.
25 Jalan Tukang
Singapore 619264
Tel.: +65-6681 9688
Faxax: +65-6681 9689

Slovakia
GRUNDFOS s.r.o.
Prievozská 4D 821 09 BRATISLAVA
Tel.: +421 2 5020 1426
sk.grundfos.com

Slovenia
GRUNDFOS LJUBLJANA, d.o.o.
Leskoškova 9e, 1122 Ljubljana
Tel.: +386 (0) 1 568 06 10
Fax: +386 (0)1 568 06 19
E-mail: tehnika-si@grundfos.com

South Africa
GRUNDFOS (PTY) LTD
16 Lascelles Drive, Meadowbrook Estate
1609 Germiston, Johannesburg
Tel.: (+27) 10 248 6000
Fax: (+27) 10 248 6002
E-mail: lgradidge@grundfos.com

Spain
Bombas GRUNDFOS España S.A.
Camino de la Fuentecilla, s/n
E-28110 Algete (Madrid)
Tel.: +34-91-848 8800
Fax: +34-91-628 0465

Sweden
GRUNDFOS AB
Box 333 (Lunnagårdsgatan 6)
431 24 Mölndal
Tel.: +46 31 332 23 000
Fax: +46 31 331 94 60

Switzerland
GRUNDFOS Pumpen AG
Bruggacherstrasse 10
CH-8117 Fällanden/ZH
Tel.: +41-44-806 8111
Fax: +41-44-806 8115

Taiwan
GRUNDFOS Pumps (Taiwan) Ltd.
7 Floor, 219 Min-Chuan Road
Taichung, Taiwan, R.O.C.
Tel.: +886-4-2305 0868
Fax: +886-4-2305 0878

Thailand
GRUNDFOS (Thailand) Ltd.
92 Chaloem Phrakiat Rama 9 Road
Dokmai, Pravej, Bangkok 10250
Tel.: +66-2-725 8999
Fax: +66-2-725 8998

Turkey
GRUNDFOS POMPA San. ve Tic. Ltd. Sti.
Gebze Organize Sanayi Bölgesi
Ihsan dede Caddesi
2. yol 200. Sokak No. 204
41490 Gebze/ Kocaeli
Tel.: +90 - 262-679 7979
Fax: +90 - 262-679 7905
E-mail: satis@grundfos.com

Ukraine
ТОВ "ГРУНДФОС УКРАЇНА"
Бізнес Центр Європа
Столичне шосе, 103
м. Київ, 03131, Україна
Tel.: (+38 044) 237 04 00
Fax: (+38 044) 237 04 01
E-mail: ukraine@grundfos.com

United Arab Emirates
GRUNDFOS Gulf Distribution
P.O. Box 16768
Jebel Ali Free Zone, Dubai
Tel.: +971 4 8815 166
Fax: +971 4 8815 136

United Kingdom
GRUNDFOS Pumps Ltd.
Grovebury Road
Leighton Buzzard/Beds. LU7 4TL
Tel.: +44-1525-850000
Fax: +44-1525-850011

U.S.A.
Global Headquarters for WU
856 Koomey Road
Brookshire, Texas 77423 USA
Phone: +1-630-236-5500

Uzbekistan
Grundfos Tashkent, Uzbekistan
The Representative Office of Grundfos Kazakhstan in Uzbekistan
38a, Oybek street, Tashkent
Tel.: (+998) 71 150 3290 / 71 150 3291
Fax: (+998) 71 150 3292

© 2025 Grundfos Holding A/S, all rights reserved.

Trademarks displayed in this material, including but not limited to Grundfos and the Grundfos logo, are registered trademarks owned by The Grundfos Group.

98979478 **03.2025**

ECM: 1417664