Sololift2

Small lifting stations

60 Hz

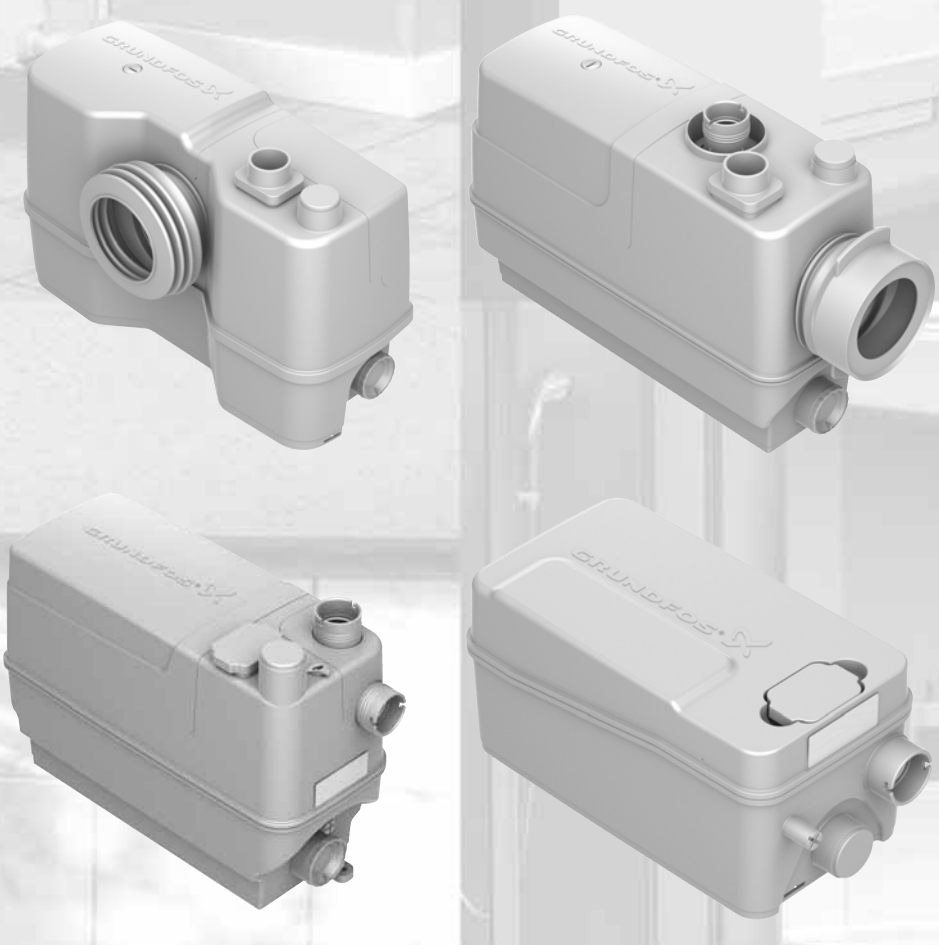

be
think
innovate

GRUNDFOS

Table of contents

1. Product overview 3
Sololift2 for toilet applications 3
Sololift2 for grey wastewater applications 3
Applications 4
Functions 4
Marking and approvals 5

2. Sololift2 WC-1 6
Applications 6
Features and benefits 6
Sizing guide 6
Construction features 7
Installation requirements 8
Product numbers 8
Accessories 9
Technical data 10

3. Sololift2 WC-3 11
Applications 11
Features and benefits 11
Sizing guide 11
Construction features 12
Installation requirements 13
Product numbers 13
Accessories 14
Technical data 15

4. Sololift2 CWC-3 16
Applications 16
Features and benefits 16
Sizing guide 16
Construction features 17
Installation requirements 18
Product numbers 18
Accessories 18
Technical data 19

5. Sololift2 C-3 20
Applications 20
Features and benefits 20
Sizing guide 20
Construction features 21
Installation requirements 22
Product numbers 23
Accessories 23
Technical data 24

6. Sololift2 D-2 25
Applications 25
Features and benefits 25
Sizing guide 25
Construction features 26
Installation requirements 27
Product numbers 27
Technical data 28

7. Product range, overview 29
Product numbers 29
Accessories 29
Technical data 29
Scope of delivery 30

8. Further product documentation 31
Grundfos GO 32

1. Product overview

Sololift2 for toilet applications

Sololift2 WC-1	Description	Technical data
TM06 4288 1815	Suitable for pumping wastewater from a toilet and washbasin. Features: • Robust design for safe and trouble-free operation with high-performance pump and powerful cutter • ready to install • quick and easy installation • service-friendly design with dry motor unit • easy replacement using flexible connectors and adapters for discharge and inlets.	$H_{max.}$: 26.2 ft (8 m). $Q_{max.}$: 38 gpm (142 l/min). Power consumption, P1: Max. 750 W. Flexible discharge elbow: ∅0.75"/1"/1.25" Toilet connections: ∅4" Dimensions of possible inlet: Top ∅1.25"/1.5"

Sololift2 WC-3	Description	Technical data
TM06 4289 1815	Suitable for pumping wastewater from a toilet, washbasin, cabinet shower and a bidet or urinal. Features: • Robust design for safe and trouble-free operation with high-performance pump and powerful cutter • ready to install • quick and easy installation • service-friendly design with dry motor unit • easy replacement using flexible connectors and adapters for discharge and inlets.	$H_{max.}$: 26.2 ft (8 m). $Q_{max.}$: 38 gpm (142 l/min.) Power consumption, P1: Max. 750 W. Flexible discharge elbow: ∅0.75"/1"/1.25" Toilet connections: ∅4" Dimensions of possible inlet: Side ∅1.25"/2" (Top ∅1.25"/1.5")

Sololift2 CWC-3	Description	Technical data
TM06 4290 1815	Suitable for pumping wastewater from a wall-hung toilet, washbasin, cabinet shower and a bidet or urinal. Features: • Slim design for front-wall installation • robust design for safe and trouble-free operation with high-performance pump and powerful cutter • quick and easy installation • service-friendly design with dry motor unit • easy replacement using flexible connectors and adapters for discharge and inlets.	$H_{max.}$: 26.2 ft (8 m). $Q_{max.}$: 38 gpm (142 l/min). Power consumption, P1: Max. 750 W. Flexible discharge elbow: ∅0.75"/1"/1.25" Toilet connections: ∅4" Dimensions of possible inlet: Side ∅1.25"/2" (Top ∅1.25"/1.5")

Sololift2 for grey wastewater applications

Sololift2 C-3	Description	Technical data
TM06 4230 1715	Suitable for pumping grey wastewater from a washing machine, dishwasher, bath tub, cabinet shower, washbasin or kitchen sink. Features: • Slim design for front-wall installation • high-performance pump with 0.79 in. (20 mm) free passage for handling effluents up to 194 °F (90 °C) • ready to install • quick and easy installation • service-friendly design with dry motor unit • easy replacement using flexible connectors and adapters for discharge and inlets.	$H_{max.}$: 26.2 ft (8 m). $Q_{max.}$: 47 gpm (177 l/min.) Power consumption, P1: Max. 650 W. Flexible discharge elbow: ∅0.75"/1"/1.25" Toilet connections: ∅4" Dimensions of possible inlet: Side ∅1.25"/2" (Top ∅1.25"/1.5")

Sololift2 D-2	Description	Technical data
TM06 4291 1815	Extremely compact variant for pumping grey wastewater from a washbasin, cabinet shower or bidet. Features: • Design for front-wall installation or installation in a cabinet • robust design for safe and trouble-free operation with high-performance pump with 0.39 in. (10 mm) free passage • ready to install • built-in check flap valve, venting valve with carbon filter and overflow protection (same feature on Sololift2 C-3) • quick and easy installation • service-friendly design with dry motor unit.	$H_{max.}$: 18 ft (5.5 m). $Q_{max.}$: 30 gpm (115 l/min.) Power consumption, P1: Max. 320 W. Flexible discharge elbow: ∅0.5"/1.25" Toilet connections: ∅4" Dimensions of possible inlet: Side ∅1.25"/1.5"

Applications

For installations above sewer level, it is recommended to lead wastewater directly to the sewer by means of natural slope.

Any sanitary unit positioned below sewer level (backflow level) or far away from the main sewage discharge pipe can easily be drained by a Sololift2.

Sololift2 is suitable for pumping wastewater from places in private dwellings where it cannot be connected directly to the main sewer by means of natural downward slope. The use of Sololift2 facilitates the installation of toilets, cabinet showers, washbasins or other facilities at basement, ground or loft level as it pumps the wastewater to the main sewage discharge pipe.

Sololift2 offers the opportunity of installing fixtures such as cabinet showers and toilets at a distance from the main sewage discharge pipe without costly pipe installations.

Sololift2 can be used for the following:

- extra bathrooms in basements or attics
- basement installations of sanitary units below sewer level and also as excellent backflow protection from the main sewer
- low-cost bathrooms in vacation cottages
- added facilities in hotels and guest houses
- bathrooms for the elderly or the disabled
- renovation or modernization of restrooms in offices and other commercial buildings for a limited number of users.

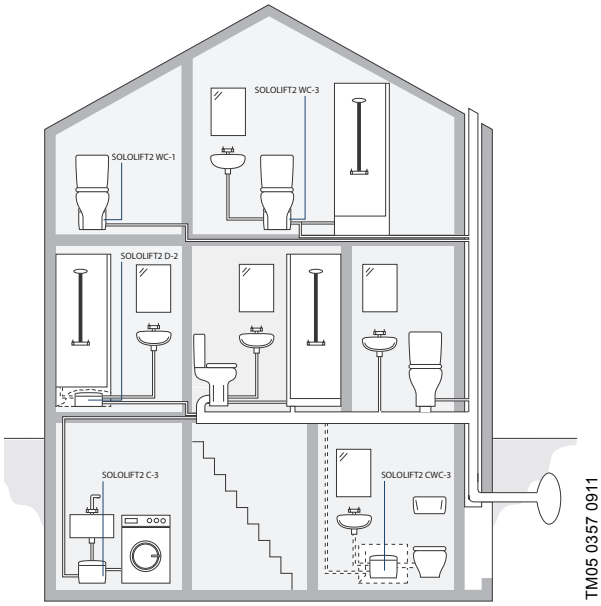

Fig. 1 Examples of applications

Functions

Wastewater from the units connected is led to the Sololift2 lifting station. The pump starts automatically when the liquid level reaches the start level and stops when the level has fallen to the stop level. The start and stop levels depend on the type of Sololift2. See technical data for each of the individual model types.

The tank of all Grundfos Sololift2 lifting stations is made of composite with an easy-to-clean surfaces to minimize sedimentation.

Installed correctly, Sololift2 works automatically. For higher safety requirements, alarm devices are available. See section *Accessories* on page 29 for the individual type.

The design offers unique features and is focused on quick installation as well as easy and clean service. The lifting stations require very little maintenance. We recommend to check the tank regularly, depending on application and how frequently it is used.

Grundfos' high quality requirements ensure durability and long and trouble-free operation.

The individual Sololift2 lifting stations are described on these pages:

Sololift2 WC-1, page 6.

Sololift2 WC-3, page 11.

Sololift2 CWC-3, page 16.

Sololift2 C-3, page 20.

Sololift2 D-2, page 25.

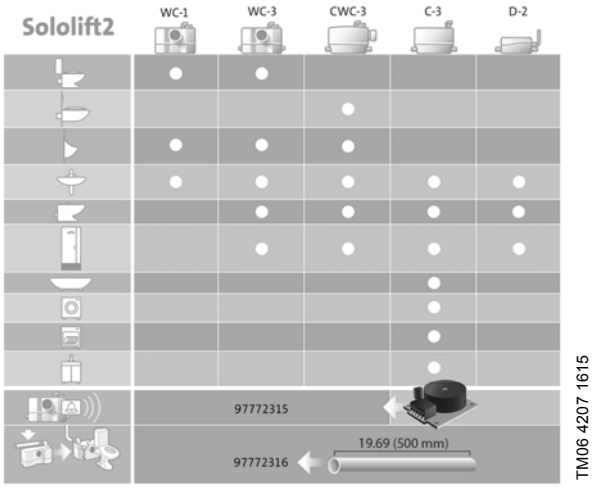

Fig. 2 Overview of Sololift2 lifting stations

Marking and approvals

Description

Sololift2 units are approved according ASME A112.3.4-2013/CSA B45.9-13 and have obtained the following approvals.

APPLICABLE REQUIREMENTS
ASME A 112.3.4-2013 / CSA B45.9-13 - Macerating Toilets Systems and Related Components
CSA Standard C22.2 No 108-14 - Liquid Pumps
CSA Standard C22.2 No. 77-14 - Motors with Inherent Overheating Protection
UL 778-5th Edition - Motor Operated Water Pumps
UL 1004-3 - Thermally Protected Motors

Approvals

C US
MEETS UPC

2. Sololift2 WC-1

Sololift2 WC-1 is a small, compact, ready-to-install automatic lifting station with integrated powerful cutter system. It is suitable for pumping wastewater with feces from private dwellings.

TM06 4288 1815

Fig. 3 Sololift2 WC-1

Applications

Sololift2 WC-1 is suitable for pumping wastewater from a washbasin and a single toilet (with horizontal outlet) containing toilet paper and feces.

Typical applications:

- Basement installations below sewer level.
- In connection with the renovation or modernization of existing buildings where the location may be remote from the main soil pipe so that a natural slope cannot be established, for example attics.

TM05 0358 0911

Fig. 4 Example of application

Features and benefits

Durability and operational reliability

- The powerful motor ensures optimum operational reliability, even when for instance feminine hygiene products are occasionally flushed down the toilet.

Easy installation and replacement

- Adjustable discharge and inlet connections ensure easy installation and replacement.

Easy maintenance and service

- The removable, compact pump-motor unit makes any service job a fast and clean matter.
- No need to disconnect discharge and inlet pipes or to remove the unit from behind the toilet.

Sizing guide

The unit is designed for flush volumes between 1.0 gal and 2.3 gal (4 and 9 liters).

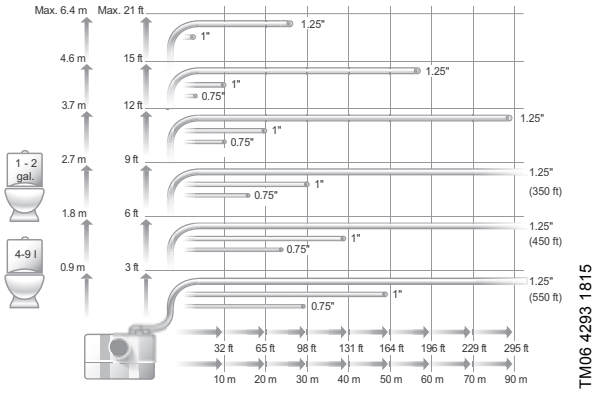

TM06 4293 1815

Fig. 5 Maximum lengths of vertical and horizontal discharge pipes

Figure 5 shows the maximum lengths of vertical and horizontal discharge pipes. The pipe length depends on the pipe diameter and is based on a flow velocity of 2.3 ft/s (0.7 m/s). Four bends, a check valve and an isolating valve have already been taken into account.

Construction features

Sololift2 WC-1

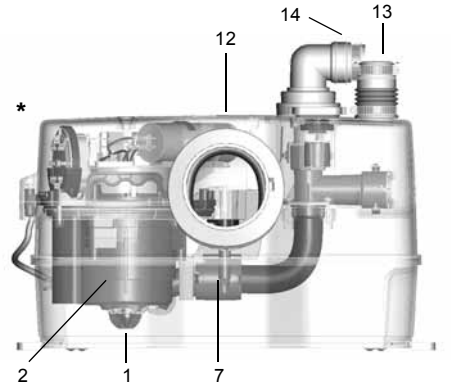

TM05 0371 0911

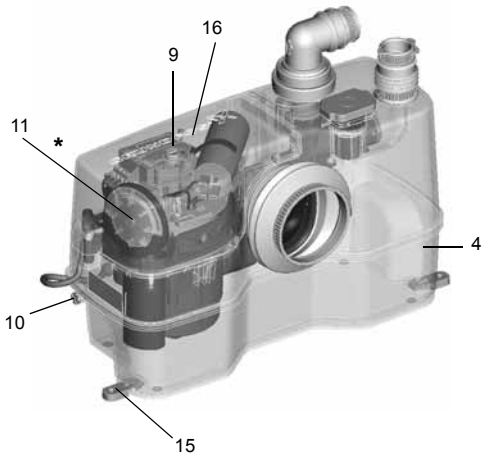

TM05 0371 0911

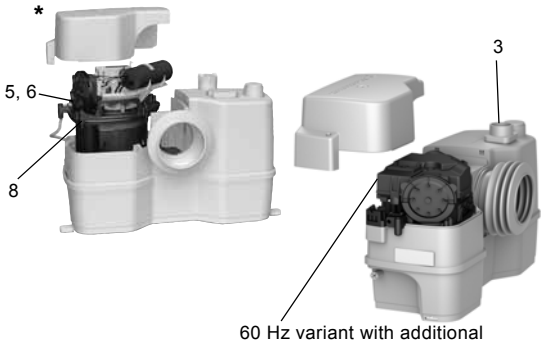

60 Hz variant with additional nonflammable protection cap on electronics and over roof venting connection (Pos. 3).

TM05 0496 1111

Description

Pos.	Operational reliability
1	Cutter The powerful cutter's ability to easily handle feminine hygiene products or similar increases the reliability. The pump has self-venting valve for stable start.
2	Motor The powerful high-torque motor features motor protection via a thermal switch and automatic restart. Three shaft seals and an additional V-ring ensure long operational life.
3	Venting The venting connection for pipes guided over roof.
4	Tank Welded tank design which is pressure-tight up to 8.2 ft (2.5 m) water column.

Pos.	Easy maintenance and service
5	Access to components Design with dry motor for easy and clean service.
6	Compact block unit Pump, motor and controller form a compact block unit which is easy to remove for service and replacement. No need to disconnect the Sololift2 tank and connected pipes when service is required.
7	Auto coupling Self-adjusting auto coupling eases assembly.
8	Screws All important screws are captive screws, which facilitates service work.
9	Anti-blocking Manual anti-blocking function is accessible from outside with a screwdriver, i.e. no need to remove the cover. Disconnect the unit from from power supply, remove a plug on top of the cover, insert the screwdriver, and turn the shaft.
10	Drain connection Separate tank drain function is available by connecting a drain hose.
11	Pressure switch Pressure switch control outside the tank, i.e. no moving parts in the wastewater.

Pos.	Easy installation and replacement
12	Dimensions Very compact dimensions. The position of discharge and inlet connections ensures easy replacement of similar units of other makes. No extra work on pipes required.
13	Inlet Inlet connection at the top.
14	Discharge A turnable 360 ° adapter incorporating a check valve enables vertical or horizontal discharge direction for easy replacement.
15	Feet for floor-mounting Feet for floor-mounting are easy to install.
16	Alarm Slot for an alarm device. Easy retrofitting just by pushing a small printed-circuit board with buzzer into the slot. No additional wires required.

* Picture shows 50 Hz model.

Installation requirements

This section shows an installation example and describes the installation requirements. Installation is done quickly and easily by using flexible hose connectors with several adapter options for almost any pipe diameter.

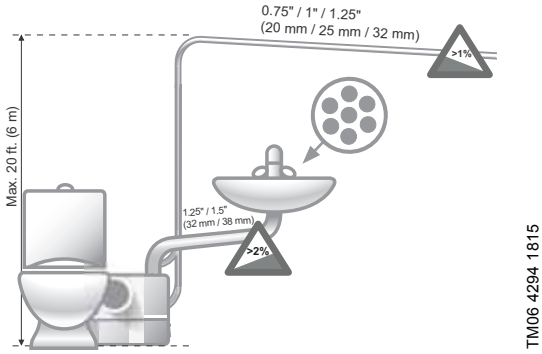

Fig. 6 Example of installation

Note: The first part of the discharge pipe should always be vertical. All horizontal pipes must have a fall of minimum 1 % to the main sewage discharge pipe.

The measurements in fig. 7 must be observed.

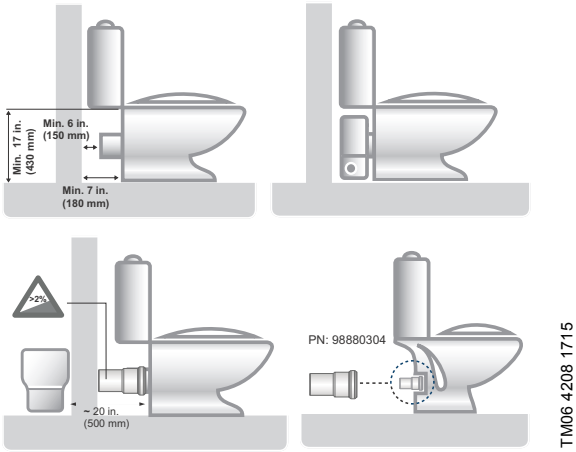

Fig. 7 Measurements to be observed

Sololift2 WC-1 can be installed directly behind the toilet or behind a wall in another room. When a connecting piece is required, the maximum distance to the toilet must not exceed 20 in. (500 mm).

Observe the minimum height and distances in fig. 7 to ensure that the unit is accessible for service.

Toilets with rear outlet (P-trap) are required. Ask your local dealer or Grundfos for support.

Connections

Fig. 8 Horizontal or vertical discharge

The turnable 360 ° discharge adapter can be fitted horizontally or vertically. The adapter incorporates a check valve.

The discharge and inlet connections can be adapted to the following pipe diameters:

Connection	Outer - Ø of pipe					
Inch	**1.050"**	**1.315"**	**1.660"**	**1.9"**	**2.375"**	**4 to 4.5**
Nominal	**0.75" (3/4")**	**1"**	**1.25" (1 1/4")**	**1.5" (1 1/2")**	**2"**	**3.5 to 4**
Flexible discharge elbow	●	●	●	-	-	-
Toilet connections	-	-	-	-	-	●
Possible inlet (top)	-	-	●	●	-	-

Product numbers

Product	Plug	Sales region	Prod. no.
Sololift2 WC-1	90 ° angle (115 V)	North America	98824611

Accessories

Product	Description	Prod. no.
Alarm device 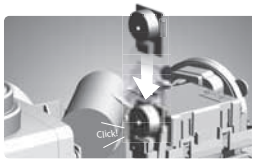 TM05 0367 0911	Acoustic alarm in case of malfunction. Printed-circuit board to be pushed into an internal slot in Sololift2 WC-1.	97772315
Replacement hose TM05 0377 1111	Flexible PVC hose with two clamps and an adapter for the discharge of Sololift2. Dimensions: • Length: 19.68 in. (500 mm) • Inner diameter: ∅1.26 in. (32 mm) • Outer diameter: ∅1.50 in. (38 mm).	97772316
Drain hose 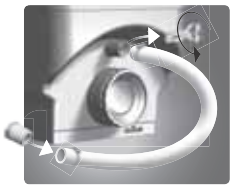 TM05 0370 0911	Flexible PVC hose with two clamps and a plug. Applicable when the Sololift2 tank is to be drained for service. Dimensions: • Length: 19.68 in. (500 mm). • Inner diameter: ∅0.48 in. (12 mm). • Outer diameter: ∅0.57 in. (14.4 mm).	97789093
Connecting pipe 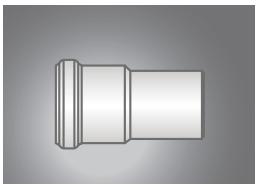 TM06 1041 1514	Connecting pipe: Length: 19.68 in. (500 mm)	98880304

Technical data

Mechanical data

Net weight	16.1 lb (7.3 kg)
Tank volume	2.3 gal (9.0 liters)
Flexible discharge elbow	0.75 in. / 1 in. / 1.25 in.
Toilet connection	∅4 in.
Dimensions of possible inlet	Top ∅1.25 in. / 1.5 in.
Start and stop levels	Start: 2.8 in. (72 mm) above floor level Stop: 2.1 in. (52 mm) above floor level
pH value of the pumped liquid	4-10
Maximum liquid temperature	122 °F (50 °C)
Ambient temperature	41-95 °F (5-35 °C)
Noise level	< 70 dB(A)
Duty class	S3-50 % - 1 min. (30 sec. on; 30 sec. off)

Electrical data

Supply voltage	1 x 115 V, 60 Hz
Power consumption, P1	Max. 750 W
Rated current	6.8 A
Power factor, cos φ	0.87 / 0.92
Speed	3450 rpm
Enclosure class	IP44
Insulation class	F
Power supply cable	Length 4.9 ft (1.5 m), 90 ° angle plug (115 V)

Performance

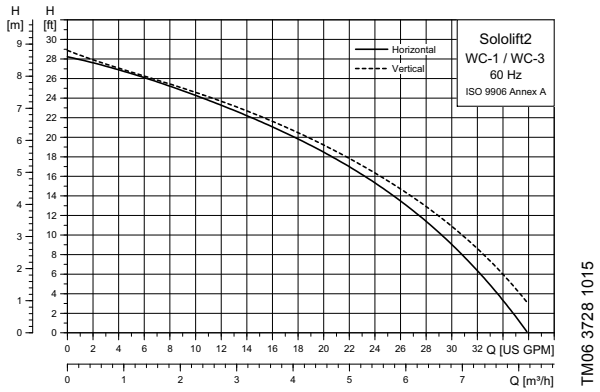

Fig. 9 Performance curves, Sololift2 WC-1 / WC-3

Dimensions

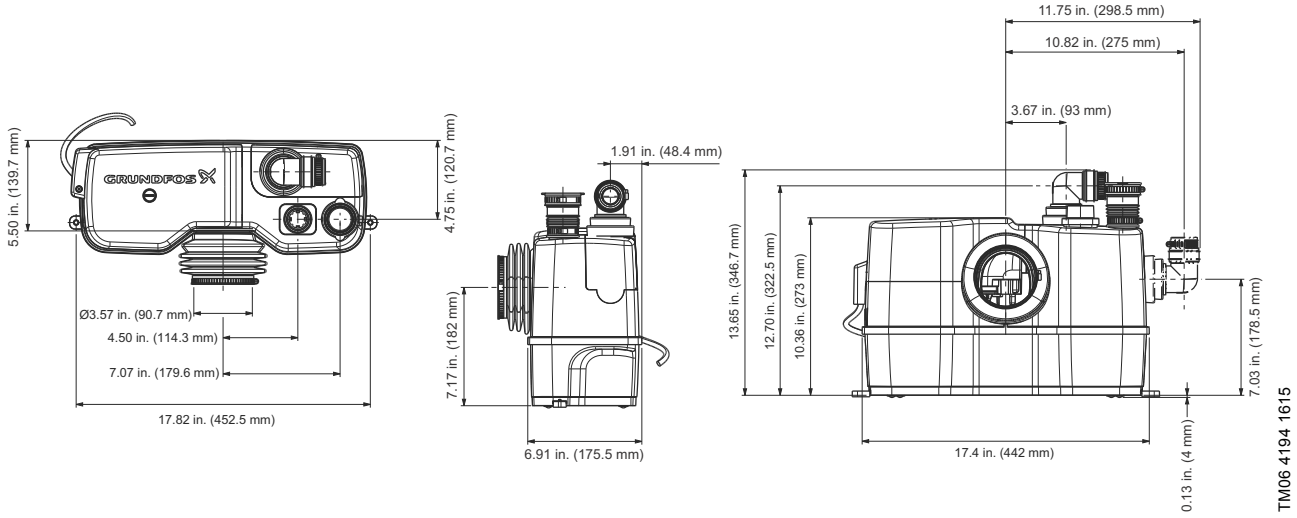

Fig. 10 Dimensional drawings, Sololift2 WC-1

3. Sololift2 WC-3

Sololift2 WC-3 is a small, compact, ready-to-install automatic lifting station with integrated powerful cutter system. It is suitable for pumping wastewater with feces from private dwellings.

TM06 4289 1815

Fig. 11 Sololift2 WC-3

Applications

Sololift2 WC-3 is suitable for pumping wastewater from a single toilet (with horizontal outlet) containing toilet paper and feces, a washbasin, cabinet shower and a bidet or urinal.

Typical applications:

- Basement installations below sewer level.
- In connection with the renovation or modernization of existing buildings where the location may be remote from the main sewage discharge pipe so that a natural slope cannot be established, for example attics.

TM05 0372 0911

Fig. 12 Example of application

Features and benefits

Robustness and operational reliability

- The powerful motor ensures optimum operational reliability, even when for instance feminine hygiene products are occasionally flushed down the toilet.

Easy installation and replacement

- Adjustable discharge and inlet connections ensure easy installation and replacement.

Easy maintenance and service

- The removable, compact pump-motor unit makes any service job a fast and clean matter.
- No need to disconnect discharge and inlet pipes or to remove the unit from behind the toilet.

Sizing guide

The unit is designed for flush volumes between 1.0 gal. and 2.3 gal. (4 and 9 liters).

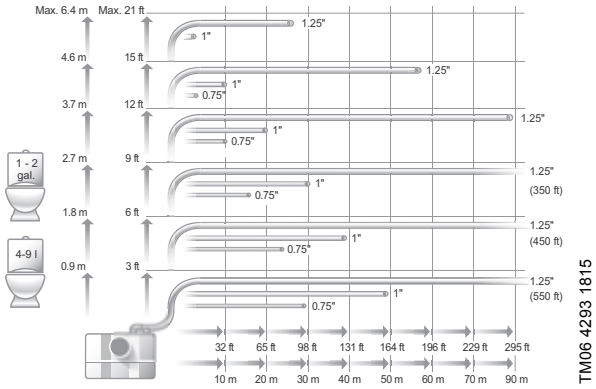

TM06 4293 1815

Fig. 13 Maximum lengths of vertical and horizontal discharge pipes

Figure 13 shows the maximum lengths of vertical and horizontal discharge pipes. The pipe length depends on the pipe diameter and is based on a flow velocity of 2.3 ft/s (0.7 m/s). Four bends, a check valve and an isolating valve have already been taken into account.

Construction features

Sololift2 WC-3	Description	
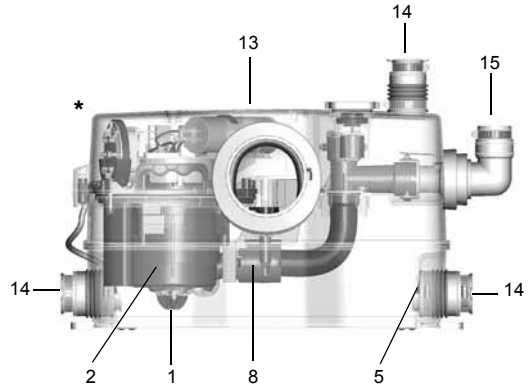 TM05 0480 1111	**Pos.**	**Operational reliability**
	1	Cutter The powerful cutter's ability to easily handle feminine hygiene products or similar increases the reliability. The pump has self-venting valve for stable start.
	2	Motor The powerful high-torque motor features motor protection via a thermal switch and automatic restart. Three shaft seals and an additional V-ring ensure long operational life.
	3	Venting The venting connection for pipes guided over roof.
	4	Tank Welded tank design which is pressure-tight up to 8.2 ft (2.5 m) water column.
	5	Check valves Check valves prevent back- and cross-flow to inlet pipes.
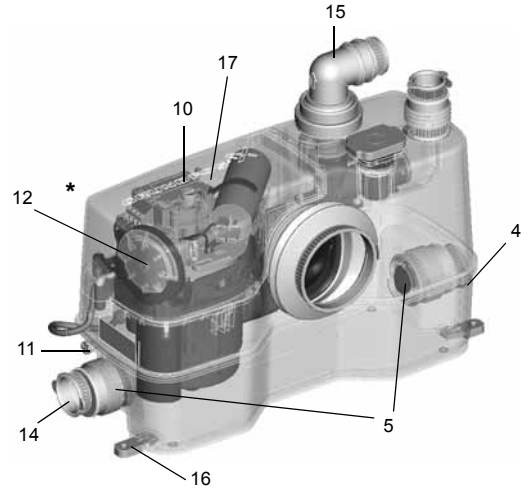 TM05 0507 1111	**Pos.**	**Easy maintenance and service**
	6	Access to components Design with dry motor for easy and clean service.
	7	Compact block unit Pump, motor and controller form a compact block unit which is easy to remove for service and replacement. No need to disconnect the Sololift2 tank and connected pipes when service is required.
	8	Auto coupling Self-adjusting auto coupling eases assembly.
	9	Screws All important screws are captive screws, which facilitates service work.
	10	Anti-blocking Manual anti-blocking function is accessible from outside with a screwdriver, i.e. no need to remove the cover. Disconnect the unit from from power supply, remove a plug on top of the cover, insert the screwdriver, and turn the shaft.
	11	Drain connection Separate tank drain function is available by connecting a drain hose.
	12	Pressure switch Pressure switch control outside the tank, i.e. no moving parts in the wastewater.
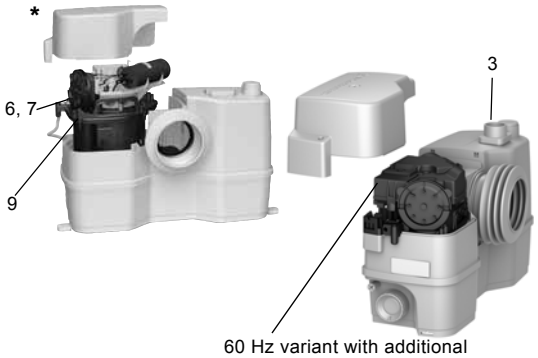 60 Hz variant with additional nonflammable protection cap on electronics and over roof venting connection (Pos. 3). TM05 0506 1111	**Pos.**	**Easy installation and replacement**
	13	Dimensions Very compact dimensions. The position of discharge and inlet connections ensures easy replacement of similar units of other makes. No extra work on pipes required.
	14	Inlet Eccentric, height-adjustable connectors for side inlets, i.e. in addition to the inlet at the top of the tank.
	15	Discharge A turnable 360 ° adapter incorporating a check valve enables vertical or horizontal discharge direction for easy replacement.
	16	Feet for floor-mounting Feet for floor-mounting are easy to install.
	17	Alarm Slot for an alarm device. Easy retrofitting just by pushing a small printed-circuit board with buzzer into the slot. No additional wires required.

* Picture shows 50 Hz model.

Installation requirements

This section shows an installation example and describes the installation requirements. Installation is done quickly and easily by using flexible hose connectors with several adapter options for almost any pipe diameter.

The start/stop levels are made for the modern flat shower trays.

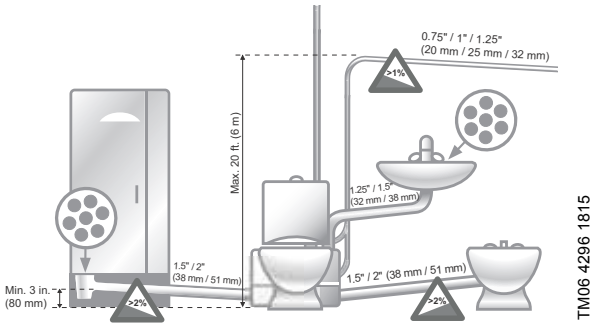

Fig. 14 Example of installation

Note: The first part of the discharge pipe should be vertical. All horizontal pipes must have a fall of minimum 1 % to the main sewage discharge pipe.

The distances in fig. 15 must be observed.

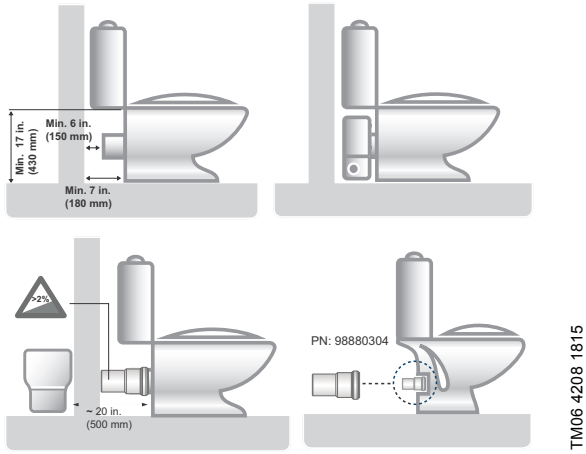

Fig. 15 Distances to be observed

Sololift2 WC-3 can be installed directly behind the toilet or behind a wall in another room. When a connecting piece is required, the maximum distance to the toilet must not exceed 20 in. (500 mm).

Observe the minimum height and distances in fig. 15 to ensure that the unit is accessible for service.

Toilets with rear outlet (P-trap) are required. Ask your local dealer or Grundfos for support.

Connections

Fig. 16 Horizontal or vertical discharge

The turnable 360 ° discharge adapter can be fitted horizontally or vertically. The adapter incorporates a check valve.

The discharge and inlet connections can be adapted to the following pipe diameters:

Connection	Outer - Ø of pipe					
Inch	**1.050"**	**1.315"**	**1.660"**	**1.9"**	**2.375"**	**4 to 4.5**
Nominal	**0.75" (3/4")**	**1"**	**1.25" (1 1/4")**	**1.5" (1 1/2")**	**2"**	**3.5 to 4**
Flexible discharge elbow	●	●	●	-	-	-
Toilet connections	-	-	-	-	-	●
Possible inlet (side)	-	-	●	-	●	-
Possible inlet (top)	-	-	●	●	-	-

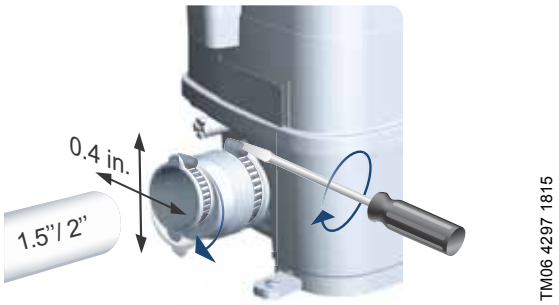

Fig. 17 Height and side alignment possible when using ∅1.5" or 2" inlet pipes

Product numbers

Product	Plug	Sales region	Prod. no.
Sololift2 WC-3	90 ° angle (115 V)	North America	98824613

Accessories

Product	Description	Prod. no.
Alarm device 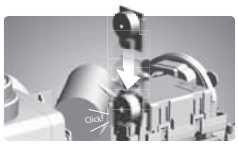 TM05 0367 0911	Acoustic alarm in case of malfunction. Printed-circuit board to be pushed into an internal slot in Sololift2 WC-3.	97772315
Replacement hose TM05 0377 1111	Flexible PVC hose with two clamps and an adapter for the discharge of Sololift2. Dimensions: • Length: 19.68 in. (500 mm). • Inner diameter: ∅1.26 in. (32 mm). • Outer diameter: ∅1.50 in. (38 mm).	97772316
Drain hose 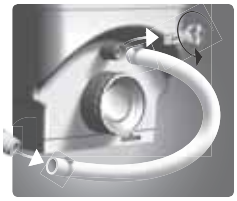 TM05 0370 0911	Flexible PVC hose with two clamps and a plug. Applicable when the Sololift2 tank is to be drained for service. Dimensions: • Length: 19.68 in. (500 mm). • Inner diameter: ∅0.48 in. (12 mm). • Outer diameter: ∅0.57 in. (14.4 mm).	97789093
Connecting pipe 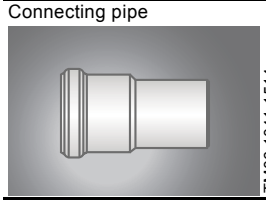 TM06 1041 1514	Connecting pipe: Length 19.68 in. (500 mm)	98880304

Technical data

Mechanical data

Net weight	16.1 lb (7.3 kg)
Tank volume	2.3 gal (9.0 liters)
Flexible discharge elbow	∅0.75 in. / 1 in. / 1.25 in.
Toilet connection	∅4 in.
Dimensions of possible inlet	Side Ø1.25 in. / 2 in. Top ∅1.25 in. / 1.5 in.
Start and stop levels	Start: 2.8 in. (72 mm) above floor level Stop: 2.1 in. (52 mm) above floor level
pH value of the pumped liquid	4-10
Maximum liquid temperature	122 °F (50 °C)
Ambient temperature	41-95 °F (5-35 °C)
Noise level	< 70 dB(A)
Duty class	S3-50 % - 1 min. (30 sec. on; 30 sec. off)

Electrical data

Supply voltage	1 x 115 V, 60 Hz
Power consumption, P1	Max. 750 W
Rated current	6.8 A
Power factor, cos φ	0.87 / 0.92
Speed	3450 rpm
Enclosure class	IP44
Insulation class	F
Power supply cable	Length 4.9 ft (1.5 m), 90 ° angle plug (115 V)

Performance

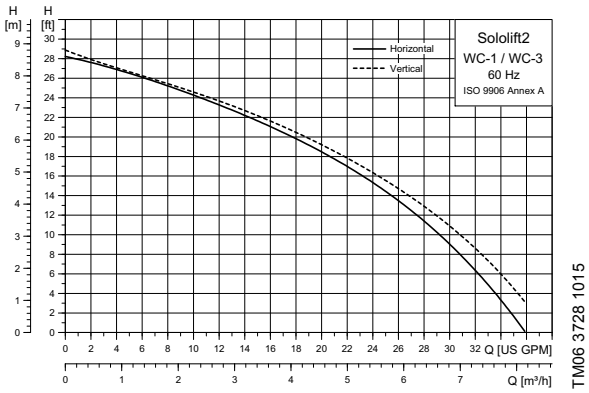

Fig. 18 Performance curves, Sololift2 WC-1 / WC-3

Dimensions

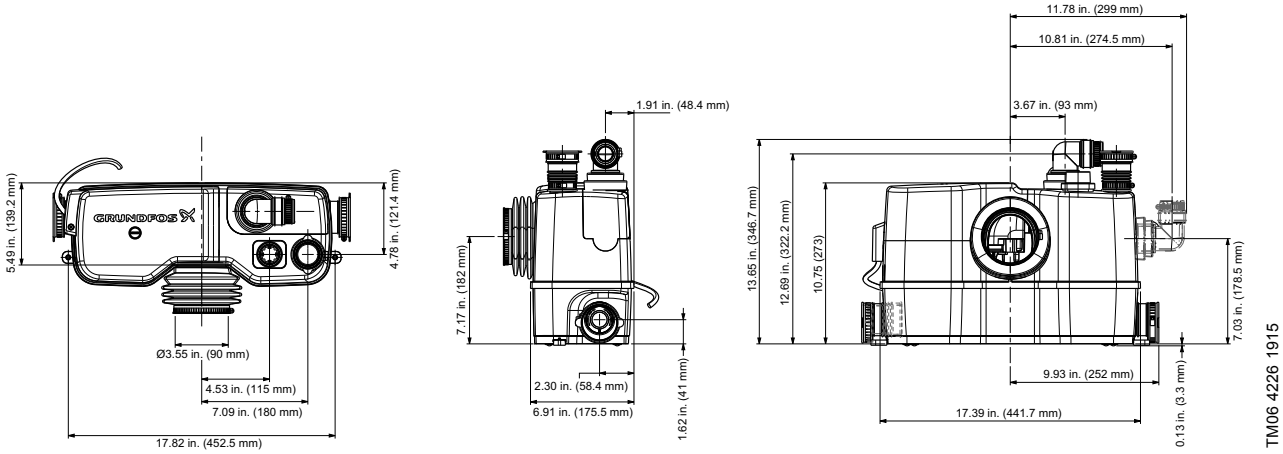

Fig. 19 Dimensional drawings, Sololift2 WC-3

4. Sololift2 CWC-3

Sololift2 CWC-3 is a slim, compact, ready-to-install automatic lifting station with integrated powerful cutter system. It is suitable for pumping wastewater with feces from private dwellings.

The unit is specially designed for front-wall installations.

TM06 4290 1815

Fig. 20 Sololift2 CWC-3

Applications

Sololift2 CWC-3 is suitable for pumping wastewater from a single wall-hung toilet containing toilet paper and feces, washbasin, cabinet shower and a bidet or urinal.

Typical applications:

- Basement installations below sewer level.
- In connection with the renovation or modernization of existing buildings where the location may be remote from the main sewage discharge pipe so that a natural slope cannot be established, for example attics.

TM05 0381 0911

Fig. 21 Example of application

Features and benefits

Robustness and operational reliability

- The powerful motor ensures optimum operational reliability, even when for instance feminine hygiene products are occasionally flushed down the toilet.

Easy installation and replacement

- Adjustable discharge and inlet connections ensure easy installation and replacement.

Easy maintenance and service

- The removable, compact pump-motor unit makes any service job a fast and clean matter.
- No need to disconnect discharge and inlet pipes or to remove the unit from behind the toilet.

Sizing guide

The unit is designed for flush volumes between 1 gal. and 2.3 gal. (4 and 9 liters).

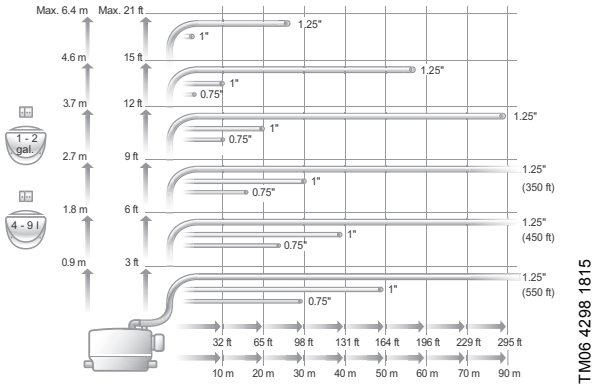

TM06 4298 1815

Fig. 22 Maximum lengths of vertical and horizontal discharge pipes

Figure 22 shows the maximum lengths of vertical and horizontal discharge pipes. The pipe length depends on the pipe diameter and is based on a flow velocity of 2.3 ft/s (0.7 m/s). Four bends, a check valve and an isolating valve have already been taken into account.

Construction features

Sololift2 CWC-3

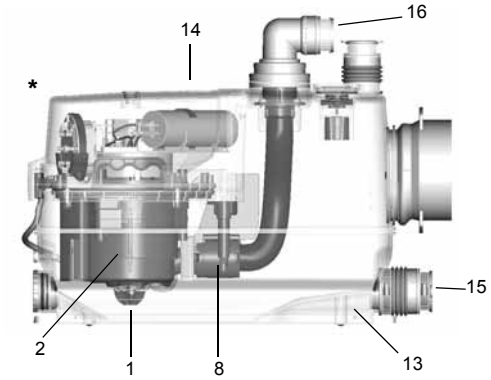

TM05 0489 1111

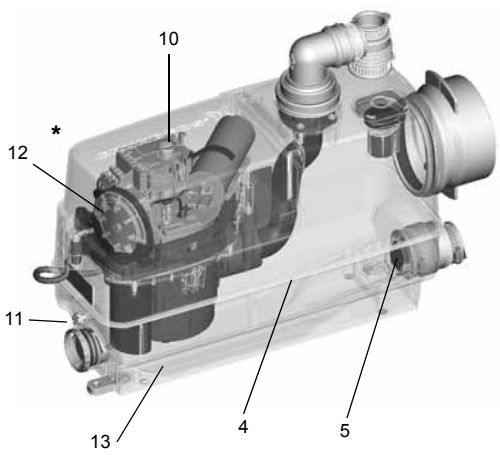

TM05 0490 1111

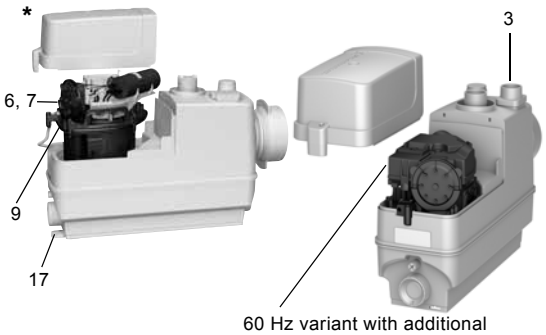

60 Hz variant with additional nonflammable protection cap on electronics and over roof venting connection. (Pos. 3).

TM05 0855 1711

Description

Pos.	Operational reliability
1	Cutter The powerful cutter's ability to easily handle feminine hygiene products or similar increases the reliability. The pump has self-venting valve for stable start.
2	Motor The powerful high-torque motor features motor protection via a thermal switch and automatic restart. Three shaft seals and an additional V-ring ensure long operational life.
3	Venting The venting connection for pipes guided over roof.
4	Tank Welded tank design which is pressure-tight up to 8.2 ft (2.5 m) water column.
5	Non-return valves Non-return valves prevent back- and cross-flow to inlet pipes.
Pos.	**Easy maintenance and service**
6	Access to components Design with dry motor for easy and clean service.
7	Compact block unit Pump, motor and controller form a compact block unit which is easy to remove for service and replacement. No need to disconnect the Sololift2 tank and connected pipes when service is required.
8	Auto coupling Self-adjusting auto coupling eases assembly.
9	Screws All important screws are captive screws, which facilitates service work.
10	Anti-blocking Manual anti-blocking function is accessible from outside with a screwdriver, i.e. no need to remove the cover. Disconnect the unit from from power supply, remove a plug on top of the cover, insert the screwdriver, and turn the shaft.
11	Drain connection Separate tank drain function is available by connecting a drain hose.
12	Pressure switch Pressure switch control outside the tank, i.e. no moving parts in the wastewater.
13	Bottom Bottom design with strong chamfer to prevent sedimentation in corners.
Pos.	**Easy installation and replacement**
14	Slim design Slim design for front-wall installation with a wall-hung toilet.
15	Inlet Eccentric, height-adjustable connectors for side inlets, i.e. in addition to the inlet at the top of the tank.
16	Discharge Horizontal 360 ° turnable discharge incorporating a check valve.
17	Feet for floor-mounting Feet for floor-mounting are easy to install.

* Picture shows 50 Hz model.

Installation requirements

This section shows an installation example and describes the installation requirements. Installation is done quickly and easily by using flexible hose connectors with several adapter options for almost any pipe diameter.

The start/stop levels are made for the modern flat shower trays.

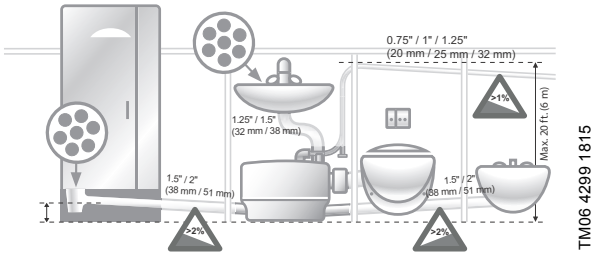

Fig. 23 Example of installation

Note: The first part of the discharge pipe should be vertical. All horizontal pipes must have a fall of minimum 1 % to the main sewage discharge pipe.

The measurements in fig. 24 must be observed.

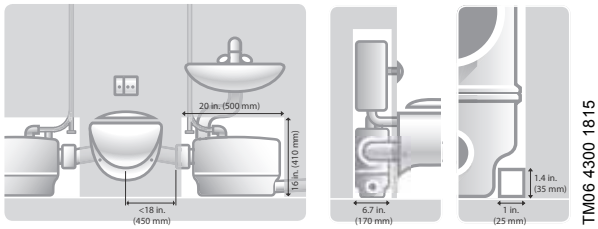

Fig. 24 Measurements to be observed

Sololift2 CWC-3 must be installed as close as possible (< 17.72 in. (450 mm)) to the wall-hung toilet in a front-wall installation or similar.

Observe the minimum width of front wall and tile frame sizes in fig. 24 to ensure that the unit is accessible for service.

Connections

The turnable 360 ° discharge adapter can be fitted horizontally or vertically. The adapter incorporates a check valve.

The discharge and inlet connections can be adapted to the following pipe diameters:

Connection	Outer - Ø of pipe					
Inch	**1.050"**	**1.315"**	**1.660"**	**1.9"**	**2.375"**	**4 to 4.5**
Nominal	**0.75" (3/4")**	**1"**	**1.25" (1 1/4")**	**1.5" (1 1/2")**	**2"**	**3.5 to 4**
Flexible discharge elbow	●	●	●	-	-	-
Toilet connections	-	-	-	-	-	●
Possible inlet (side)	-	-	●	-	●	-
Possible inlet (top)	-	-	●	●	-	-

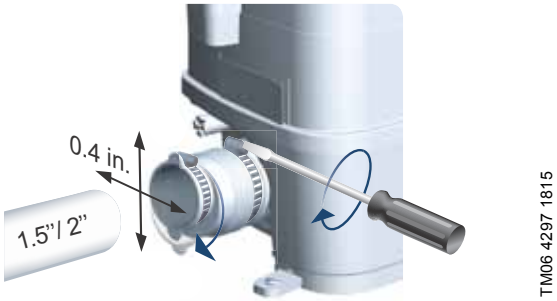

Fig. 25 Height and side alignment possible when using Ø1.5" or 2" inlet pipes

Product numbers

Product	Plug	Sales region	Prod. no.
Sololift2 CWC-3	90 ° angle plug	North America	98824615

Accessories

Product	Description	Prod. no.
Alarm device 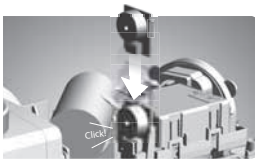 TM05 0367 1111	Acoustic alarm in case of malfunction. Printed-circuit board to be pushed into an internal slot in Sololift2 CWC-3.	97772315
Replacement hose TM05 0377 1111	Flexible PVC hose with two clamps and an adapter for the discharge of Sololift2. Dimensions: • Length: 19.68 in. (500 mm). • Inner diameter: Ø1.26 in. (32 mm). • Outer diameter: Ø1.50 in. (38 mm).	97772316

Technical data

Mechanical data

Net weight	15.7 lb (7.1 kg)
Tank volume	2.3 gal. (9.0 liters)
Flexible discharge elbow	∅0.75 in. / 1 in. / 1.25 in.
Toilet connection	∅4 in.
Dimensions of possible inlet	Side ∅1.25 in. / 2 in. Top ∅1.25 in. / 1.5 in.
Start and stop levels	Start: 2.8 in. (72 mm) above floor level Stop: 2.1 in. (52 mm) above floor level
pH value of the pumped liquid	4-10
Maximum liquid temperature	122 °F (50 °C)
Ambient temperature	41-95 °F (5-35 °C)
Noise level	< 70 dB(A) to 12050-2
Duty class	S3-50 % - 1 min. (30 sec. on; 30 sec. off)

Electrical data

Supply voltage	115 V, 60 Hz
Power consumption, P1	Max. 750 W
Rated current	6.8 A
Power factor, cos φ	0.87 / 0.92
Speed	3450 rpm
Enclosure class	IP44
Insulation class	F
Power supply cable	Length 4.9 ft (1.5 m) 90 ° angle plug (115 V)

Performance

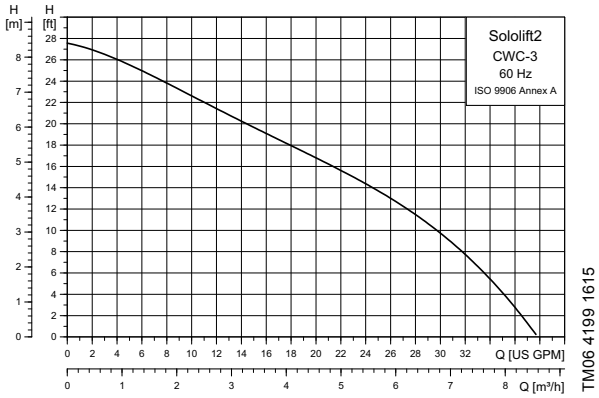

Fig. 26 Performance curves, Sololift2 CWC-3

Dimensions

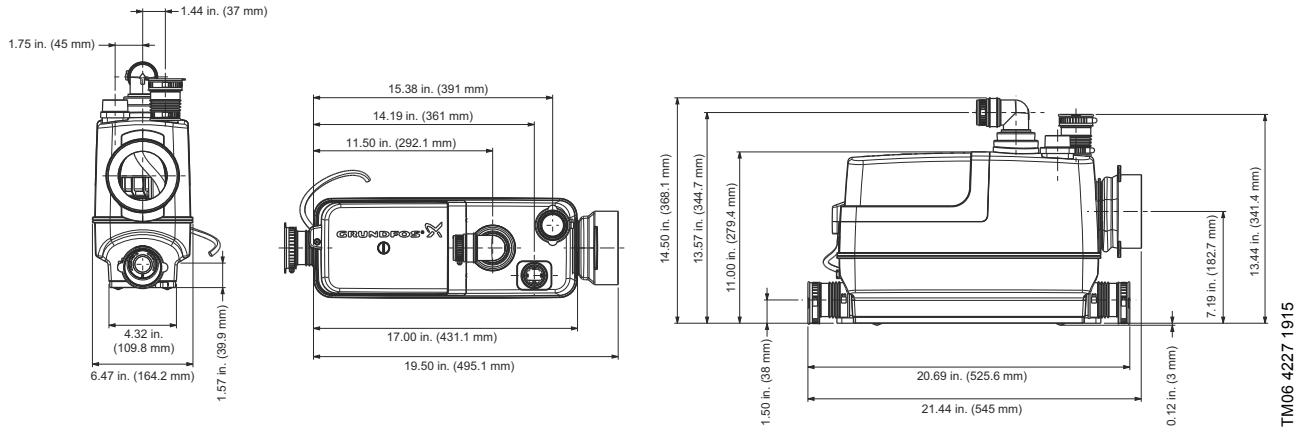

Fig. 27 Dimensional drawings, Sololift2 CWC-3

5. Sololift2 C-3

Sololift2 C-3 is a small, compact, ready-to-install automatic lifting station. It is suitable for pumping grey wastewater without feces from any kind of building.

TM06 4230 1715

Fig. 28 Sololift2 C-3

Applications

Sololift2 C-3 is suitable for pumping grey wastewater from a washing machine, dishwasher, bath tub, cabinet shower, washbasin or kitchen sink. The unit is designed for front-wall installations. The professional design enables handling of wastewater at temperatures up to 167 °F (75 °C) during continuous operation and up to 194 °F (90 °C) for up to 30 minutes.

Typical applications:

- Basement installations below sewer level.
- In connection with the renovation or modernization of existing buildings where the location may be remote from the main sewage discharge pipe so that a natural slope cannot be established, for example attics.

TM05 0388 0911

Fig. 29 Example of application

Features and benefits

Robustness and operational reliability

- The powerful motor ensures optimum operational reliability when pumping grey wastewater at temperatures up to 90 °F (32 °C).

Easy installation and replacement

- Height-adjustable discharge and inlet connections ensure easy installation and replacement.
- Two selectable levels fit any application, and the slim design enables installation in confined spaces.

Easy maintenance and service

- The removable, compact pump-motor unit makes any service job a fast and clean matter.
- No need to disconnect discharge and inlet pipes or to remove the unit for service.

Sizing guide

As Sololift2 C-3 is used with several combinations of units, it is necessary to consider the maximum performance of the unit in relation to different discharge pipe diameters at a minimum self-cleaning velocity of 2.3 ft/s (0.7 m/s).

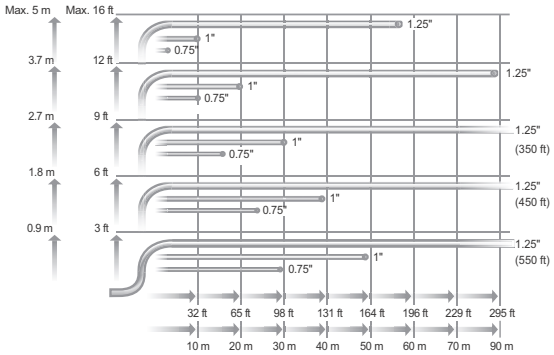

TM06 4225 1715

Fig. 30 Pipe length and height in relation to inner pipe diameter and required discharge capacity

Figure 30 shows the maximum lengths and heights of discharge pipes in meters in relation to inner pipe diameter and discharge capacity of the unit. To ensure optimum operation, the total inflow must not exceed the discharge capacity stated in the table, depending on pipe diameter, height and length. Four bends, a check valve and an isolating valve have already been taken into account.

If the discharge capacity exceeds 0.4 gal/s (1.5 l/s), the noise level may increase. We recommend to choose a pipe diameter that ensures a discharge capacity below 0.4 gal/s (1.5 l/s), if possible, when no discharge capacity above 0.4 gal/s (1.5 l/s) is required.

Construction features

Sololift2 C-3

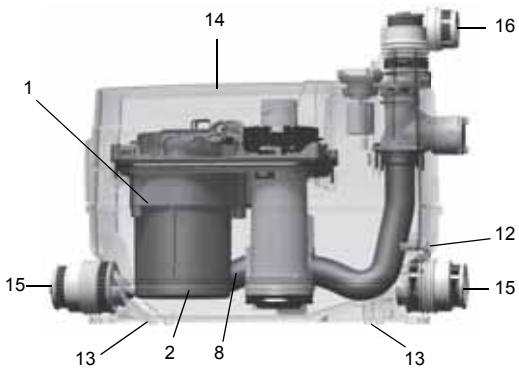

TM05 0494 1111

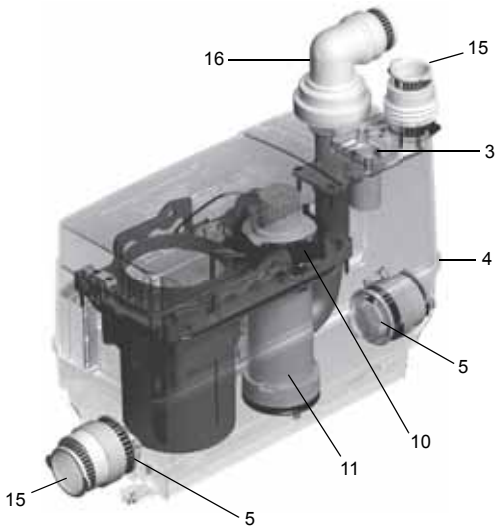

TM05 0487 1111

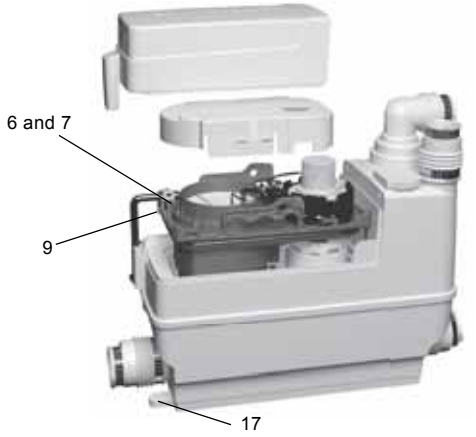

TM05 0495 1111

Description

Pos.	Operational reliability
1	Motor The powerful motor enables pumping of grey wastewater at temperatures up to 194 °F (90 °C) from domestic and commercial washing machines and dishwashers. Motor protection by thermal switch with automatic restart. Three shaft seals and an additional V-ring ensure long operational life.
2	Free passage Vortex pump with a free passage of 0.79 in. (20 mm) and internal self-venting valve for stable start.
3	Venting valve Venting valve with carbon filter and overflow protection. Possibility of connecting a vent pipe, for example over roof at position 15.
4	Tank Welded tank design which is pressure-tight up to 16.4 ft (5 m) water column.
5	Check valves Check valves prevent back- and cross-flow to inlet pipes.
Pos.	**Easy maintenance and service**
6	Access to components Design with dry motor for easy and clean service.
7	Compact block unit Pump, motor and controller form a compact block unit which is easy to remove for service and replacement. No need to disconnect the Sololift2 tank and connected pipes when service is required.
8	Auto coupling Self-adjusting auto coupling eases assembly.
9	Screws All important screws are captive screws, which facilitates service work.
10	Level switch The level switch can be removed without getting into contact with the inside of the tank.
11	Two start levels Two start levels available, i.e. a low start level which is suitable for modern flat shower trays and a higher start level which is suitable for the inflow from a washing machine or bath tub. Simple level adjustment by a turning knob.
12	Drain connection Separate tank drain function is available by connecting a drain hose.
13	Bottom Bottom design with strong chamfer to prevent sedimentation in corners.
Pos.	**Easy installation and replacement**
14	Dimensions Very compact dimensions. The position of discharge and inlet connections ensures easy replacement of similar units of other makes. No extra work on pipes required.
15	Inlet Eccentric, height-adjustable connectors for side inlets, i.e. in addition to the inlet at the top of the tank.
16	Discharge A turnable 360 ° adapter incorporating a check valve enables vertical or horizontal discharge direction for easy replacement.
17	Feet for floor-mounting Feet for floor-mounting are easy to install.

Installation requirements

This section shows installation examples and describes the installation requirements. Installation is done quickly and easily by using flexible hose connectors with several adapter options for almost any pipe diameter.

The start/stop levels are made for the modern flat shower trays and for washing machines or dishwasher with more effective pump volume.

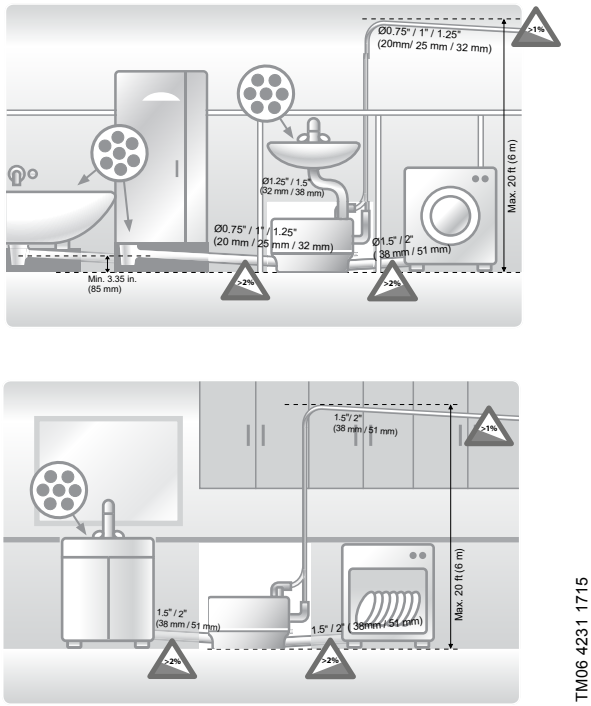

TM06 4231 1715

Fig. 31 Examples of installation

Note: The first part of the discharge pipe should be vertical. All horizontal pipes must have a fall of minimum 1 % to the main sewage discharge pipe.

The measurements in fig. 32 must be observed.

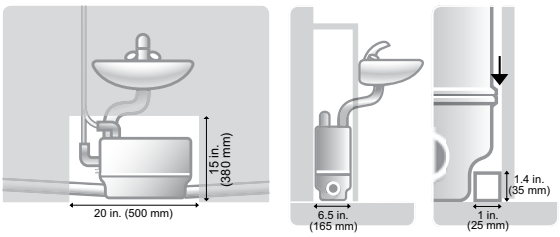

TM06 4232 1715

Fig. 32 Measurements to be observed

When the unit is located inside a wall or in a floor unit, observe the minimum measurements to ensure that the unit can be inspected and is accessible for service.

The start level of the float switch can be adjusted (see pos. 3, fig. 33) with a turnable knob without removing the whole switch from the tank. The preset higher start level optimizes effective pump volume and performance according to higher peak inlet from washing machine, dishwasher or bath. And a low start level to connect modern flat shower traps. The float switch can also be removed for inspection and cleaning, if necessary. The switch is fixed by bayonet joint (see pos. 2, fig. 33). Pos. 1 symbolizes the two covers, the motor and the nonflammable cover. Pos. 4 indicates to the motor unit.

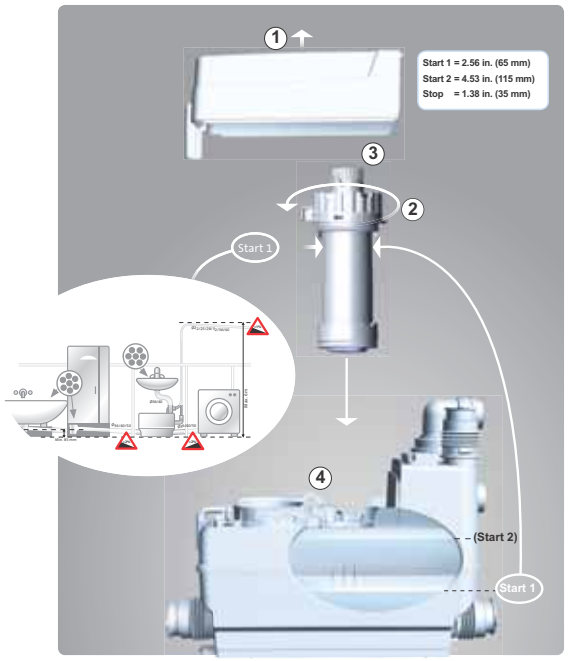

TM06 4749 2815

Fig. 33 Removable float switch (2) with easy level adjustment by turnable knob (3)

Connections

TM05 0363 0911

Fig. 34 Horizontal or vertical discharge

The turnable 360 ° discharge adapter can be fitted horizontally or vertically. The adapter incorporates a check valve.

The discharge and inlet connections can be adapted to the following pipe diameters:

Connection	Outer - ∅ of pipe				
Inch	**1.050"**	**1.315"**	**1.660"**	**1.9"**	**2.375"**
Nominal	**0.75" (3/4")**	**1"**	**1.25" (1 1/4")**	**1.5" (1 1/2")**	**2"**
Flexible discharge elbow	●	●	●	-	-
Possible inlet (side)	-	-	●	-	●
Possible inlet or venting over roof (top)	-	-	●	●	-

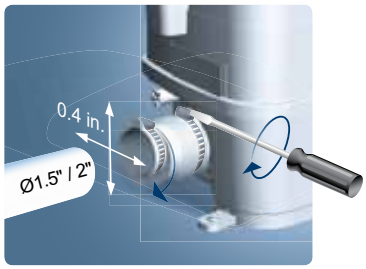

TM06 4234 1715

Fig. 35 Height and side alignment possible when using ∅1.5" or 2" inlet pipes

Product numbers

Product	Plug	Sales region	Prod. no.
Sololift2 C-3	90 ° angle plug	North America	98824620

Accessories

Product	Description	Prod. no.
Replacement hose TM05 0377 1111	Flexible PVC hose with two clamps and an adapter for the discharge of Sololift2. Dimensions: • Length: 19.68 in. (500 mm). • Inner diameter: ∅1.26 in. (32 mm). • Outer diameter: ∅0.57 in. (38 mm).	97772316

Technical data

Mechanical data

Net weight	14.5 lb (6.6 kg)
Tank volume	1.5 gal. (5.7 liters)
Flexible discharge elbow	∅0.75 in. / 1 in. / 1.25 in.
Dimensions of possible inlet	Side ∅1.25 in. / 2 in. Top ∅1.25 in. / 1.5 in.
Start and stop levels	Start level 1: 2.5 in. (65 mm) above floor level Start level 2: 4.5 in. (115 mm) above floor level Stop level: 1.4 in. (35 mm) above floor level
pH value of the pumped liquid	4-10
Maximum liquid temperature	167 °F (75 °C) continuously 194 °F (90 °C) for 30 minutes
Ambient temperature	41-95 °F (5-35 °C)
Noise level	< 70 dB(A)
Duty class	S3-50 % - 1 min. (30 sec. on; 30 sec. off)

Electrical data

Supply voltage	115 V, 60 Hz
Power consumption, P1	Max. 650 W
Rated current	6.0 A
Power factor, cos φ	0.66 / 0.90
Speed	3450 rpm
Enclosure class	IP44
Insulation class	F
Power supply cable	Length 4.9 ft (1.5 m) 90 ° angle plug (115 V)

Performance

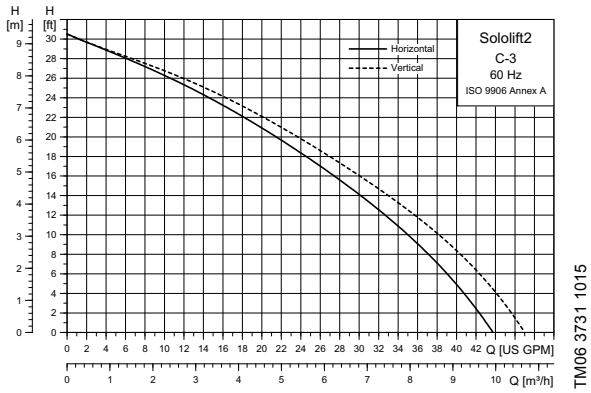

Fig. 36 Performance curves, Sololift2 C-3

Dimensions

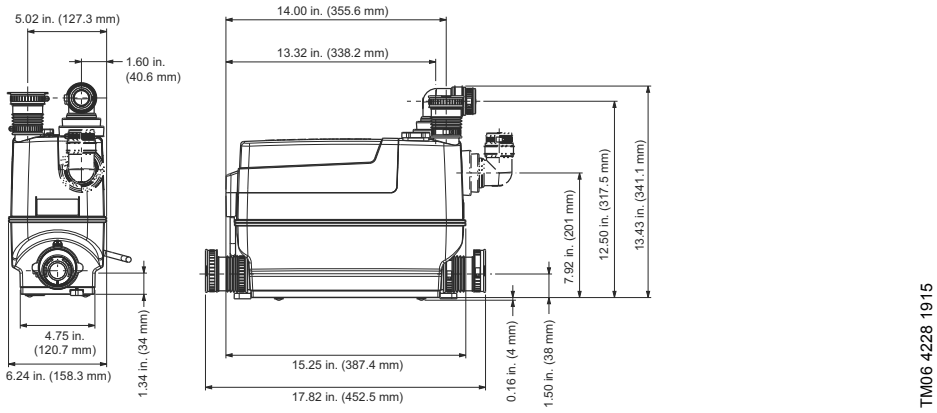

Fig. 37 Dimensional drawings, Sololift2 C-3

6. Sololift2 D-2

Sololift2 D-2 is a small, compact, ready-to-install automatic lifting station. It is suitable for pumping grey wastewater without feces from any kind of building.

TM06 4291 1815

Fig. 38 Sololift2 D-2

Applications

Sololift2 D-2 is suitable for pumping grey wastewater from a washbasin, cabinet shower or bidet. The unit is designed for front-wall installation or installation in a cabinet under a sink.

Typical applications:

- Basement installations below sewer level.
- In connection with the renovation or modernization of existing buildings where the location may be remote from the main sewage discharge pipe so that a natural slope cannot be established, for example attics.

TM05 0400 0911

Fig. 39 Example of application

Features and benefits

Robustness and operational reliability

- The powerful motor, crankcase and shaft in contact with wastewater are made of stainless steel.

Easy installation and replacement

- Slim design for installation in confined spaces.

Easy maintenance and service

- The removable, compact pump-motor unit makes any service job a fast and clean matter.
- No need to disconnect discharge and inlet pipes or to remove the unit for service.

Sizing guide

As Sololift2 D-2 is used with several combinations of units, it is necessary to consider the maximum performance of the unit in relation to different discharge pipe diameters at a minimum self-cleaning velocity of 2.3 ft/s (0.7 m/s).

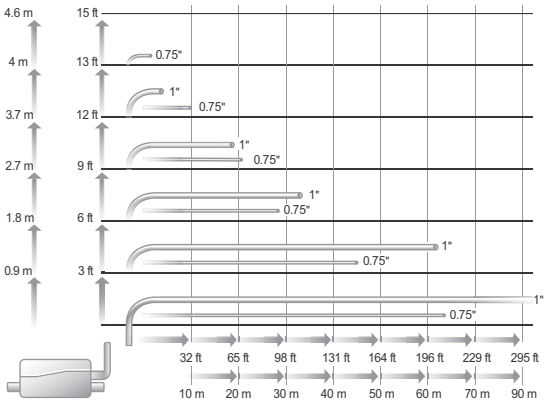

TM06 4223 1715

Fig. 40 Pipe length and height in relation to inner pipe diameter and required discharge capacity

Figure 40 shows the maximum lengths and heights of discharge pipes in meters in relation to inner pipe diameter and discharge capacity of the unit. To ensure optimum operation, the total inflow must not exceed the discharge capacity stated in the table, depending on pipe diameter, height and length. Four bends, a check valve and an isolating valve have already been taken into account.

Construction features

Sololift2 D-2

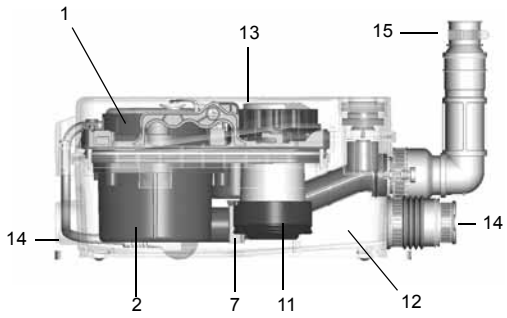

TM05 0399 1111

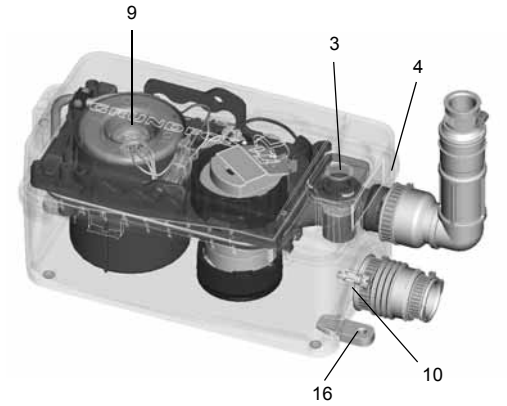

TM05 0492 1111

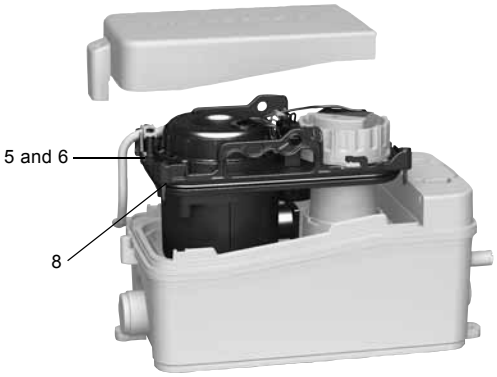

TM05 0493 1111

Description

Pos.	Operational reliability
1	Motor The powerful motor enables pumping of grey wastewater. Motor protection by thermal switch with automatic restart. Three shaft seals ensure long operational life.
2	Free passage Pump with a free passage of 0.4 in. (10 mm) and internal self-venting valve for stable start.
3	Venting valve Venting valve with carbon filter and overflow protection. Possibility of connecting a vent pipe, for example over roof.
4	Tank Welded tank design which is pressure-tight up to 8.2 ft (2.5 m) water column.
Pos.	**Easy maintenance and service**
5	Access to components Design with dry motor for easy and clean service.
6	Compact block unit Pump, motor and controller form a compact block unit which is easy to remove for service and replacement. Other components can be replaced as single parts. No need to disconnect the Sololift2 tank and connected pipes when service is required.
7	Auto coupling Self-adjusting auto coupling eases assembly.
8	Screws All important screws are captive screws, which facilitates service work.
9	Anti-blocking Manual anti-blocking function for deblocking of the motor. No dismantling required.
10	Drain connection Separate tank drain function is available by connecting a drain hose.
11	Level switch Level switch with low start level which is suitable for modern flat shower trays. The level switch can be removed without getting into contact with the inside of the tank. All electrical parts are positioned outside the tank.
12	Bottom Bottom design with strong chamfer to prevent sedimentation in corners.
Pos.	**Easy installation and replacement**
13	Slim design Very slim design that fits into the smallest cabinets/cupboards, for example under a washbasin.
14	Connecting pieces Two connecting pieces for side inlets.
15	Discharge Vertical, turnable discharge incorporating a check valve.
16	Feet for floor-mounting Feet for floor-mounting are easy to install.

Installation requirements

This section shows an installation example and describes the installation requirements. Installation is done quickly and easily by using flexible hose connectors with two adapter options to the pipe diameters.

The start/stop levels are made for the modern flat shower trays.

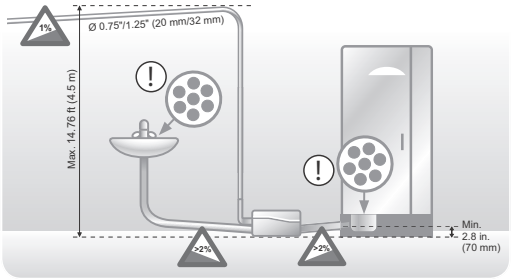

TM06 4222 1715

Fig. 41 Example of installation

Note: The first part of the discharge pipe should be vertical. All horizontal pipes must have a fall of minimum 1 % to the main sewage discharge pipe.

The measurements in fig. 41 and fig. 42 must be observed.

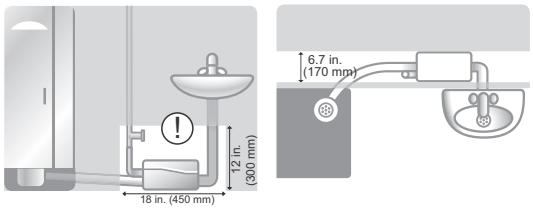

TM06 4209 1715

Fig. 42 Measurements to be observed

When the unit is located inside a wall or in a floor unit, observe the minimum measurements to ensure that the unit can be inspected and is accessible for service.

Connections

The turnable discharge adapter incorporates a check valve.

The discharge and inlet connections can be adapted to the following pipe diameters:

Connection	Outer - Ø of pipe				
Inch	**1.050"**	**1.315"**	**1.660"**	**1.9"**	**2.375"**
Nominal	**0.75" (3/4")**	**1"**	**1.25" (1 1/4")**	**1.5" (1 1/2")**	**2"**
Flexible discharge elbow	●	●	●	-	-
Possible inlet (side)	-	-	●	●	-

Product numbers

Product	Plug	Sales region	Prod. no.
Sololift2 D-2	90 ° angle plug	North America	98824618

Technical data

Mechanical data

Net weight	9.5 lb (4.3 kg)
Tank volume	0.5 gal. (2.0 liters)
Flexible discharge elbow	∅0.75 in. / 1 in.
Dimensions of possible inlet	Side ∅1.25 in. / 1.5 in.
Start and stop levels	Start level: 2.3 in. (58 mm) above floor level Stop level: 1.4 in. (35 mm) above floor level
pH value of the pumped liquid	4-10
Maximum liquid temperature	122 °F (50 °C)
Ambient temperature	41 °F to 95 °F (5 °C to 35 °C)
Noise level	< 70 dB(A)
Duty class	S3-50 % - 1 min. (30 sec. on; 30 sec. off)

Electrical data

Supply voltage	115 V, 60 Hz
Power consumption, P1	Max. 320 W
Rated current	3.0 A
Power factor, cos φ	0.90 / 0.95
Speed	3450 rpm
Enclosure class	IP44
Insulation class	F
Power supply cable	Length 4.9 ft (1.5 m) 90 ° angle plug (115 V)

Performance

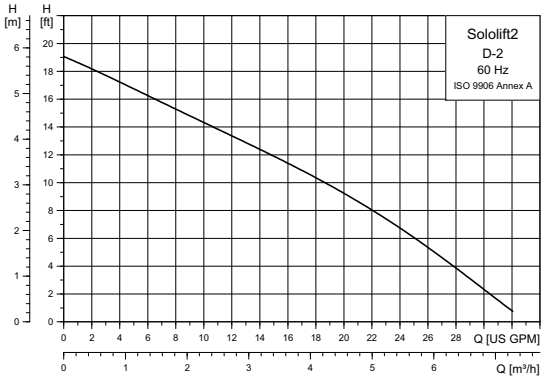

TM06 4198 1615

Fig. 43 Performance curve, Sololift2 D-2

Dimensions

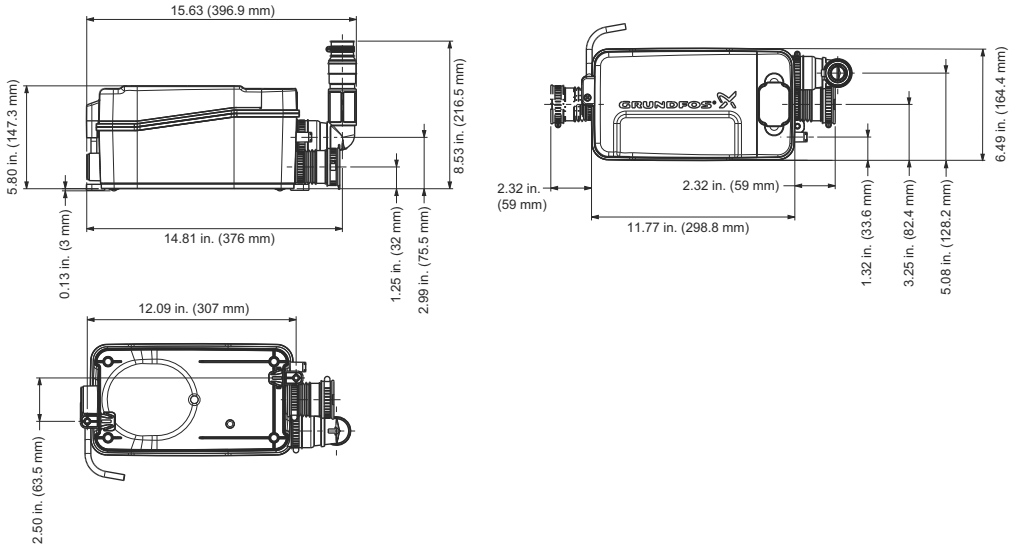

TM06 4224 1715

Fig. 44 Dimensional drawings, Sololift2 D-2

7. Product range, overview

Product numbers

Overview of available products:

Product	Power supply	Plug	Sales region	Flexible discharge elbow	Cable length	Net weight	Product number
Sololift2 WC-1	115 V, 60 Hz	90 ° angle plug (115 V)	North America	∅0.75 in. / 1 in. / 1.25 in.	Length 4.9 ft (1.5 m)	16.1 lb (7.3 kg)	98824611
Sololift2 WC-3						16.1 lb (7.3 kg)	98824613
Sololift2 CWC-3						15.65 lb (7.1 kg)	98824615
Sololift2 C-3						14.5 lb (6.6 kg)	98824620
Sololift2 D-2						9.50 lb (4.3 kg)	98824618

Accessories

Product	Description	Applicable to	Product number
Alarm device	Acoustic alarm in case of malfunction. Printed-circuit board to be pushed into an internal slot.	Sololift2 WC-1 Sololift2 WC-3 Sololift2 CWC-3	97772315
Replacement hose	Flexible PVC hose with two clamps and an adapter for the discharge of Sololift2. • Length: 19.68 in. (500 mm). • Inner diameter: ∅1.26 in. (32 mm). • Outer diameter: ∅1.50 in. (38 mm).	Sololift2 WC-1 Sololift2 WC-3 Sololift2 CWC-3 Sololift2 C-3	97772316
Drain hose	Flexible PVC hose with two clamps and a plug. Applicable when the Sololift2 tank is to be drained for service. • Length: 19.68 in. (500 mm). • Inner diameter: ∅0.48 in. (12 mm). • Outer diameter: ∅0.57 in. (14.4 mm)	Sololift2 WC-1 Sololift2 WC-3	97789093
Extension pipe	Connecting a Sololift2 placed at a distance from the toilet, e.g. when the unit shall be placed behind a wall or when it is difficult to connect the Sololift2 direct behind the toilet at ceramic frames around the toilet connection piece. • Length: 19.68 in. (500 mm).	Sololift2 WC1 Sololift2 WC-3	97772316

Technical data

Product	Rated current	Power (P1)	Cos φ	Enclosure class	Insulation class	Speed	Motor protection	Power supply cable
	[A]	[W]				[rpm]		
Sololift2 WC-1	6.8	750	0.87 / 0.92	IP44	F	3450	Built-in thermal switch	Length 4.9 ft (1.5 m) 90 ° angle plug (115 V)
Sololift2 WC-3								
Sololift2 CWC-3	6.8	750	0.87 / 0.92					
Sololift2 C-3	6.0	650	0.66 / 0.90					
Sololift2 D-2	3.0	320	0.90 / 0.95					

Scope of delivery

Overview of the included fittings:

Product		Fittings included on delivery
Sololift2 WC-1		TM05 0866 1711 • Discharge (OUT): • 1 x 90 ° elbow (1.25" or 1") • 2 x clamps for elbow • 1 x blind plug to close non used vertical or horizontal discharge • 1 x check valve • 1 x adapter for check valve • Inlet (IN): • 1 x flexible inlet connection rubber (1.25" or 1.5") • 1 x Elbow for venting over roof (1.25" or 1.5") • 4 x clamps for flexible conn. and elbow • 2 x wall plug • 2 x screws • 2 x floor fixation clips • 1 x clamp for toilet connection rubber
Sololift2 WC-3		TM04 9729 5010 • Discharge (OUT): • 1 x 90 ° elbow (1.25" or 1") • 2 x clamps for elbow • 1 x blind plug to close non used vertical or horizontal discharge • 1 x check valve • 1 x adapter for check valve • Inlet (IN): • 1 x flexible inlet connection rubber (1.25" or 1.5") • 2 x flexible inlet connection rubber (1.5" or 2") • 1 x Elbow for venting over roof (1.25" or 1.5") • 6 x clamps for flexible conn. and elbow (1.25" or 1.5") • 2 x clamps for flexible conn. (1.25" to 2") • 2 x wall plug • 2 x screws • 2 x floor fixation clips • 1 x clamp for toilet connection rubber
Sololift2 CWC-3		TM04 9730 5010 • Discharge (OUT): • 1 x 90 ° elbow (1.25" or 1") • 2 x clamps for elbow • 1 x blind plug to close non used vertical or horizontal discharge • 1 x check valve • 1 x adapter for check valve • Inlet (IN): • 1 x flexible inlet connection rubber (1.25" or 1.5") • 2 x flexible inlet connection rubber (1.5" or 2") • 1 x Elbow for venting over roof (1.25" or 1.5") • 6 x clamps for flexible conn. and elbow (1.25" or 1.5") • 2 x clamps for flexible conn. (1.25" to 2") • 2 x wall plug • 2 x screws • 2 x floor fixation clips • 1 x clamp for toilet connection rubber
Sololift2 C-3		TM04 9731 5010 • Discharge (OUT): • 1 x 90 ° elbow (1.25" or 1") • 2 x clamps for elbow • 1 x blind plug to close non used vertical or horizontal discharge • 1 x cover for blind plug • 1 x check valve • Inlet (IN): • 1 x flexible inlet connection rubber (1.25" or 1.5") • 2 x flexible inlet connection rubber (1.5" or 2") • 4 x clamps for flexible conn. and elbow (1.25" or 1.5") • 2 x clamps for flexible conn. (1.25" to 2") • 1 x Hose nozzle adapter to connect a washing machine • 1 x clamp for hose nozzle • 2 x wall plug • 2 x screws • 2 x floor fixation clips
Sololift2 D-2		TM04 9732 5011 • Discharge (OUT): • 1 x 90 ° elbow (0.75" or 1") • 2 x clamps for elbow • 1 x check valve • Inlet (IN): • 2 x flexible inlet connection rubber (1.25" or 1.5") • 4 x clamps for flexible conn. and elbow (1.25" or 1.5") • 2 x wall plug • 2 x screws • 2 x floor fixation clips

8. Further product documentation

Online search and sizing tool to help you make the right choice.

http://product-selection.grundfos.com

SIZING enables you to size a pump based on entered data and selection choices.

REPLACEMENT enables you to find a replacement product.
Search results will include information on

- the lowest purchase price
- the lowest energy consumption
- the lowest total life cycle cost.

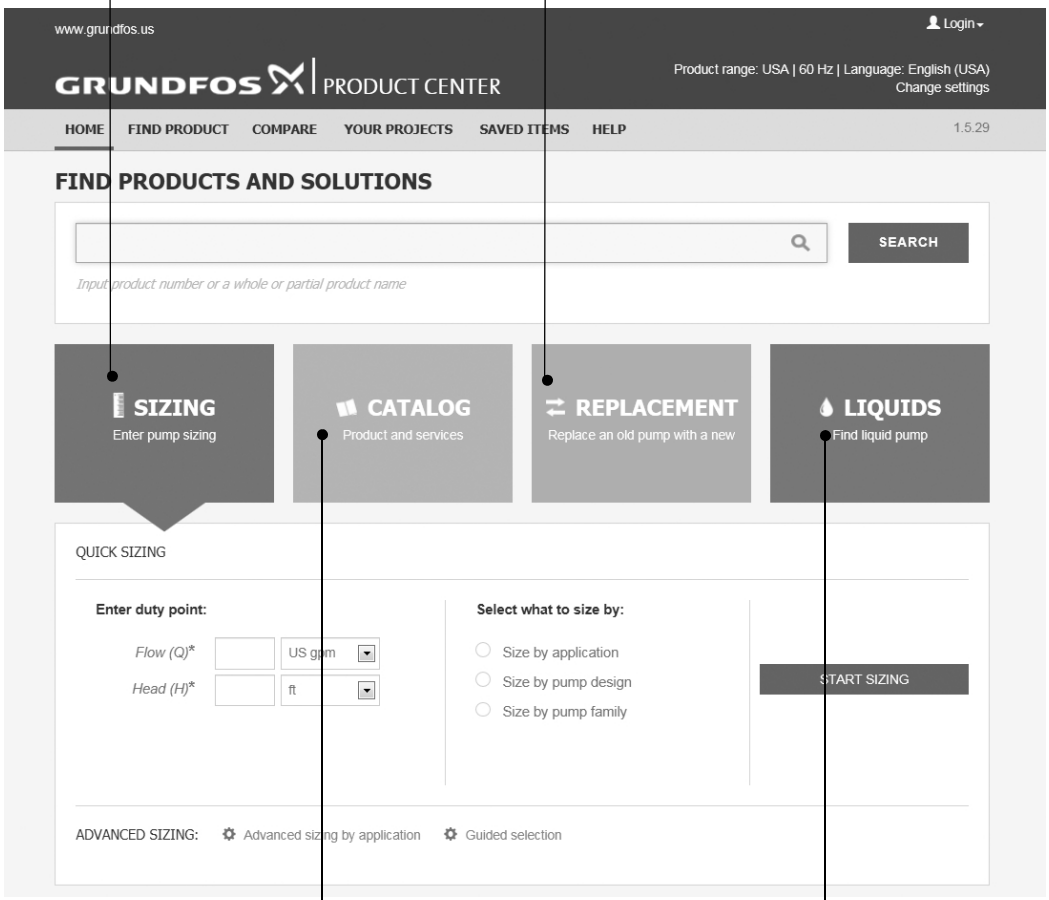

CATALOG gives you access to the Grundfos product catalog.

LIQUIDS enables you to find pumps designed for aggressive, flammable or other special liquids.

All the information you need in one place

Performance curves, technical specifications, pictures, dimensional drawings, motor curves, wiring diagrams, spare parts, service kits, 3D drawings, documents, system parts. The Product Center displays any recent and saved items - including complete projects - right on the main page.

Downloads

On the product pages, you can download installation and Operating Instructions, data booklets, service instructions, etc. in PDF format.

Grundfos GO

Mobile solution for professionals on the GO!

Grundfos GO is the mobile tool box for professional users on the go. It is the most comprehensive platform for mobile pump control and pump selection including sizing, replacement and documentation. It offers intuitive, handheld assistance and access to Grundfos online tools, and it saves valuable time for reporting and data collection.

GET IT ON Google play

Available on the App Store

be think innovate

98853176 0715

ECM: 1151867

Grundfos Kansas City
17100 West 118th Terrace
Olathe, Kansas 66061
Phone: 913-227-3400
Fax: 913-227-3500
www.grundfos.us

Grundfos Canada
2941 Brighton Road
Oakville, Ontario L6H 6C9 Canada
Phone: +1-905-829-9533
Fax: +1-905-829-9512
www.grundfos.ca

Grundfos México
Boulevard TLC No. 15
Parque Industrial Stiva Aeropuerto
C.P. 66600 Apodaca, N.L. Mexico
Phone: 011-52-81-8144 4000
Fax: 011-52-81-8144 4010
www.grundfos.mx

© Copyright Grundfos Holding A/S

The name Grundfos, the Grundfos logo, and **be think innovate** are registered trademarks owned by Grundfos Holding A/S or Grundfos A/S, Denmark. All rights reserved worldwide.

GRUNDFOS